TI01431C/07/EN/01.19
71465985
2019-12-02

Technical Information
Memosens Wave CKI50

Process spectrometer for the measurement of color

Application

The process spectrometer is used to detect color using VIS spectroscopy. The device can measure and determine color, color variations or the accuracy of the color in liquids.

Your benefits

- Integrated data models and methods
- Simple process integration with the process connection
- Optimum adaptation to process conditions, even in hygienic environments
- In-line measurements in real time
- Robust version for industrial use

Endress+Hauser
People for Process Automation

Function and system design

Measuring principle

The process spectrometer uses optical signals to analyze the medium. Information regarding the medium can therefore be output as measurement parameters. These measurement parameters can be displayed via the transmitter and are used to monitor or directly control a process. The process spectrometer measures the portion of the sample that is located in the measurement gap of the measuring head. The sample is illuminated with light and an interaction takes place between the sample and the introduced light. The transmitted light is collected again via the observation window and analyzed in the electronics unit. The spectrum of the collected light is then analyzed and the corresponding measurement parameter is calculated.

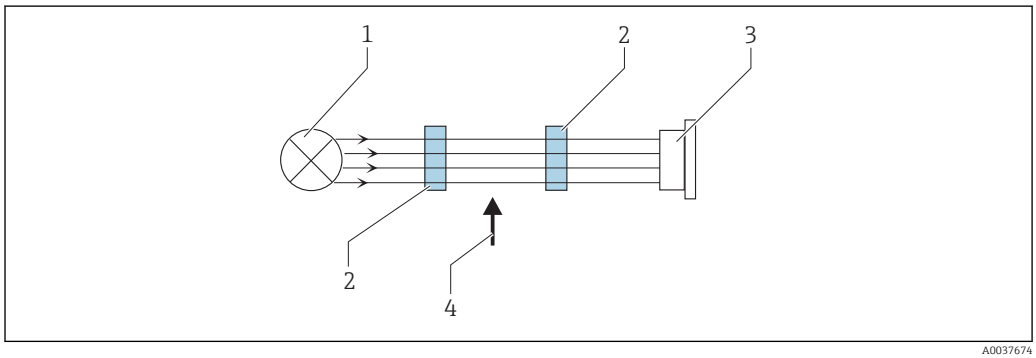

1 Absorption measurement

1 Light source
2 Optical windows
3 Detector
4 Direction of medium flow

A light source sends a beam of light through the medium via the optical windows. The incident light beam is measured on the detector side → 1, 2.

Light absorption

The measuring principle is based on the Lambert-Beer law.

There is a linear dependency between the absorption of light and the concentration of the absorbing substance:

$A = -\log_{10} (I/I_0) = \varepsilon \cdot c \cdot OPL$

A ... Absorption

I ... Intensity of received light at detector

I_0 ... Intensity of transmitted light of light source

ε ... Extinction coefficient

c ... Concentration

OPL ... Optical path length

Measuring system

The complete measuring system comprises the following at least:
- Process spectrometer CKI50
- Liquiline CM44P transmitter
- Process connection Varivent N DN50 - 125 immersion depth 68 mm (2.7 in) (included in the delivery)

Pay attention to the specifications for the process connection Varivent N DN50 - 125.

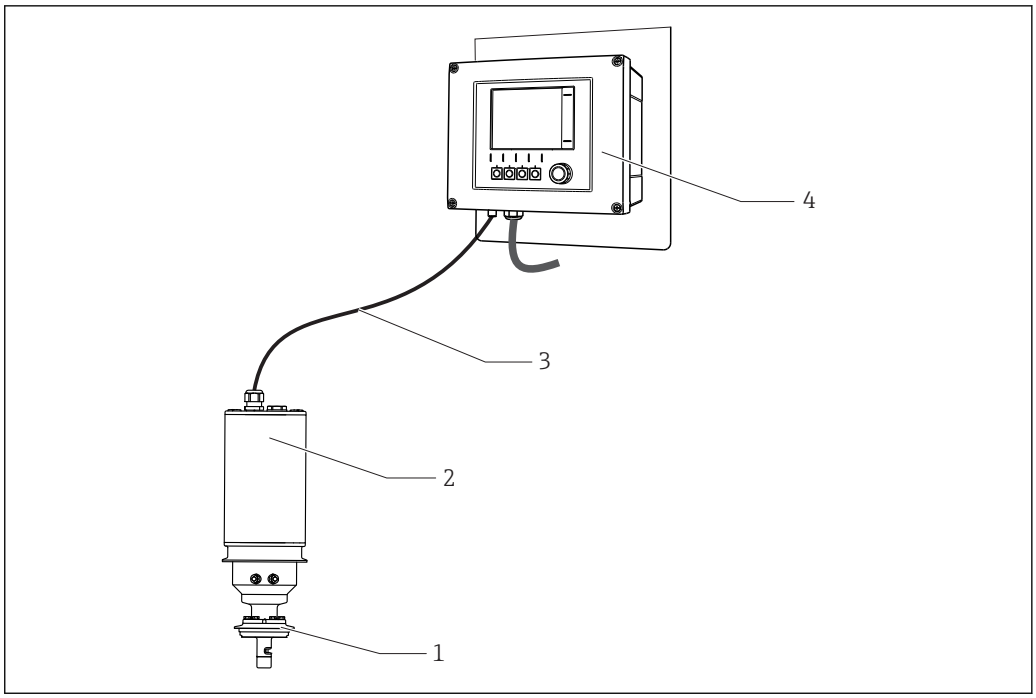

2 Example of a measuring system with a process spectrometer

1 Process connection
2 Process spectrometer CKI50
3 Fixed cable (15 m (49.2 ft))
4 Liquiline CM44P transmitter

Communication and data processing

Communication with the transmitter

Always connect digital sensors with Memosens technology to a transmitter with Memosens technology.

Data transmission to a transmitter for analog sensors is not possible.

Digital sensors can store measuring system data in the sensor. These include the following:
- Manufacturer data
  - Serial number
  - Order code
  - Date of manufacture
- Calibration data
  - Calibration date
  - Number of calibrations
  - Serial number of the transmitter used to perform the last calibration
- Operating data
  - Temperature application range
  - Date of initial commissioning

Dependability

Maintainability

Easy handling
Sensors with Memosens technology have integrated electronics that store calibration data and other information (e.g. total hours of operation or operating hours under extreme measuring conditions). Once the sensor has been connected, the sensor data are transferred automatically to the transmitter

and used to calculate the current measured value. As the calibration data are stored in the sensor, the sensor can be calibrated and adjusted independently of the measuring point. The result:
- Easy calibration in the measuring lab under optimum external conditions increases the quality of the calibration.
- Pre-calibrated sensors can be replaced quickly and easily, resulting in a dramatic increase in the availability of the measuring point.
- Thanks to the availability of the sensor data, maintenance intervals can be accurately defined and predictive maintenance is possible.
- The sensor history can be documented on external data carriers and in evaluation programs.
- Thus, the current application of the sensors can be made to depend on their previous history.

Integrity

Data security thanks to digital data transmission
Memosens technology digitizes the measured values in the sensor and transmits the data to the transmitter via a non-contact connection that is free from potential interference. The result:
- Automatic error message if sensor fails or connection between sensor and transmitter is interrupted
- Immediate error detection increases measuring point availability

Input

Measured variable

CIE L*a*b* [1], observer 2°, illuminant D65, as per DIN EN ISO 11664-4

CIE L*a*b* is a device-independent color space consisting of 3 color values:
- L* lightness axis
  Specified operational range: 0 to 100
- a* green-red axis
  Specified operational range: −150 to 100
- b* yellow-blue axis
  Specified operational range: −100 to 150

Measuring range

Application	Specified operational range
Halogen wavelength range	380 to 830 nm
CIE L*a*b*	L* = 0 to 100 a* = -150 to 100 b* = -100 to 150

Power supply

Electrical connection

⚠ WARNING

Device is live!
Incorrect connection may result in injury or death!
- ▶ The electrical connection may be performed only by an electrical technician.
- ▶ The electrical technician must have read and understood these Operating Instructions and must follow the instructions contained therein.
- ▶ **Prior** to commencing connection work, ensure that no voltage is present on any cable.

Connecting the device

The following connection options are available:
Via the cable of the process spectrometer to the plug-in terminals of an input on the transmitter (version: fixed cable, end sleeves)

1) L*a*b* color model defined by the International Commission of Illumination

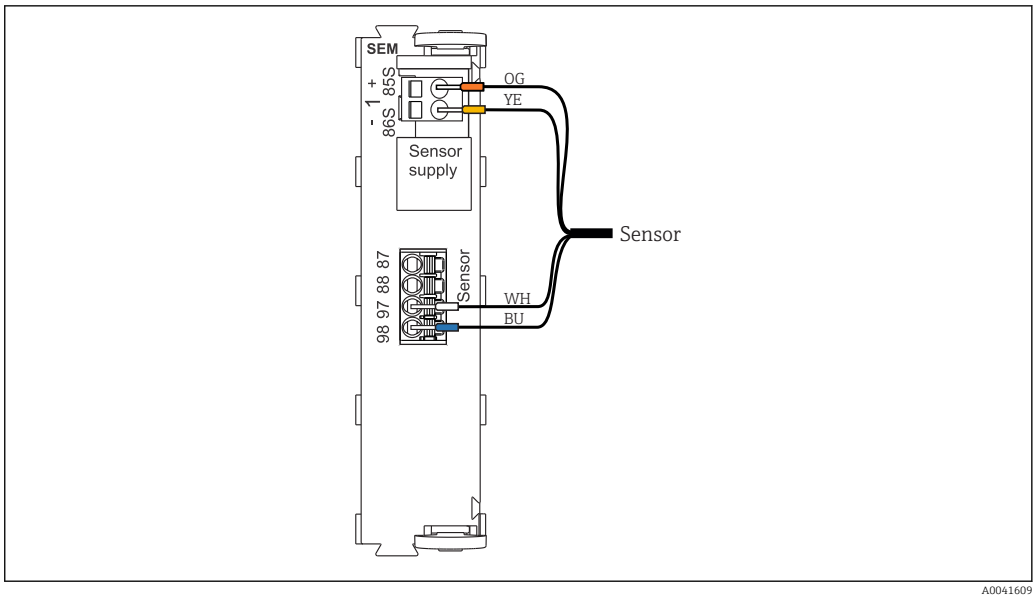

3 *Connection of the process spectrometer to the input*

The cable length is 15 m (49.2 ft).

Connecting the cable shield

If possible, only use terminated original cables. The cables of the process spectrometer must be shielded cables.

1. Release a suitable cable gland on the bottom of the housing and remove the dummy plug.
2. Making sure the gland is facing the right direction, thread the gland onto the cable end and pull the cable through the entry and into the housing.
3. Route the cable in the housing in such a way that the **exposed** cable shield fits into one of the cable clamps and the cable cores can be easily routed as far as the connection plug on the electronics module.
4. Unscrew the cable clamp.
5. Clamp the cable.
6. Then tighten the screw of the cable clamp again.
7. Connect cable cores as per the wiring diagram.
8. Tighten the cable gland from outside.

Performance characteristics

Reference operating conditions

25 °C (77 °F), 1013 hPa (15 psi), heat-up time 5 hours

Long-term reliability

Drift per 24h

	Specified operational range	Drift per 24h
L*	0 to 100	< 0.03 % of the span of the specified operational range [1]
a*	-150 to 100	
b*	-100 to 150	

1) Measured according to DIN ISO 15839 with liquid color solutions in the range L* from 60 to 100, a* from -47 to 85; b* from -44 to 98

Regular referencing ensures the drift is largely compensated.

Repeatability

Repeatability

	Specified operational range	Repeatability
L*	0 to 100	< 0.1 % of the span of the specified operational range [1]
a*	-150 to 100	
b*	-100 to 150	

1) Measured according to DIN ISO 15839 with liquid color solutions in the range L* from 60 to 100, a* from -47 to 85; b* from -44 to 98

Installation

Orientation

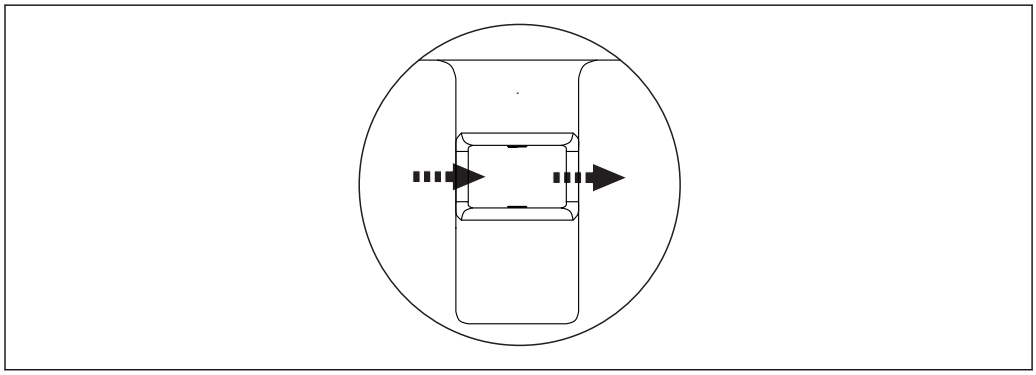

A0037673

4 Flow direction of the medium (arrows)

- Align the device in such a way that the medium flows through the measurement gap.

To align the process spectrometer, pay attention to the orientation of the device and the installation marking on the process connection

Orientation in pipes

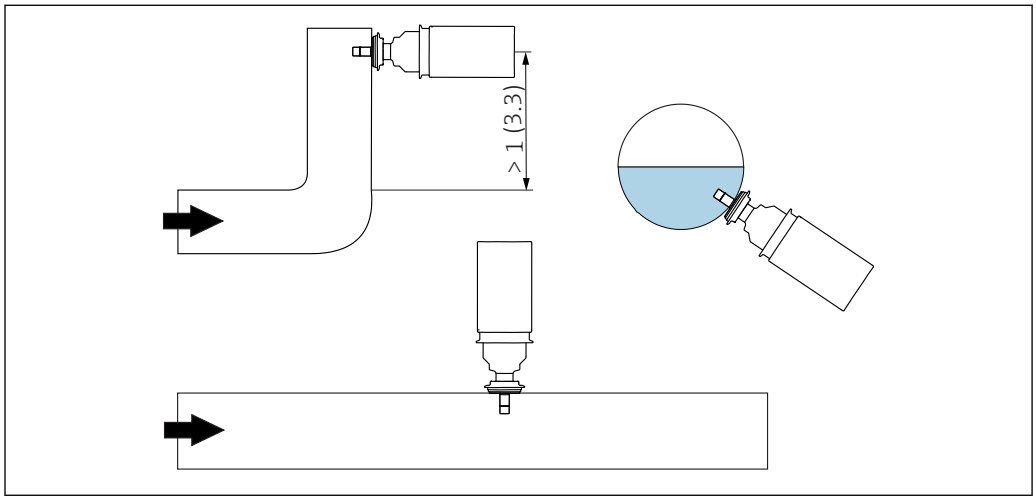

A0041393

5 Orientation of process spectrometer and flow direction (arrows). Engineering unit: m (ft)

Changes in the flow direction after pipe bends can cause turbulence in the medium.

The distance between the process spectrometer and a pipe bend must be at least 1 m (3.28 ft).

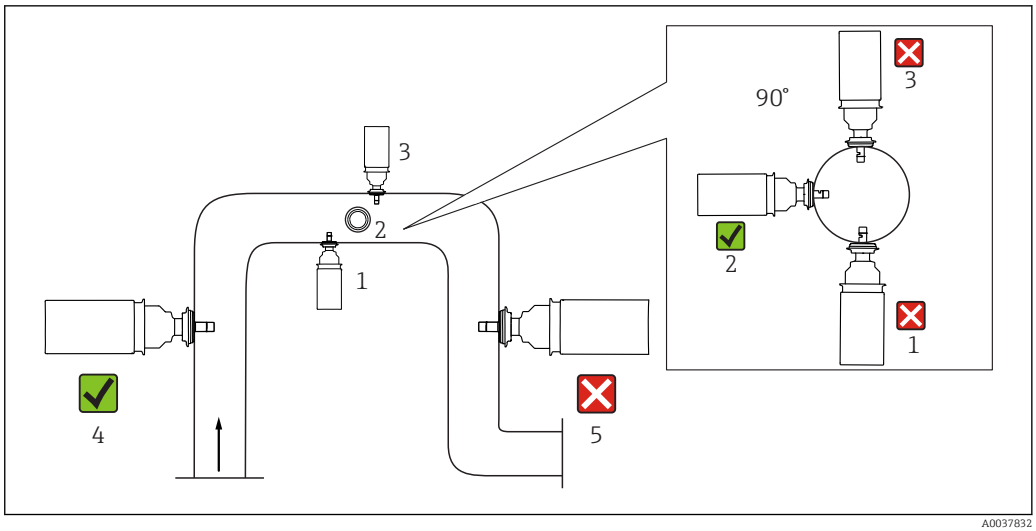

6 *Permitted and forbidden orientations in a pipe*

The best installation location is in the ascending pipe (item 4).

Installation marking

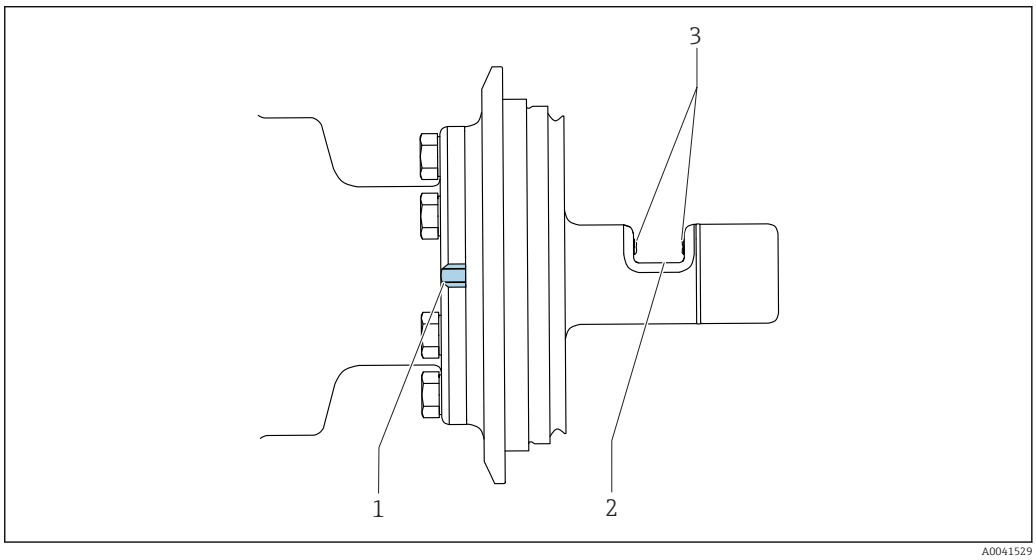

7 *Installation marking for alignment*

1 *Installation marking*
2 *Measurement gap*
3 *Optical windows*

The installation markings are parallel to the optical windows. The installation markings are located on both sides of the process connection.

- Using the installation marking, align the process spectrometer against the flow direction.

Installation instructions

WARNING

Escaping process medium

Risk of injury from high pressure, high temperatures or chemical hazards!

- Only mount the device if the pipes are empty and unpressurized.
- Wear protective gloves, protective goggles and protective clothing.

WARNING

Device not securely fitted

Risk of injury from falling device parts!

▶ Fasten and secure the device sufficiently.

- Choose a mounting location that can be easily accessed at a later stage. Installation in a bypass is particularly suitable for this.
- Install the process spectrometer upstream from the pressure regulators. The operation of the device under pressure helps prevent the formation of air or gas bubbles.
- Install the process spectrometer in places with uniform flow conditions.
- Install the process spectrometer in places with minimum vibration.
- Do not install the process spectrometer in places where air may collect and foam bubbles form or where suspended particles may settle.
- Align the process spectrometer so that the measurement gap is rinsed by the flow of medium.
- Install the process spectrometer in such a way that it can be cleaned inline.

Environment

Ambient temperature range	−20 to 45 °C (−4 to 113 °F) The temperature displayed can deviate significantly from the temperature of the medium due to the ambient conditions and the internal heating of the process spectrometer.
Storage temperature	−20 to 70 °C (−4 to 158 °F)
Degree of protection	▪ IP 69 ▪ NEMA 6P (1.8 m (5.9 ft) water column over 24 hours, 1 mol/l KCl)
Electromagnetic compatibility (EMC)	Interference emission and interference immunity as per ▪ EN 61326-1:2013 ▪ EN 61326-2-3:2013 ▪ NAMUR NE21: 2012

Process

Process temperature range	−20 to 60 °C (−4 to 140 °F) 60 to 140 °C (140 to 284 °F) with water cooling The process spectrometer must be cooled depending on the duration of operation and the ambient temperature → 9. **NOTICE** **The process spectrometer can be permanently damaged at process temperatures of 60 °C (140 °F) and higher without cooling!** ▶ Ensure the device is sufficiently cooled at process temperatures of 60 °C (140 °F) and higher.
Process pressure range	0.5 to 10 bar (7.3 to 145 psi) (absolute)
Flow limit	**Minimum flow** No minimum flow required. For media that have a tendency to form deposits, ensure that the medium is mixed sufficiently.

Thermal insulation

Water cooling

Recommended flow	10 l/h (2.64 gal/h)
Recommended inlet temperature	20 °C (68 °F)
Pressure	Maximum 2 bar (29 psi)
Connection	Male thread M6
Coolant	Water

The use of any coolant other than water is not recommended.

Mechanical construction

Design, dimensions

Measurement gap with 3 different gap widths:
- 2 mm (0.08 in)
- 5 mm (0.2 in)
- 10 mm (0.4 in)

Dimensions

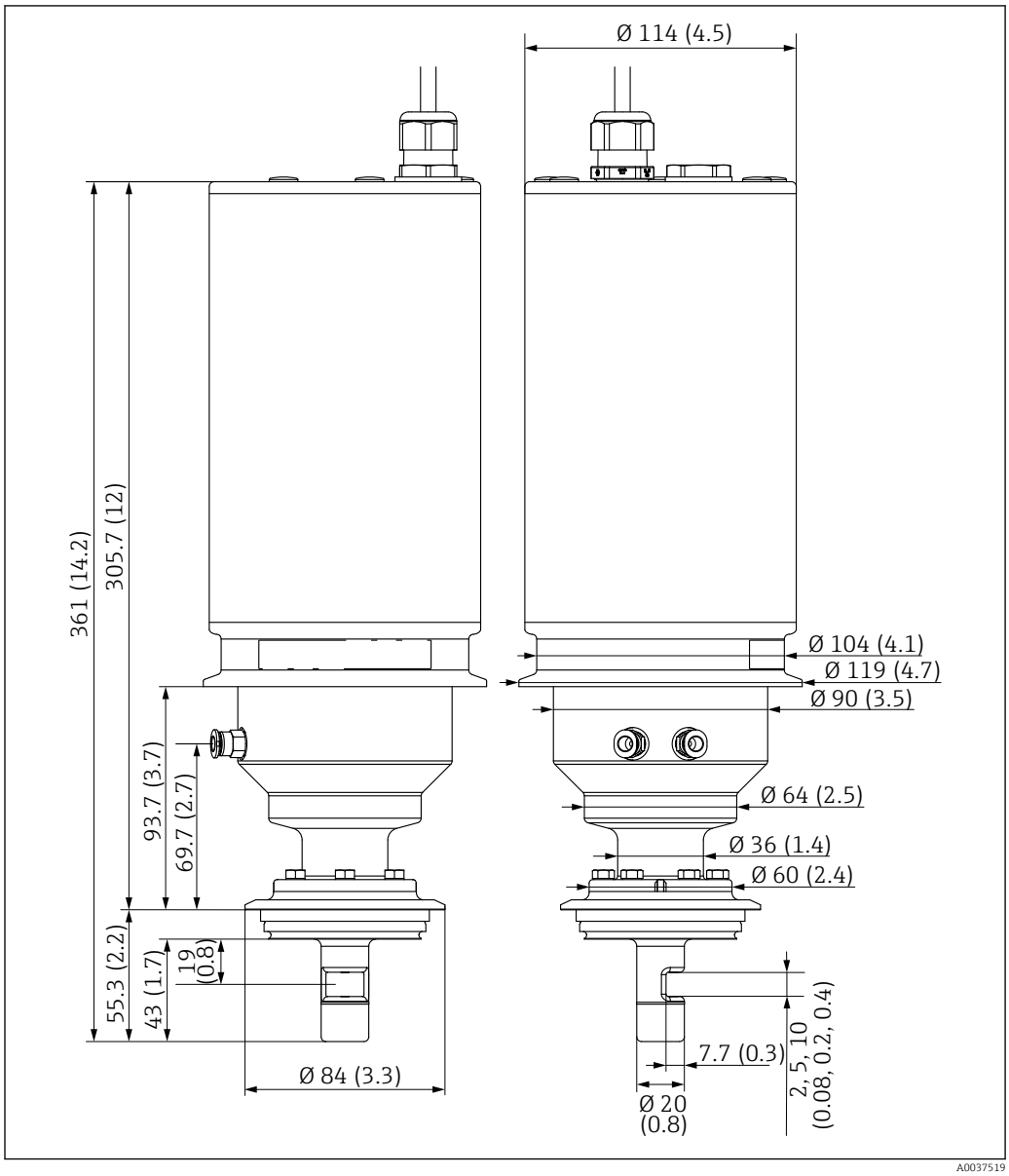

8 Dimensions of CKI50. Dimensions: mm (in)

Weight

With a cable length of 15 m (49.2 ft) with clamp:
7.9 kg (17.4 lb)

Materials

Materials in contact with the medium

Measuring head:	1.4404/AISI316L
Window:	Sapphire
O-rings:	FFKM
Gasket seal:	PEEK

Materials not in contact with the medium

Housing:	1.4404/AISI316L

Process connections

Varivent N DN50 - 125 immersion depth 68 mm (2.7 in)

Certificates and approvals

CE mark

The product meets the requirements of the harmonized European standards. As such, it complies with the legal specifications of the EU directives. The manufacturer confirms successful testing of the product by affixing to it the CE mark.

ADI-free

No materials or ingredients derived from animals are used during the entire production of all the parts in contact with the process.

Hygienic compatibility

FDA

All materials in contact with the product are listed with the FDA.

EHEDG

Certified cleanability according to EHEDG Type EL Class 1.

When using in hygienic applications, please note that the cleanability of a sensor also depends on the way the sensor is installed. For installation in a pipe, use the EHEDG-certified flow vessels that are suitable for the particular process connection.

Ordering information

Product Configurator

On the product page there is a **Configure** button to the right of the product image.

1. Click this button.
   ↳ The Configurator opens in a separate window.
2. Select all the options to configure the device in line with your requirements.
   ↳ In this way, you receive a valid and complete order code for the device.
3. Export the order code as a PDF or Excel file. To do so, click the appropriate button on the right above the selection window.

For many products you also have the option of downloading CAD or 2D drawings of the selected product version. Click the **CAD** tab for this and select the desired file type using picklists.

Scope of delivery

The delivery comprises:
- 1 process spectrometer, version as ordered
- 1 set of Operating Instructions

www.addresses.endress.com

Endress+Hauser

People for Process Automation