ZD116F-C/00/en/02.08
CCS/FM6.0
CSA/C 31.07.07

71069664

CSA Control Drawing
960409-2178 C

Levelflex M
FMP4x
(T12 – OVP / IS – HART)

Endress+Hauser

People for Process Automation

HAZARDOUS LOCATION

Class I, DIV. 1, GROUPS A, B, C, D
Ex ia IIC Tx
Class II, DIV. 1, GROUP G + Coal Dust
Class III

T12-OVP housing:
IS / I, II, III / 1 / A, B, C, D, G + Coal Dust

NON HAZARDOUS LOCATION

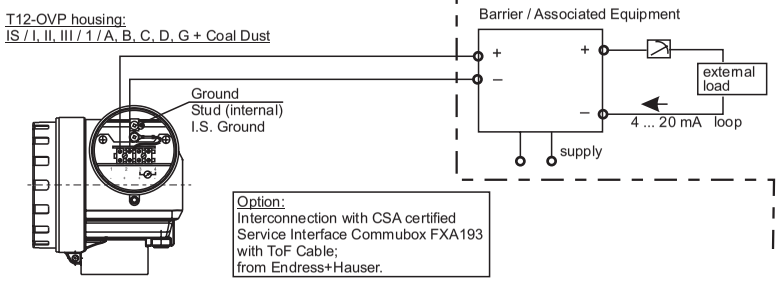

FMP40 standard probes

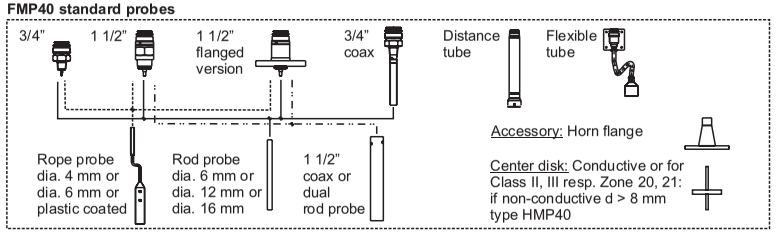

FMP45 high temperature/high pressure probes

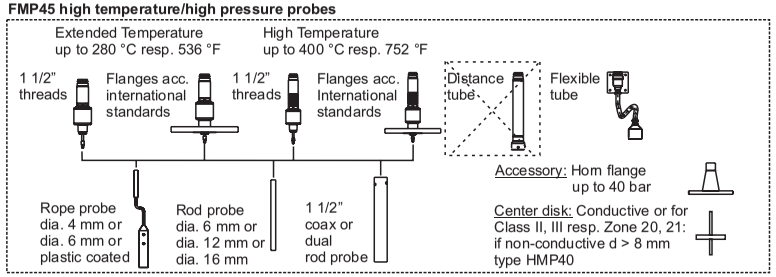

FMP43 hygienic

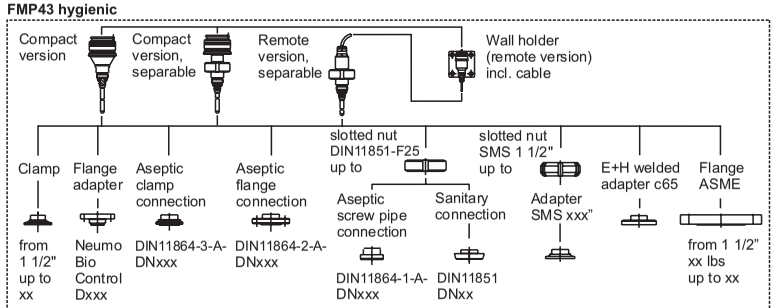

Note: Shown types are standard types others are possible.

Area of application:
The compact instruments are suitable for use in areas subject to explosion caused by gases, vapours or mists.

Permissible ambient temperature:

Electronic:	T12-OVP enclosure (with integrated surge protection)	–40...+80 °C
Probes:	FMP40, FMP45 or FMP43	refer Technical Information

Notes: INTRINSICALLY SAFE (Ex ia), CLASS I, DIV. 1, GROUPS A, B, C, D or Ex ia IIC HAZARDOUS LOCATION INSTALLATION

DIVISION 1 INSTALLATION

1. Control room equipment may not use or generate over 250 Vrms.
2. Install per the Canadian Electrical Code.
3. Warning: Substitution of components may impair intrinsic safety.
4. Ex ia IS defined as intrinsically safe.
5. For entity installation use CSA certified safety barrier or other associated equipment that satisfy the following conditions: Uo/Voc ≤ Ui/Vmax, Io/Isc ≤ Ii/Imax, Co/Ca ≥ Ci + Ccable, Lo/La ≥ Li + Lcable

Ui/Vmax. (V)	Ii/Imax. (mA)	Pi/Pmax. (W)	Ci (nF)	Li (µH)
30	273	1.0	≤ 13	negligible

6. For system installation use: CSA certified safety barriers as follows: (a) 28 V / 300 Ω + Ground or
   (b) 28 V / 300 Ω + 28 V / Diode or
   (c) 28 V / 300 Ω + 10 V / 50 Ω
7. Use supply wires suitable for 5 K above surrounding ambient.
8. Install barrier/associated equipment in accordance with manufacturer's instruction.
9. Probes made out of special materials like Alloy C22 marked as FMP40-.1..... or FMP40-.2..... should be used only in liquids or lightweight solids (e.g. plastic granulate, fly-ash, ...). Maximum permissible tensile force at the rope or rod 2000 N.
10. The surge protection device (OVP) fulfills the requirements of IEC 60079-14 clause 12.3. FMP43 with remote cable may have special investigations concerning protection against atmospheric electricity dependand on local situation.
11. For service only: Use specific cables, supplied with the Service Interface Commubox FXA193. Refer to the applicable Control Drawing.
12. FMP43 with separable probe in separated mode shall be closed by protective cover.

CLASS I, DIV. 2, GROUPS A, B, C, D or Ex nC IIC AND DIP. FOR CLASS II AND III, DIV. 1, GROUP G and Coal Dust HAZARDOUS LOCATION INSTALLATION

1. Depending on Location install per Canadian Electrical Code (CEC) using wiring methods described in Rule 18-156 or Rule 18-202 or Rule 18-302. Intrinsic safety barrier not required max. supply voltage 30 V. For T-code see table.
2. Warning: Explosion Hazard - Do not disconnect equipment unless power has been switched off or the area is known to be non-hazardous.
   Warning: Explosion Hazard - Substitution of components may impair suitability for Class I, Div. 2.

For Class II and III; Div. 1:
Warning: Keep cover tight unless power has been switched off or the area is known to be non-hazardous.

Temperature class with/without display VU331	Permissible max. medium temperature at the probe (process connection) Tmed	Permissible maximum ambient temperature of the electronic compartment (Ta) (enclosure T12-OVP (integrated surge protection))						
		FMP40 with 3/4" probe, compact	**FMP40 with 3/4" probe, remote electronic with distance tube**	**FMP40 with 1 1/2" probe, compact**	**FMP40 with 1 1/2" probe, remote electronic with distance tube**	**FMP40 with remote electronic with flexible tube**	**FMP43 compact or compact separable**	**FMP43 separable, remote cable**
T6	+ 80 °C + 60 °C	+55 °C +60 °C	+55 °C +60 °C	+55 °C +60 °C	+55 °C +60 °C	+60 °C +60 °C	+55 °C +60 °C	+60 °C +60 °C
T5	+ 95 °C + 75 °C	+70 °C +75 °C	+70 °C +75 °C	+70 °C +75 °C	+70 °C +75 °C	+75 °C +75 °C	+70 °C +75 °C	+75 °C +75 °C
T4	+130 °C + 80 °C	+70 °C +80 °C	+75 °C +80 °C	+70 °C +80 °C	+75 °C +80 °C	+80 °C +80 °C	+70 °C +80 °C	+80 °C +80 °C
T3 (functional)*[1]	+150 °C + 80 °C	+65 °C +80 °C	+75 °C +80 °C	+70 °C +80 °C	+75 °C +80 °C	+80 °C +80 °C	+65 °C +80 °C	+80 °C +80 °C

Note: the applicable temperature of probe must be within their specified limits;
*[1] functional means max. permissible process temperature

Temperature class with/without display VU331	Permissible max. medium temperature at the probe (process connection) Tmed	Permissible max. ambient temperature of the electronic compartment (Ta) (enclosure T12-OVP (integrated surge protection))		
		FMP45 type A (XT version)	**FMP45 type B or C (HT version)**	**FMP45 with remote electronic with flexible tube**
T6	+ 80 °C + 60 °C	+58 °C +60 °C	+59 °C +60 °C	+60 °C +60 °C
T5	+ 95 °C + 75 °C	+73 °C +75 °C	+74 °C +75 °C	+75 °C +75 °C
T4	+130 °C + 80 °C	+76 °C +80 °C	+78 °C +80 °C	+80 °C +80 °C
T3 (functional)*[1]	+150 °C + 80 °C	+74 °C +80 °C	+74 °C +80 °C	+80 °C +80 °C
T3	+195 °C + 80 °C	+72 °C +80 °C	+75 °C +80 °C	+80 °C +80 °C
T2 (functional)*[1]	+250 °C + 80 °C	+68 °C +80 °C	+70 °C +80 °C	+80 °C +80 °C
T2 (functional)*[1]	+290 °C + 80 °C	280 °C: +66 °C +80 °C	+72 °C +80 °C	+80 °C +80 °C
T1 (functional)*[1]	+400 °C + 80 °C	not allowed	+67 °C +80 °C	+80 °C +80 °C

Note: the applicable temperature of probe must be within their specified limits;
*[1] functional means max. permissible process temperature