Level Pressure Flow Temperature Liquid Analysis Registration Systems Components Services Solutions

Safety Instructions

Proline Promass 80

Division 1
Ex documentation

Ex documentation for the Operating Instructions according to FACTORY MUTUAL standards → **Page 3**

Ex documentation for the Operating Instructions according to CANADIAN STANDARDS ASSOCIATION → **Page 17**

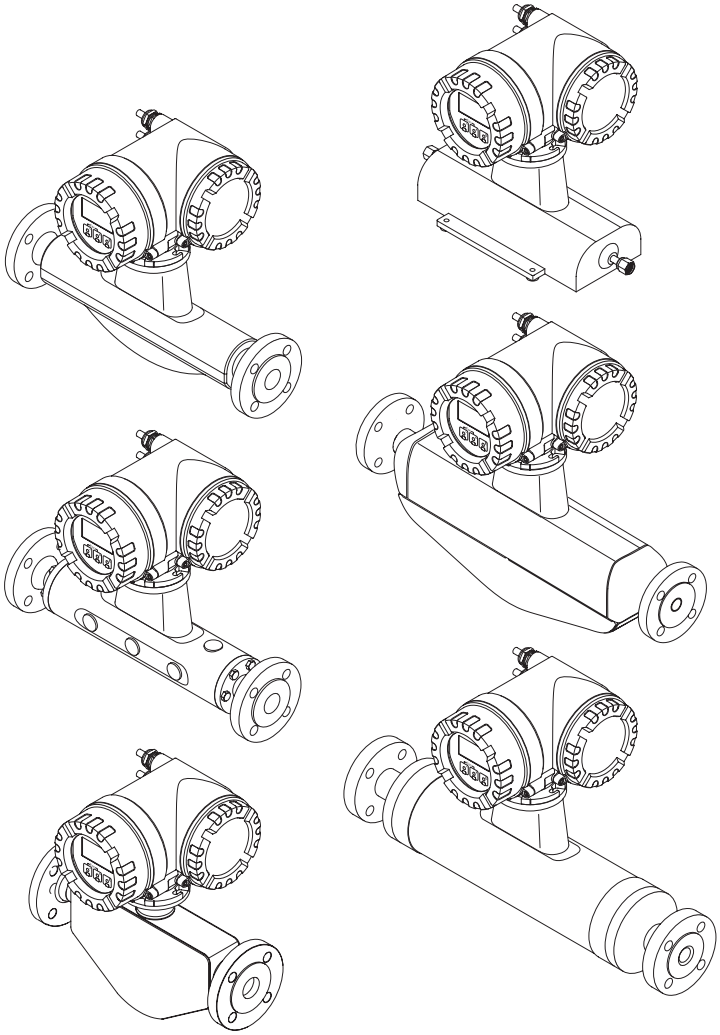

XA043D/06/en/01.05
Nr. 50098482

Endress+Hauser
People for Process Automation

Examples for markings according to FM and CSA:

Factory Mutual

Example: **XP / I / 1 / ABCD**

Type of Protection

XP	Explosionproof
IS	Intrinsically Safe Apparatus
AIS	Associated Apparatus with Intrinsically Safe Connections
ANI	Associated Nonincendive Field Wiring Apparatus
PX,PY,PZ	Pressurized
APX,APY,APZ	Associated Pressurization Systems/Components
NI	Nonincendive
DIP	Dust-Ignitionproof
S	Special Protection

Class

I	Class I (Gas)
II	Class II (Dust)
III	Class III (Fibre)

Division

1	Division 1
2	Division 2

Group

FM /NEC	Gases, vapours and dust examples	Min. ignition temperature [µJ]
A	Acetylene, carbon disulfide (Class I)	0.02
B	Hydrogen, ethyl nitrate (Class I)	0.02
C	Ethylene, isoprene (Class I)	0.06
D	Acetone, ethane, benzene, ethanoic acid, gasolines, diesel oil, aircraft fuel, methane, heating oil,crude oil, hexane, ether (Class I)	0.18
E	Metallic powder (Class II)	
F	Coal dust (Class II)	
G	Mill dust (Class II)	
	Textile fibres (Class III)	

Temperature Class

Maximum surface temperature		
T1	842 °F	450 °C
T2	572 °F	300 °C
T2A	536 °F	280 °C
T2B	500 °F	260 °C
T2C	446 °F	230 °C
T2D	419 °F	215 °C
T3	392 °F	200 °C
T3A	356 °F	180 °C
T3B	329 °F	165 °C
T3C	320 °F	160 °C
T4	275 °F	135 °C
T4A	248 °F	120 °C
T5	212 °F	100 °C
T6	185 °F	85 °C

Canadian Standards Association

Example: **Class I, Division 1, Group ABCD**

Class

I	Class I (Gas)
II	Class II (Dust)
III	Class III (Fibre)

Division

1	Division 1
2	Division 2

Group

CSC /NEC	Gases, vapours and dust examples	Min. ignition temperature [µJ]
A	Acetylene, carbon disulfide (Class I)	0.02
B	Hydrogen, ethyl nitrate (Class I)	0.02
C	Ethylene, isoprene (Class I)	0.06
D	Acetone, ethane, benzene (Class I)	0.18
E	Metallic powder (Class II)	
F	Coal dust (Class II)	
G	Mill dust (Class II)	
	Textile fibres (Class III)	

Type of Protection

Explosionproof
Intrinsically Safe Apparatus
Associated Apparatus with Intrinsically Safe Connections
Associated Nonincendive Field Wiring Apparatus
Pressurized
Associated Pressurization Systems/Components
Nonincendive
Dust-Ignitionproof
Special Protection

Temperature Class

Maximum surface temperature		
T1	450 °C	842 °F
T2	300 °C	572 °F
T2A	280 °C	536 °F
T2B	260 °C	500 °F
T2C	230 °C	446 °F
T2D	215 °C	419 °F
T3	200 °C	392 °F
T3A	180 °C	356 °F
T3B	165 °C	329 °F
T3C	160 °C	320 °F
T4	135 °C	275 °F
T4A	120 °C	248 °F
T5	100 °C	212 °F
T6	85 °C	185 °F

F-xxxxxxZZ-16-xx-xx-en-008

Level Pressure Flow Temperature Liquid Analysis Registration Systems Components Services Solutions

Safety Instructions

Proline Promass 80

Division 1

FM Ex documentation

This documentation is an integral part of the following Operating Instructions:
- BA057D, Operating Instruction, Proline Promass 80

Contents

Measuring system compact version 4
Measuring system remote version 5
Temperature tables compact version 6
Temperature tables sensor remote version 6
Approvals 7
Notified body 8
Special conditions 8
General warnings 8
Electrical connections 9
Connection of remote version connecting cable 12
Service adapter 12
Device fuse 12
Cable entries 12
Cable specifications 12
Technical data 13
Device identification 13
Control Drawings 14

XA043D/06/en/01.05
Nr. 50098482

Endress+Hauser
People for Process Automation

Measuring system compact version

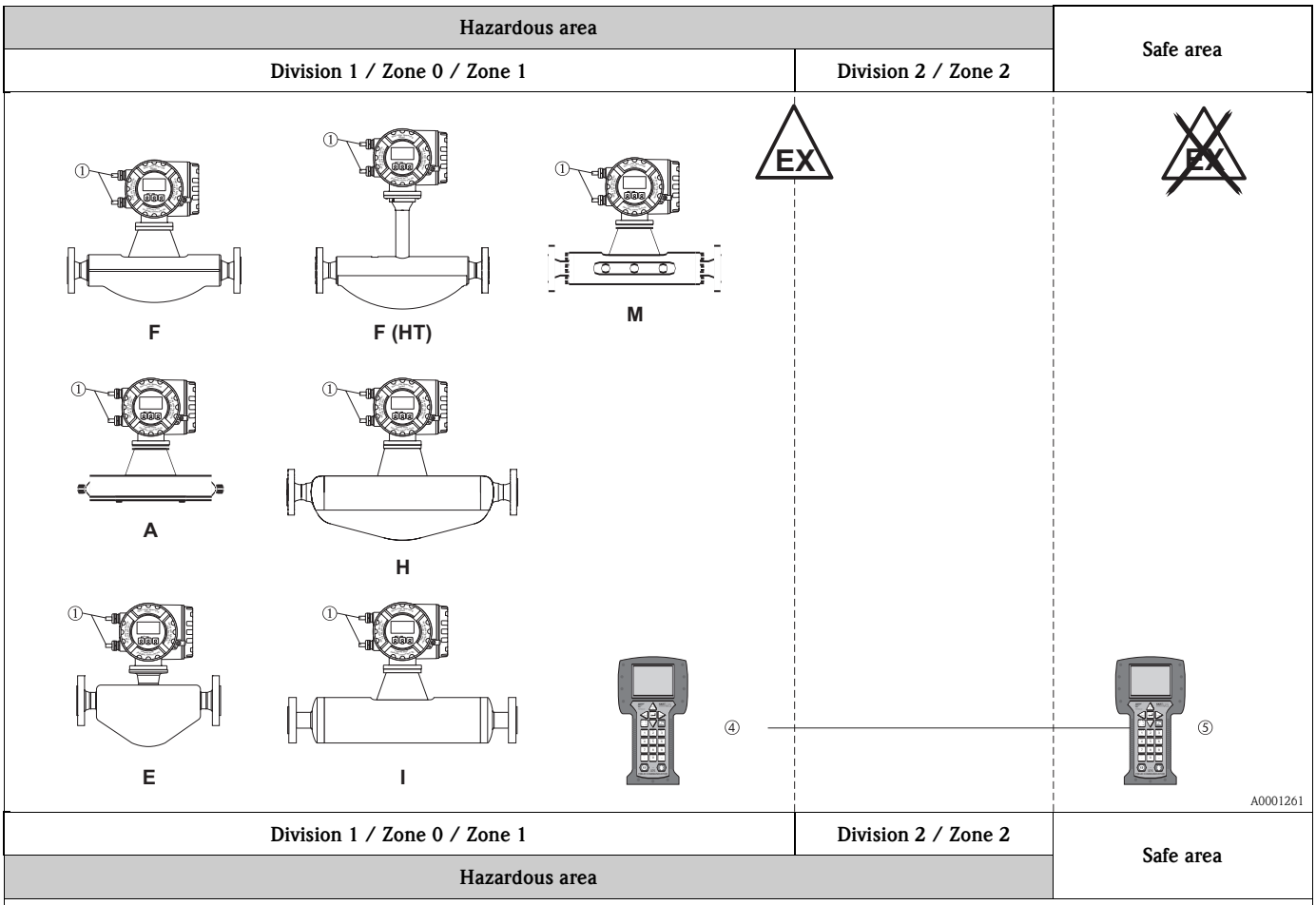

Transmitter Promass 80:

- Housing: explosionproof (use only cable entry 1/2" NPT) for use in Cl. I Div. 1 Groups ABCD or Cl. I Zone 1 Group IIC and Cl. II and III Div. 1 Groups EFG
  Electronics, associated apparatus:
  provides instrinsically safe sensor circuits
- Sensor: instrinsically safe
  Cl. I Div. 1 Groups ABCD or Cl. I Zone 1 Group IIC and Cl. II and III Div. 1 Groups EFG
  – Promass A; DN 1/24"...1/8"
  – Promass F; DN 3/8"...2"
  – Promass F; (HT) High temperature; DN 1", DN 2"
  – Promass I; DN 3/8"...1 1/2"
  – Promass M; DN 3/8"...2"
  – Promass E; DN 3/8"...2"
  – Promass H; DN 3/8"...1 1/2"
- Ambient-/fluid temperature ranges and temperature class see Page 6.
- ① = Cable entries, for number reference see Page 12.
  ④ = Operation via HART handheld DXR 375 (Ex version, only for intrinsically safe current circuits)
  ⑤ = Operation via HART handheld DXR 375 (Ex version, only for non-intrinsically safe current circuits)
- F (HT) = Promass F high-temperature version

or

Transmitter Promass 80:

- Housing: explosionproof (use only cable entry 1/2" NPT) for use in Cl. I Div. 1 Groups CD or Cl. I Zone 1 Group IIB and Cl. II and III Div. 1 Groups EFG
  Electronics, associated apparatus:
  provides instrinsically safe sensor circuits
- Sensor: instrinsically safe
  Cl. I Div. 1 Groups CD or Cl. I Zone 1 Group IIB and Cl. II and III Div. 1 Groups EFG
  – Promass F; DN 3"...10"
  – Promass F; (HT) High temperature; DN 3"
  – Promass M; DN 3"
  – Promass H; DN 2"
  – Promass I; DN 2", DN 1 1/2" FB (full bore)
- Optionally, a version for Groups A and B is available.
- Ambient-/fluid temperature ranges and temperature class see Page 6.
- ① = Cable entries, for number reference see Page 12.
  ④ = Operation via HART handheld DXR 375
  (Ex version, only for intrinsically safe current circuits)
  ⑤ = Operation via HART handheld DXR 375
  (Ex version, only for non-intrinsically safe current circuits)
- F (HT) = Promass F high-temperature version

Measuring system remote version

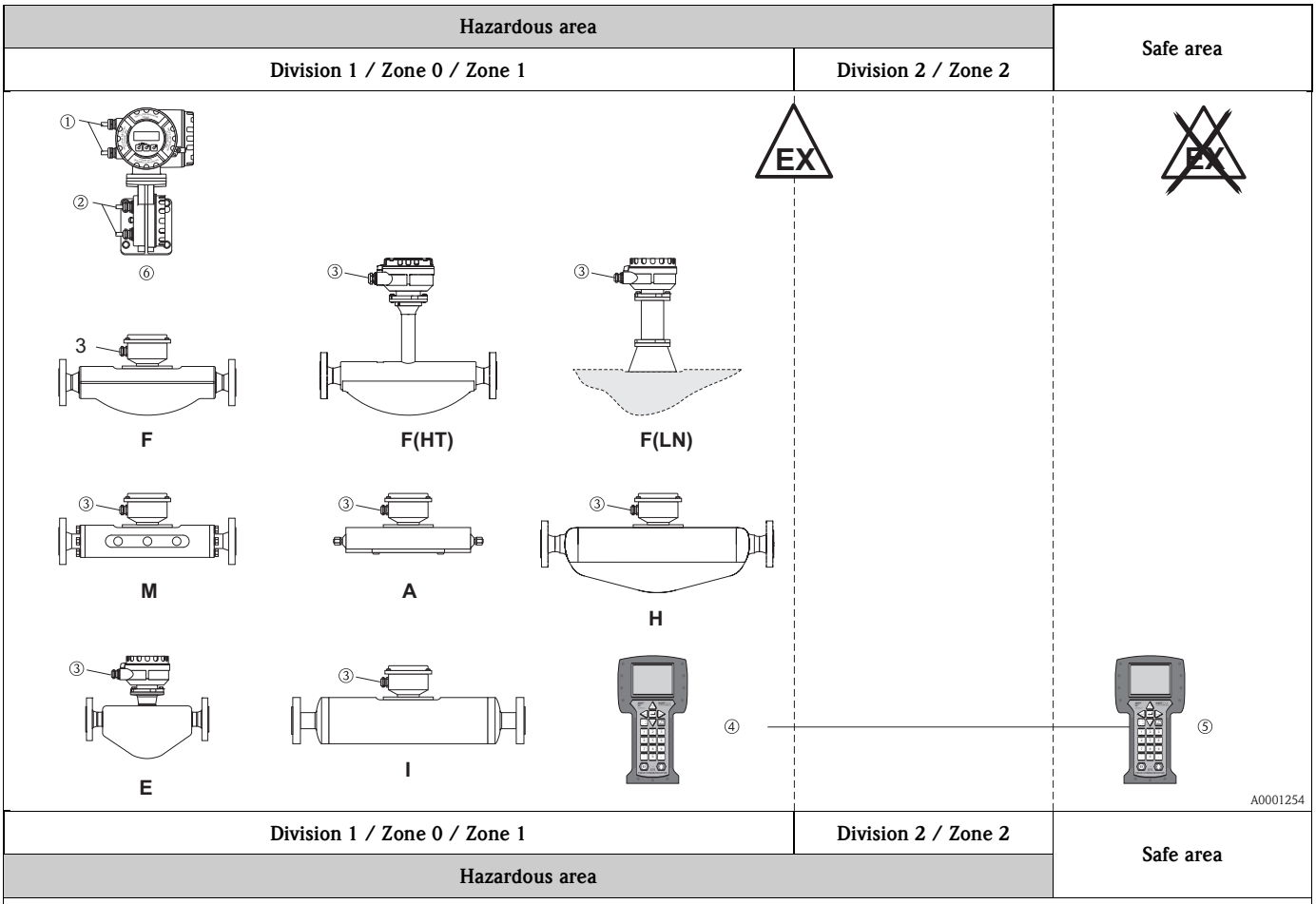

Transmitter Promass 80:

- Housing: explosionproof (use only cable entry 1/2" NPT) for use in Cl. I Div. 1 Groups ABCD or Cl. I Zone 1 Group IIC and Cl. II and III Div. 1 Groups EFG
  Electronics, associated apparatus:
  provides instrinsically safe sensor circuits
- Sensor: instrinsically safe
  Cl. I Div. 1 Groups ABCD or Cl. I Zone 1 Group IIC and Cl. II and III Div. 1 Groups EFG
  – Promass A; DN 1/24"...1/8"
  – Promass F; DN 3/8"...2"
  – Promass F; (HT) High temperature; DN 1", DN 2"
  – Promass I; DN 3/8"...1 1/2"
  – Promass M; DN 3/8"...2"
  – Promass E; DN 3/8"...2"
  – Promass H; DN 3/8"...1 1/2"
- Only the cables supplied by Endress+Hauser may be used between the transmitter and the sensor.
- Ambient-/fluid temperature ranges and temperature class see Page 6.
- ①, ②, ③= Cable entries, for number reference see Page 12.
  ④ = Operation via HART handheld DXR 375 (Ex version, only for intrinsically safe current circuits)
  ⑤ = Operation via HART handheld DXR 375 (Ex version, only for non-intrinsically safe current circuits)
  ⑥ = transmitter Promass 80
- F (LN) = Promass F Long-neck version
  (Remote version for heating)
- F (HT) = Promass F high-temperature version

or

Transmitter Promass 80:

- Housing: explosionproof (use only cable entry 1/2" NPT) for use in Cl. I Div. 1 Groups CD or Cl. I Zone 1 Group IIB and Cl. II and III Div. 1 Groups EFG
  Electronics, associated apparatus:
  provides instrinsically safe sensor circuits
- Sensor: instrinsically safe
  Cl. I Div. 1 Groups CD or Cl. I Zone 1 Group IIB and Cl. II and III Div. 1 Groups EFG
  – Promass F; DN 3"...10"
  – Promass F; (HT) High temperature; DN 3"
  – Promass M; DN 3"
  – Promass H; DN 2"
  – Promass I; DN 2", DN 1 1/2" FB (full bore)
- Optionally, a version for Groups A and B is available.
- Only the cables supplied by Endress+Hauser may be used between the transmitter and the sensor.
- Ambient-/fluid temperature ranges and temperature class see Page 6.
- ①, ②, ③= Cable entries, for number reference see Page 12.
  ④ = Operation via HART handheld DXR 375
  (Ex version, only for intrinsically safe current circuits)
  ⑤ = Operation via HART handheld DXR 375
  (Ex version, only for non-intrinsically safe current circuits)
  ⑥ = transmitter Promass 80
- F (LN) = Promass F Long-neck version
  (Remote version for heating)
- F (HT) = Promass F high-temperature version

Temperature tables compact version

Max. medium temperature [°F] (at T_a = 113 °F)		T6 185 °F	T5 212 °F	T4A 248 °F	T4 275 °F	T3A 356 °F	T2C 446 °F	T2B 500 °F	T1 842 °F
Promass E	DN 3/8"...2"	113	212	248	257	257	257	257	257

Max. medium temperature [°F] (at T_a = 122 °F)		T6 185 °F	T5 212 °F	T4A 248 °F	T4 275 °F	T3A 356 °F	T2C 446 °F	T2B 500 °F	T1 842 °F
Promass F	DN 3/8"...1 1/2"	131	158	185	212	302	365*	392*	392*
Promass F	DN 2"...10"	140	158	185	221	302	365*	392*	392*
Promass I	DN 3/8"...1", 1/2" FB	140	203	203	230	302	302	302	302
Promass I	DN 1 1/2"...2", 1" FB, 1 1/2" FB	158	185	221	248	302	302	302	302
Promass M	DN 3/8"...3"	122	140	185	221	302	302	302	302
Promass E	DN 1"...2"	122	212	248	257	257	257	257	257
Promass H	DN 3/8"	122	149	185	212	284	365	392	392
Promass H	DN 1/2"...2"	140	167	212	239	320	392	392	392

Max. medium temperature [°F] (at T_a = 140 °F)		T6 185 °F	T5 212 °F	T4A 248 °F	T4 275 °F	T3A 356 °F	T2C 446 °F	T2B 500 °F	T1 842 °F
Promass A	DN 1/24"...1/8"	140	203	239	266	284	392	392	392
Promass F	DN 3/8"...1 1/2"	131	158	185	212	302*	365*	392*	392*
Promass F	DN 2"...10"	140	158	185	212	302*	365*	392*	392*
Promass F, HT	DN 1", 2", 3"	158	185	212	239*	320*	401*	455*	662*
Promass I	DN 3/8"...1", 1/2" FB	140	203	203	230	302*	302*	302*	302*
Promass I	DN 1 1/2"...2", 1" FB, 1 1/2" FB	158	185	221	248	302*	302*	302*	302*
Promass M	DN 3/8"...3"	–	140	185	212	212	212	212	212
Promass E	DN 3/8"...2"	–	212	248	257	257	257	257	257
Promass H	DN 3/8"	122	149	185	212	284	365*	392*	392*
Promass H	DN 1/2"...2"	140	167	212	239	320	392*	392	392*

* The maximum permissible fluid temperatures apply only when the transmitter is installed in such a way that it is not above the sensor and heat can be removed freely by convection in all directions.

- The minimum **fluid temperature** is –58 °F for Promass A/F/I/M/H, and –40 °F for Promass E.
- The minimum **ambient temperature** is –4 °F. A version for ambient temperatures up to –40 °F is optionally available.

Temperature tables sensor remote version

Max. medium temperature [°F] (at T_a = 113 °F)		T6 185 °F	T5 212 °F	T4A 248 °F	T4 275 °F	T3A 356 °F	T2C 446 °F	T2B 500 °F	T1 842 °F
Promass E	DN 3/8"...2"	113	212	248	257	257	257	257	257

Max. medium temperature [°F] (at T_a = 140 °F)		T6 185 °F	T5 212 °F	T4A 248 °F	T4 275 °F	T3A 356 °F	T2C 446 °F	T2B 500 °F	T1 842 °F
Promass A	DN 1/24"...1/8"	140	203	239	266	284	392	392	392
Promass F	DN 3/8"...1 1/2"	131	158	185	212	302	365	392	392
Promass F	DN 2"...10"	140	158	185	221	302	365	392	392
Promass F, HT	DN 1", 2", 3"	158	185	212	239	320	401	455	662
Promass I	DN 3/8"...1", 1/2" FB	140	203	203	230	302	302	302	302
Promass I	DN 1 1/2"...2", 1" FB, 1 1/2" FB	158	185	221	248	302	302	302	302
Promass M	DN 3/8"...3"	122	140	185	221	212	302	302	302
Promass E	DN 3/8"...2"	–	212	248	257	257	257	257	257
Promass H	DN 3/8"	122	149	185	212	284	365	392	392
Promass H	DN 1/2"...2"	140	167	212	239	320	392	392	392

- The minimum **fluid temperature** is –58 °F for Promass A/F/I/M/H, and –40 °F for Promass E.
- The minimum **ambient temperature** is –40 °F.

Transmitter

- The Promass 80 (remote version) transmitter has a T6 temperature class rating when installed in the EEx d housing for operation at ambient temperatures up to T_a = 140 °F.
- The minimum **ambient temperature** is –4 °F. A version for ambient temperatures up to –40 °F is optionally available.

✎ **Note!**

At the specified medium temperatures, the equipment is not subjected to temperatures impermissible for the temperature class in question.

Approvals

Nr. / Approval type	Description
J.I.3009083 (Special notes, see Page 8)	for the electric flow measuring system Proline Promass 80 **Identification:** see below

Compact version

P r o m a s s 8 0 * * * – * * * * * * * * * * * * *

A = current HART, frequency
D = current HART, frequency, status, status input
S = current HART (IS) active, frequency (IS)
T = current HART (IS) passive, frequency (IS)
8 = current HART, current, frequency, status input

Promass 80 A	DN 1/24"...1/8"	**XP-IS-DIP I, II, III/1/ABCDEFG**
Promass 80 F	DN 3/8"...2"	
Promass 80 F (HT)	DN 1", 2"	
Promass 80 I	DN 3/8"...1 1/2"	
Promass 80 M	DN 3/8"...2"	
Promass 80 E	DN 3/8"...2"	
Promass 80 H	DN 3/8"...1 1/2"	
Promass 80 F	DN 3"...10"	**XP-IS-DIP I, II, III/1/CDEFG**
Promass 80 F (HT)	DN 3"	(Optionally, a version for Groups A and B is available)
Promass 80 I	DN 2", DN 1 1/2" FB	
Promass 80 M	DN 3"	
Promass 80 H	DN 2"	

Remote version

P r o m a s s 8 0 * * * – * * * * * * * * * * * * *

A = current HART, frequency
D = current HART, frequency, status, status input
S = current HART (IS) active, frequency (IS)
T = current HART (IS) passive, frequency (IS)
8 = current HART, current, frequency, status input

Transmitter

Promass 80		**XP-IS-DIP I, II, III/1/ABCDEFG** or **XP-IS-DIP I, II, III/1/CDEFG**

Sensor

Promass A	DN 1/24"...1/8"	**XP-IS-DIP I, II, III/1/ABCDEFG**
Promass F	DN 3/8"...2"	
Promass F (HT)	DN 1", 2"	
Promass I	DN 3/8"...1 1/2"	
Promass M	DN 3/8"...2"	
Promass E	DN 3/8"...2"	
Promass H	DN 3/8"...1 1/2"	
Promass F	DN 3"...10"	**XP-IS-DIP I, II, III/1/CDEFG**
Promass F (HT)	DN 3"	(Optionally, a version for Groups A and B is available)
Promass I	DN 2", DN 1 1/2" FB	
Promass M	DN 3"	
Promass H	DN 2"	

Notified body

The measuring system was tested for approval by the following named entity: FM Global Technologies LLC

Special conditions

1. The flowmeter must be integrated into the potential equalisation system. Potential must be equalized along the intrinsically safe sensor circuits.
2. Control room equipment shall not use or generate more than 250 V rms.
3. Ratings for devices connected to terminals Nos. 26 to 27 of the Promass 80 transmitter must not exceed Um = 250 V and Im = 500 mA: it is impermissible to connect devices with higher ratings to these terminals (Does not apply to Promass 80***-**********S/T with intrinsically safe output circuits).

☝ **Caution!**

4. Use supply wires suitable for 41 °F above ambient temperature, but at least for 176 °F.
5. Class II Group G: The surface temperature of the apparatus cannot exceed 329 °F. The user must limit the process temperature for Group G to 284 °F.
6. Transmitter enclosure G02 explosionproof for use in Cl. I Div. 1 Groups A, B, C, D and dust-ignition proof for Cl. II, III Div. 1 Groups E, F, G. Seal not required.
7. Sensor circuits intrinsically safe for Cl. I, II, III Div. 1 Group A, B, C, D, E, F, G except
   Promass M DN 3" (sensor version Group C-D)
   Promass I DN 2" (sensor version Group C-D)
   Promass F DN 3"/4"/6"/10" (sensor version Group C-D)
   which are only suitable for Cl. I, II, III Div. 1 Group C, D, E, F, G.
   (optionally, a version for Groups A and B is available).
8. It is not permissible to connect the service adapter in explosive atmospheres.
9. Install per National Electrical Code. Install intrinsically safe circuits per NEC ANSI/NFPA 70 and ISA RP 12.6 respecting the explosionproof integrity of the enclosure.

⚠ **Warning!**

10. Substitution of components may impair intrinsic safety.

General warnings

⚠ **Warning!**

- Installation, connection to the electricity supply, commissioning and maintenance of the devices must be carried out by qualified specialists trained to work on Ex-rated devices.
- Compliance with national regulations relating to the installation of devices in potentially explosive atmospheres is mandatory, if such regulations exist.
- Open the device only when it is de-energized (and after a delay of at least 10 minutes following shutdown of the power supply).
- The housing of the Ex-rated transmitter can be turned in 90° steps. Whereas the non-Ex version has a bayonet adapter, however, the Ex version has a thread. Recesses for centering the worm screw are provided to prevent inadverted movement ot the transmitter housing. It is permissible to turn the transmitter housing through a maximum of 180° during operation (in either direction), without compromising explosion protection. After turning the housing the worm screw must be tightened again.
- The screw cap has to be removed before the local display can be turned, and this must be done with the device de-energized (and after a delay of at least 10 minutes following shutdown of the power supply). Be sure that the device is closed properly, before connecting it to power again.

Electrical connections

Power supply

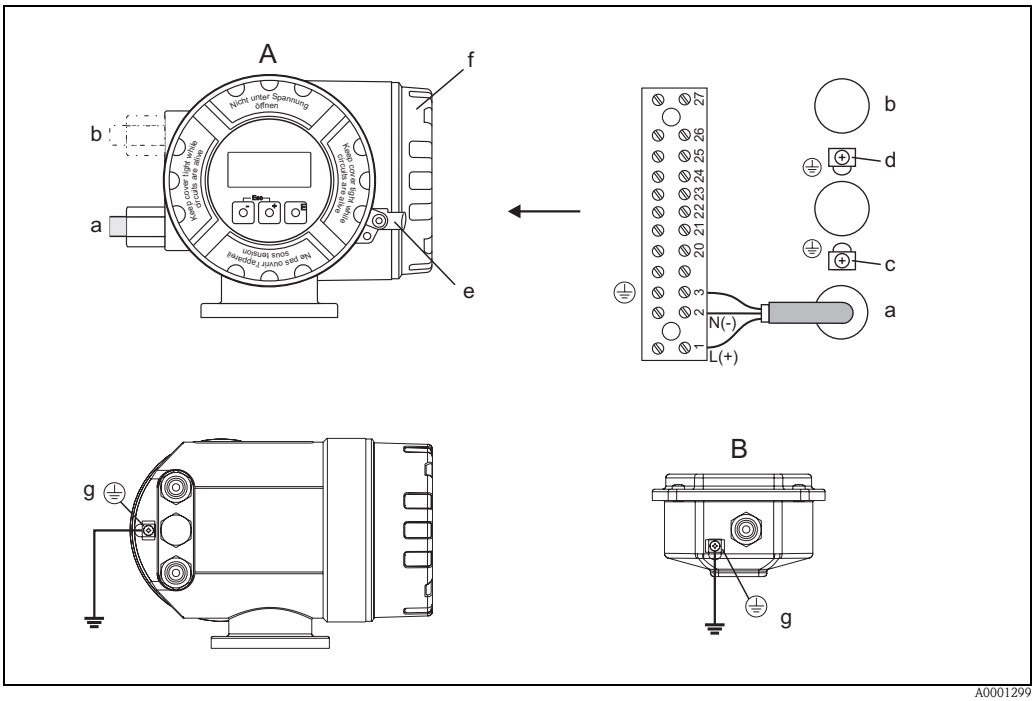

Fig. 1: Ground terminal for potential equalisation

A Transmitter housing (compact or remote version), front view
B Connection housing of remote version

a Power supply cable
b Input/output circuit cable (see Fig. 2)
c Ground terminal for protective earth
d Ground terminal for signal cable shield (see Fig. 2)
e Securing clamp
f Connection compartment cover
g Screw terminal for connecting to potential equalisation

Caution!

- The transmitter (compact and remote version) is to be securely connected to the potential equalization system using the screw terminal on the outside of the transmitter housing.
- With the remote version, the sensor's wiring compartment housing is to be grounded using the external screw terminal . Alternatively, the sensor can be connected to the potential equalization system via the pipeline when a ground connection according to regulations can be assured.

The table below contains the values that are identical for all versions, irrespective of the type code:

Terminals	**1** **L (+)**	**2** **N (–)**	**3**
Designation	Power supply (Fig. 1: a)		Protective earth
Functional Values	AC: U = 85...260 V or AC: U = 20...55 V or DC: U = 16...62 V Power consumption: 15 VA / 15 W		Caution! Follow ground network requirements for facility!
Intrinisically circuit	no		
U_m =	260 V AC		

Input/output circuit

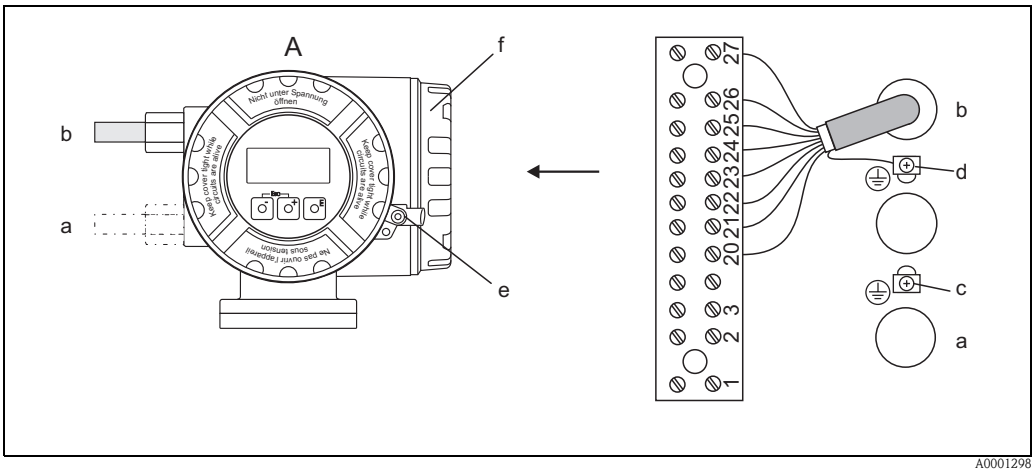

A0001298

Fig. 2: Input/output circuit

A Transmitter housing (compact or remote version), front view

a Power supply cable (see Fig. 1)
b Input/output circuit cable
c Ground terminal for protective earth (see Fig. 1)
d Ground terminal for signal cable shield
e Securing clamp
f Connection compartment cover

✎ **Note!**
The table below contains the values which depend on the type code (type of device). Always remember to compare the type code in the table with the code on the nameplate of your device.

Terminal assignment of input/output circuits with an intrinsically safe circuit

*Transmitter Promass 80***-***********S*

Type code	20 (+)	21 (–)	22 (+)	23 (–)	24 (+)	25 (–)	26 (+)	27 (–)
80***-***********S	–		–		Pulse/frequency output		Current output HART	
Safety-related relevant values								
Intrinsically safe circuit	–		–		Ex ia		Ex ia	
U_o =	–		–				21.8 V DC	
I_o =	–		–				90 mA	
P_o =	–		–				490 mW	
L_o IIC/IIB =	–		–				4.1 mH / 15 mH	
C_o IIC/IIB =	–		–				150 nF / 1160 nF	
[1)]L_o IIC/IIB =	–		–				2 mH / 10 mH	
[1)]C_o IIC/IIB =	–		–				80 nF / 300 nF	
U_i =	–		–		30 V DC		30 V DC [2)]	
I_i =	–		–		300 mA		10 mA [2)]	
P_i =	–		–		600 mW		0.3 W [2)]	
L_i IIC =	–		–		negligible		negligible	
C_i IIC =	–		–		6 nF		6 nF	
Functional values								
	–		–		f = 2...1000 Hz passive: 30 V DC/250 mA		active: 0/4...20 mA R_L HART ≥ 250 Ω	

[1)] Permissible values for simultaneous occurrence of concentrated inductances and capacitances.
[2)] The circuitry must comply with the applicable regulations for electrical installations.

*Transmitter Promass 80***-***********T*

Type code	20 (+)	21 (–)	22 (+)	23 (–)	24 (+)	25 (–)	26 (+)	27 (–)
80***-***********T	–		–		Pulse/frequency output		Current output HART	
Safety-related relevant values								
Intrinsically safe circuit	–		–		Ex ia		Ex ia	
U_i =	–		–		30 V DC		30 V DC	
I_i =	–		–		300 mA		100 mA	
P_i =	–		–		600 mW		1,25 W	
L_i IIC =	–		–		negligible		negligible	
C_i IIC =	–		–		6 nF		6 nF	
Functional values								
	–		–		f = 2...1000 Hz passive: 30 V DC/250 mA		passive: 0/4...20 mA Voltage drop ≤ 9 V $R_L < \frac{V_{supply} - 9\,V}{25\,mA}$	

Terminal assignment of input/output circuits without an intrinsically safe circuit

Type code	20 (+)	21 (–)	22 (+)	23 (–)	24 (+)	25 (–)	26 (+)	27 (–)
80***-***********A					Frequency output		Current output HART	
80***-***********D	Status input		Status output		Frequency output		Current output HART	
80***-***********8	Status input		Frequency output		Current output 2		Current output 1 HART	
Safety-related relevant values								
Intrinsically safe circuit	no							
U_m	260 V AC							
I_m	500 mA							
Functional values → see following Table								

Functional values of input/output circuits without an intrinsically safe circuit

Input/output circuit	Functional values
Current output HART	Active/passive selectable, galvanically isolated, time constant selectable (0.05...100 s), full scale value selectable, temperature coefficient: typically 0.005% o.r./°C, resolution: 0.5 µA ▪ active: 0/4...20 mA, $R_L \geq 250\ \Omega$ ▪ passive: 4...20 mA; supply voltage V_S 18...30 V DC; $R_i \geq 150\ \Omega$
Current output	Active/passive selectable, galvanically isolated, time constant selectable (0.05...100 s), full scale value selectable, temperature coefficient: typically 0.005% o.r./°C, resolution: 0.5 µA ▪ active: 0/4...20 mA, $R_L < 700\ \Omega$ ▪ passive: 4...20 mA; supply voltage V_S 18...30 V DC; $R_i \geq 150\ \Omega$
Impuls/Frequency output	galvanically isolated ▪ passive: Open Collector, 30 V DC, 250 mA ▪ Frequency output Full scale frequency: 2...1000 Hz (f_{max} = 1250 Hz) on/off ratio 1:1; pulse width max. 2 s ▪ Pulse output pulse value and pulse polarity selectable pulse width configurable (0.05...2000 ms)
Status output	galvanically isolated U = 3...30 V DC / 250 mA
Status input	galvanically isolated U = 3...30 V DC; R_i = 5kΩ

Connection of remote version connecting cable

Connection between sensor and transmitter:

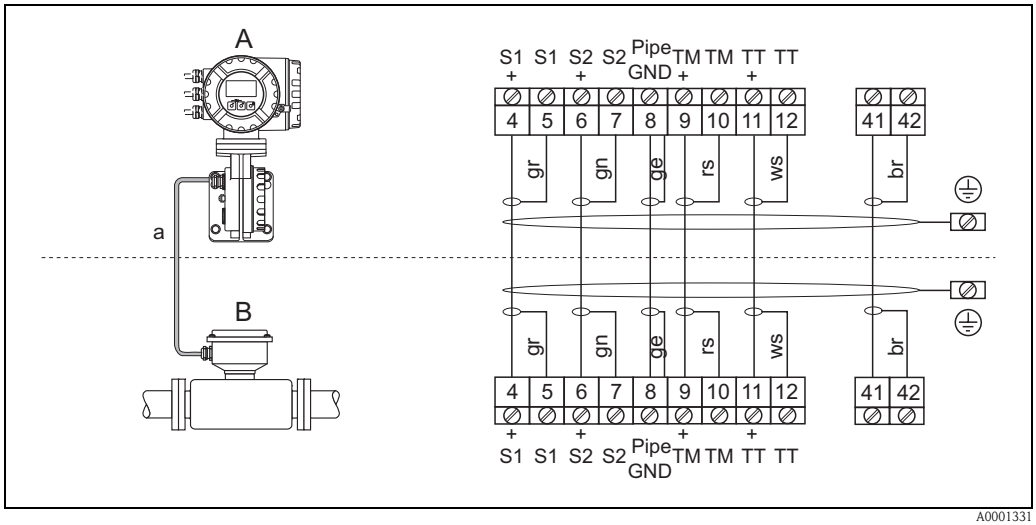

Fig. 3: Connection cable (remote version)

A Transmitter remote version
B Compartment housing remote version

a sensor cable

Service adapter

The service adapter is exclusively for connection to E+H approved service interfaces.

⚠ **Warning!**
It is not permissible to connect the service adapter in explosive atmospheres.

Device fuse

⚠ **Warning!**
Use only fuses of the following types; the fuses are installed on the power supply board:

- Voltage 20...55 V AC / 16...62 V DC:
  fuse 2.0 A slow-blow, disconnect capacity 1500 A
  (Schurter, 0001.2503 or Wickmann, Standard Type 181 2.0 A)
- Voltage 85...260 V AC:
  fuse 0.8 A slow-blow, disconnect capacity 1500 A
  (Schurter, 0001.2507 or Wickmann, Standard Type 181 0.8 A)

Cable entries

Number reference for Figures on Page 4 and Page 5:

①	Cable entries for the transmitter terminal compartment (XP version) power supply / bus cable: (Promass 80***-******N/P*****) Choice of thread for cable entries, ½" NPT. Make sure that the XP cable glands/entries are secured to prevent working loose.
②, ③	Cable entries for the transmitter terminal compartment (remote version) sensor cable connection: Choice of thread for cable entry, ½" NPT.

Cable specifications

The sensor cable connection (electrode circuit) between sensor and transmitter has an IS type of protection rating.

☝ **Caution!**
Use only the cable sets supplied by E+H.

Technical data

Dimensions wall-mount housing

- The dimensions of the Ex-transmitter housing (remote version) can be seen in the following illustration. The dimensions of the Ex-transmitter housing in the compact version are also contained in this.
- The dimensions of the transmitter correspond to the standard versions. Please find these dimensions in the Technical Information.
- Weight + approx. 4.4 lbs more than the standard version (see Technical Information)

✎ **Note!**

Applicable "Technical Information":
- Promass 80/83 A → TI054D
- Promass 80/83 E → TI061D
- Promass 80/83 F, M → TI053D
- Promass 80/83 I, H → TI052D

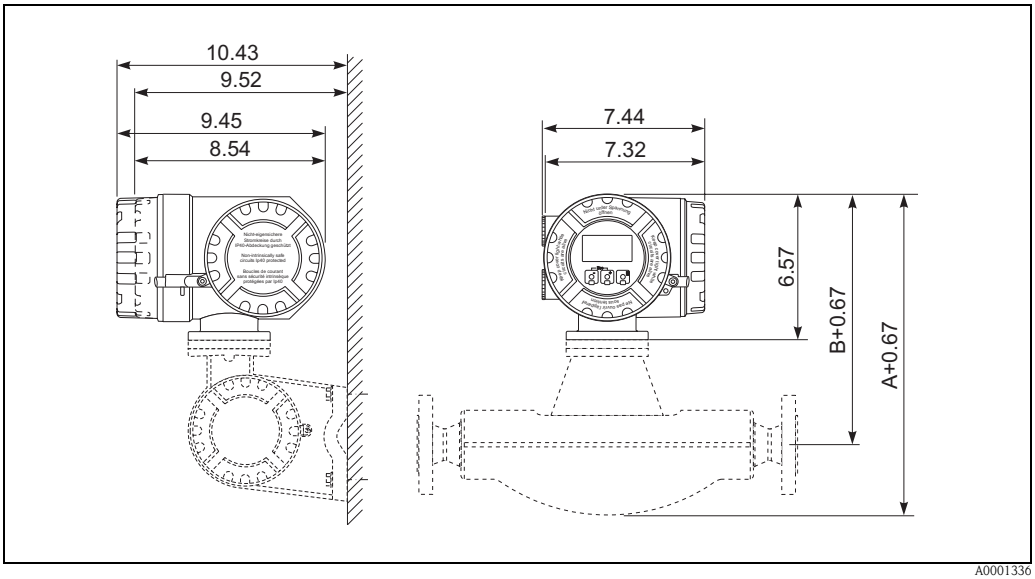

Fig. 4: Dimensions of the Ex-transmitter housing

Device identification

Promass 80 transmitter and A/F/I/M/E/H sensor

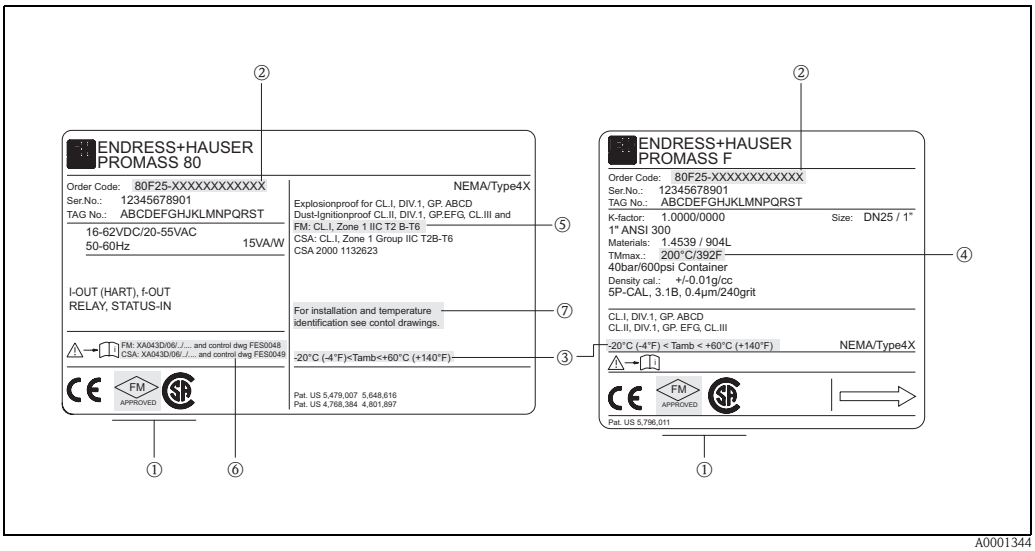

Fig. 5: Nameplate of transmitter and nameplate of sensor (example)

1 *Label of the notified body: Factory Mutual Research*
2 *Type code*
3 *Ambient temperature range*
4 *Maximum medium temperature*
5 *Type of protection and explosion group for the measuring system*
6 *Applicable Ex documentation*
7 *Warning*

Control Drawings

Endress+Hauser Reinach hereby declares that the product is in conformity with the requirements of the FACTORY MUTUAL standards.

Hazardous Locations
Class I Division 1 Groups ABCD or Class I Zone 1 Groups IIC and Class II and III Division 1 Groups EFG

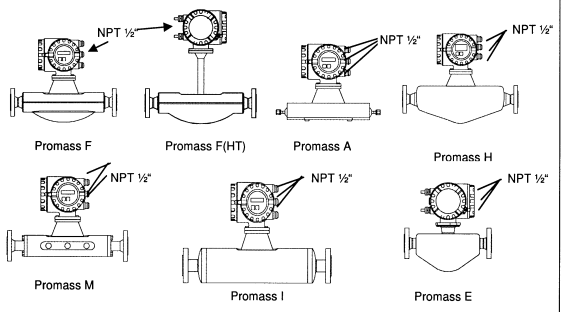

WARNING: SUBSTITUTION OF COMPONENTS MAY IMPAIR INTRINSIC SAFETY.

Temperature table	max. medium temperature [°C]								
	T6	T5	T4A	T4	T3A	T2C	T2B	T2	T1
Ta = 45°C:									
PROMASS E DN8/15/25/40/50	45	100	120	125	125	125	125	125	125
Ta = 50°C:									
PROMASS M DN8/15/25/40/50/80	50	60	85	105	150	150	150	150	150
PROMASS F DN8/15/25/40	55	70	85	100	150	185*	200*	200*	200*
PROMASS F DN50/80/100/150/250	60	70	85	105	150	185*	200*	200*	200*
PROMASS I DN8/15/16/25	60	95	95	110	150	150	150	150	150
PROMASS I DN26/40/41/50	70	85	105	120	150	150	150	150	150
PROMASS H DN8	50	65	85	100	140	185	200	200	200
PROMASS H DN15/25/40/50	60	75	100	115	160	200	200	200	200
Ta = 60°C:									
PROMASS A DN1/2/4	60	95	115	130	140	200	200	200	200
PROMASS M DN8/15/25/40/50/80	---	60	85	100	100	100	100	100	100
PROMASS F DN8/15/25/40	55	70	85	100	150*	185*	200*	200*	200*
PROMASS F DN50/80/100/150/250	60	70	85	100	150*	185*	200*	200*	200*
PROMASS I DN8/15/16/25	60	95	95	110	150*	150*	150*	150*	150*
PROMASS I DN26/40/41/50	70	85	105	120	150*	150*	150*	150*	150*
PROMASS H DN8	50	65	85	100	140	185*	200*	200*	200*
PROMASS H DN15/25/40/50	60	75	100	115	160	200*	200*	200*	200*
PROMASS E DN8/15/25/40/50	---	100	120	125	125	125	125	125	125
PROMASS F(HT) DN25/50/80	70	85	100	115*	160*	205*	235*	275*	350*

* Device shall not be installed in such way that the transmitter enclosure is located above the sensor.

Tm min. is –40°C for Promass E Ta min. is –20°C
Tm min. is –50°C for Promass A/F/H/I/M Ta min. is –20°C

Communication Options	Control Drawing
I/O option = F,H,J	see FES 0048 - 0001
I/O option = G,K	see FES 0048 - 0002
I/O option = S,T	see FES 0048 - 0004
I/O option = R,U	see FES 0048 - 0005

Notes:
1. Control room equipment shall not use or generate more than 250 V rms.
2. Caution: Use supply wires suitable for 5 °C above ambient temperature, but at least for 80 °C / 176°F.
3. Class II Group G: The surface temperature of the apparatus cannot exceed 165 °C / 329°F. The user must limit the process temperature for Group G to 140°C.
4. Transmitter enclosure PROline G02 explosionproof for use in Cl. I Div. 1 Groups A, B, C, D and dust-ignitionproof for Cl. II, III Div. 1 Groups E, F, G
5. Transmitter enclosure PROline G02 is factory sealed for use in Cl. I Div. 1 Groups A, B, C, D. Means that a conduit seal is not required within 18 inches (450mm) of the enclosure.
6. Sensor circuits intrinsically safe for Cl. I, II, III Div. 1 Group A, B, C, D, E, F, G except limited versions of
   PROMASS M DN80 (sensor version Group C-D)
   PROMASS I DN50 (sensor version Group C-D)
   PROMASS F DN80/100/150/250 (sensor version Group C-D)
   Promass H DN50 (sensor version Group C-D)
   which are only suitable for Cl. I, II, III Div. 1 Group C, D, E, F, G
7. The minimum medium temperautre is –50°C
8. Install all intrinsically safe circuits per NEC ANSI/NFPA 70 and ISA RP 12.6 respecting the Explosionproof Integrity of the enclosure

Aenderungen:						
	A	16.05.01 / Bn	F	27.04.04/MDI	Alle gesetzlichen Urheberrechte vorbehalten. Diese Zeichnung darf ohne unsere Genehmigung weder vervielfältigt werden noch dritten Personen und Konkurrenzfirmen zugängig gemacht werden.	
	B	17.12.01/MDI	G			
	C	07.06.02/MDI	H			
	D	29.10.02 /MDI	J			
	E	06.06.03/UD	K			

Ersteller: FES / **ID 1090**
FILE: M:\ZEICHNG\FES0048\F\040323.doc

FM Control Drawing Div. 1 / Zone 1
Class I Zone 1
Compact Version
PROMASS 40 / 8. A / F / I / M / H / E

Massstab

Gezeichnet	06.10.00	Bn
Geprüft		
Ex-geprüft	27.04.04	MDI
Gesehen		

Flowtec AG, Kaegenstrasse 7, CH-4153 Reinach BL1, Postfach

FES0048 F 1/2

F06-8xMBxxZZ-01-xx-xx-en-001

Hazardous Locations
Class I Division 1 Groups ABCD or Class I Zone 1 Groups IIC and Class II and III Division 1 Groups EFG

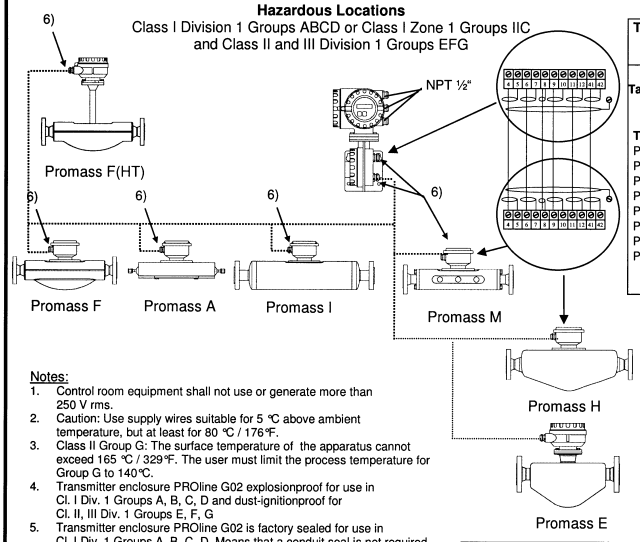

Temperature table	max. medium temperature [°C]								
	T6	T5	T4A	T4	T3A	T2C	T2B	T2	T1
Ta = 45 °C									
PROMASS E DN25/40/50	45	100	120	125	125	125	125	125	125
Ta = 60 °C									
PROMASS A DN1/2/4	60	95	115	130	140	200	200	200	200
PROMASS M DN8/15/25/40/50/80	50	60	85	105	150	150	150	150	150
PROMASS F DN8/15/25/40	55	70	85	100	150	185	200	185	200
PROMASS F DN50/80/100/150/250	60	70	85	105	150	185	200	185	200
PROMASS I DN8/15/16/25	60	95	95	110	150	150	150	150	150
PROMASS I DN26/40/41/50	70	85	105	120	150	150	150	150	150
PROMASS H DN8	50	65	85	100	140	185	200	185	200
PROMASS H DN15/25/40/50	60	75	100	115	160	200	200	200	200
PROMASS E DN8/15/25/40/50	-	100	120	125	125	125	125	125	125
PROMASS F(HT) DN25/50/80	70	85	100	115	160	205	235	275	350

The ambient temperature is –20°C ... +60°C for the transmitter and –40°C ... +60°C for the sensor

The minimum medium temperature is –50°C . A special version of PromassA/F/H is suitable for medium temperatures down to –200°C.
The minimum medium temperature for Promass E is limited to –40 °C.

WARNING: SUBSTITUTION OF COMPONENTS MAY IMPAIR INTRINSIC SAFETY.

Notes:
1. Control room equipment shall not use or generate more than 250 V rms.
2. Caution: Use supply wires suitable for 5 °C above ambient temperature, but at least for 80 °C / 176°F.
3. Class II Group G: The surface temperature of the apparatus cannot exceed 165 °C / 329°F. The user must limit the process temperature for Group G to 140°C.
4. Transmitter enclosure PROline G02 explosionproof for use in Cl. I Div. 1 Groups A, B, C, D and dust-ignitionproof for Cl. II, III Div. 1 Groups E, F, G
5. Transmitter enclosure PROline G02 is factory sealed for use in Cl. I Div. 1 Groups A, B, C, D. Means that a conduit seal is not required within 18 inches (450mm) of the enclosure.
6. Sensor circuits intrinsically safe for Cl. I, II, III Div. 1 Group A, B, C, D, E, F, G except a limited version of
   PROMASS M DN80 (sensor version Group C-D)
   PROMASS I DN50 (sensor version Group C-D)
   PROMASS F DN80/100/150/250 (sensor version Group C-D)
   PROMASS H DN50 (sensor version Group C-D)
   which are only suitable for Cl. I, II, III Div. 1 Group C, D, E, F, G
7. Allowed cable glands: NPT ½", G ½", M20x1.5 or PG13.5
8. A sensor which was connected to a Promass 60/63/64 transmitter can also be installed to a Promass 8. transmitter. For this case this control drawing is relevant for safe use, except the minimum ambient temperature which is limited to -20°C
9. Install all intrinsically safe cricuits per NEC ANSI/NFPA 70 and ISA RP 12.6 respecting the Explosionproof Integrity of the enclosure

Aenderungen:						
	A	16.05.01 /Bn	F	27.04.04/MDI	Alle gesetzlichen Urheberrechte vorbehalten. Diese Zeichnung darf ohne unsere Genehmigung weder vervielfältigt werden noch dritten Personen und Konkurrenzfirmen zugängig gemacht werden.	
	B	17.12.01/MDI	G			
	C	07.06.02/MDI	H			
	D	29.10.02 /MDI	J			
	E	06.06.03/UD	K			

Ersteller: FES / **ID 1090**
FILE: M:\ZEICHNG\FES0048\F\040323.doc

FM Control Drawing Div. 1 / Zone 1
Class I Zone 1
Remote Version
PROMASS 40 / 8. A / F / I / M / H / E

Massstab

Gezeichnet	06.10.00	Bn
Geprüft		
Ex-geprüft	27.04.04	MDI
Gesehen		

Flowtec AG, Kaegenstrasse 7, CH-4153 Reinach BL1, Postfach

FES0048 F 2/2

F06-8xMBxxZZ-01-xx-xx-en-002

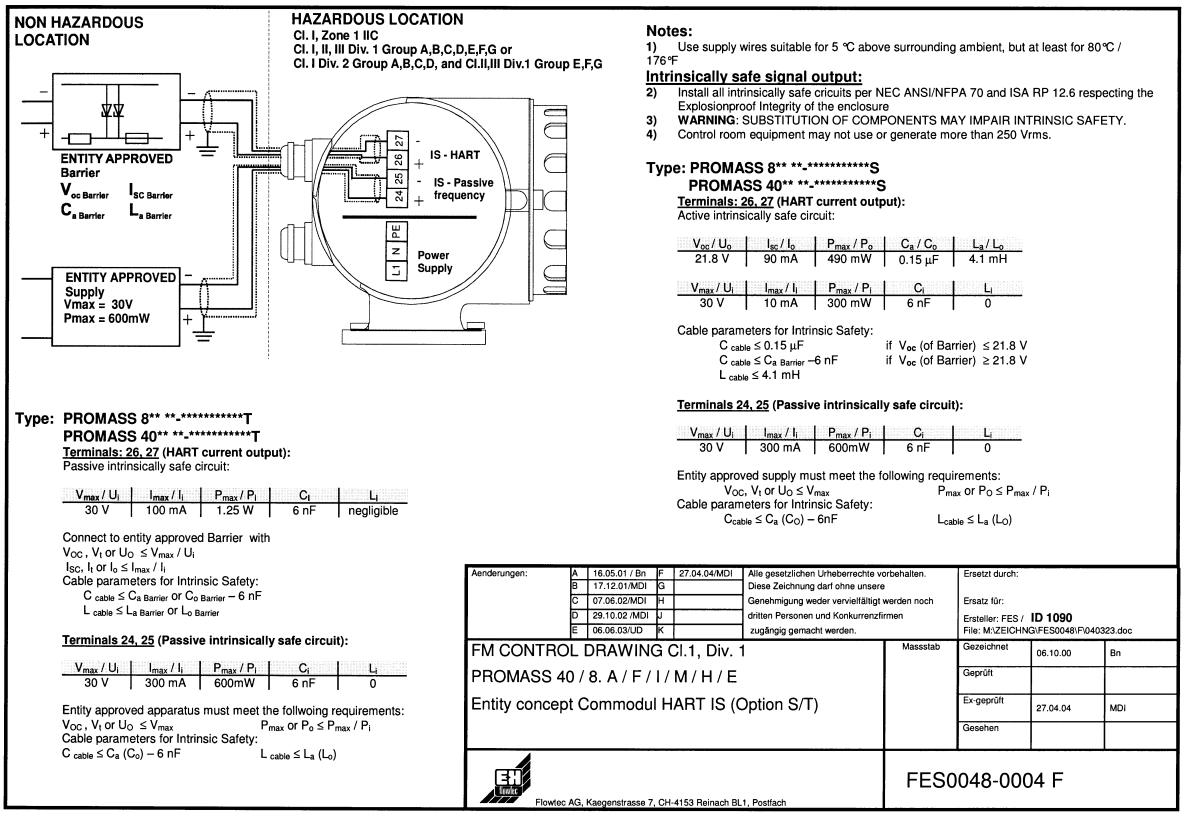

F06-8xMBxxZZ-01-xx-xx-en-006

Level Pressure Flow Temperature Liquid Analysis Registration Systems Components Services Solutions

Safety Instructions

Proline Promass 80

Division 1

Ex documentation

This documentation is an integral part of the following Operating Instructions:

- BA059D, Operating Instruction, Proline Promass 80

Contents

Measuring system compact version 18
Measuring system remote version 19
Temperature tables compact version 20
Temperature tables sensor remote version 20
Approvals 21
Notified body 22
Special conditions 22
General warnings 22
Electrical connections 23
Connection of remote version connecting cable 26
Service adapter 26
Device fuse 26
Cable entries 26
Cable specifications 26
Technical data 27
Device identification 28
Control drawings 29

XA043D/06/en/01.05
Nr. 50098482

Endress+Hauser
People for Process Automation

Measuring system compact version

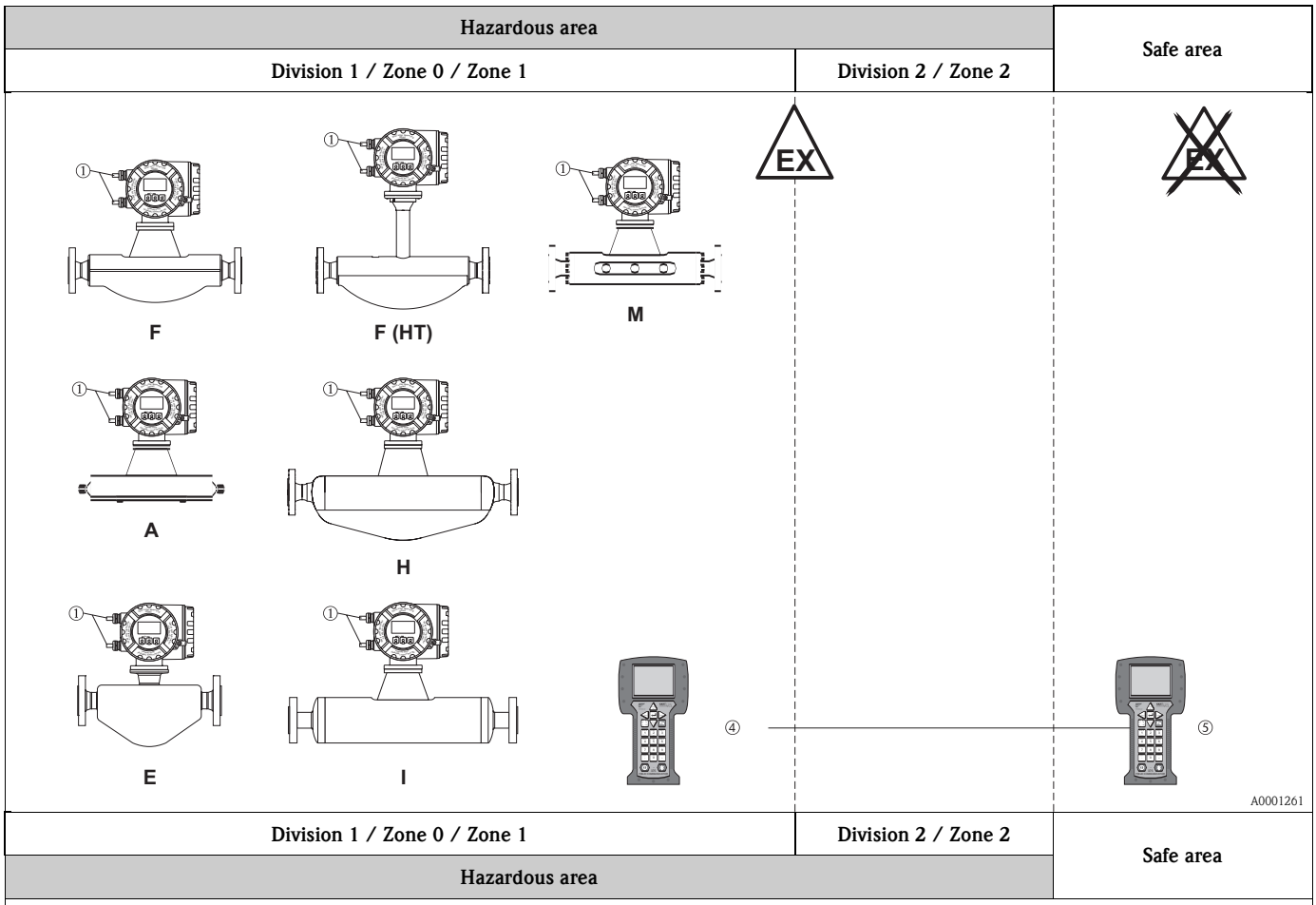

Transmitter Promass 80:

- Housing: explosionproof (use only cable entry 1/2" NPT) for use in Cl. I Div. 1 Groups ABCD or Cl. I Zone 1 Group IIC and Cl. II and III Div. 1 Groups EFG
  Electronics, associated apparatus:
  provides instrinsically safe sensor circuits
- Sensor: instrinsically safe
  Cl. I Div. 1 Groups ABCD or Cl. I Zone 1 Group IIC and Cl. II and III Div. 1 Groups EFG
  – Promass A; DN 1...4
  – Promass F; DN 8...50
  – Promass F; (HT) High temperature; DN 25, DN 50
  – Promass I; DN 8...40
  – Promass M; DN 8...50
  – Promass E; DN 8...50
  – Promass H; DN 8...40
- Ambient-/fluid temperature ranges and temperature class see Page 20.
- ① = Cable entries, for number reference see Page 26.
  ④ = Operation via HART handheld DXR 375 (Ex version, only for intrinsically safe current circuits)
  ⑤ = Operation via HART handheld DXR 375 (Ex version, only for non-intrinsically safe current circuits)
- F (HT) = Promass F high-temperature version

or

Transmitter Promass 80:

- Housing: explosionproof (use only cable entry 1/2" NPT) for use in Cl. I Div. 1 Groups CD or Cl. I Zone 1 Group IIB and Cl. II and III Div. 1 Groups EFG
  Electronics, associated apparatus:
  provides instrinsically safe sensor circuits
- Sensor: instrinsically safe
  Cl. I Div. 1 Groups CD or Cl. I Zone 1 Group IIB and Cl. II and III Div. 1 Groups EFG
  – Promass F; DN 80...250
  – Promass F; (HT) High temperature; DN 80
  – Promass M; DN 80
- – Promass H; DN 50
  – Promass I; DN 50, DN 40 FB (full bore)
- Optionally, a version for Groups A and B is available.
- Ambient-/fluid temperature ranges and temperature class see Page 20.
- ① = Cable entries, for number reference see Page 26.
  ④ = Operation via HART handheld DXR 375
  (Ex version, only for intrinsically safe current circuits)
  ⑤ = Operation via HART handheld DXR 375
  (Ex version, only for non-intrinsically safe current circuits)
- F (HT) = Promass F high-temperature version

Measuring system remote version

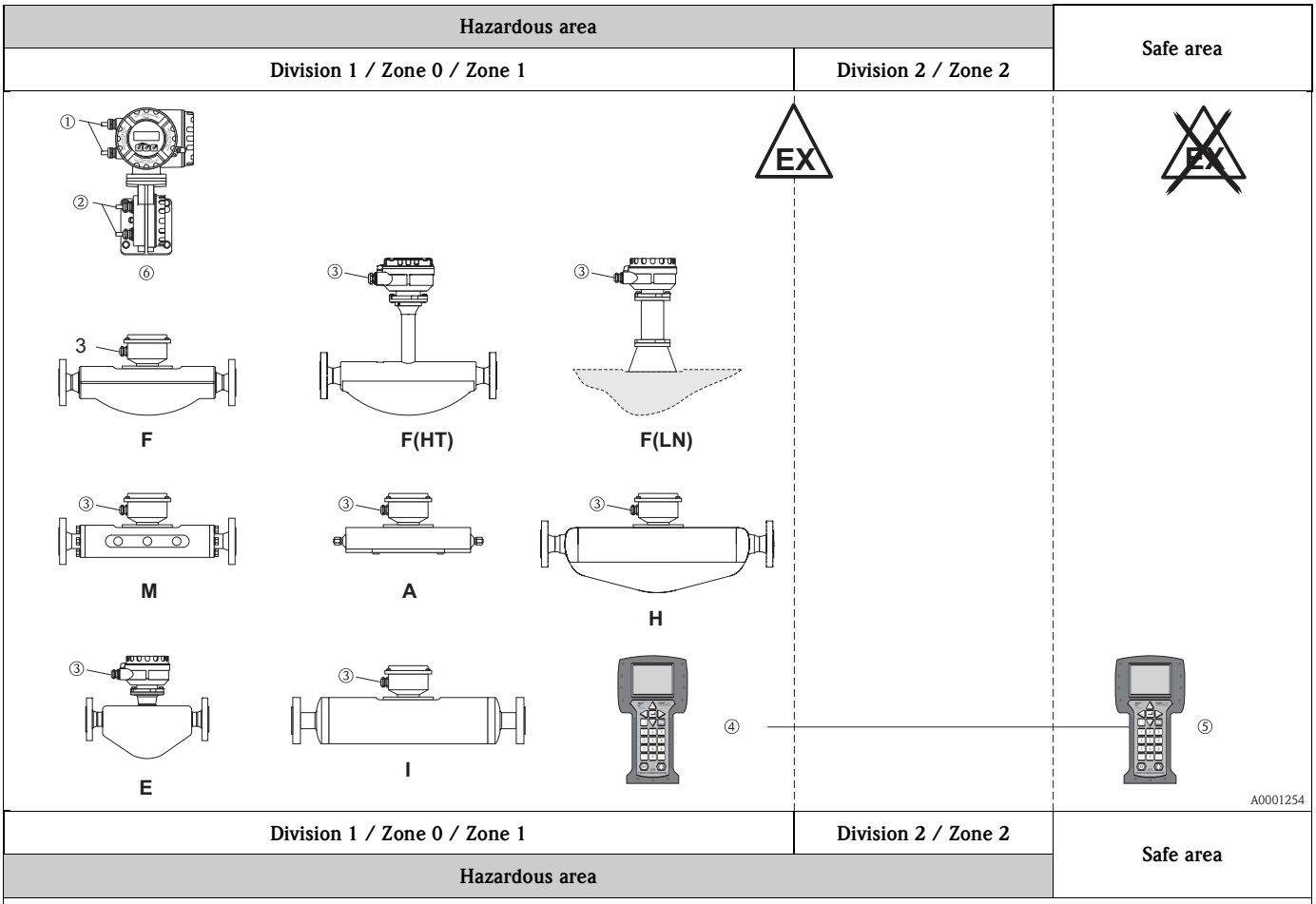

Transmitter Promass 80:

- Housing: explosionproof (use only cable entry 1/2" NPT) for use in Cl. I Div. 1 Groups ABCD or Cl. I Zone 1 Group IIC and Cl. II and III Div. 1 Groups EFG
  Electronics, associated apparatus:
  provides instrinsically safe sensor circuits
- Sensor: instrinsically safe
  Cl. I Div. 1 Groups ABCD or Cl. I Zone 1 Group IIC and Cl. II and III Div. 1 Groups EFG
  – Promass A; DN 1...4
  – Promass F; DN 8...50
  – Promass F; (HT) High temperature; DN 25, DN 50
  – Promass I; DN 8...40
  – Promass M; DN 8...50
  – Promass E; DN 8...50
  – Promass H; DN 8...40
- Only the cables supplied by Endress+Hauser may be used between the transmitter and the sensor.
- Ambient-/fluid temperature ranges and temperature class see Page 20.
- ①, ②, ③= Cable entries, for number reference see Page 26.
  ④ = Operation via HART handheld DXR 375 (Ex version, only for intrinsically safe current circuits)
  ⑤ = Operation via HART handheld DXR 375 (Ex version, only for non-intrinsically safe current circuits)
  ⑥ = transmitter Promass 80
- F (LN) = Promass F Long-neck version
  (Remote version for heating)
- F (HT) = Promass F high-temperature version

or

Transmitter Promass 80:

- Housing: explosionproof (use only cable entry 1/2" NPT) for use in Cl. I Div. 1 Groups CD or Cl. I Zone 1 Group IIB and Cl. II and III Div. 1 Groups EFG
  Electronics, associated apparatus:
  provides instrinsically safe sensor circuits
- Sensor: intrinsically safe
  Cl. I Div. 1 Groups CD or Cl. I Zone 1 Group IIB and Cl. II and III Div. 1 Groups EFG
  Promass FDN 80...250
  Promass F (HT) High Temperature DN 80
  Promass IDN 50, DN 40 FB (full bore)
  Promass MDN 80
  Promass HDN 50
- Optionally, a version for Groups A and B is available.
- Only the cables supplied by Endress+Hauser may be used between the transmitter and the sensor.
- Ambient-/fluid temperature ranges and temperature class see Page 20.
- ①, ②, ③= Cable entries, for number reference see Page 26.
  ④ = Operation via HART handheld DXR 375
  (Ex version, only for intrinsically safe current circuits)
  ⑤ = Operation via HART handheld DXR 375
  (Ex version, only for non-intrinsically safe current circuits)
  ⑥ = transmitter Promass 80
- F (LN) = Promass F Long-neck version
  (Remote version for heating)
- F (HT) = Promass F high-temperature version

Temperature tables compact version

Max. medium temperature [°C] (at T_a = 45 °C)		T6 85 °C	T5 100 °C	T4A 120 °C	T4 135 °C	T3A 180 °C	T2C 230 °C	T2B 260 °C	T1 450 °C
Promass E	DN 8...50	45	100	120	125	125	125	125	125

Max. medium temperature [°C] (at T_a = 50 °C)		T6 85 °C	T5 100 °C	T4A 120 °C	T4 135 °C	T3A 180 °C	T2C 230 °C	T2B 260 °C	T1 450 °C
Promass F	DN 8...40	55	70	85	100	150	185*	200*	200*
Promass F	DN 50...250	60	70	85	105	150	185*	200*	200*
Promass I	DN 8...25, 15 FB	60	95	95	110	150	150	150	150
Promass I	DN 40...50, 25 FB, 40 FB	70	85	105	120	150	150	150	150
Promass M	DN 8...80	50	60	85	105	150	150	150	150
Promass E	DN 25...50	50	100	120	125	125	125	125	125
Promass H	DN 8	50	65	85	100	140	185	200	200
Promass H	DN 15...50	60	75	100	115	160	200	200	200

Max. medium temperature [°C] (at T_a = 60 °C)		T6 85 °C	T5 100 °C	T4A 120 °C	T4 135 °C	T3A 180 °C	T2C 230 °C	T2B 260 °C	T1 450 °C
Promass A	DN 1...4	60	95	115	130	140	200	200	200
Promass F	DN 8...40	55	70	85	100	150*	185*	200*	200*
Promass F	DN 50...250	60	70	85	100	150*	185*	200*	200*
Promass F, HT	DN 25, 50, 80	70	85	100	115*	160*	205*	235*	350*
Promass I	DN 8...25, 15 FB	60	95	95	110	150*	150*	150*	150*
Promass I	DN 40...50, 25 FB, 40 FB	70	85	105	120	150*	150*	150*	150*
Promass M	DN 8...80	–	60	85	100	100	100	100	100
Promass E	DN 25...50	–	100	120	125	125	125	125	125
Promass H	DN 8	50	65	85	100	140	185*	200*	200*
Promass H	DN 15...50	60	75	100	115	160	200*	200*	200*

* The maximum permissible fluid temperatures apply only when the transmitter is installed in such a way that it is not above the sensor and heat can be removed freely by convection in all directions.

- The minimum **fluid temperature** is –50 °C for Promass A/F/I/M/H, and –40 °C for Promass E.
- The minimum **ambient temperature** is –20 °C. A version for ambient temperatures up to –40 °C is optionally available.

Temperature tables sensor remote version

Max. medium temperature [°C] (at T_a = 45 °C)		T6 85 °C	T5 100 °C	T4A 120 °C	T4 135 °C	T3A 180 °C	T2C 230 °C	T2B 260 °C	T1 450 °C
Promass E	DN 8...50	45	100	120	125	125	125	125	125

Max. medium temperature [°C] (at T_a = 60 °C)		T6 85 °C	T5 100 °C	T4A 120 °C	T4 135 °C	T3A 180 °C	T2C 230 °C	T2B 260 °C	T1 450 °C
Promass A	DN 1...4	60	95	115	130	140	200	200	200
Promass F	DN 8...40	55	70	85	100	150	185	200	200
Promass F	DN 50...250	60	70	85	105	150	185	200	200
Promass F, HT	DN 25, 50, 80	70	85	100	115	160	205	235	350
Promass I	DN 8...25, 15 FB	60	95	95	110	150	150	150	150
Promass I	DN 40...50, 25 FB, 40 FB	70	85	105	120	150	150	150	150
Promass M	DN 8...80	50	60	85	105	150	150	150	150
Promass E	DN 25...50	–	100	120	125	125	125	125	125
Promass H	DN 8	50	65	85	100	140	185	200	200
Promass H	DN 15...50	60	75	100	115	160	200	200	200

- The minimum **fluid temperature** is –50 °C for Promass A/F/I/M/H, and –40 °C for Promass E.
- The minimum **ambient temperature** is –40 °C.

Transmitter

- The Promass 80 (remote version) transmitter has a T6 temperature class rating when installed in the EEx d housing for operation at ambient temperatures up to T_a = 60 °C.
- The minimum **ambient temperature** is –20 °C. A version for ambient temperatures up to –40 °C is optionally available.

✎ **Note!**
At the specified medium temperatures, the equipment is not subjected to temperatures impermissible for the temperature class in question.

Approvals

Nr. / Approval type	Description
160686-1132623 (Special notes, see Page 22)	for the electric flow measuring system Proline Promass 80 Identification: see below

Compact version

P r o m a s s 8 0 * * * – * * * * * * * * * * * * *

A = current HART, frequency
D = current HART, frequency, status, status input
S = current HART (Ex ia) active, frequency (Ex ia)
T = current HART (Ex ia) passive, frequency (Ex ia)
8 = current HART, current, frequency, status input

Promass 83 A	DN 1...4	**XP-IS-DIP I, II, III/1/ABCDEFG**
Promass 83 F	DN 8...50	
Promass 83 F (HT)	DN 25, 50	
Promass 83 F (HT)	DN 25, 50	
Promass 83 M	DN 8...50	
Promass 83 E	DN 8...50	
Promass 83 H	DN 8...40	
Promass 83 F	DN 80...250	**XP-IS-DIP I, II, III/1/CDEFG**
Promass 83 F (HT)	DN 80	(Optionally, a version for Groups A and B is available)
Promass 83 I	DN 50, DN 40 FB	
Promass 83 M	DN 80	
Promass 83 H	DN 50	

Remote version

P r o m a s s 8 0 * * * – * * * * * * * * * * * * *

A = current HART, frequency
D = current HART, frequency, status, status input
S = current HART (Ex ia) active, frequency (Ex ia)
T = current HART (Ex ia) passive, frequency (Ex ia)
8 = current HART, current, frequency, status input

Transmitter

Promass 83		**XP-IS-DIP I, II, III/1/ABCDEFG** or **XP-IS-DIP I, II, III/1/CDEFG**

Sensor

Promass A	DN 1...4	**XP-IS-DIP I, II, III/1/ABCDEFG**
Promass F	DN 8...50	
Promass F (HT)	DN 25, 50	
Promass I	DN 8...40	
Promass M	DN 8...50	
Promass E	DN 8...50	
Promass H	DN 8...40	
Promass F	DN 80...250	**XP-IS-DIP I, II, III/1/CDEFG**
Promass F (HT)	DN 80	(Optionally, a version for Groups A and B is available)
Promass I	DN 50, DN 40 FB	
Promass M	DN 80	
Promass H	DN 50	

Notified body

The measuring system was tested for approval by the following named entity:
CSA (Canadian Standards Association)

Special conditions

1. The flowmeter must be integrated into the potential equalisation system. Potential must be equalized along the intrinsically safe sensor circuits.
2. Control room equipment shall not use or generate more than 250 V rms.
3. Ratings for devices connected to terminals Nos. 26 to 27 of the Promass 80 transmitter must not exceed Um = 250 V and Im = 500 mA: it is impermissible to connect devices with higher ratings to these terminals (Does not apply to Promass 80***-**********S/T with intrinsically safe output circuits).

☝ **Caution!**

4. Use supply wires suitable for 5 °C above ambient temperature, but at least for 80 °C.
5. Class II Group G: The surface temperature of the apparatus cannot exceed 165 °C. The user must limit the process temperature for Group G to 140 °C.
6. Transmitter enclosure G02 explosionproof for use in Cl. I Div. 1 Groups A, B, C, D and dust-ignition proof for Cl. II, III Div. 1 Groups E, F, G. Seal not required fro Groups B, C and D.
7. Sensor circuits intrinsically safe for Cl. I, II, III Div. 1 Group A, B, C, D, E, F, G except
   Promass M DN 80 (sensor version Group C-D)
   Promass I DN 50 (sensor version Group C-D)
   Promass F DN 80/100/150/250 (sensor version Group C-D)
   which are only suitable for Cl. I, II, III Div. 1 Group C, D, E, F, G.
   (optionally, a version for Groups A and B is available)
8. It is not permissible to connect the service adapter in explosive atmospheres.
9. Install per Canadian Electrical Code. Install intrinsically safe circuits per CEC Part I, Section 18, Appendix F, respecting the explosion-proof integrity of the housing.

⚠ **Warning!**

10. Substitution of components may impair intrinsic safety.

General warnings

⚠ **Warning!**

- Installation, connection to the electricity supply, commissioning and maintenance of the devices must be carried out by qualified specialists trained to work on Ex-rated devices..
- Compliance with national regulations relating to the installation of devices in potentially explosive atmospheres is mandatory, if such regulations exist.
- Open the device only when it is de-energized (and after a delay of at least 10 minutes following shutdown of the power supply).
- The housing of the Ex-rated transmitter can be turned in 90° steps. Whereas the non-Ex version has a bayonet adapter, however, the Ex version has a thread. Recesses for centering the worm screw are provided to prevent inadverted movement ot the transmitter housing. It is permissible to turn the transmitter housing through a maximum of 180° during operation (in either direction), without compromising explosion protection. After turning the housing the worm screw must be tightened again.
- The screw cap has to be removed before the local display can be turned, and this must be done with the device de-energized (and after a delay of at least 10 minutes following shutdown of the power supply). Be sure that the device is closed properly, before connecting it to power again.

Electrical connections

Power supply

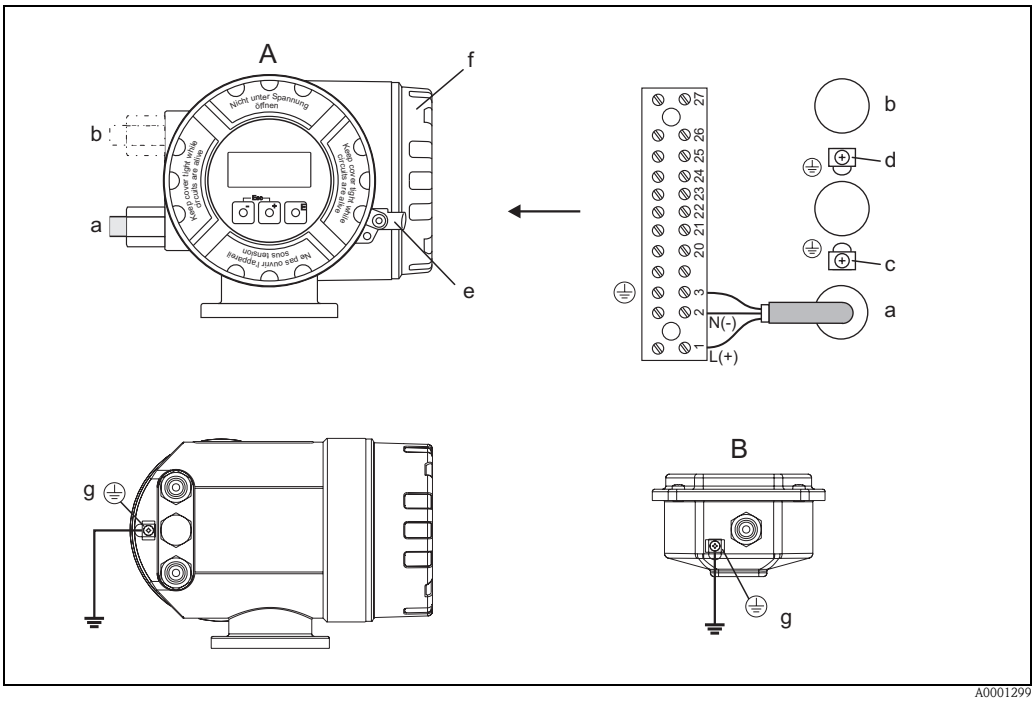

Fig. 6: Ground terminal for potential equalisation

A Transmitter housing (compact or remote version), front view
B Connection housing of remote version

a Power supply cable
b Input/output circuit cable (see Fig. 7)
c Ground terminal for protective earth
d Ground terminal for signal cable shield (see Fig. 7)
e Securing clamp
f Connection compartment cover
g Screw terminal for connecting to potential equalisation

Caution!

- The transmitter (compact and remote version) is to be securely connected to the potential equalization system using the screw terminal on the outside of the transmitter housing.
- With the remote version, the sensor's wiring compartment housing is to be grounded using the external screw terminal . Alternatively, the sensor can be connected to the potential equalization system via the pipeline when a ground connection according to regulations can be assured.

The table below contains the values that are identical for all versions, irrespective of the type code:

Terminals	**1** **L (+)**	**2** **N (–)**	**3**
Designation	Power supply (Fig. 6: a)		Protective earth
Functional Values	AC: U = 85...260 V or AC: U = 20...55 V or DC: U = 16...62 V Power consumption: 15 VA / 15 W		Caution! Follow ground network requirements for facility!
Intrinisically circuit	no		
U_m =	260 V AC		

Input/output circuit

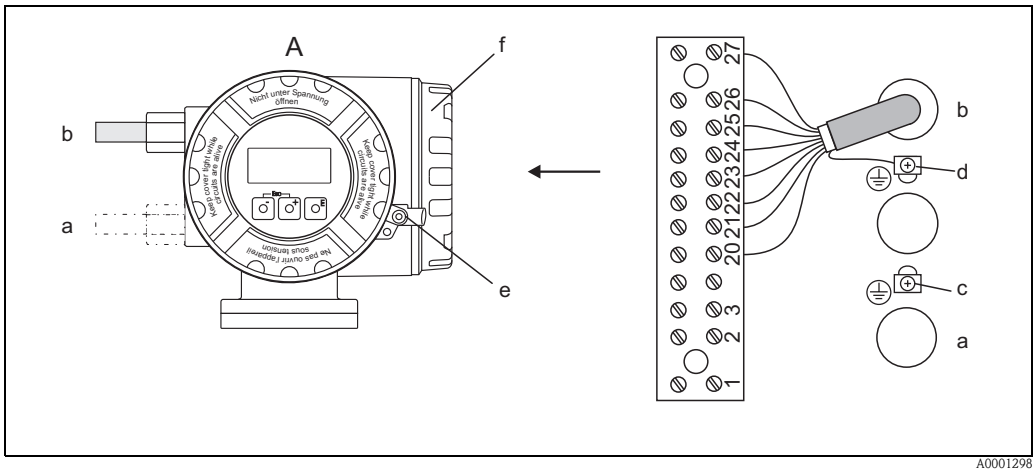

A0001298

Fig. 7: Input/output circuit

A Transmitter housing (compact or remote version), front view

a Power supply cable (see Fig. 6)
b Input/output circuit cable
c Ground terminal for protective earth (see Fig. 6)
d Ground terminal for signal cable shield
e Securing clamp
f Connection compartment cover

✎ **Note!**
The table below contains the values which depend on the type code (type of device). Always remember to compare the type code in the table with the code on the nameplate of your device.

Terminal assignment of input/output circuits with an intrinsically safe circuit

*Transmitter Promass 80***-***********S*

Type code	20 (+)	21 (–)	22 (+)	23 (–)	24 (+)	25 (–)	26 (+)	27 (–)
80***-***********S	–		–		Pulse/frequency output		Current output HART	
Safety-related relevant values								
Intrinsically safe circuit	–		–		Ex ia		Ex ia	
U_o =	–		–				21.8 V DC	
I_o =	–		–				90 mA	
P_o =	–		–				490 mW	
L_o IIC/IIB =	–		–				4.1 mH / 15 mH	
C_o IIC/IIB =	–		–				150 nF / 1160 nF	
[1)] L_o IIC/IIB =	–		–				2 mH / 10 mH	
[1)] C_o IIC/IIB =	–		–				80 nF / 300 nF	
U_i =	–		–		30 V DC		30 V DC [2)]	
I_i =	–		–		300 mA		10 mA [2)]	
P_i =	–		–		600 mW		0.3 W [2)]	
L_i IIC =	–		–		negligible		negligible	
C_i IIC =	–		–		6 nF		6 nF	
Functional values								
	–		–		f = 2...1000 Hz passive: 30 V DC/250 mA		active: 0/4...20 mA R_L HART ≥ 250 Ω	

[1)] Permissible values for simultaneous occurrence of concentrated inductances and capacitances.
[2)] The circuitry must comply with the applicable regulations for electrical installations.

*Transmitter Promass 80***-***********T*

Type code	20 (+)	21 (–)	22 (+)	23 (–)	24 (+)	25 (–)	26 (+)	27 (–)
80***-***********T	–		–		Pulse/frequency output		Current output HART	
Safety-related relevant values								
Intrinsically safe circuit	–		–		Ex ia		Ex ia	
U_i =	–		–		30 V DC		30 V DC	
I_i =	–		–		300 mA		100 mA	
P_i =	–		–		600 mW		1,25 W	
L_i IIC =	–		–		negligible		negligible	
C_i IIC =	–		–		6 nF		6 nF	
Functional values								
	–		–		f = 2...1000 Hz passive: 30 V DC/250 mA		passive: 0/4...20 mA Voltage drop ≤ 9 V $R_L < \frac{V_{supply} - 9\,V}{25\,mA}$	

Terminal assignment of input/output circuits without an intrinsically safe circuit

Type code	20 (+)	21 (–)	22 (+)	23 (–)	24 (+)	25 (–)	26 (+)	27 (–)
80***-***********A					Frequency output		Current output HART	
80***-***********D	Status input		Status output		Frequency output		Current output HART	
80***-***********8	Status input		Frequency output		Current output 2		Current output 1 HART	
Safety-related relevant values								
Intrinsically safe circuit	no							
U_m	260 V AC							
I_m	500 mA							
Functional values → see following Table								

Functional values of input/output circuits without an intrinsically safe circuit

Input/output circuit	Functional values
Current output HART	Active/passive selectable, galvanically isolated, time constant selectable (0.05...100 s), full scale value selectable, temperature coefficient: typically 0.005% o.r./°C, resolution: 0.5 µA ▪ active: 0/4...20 mA, $R_L \geq 250\ \Omega$ ▪ passive: 4...20 mA; supply voltage V_S 18...30 V DC; $R_i \geq 150\ \Omega$
Current output	Active/passive selectable, galvanically isolated, time constant selectable (0.05...100 s), full scale value selectable, temperature coefficient: typically 0.005% o.r./°C, resolution: 0.5 µA ▪ active: 0/4...20 mA, $R_L < 700\ \Omega$ ▪ passive: 4...20 mA; supply voltage V_S 18...30 V DC; $R_i \geq 150\ \Omega$
Impuls/Frequency output	galvanically isolated ▪ passive: Open Collector, 30 V DC, 250 mA ▪ Frequency output Full scale frequency: 2...1000 Hz (f_{max} = 1250 Hz) on/off ratio 1:1; pulse width max. 2 s ▪ Pulse output pulse value and pulse polarity selectable pulse width configurable (0.05...2000 ms)
Status output	galvanically isolated U = 3...30 V DC / 250 mA
Status input	galvanically isolated U = 3...30 V DC; R_i = 5kΩ

Connection of remote version connecting cable

Connection between sensor and transmitter:

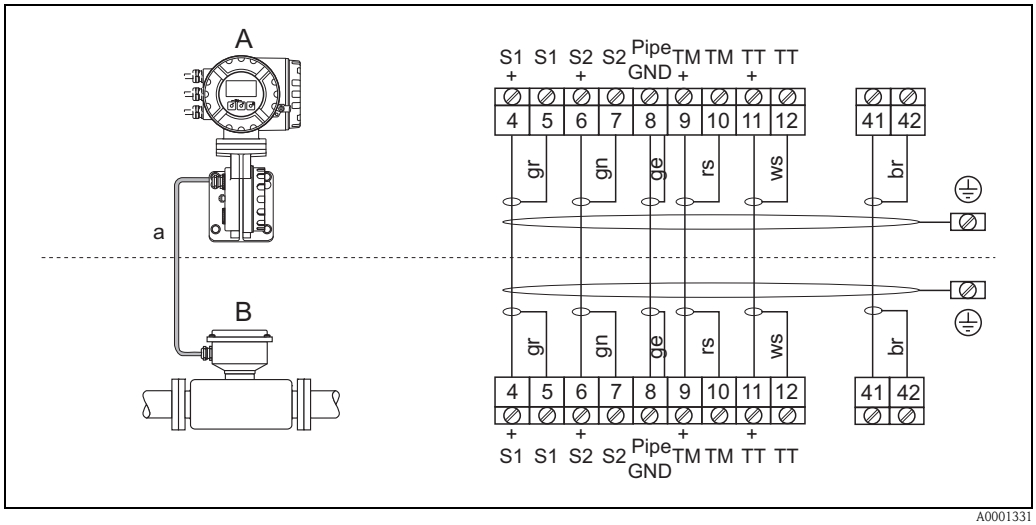

Fig. 8: Connection cable (remote version)

A Transmitter remote version
B Compartment housing remote version

a sensor cable

Service adapter

The service adapter is exclusively for connection to E+H approved service interfaces.

⚠ **Warning!**
It is not permissible to connect the service adapter in explosive atmospheres.

Device fuse

⚠ **Warning!**
Use only fuses of the following types; the fuses are installed on the power supply board:

- Voltage 20...55 V AC / 16...62 V DC:
  fuse 2.0 A slow-blow, disconnect capacity 1500 A
  (Schurter, 0001.2503 or Wickmann, Standard Type 181 2.0 A)
- Voltage 85...260 V AC:
  fuse 0.8 A slow-blow, disconnect capacity 1500 A
  (Schurter, 0001.2507 or Wickmann, Standard Type 181 0.8 A)

Cable entries

Number reference for Figures on Page 21 and Page 21:

①	Cable entries for the transmitter terminal compartment (XP version) power supply / bus cable: (Promass 80***-******N/P*****) Choice of thread for cable entries, ½" NPT. Make sure that the XP cable glands/entries are secured to prevent working loose and that the seals are installed immediately adjacent to the housing, if required.
②, ③	Cable entries for the transmitter terminal compartment (remote version) sensor cable connection: Choice of thread for cable entry, ½" NPT.

Cable specifications

The sensor cable connection between sensor and transmitter has an IS type of protection rating.

☝ **Caution!**
Use only the cable sets supplied by E+H.

Technical data

Dimensions

- The dimensions of the Ex-transmitter housing (remote version) can be seen in the following illustration. The dimensions of the Ex-transmitter housing in the compact version are also contained in this.
- The dimensions of the transmitter correspond to the standard versions. Please find these dimensions in the Technical Information.
- Weight + approx. 2 kg more than the standard version (see Technical Information).

✎ **Note!**

Applicable "Technical Information":
- Promass 80/83 A → TI054D
- Promass 80/83 E → TI061D
- Promass 80/83 F, M → TI053D
- Promass 80/83 I, H → TI052D

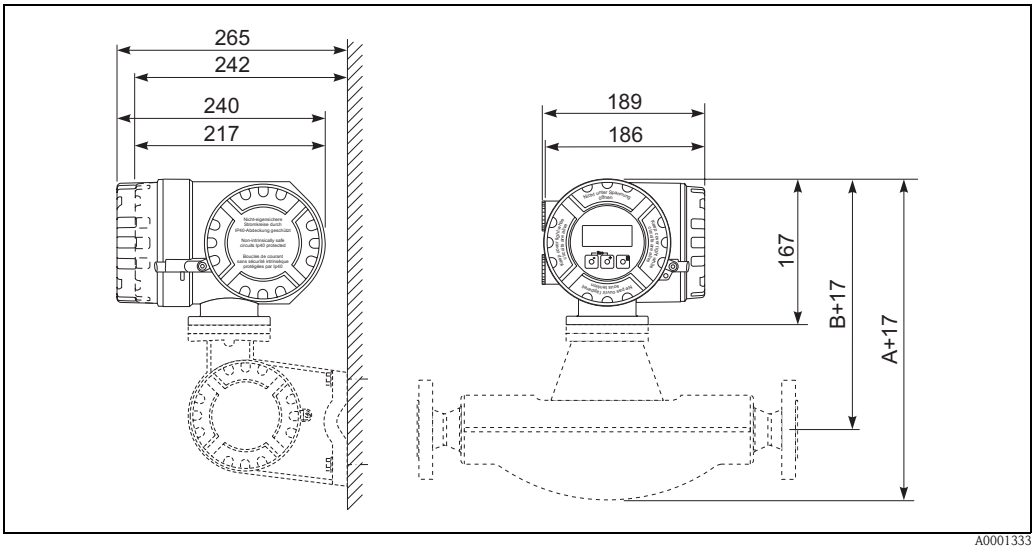

Fig. 9: Dimensions of the Ex-transmitter housing

Device identification

Promass 80 transmitter and A/F/I/M/E/H sensor

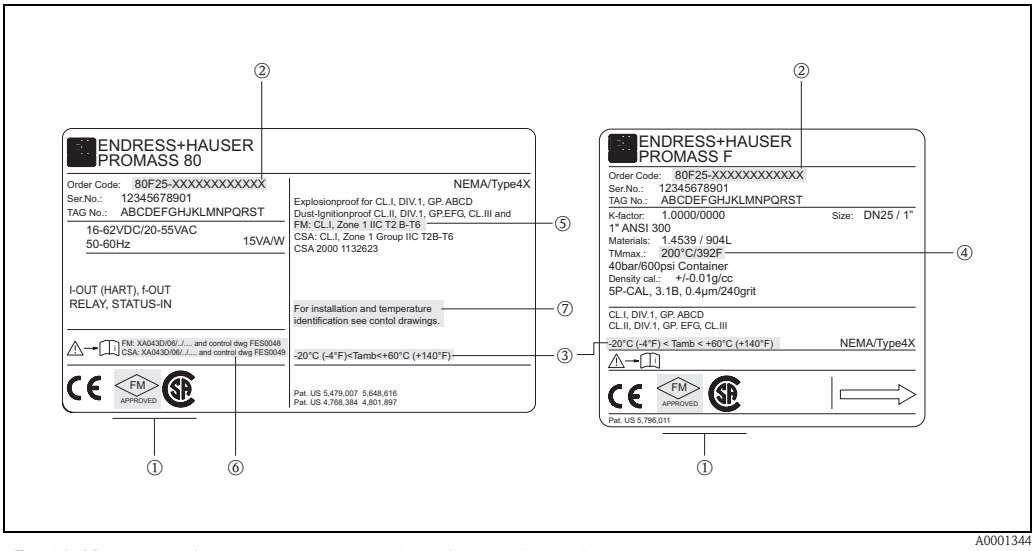

A0001344

Fig. 10: Nameplate of transmitter and nameplate of sensor (example)

1 *Label of the notified body: Factory Mutual Research*
2 *Type code*
3 *Ambient temperature range*
4 *Maximum medium temperature*
5 *Type of protection and explosion group for the measuring system*
6 *Applicable Ex documentation*
7 *Warning*

Control drawings

Endress+Hauser Reinach hereby declares that the product is in conformity with the requirements of the CSA (Canadian Standards Association).

Hazardous Locations
Class I Division 1 Groups ABCD or Class I Zone 1 Groups IIC and Class II and III Division 1 Groups EFG

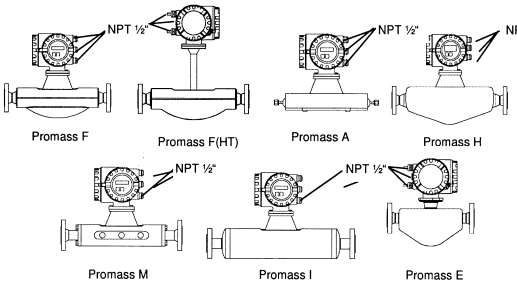

WARNING: SUBSTITUTION OF COMPONENTS MAY IMPAIR INTRINSIC SAFETY.

Temperature table	max. medium temperature [°C]								
	T6	T5	T4A	T4	T3A	T2C	T2B	T2	T1
Ta = 45°C:									
PROMASS E DN8/15/25/40/50	45	100	120	125	125	125	125	125	125
Ta = 50°C:									
PROMASS M DN8/15/25/40/50/80	50	60	85	105	150	150	150	150	150
PROMASS F DN8/15/25/40	55	70	85	100	150	185*	200*	200*	200*
PROMASS F DN50/80/100/150/250	60	70	85	105	150	185*	200*	200*	200*
PROMASS I DN8/15/16/25	60	95	95	110	150	150	150	150	150
PROMASS I DN26/40/41/50	70	85	105	120	150	150	150	150	150
PROMASS H DN8	50	65	85	100	140	185	200	200	200
PROMASS H DN15/25/40/50	60	75	100	115	160	200	200	200	200
Ta = 60°C:									
PROMASS A DN1/2/4	60	95	115	130	140	200	200	200	200
PROMASS M DN8/15/25/40/50/80	---	60	85	100	100	100	100	100	100
PROMASS F DN8/15/25/40	55	70	85	100	150*	185*	200*	200*	200*
PROMASS F DN50/80/100/150/250	60	70	85	100	150*	185*	200*	200*	200*
PROMASS I DN8/15/16/25	60	95	95	110	150*	150*	150*	150*	150*
PROMASS I DN26/40/41/50	70	85	105	120	150*	150*	150*	150*	150*
PROMASS H DN8	50	65	85	100	140	185*	200*	200*	200*
PROMASS H DN15/25/40/50	60	75	100	115	160	200*	200*	200*	200*
PROMASS E DN8/15/25/40/50	---	100	120	125	125	125	125	125	125
PROMASS F(HT) DN25/50/80	70	85	100	115*	160*	205*	235*	275*	350*

* Device shall not be installed in such way that the transmitter enclosure is located above the sensor.

Tm min. is –40°C for Promass E — Ta min. is –20°C
Tm min. is –50°C for Promass A/F/H/I/M — Ta min. is –20°C

Communication Options	Control Drawing
I/O option = F,H,J	see FES 0049-0001
I/O option = G,K	see FES 0049-0002
I/O option = S,T	see FES 0049-0004
I/O option = R,U	see FES 0049-0005

Notes:
1. Control room equipment shall not use or generate more than 250 V rms.
2. Caution: Use supply wires suitable for 5 °C above ambient temperature, but at least for 80 °C / 176°F.
3. Class II Group G: The surface temperature of the apparatus cannot exceed 165 °C / 329°F. The user must limit the process temperature for Group G to 140°C.
4. Transmitter enclosure PROline G02 explosionproof for use in Cl. I Div. 1 Groups A, B, C, D and dust-ignitionproof for Cl. II, III Div. 1 Groups E, F, G
5. Transmitter enclosure PROline G02 is factory sealed for use in Cl. I Div. 1 Groups B, C, D. Means that a conduit seal is not required within 18 inches (450mm) of the enclosure.
6. Sensor circuits intrinsically safe for Cl. I, II, III Div. 1 Group A, B, C, D, E, F, G except limited versions of
   PROMASS M DN80 (sensor version Group C-D)
   PROMASS I DN50 (sensor version Group C-D)
   PROMASS F DN80/100/150/250 (sensor version Group C-D)
   PROMASS H DN50 (sensor version Group C-D)
   which are only suitable for Cl. I, II, III Div. 1 Group C, D, E, F, G
7. The minimum medium temperautre is –50°C
8. Install all Intrinsically Safe Circuits per Canadian Electrical Code Part I Section 18 and Appendix F.

Aenderungen:					
A	27.11.01 /MDI	F		Alle gesetzlichen Urheberrechte vorbehalten. Diese Zeichnung darf ohne unsere Genehmigung weder vervielfältigt werden noch dritten Personen und Konkurrenzfirmen zugängig gemacht werden.	
B	07.06.02/MDI	G			
C	29.10.02 /MDI	H			
D	09.06.03/UD	J			
E	27.04.04/MDI	K			

Ersteller: FES / **ID 1089**
FILE: M:\ZEICHNG\FES0049\E\040323csa.doc

CSA Control Drawing Div. 1 / Zone 1
Class I Zone 1
Compact Version
PROMASS 40 / 8. A / F / I / M / H / E

Massstab			
	Gezeichnet	09.10.00	Bn
	Geprüft		
	Ex-geprüft	27.04.04	MDI
	Gesehen		

Flowtec AG, Kaegenstrasse 7, CH-4153 Reinach BL1, Postfach

FES0049 E 1/2

F06-8xMBxxZZ-01-xx-xx-en-011

Hazardous Locations
Class I Division 1 Groups ABCD or Class I Zone 1 Groups IIC and Class II and III Division 1 Groups EFG

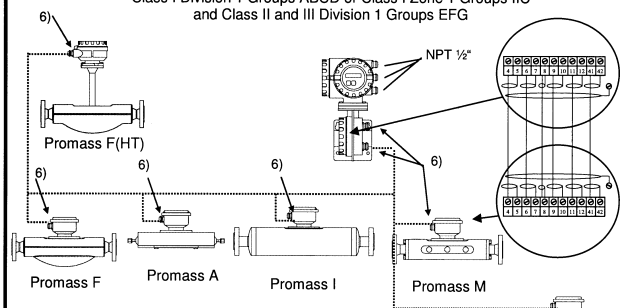

Temperature table	max. medium temperature [°C]								
	T6	T5	T4A	T4	T3A	T2C	T2B	T2	T1
Ta = 45 °C									
PROMASS E DN25/40/50	45	100	120	125	125	125	125	125	125
Ta = 60 °C									
PROMASS A DN1/2/4	60	95	115	130	140	200	200	200	200
PROMASS M DN8/15/25/40/50/80	50	60	85	105	150	150	150	150	150
PROMASS F DN8/15/25/40	55	70	85	100	150	185	200	185	200
PROMASS F DN50/80/100/150/250	60	70	85	105	150	185	200	185	200
PROMASS I DN8/15/16/25	60	95	95	110	150	150	150	150	150
PROMASS I DN26/40/41/50	70	85	105	120	150	150	150	150	150
PROMASS H DN8	50	65	85	100	140	185	200	185	200
PROMASS H DN15/25/40/50	60	75	100	115	160	200	200	200	200
PROMASS E DN8/15/25/40/50	-	100	120	125	125	125	125	125	125
PROMASS F(HT) DN25/50/80	70	85	100	115	160	205	235	275	350

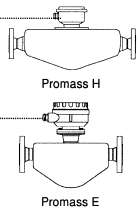

The ambient temperature is –20°C ... +60°C for the transmitter and –40°C ... +60°C for the sensor

The minimum medium temperature is–50°C . A special version of Promass A/F/H is suitable for medium temperatures down to –200°C.The minimum medium temperature for Promass E is limited to –40 °C

WARNING: SUBSTITUTION OF COMPONENTS MAY IMPAIR INTRINSIC SAFETY.

Notes:
1. Control room equipment shall not use or generate more than 250 V rms.
2. Caution: Use supply wires suitable for 5 °C above ambient temperature, but at least for 80 °C / 176°F.
3. Class II Group G: The surface temperature of the apparatus cannot exceed 165 °C / 329°F. The user must limit the process temperature for Group G to 140°C.
4. Transmitter enclosure PROline G02 explosionproof for use in Cl. I Div. 1 Groups A, B, C, D and dust-ignitionproof for Cl. II, III Div. 1 Groups E, F, G
5. Transmitter enclosure PROline G02 is factory sealed for use in Cl. I Div. 1 Groups B, C, D. Means that a conduit seal is not required within 18 inches (450mm) of the enclosure.
6. Sensor circuits intrinsically safe for Cl. I, II, III Div. 1 Group A, B, C, D, E, F, G except a limited version of
   PROMASS M DN80 (sensor version Group C-D)
   PROMASS I DN50 (sensor version Group C-D)
   PROMASS F DN80/100/150/250 (sensor version Group C-D)
   PROMASS H DN50 (sensor version Group C-D)
   which are only suitable for Cl. I, II, III Div. 1 Group C, D, E, F, G
7. Allowed cable glands: NPT ½", G ½", M20x1.5 or PG13.5
8. A sensor which was connected to a Promass 60/63/64 trans-mitter can also be installed to a Promass 8. transmitter. For this case this control drawing is relevant for safe use , except the minimum ambient temperature which is limited to –20°C.
9. Install all Intrinsically Safe Circuits per Canadian Electrical Code Part I Section 18 and Appendix F.

Aenderungen:					
A	27.11.01 / MDI	F		Alle gesetzlichen Urheberrechte vorbehalten. Diese Zeichnung darf ohne unsere Genehmigung weder vervielfältigt werden noch dritten Personen und Konkurrenzfirmen zugängig gemacht werden.	
B	07.06.02 / MDI	G			
C	29.10.02 /MDI	H			
D	09.06.03/UD	J			
E	27.04.04/MDI	K			

Ersteller: FES / **ID 1089**
FILE: M:\ZEICHNG\FES0049\E\040323csa.doc

CSA Control Drawing Div. 1 / Zone 1
Class I Zone 1
Remote Version
PROMASS 40 / 8. A / F / I / M / H / E

Massstab			
	Gezeichnet	09.10.00	Bn
	Geprüft		
	Ex-geprüft	27.04.04	MDI
	Gesehen		

Flowtec AG, Kaegenstrasse 7, CH-4153 Reinach BL1, Postfach

FES0049 E 2/2

F06-8xMBxxZZ-01-xx-xx-en-012

NON HAZARDOUS LOCATION

HAZARDOUS LOCATION

Class I Zone 1 IIC
Cl. I, II, III Div. 1 Group A,B,C,D,E,F,G or
Cl. I Div. 2 Group A,B,C,D, and Cl.II,III Div.1 Group E,F,G

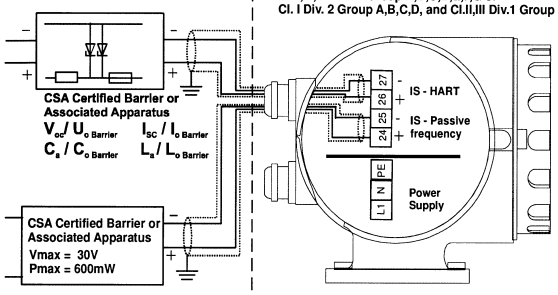

Type: PROMASS 8 **-***********T**
PROMASS 40* **-*********T**

Terminals: 26, 27 (HART current output):
Passive intrinsically safe circuit:

V_{max} / U_i	I_{max} / I_i	P_{max} / P_i	C_i	L_i
30 V	100 mA	1.25 W	6 nF	negligible

Connect to entity approved Barrier with
V_{OC} or $U_O \leq V_{max}$ / U_i
I_{SC} or $I_o \leq I_{max}$ / I_i
Cable parameters for Intrinsic Safety:
$C_{cable} \leq C_{a\ Barrier}$ or $C_{O\ Barrier} - 6$ nF
$L_{cable} \leq L_{a\ Barrier}$ or $L_{O\ Barrier}$

Terminals 24, 25 (Passive intrinsically safe circuit):

V_{max} / U_i	I_{max} / I_i	P_{max} / P_i	C_i	L_i
30 V	300 mA	600mW	6 nF	0

Entity approved apparatus must meet the follwoing requirements:
V_{OC} or $U_O \leq V_{max}$ P_{max} or $P_O \leq P_{max}$ / P_i
Cable parameters for Intrinsic Safety:
$C_{cable} \leq C_a$ (C_o) – 6 nF $L_{cable} \leq L_a$ (L_o)

Notes:
1) Use supply wires suitable for 5 °C above surrounding ambient, but at least for 80°C / 176°F

Intrinsically safe signal output:
2) Install all intrinsically safe cricuits per Canadian Electrical Code respecting the Explosionproof Integrity of the enclosure
3) **WARNING**: SUBSTITUTION OF COMPONENTS MAY IMPAIR INTRINSIC SAFETY.
4) Control room equipment may not use or generate more than 250 Vrms.

Type: PROMASS 8 **-***********S**
PROMASS 40* **-*********S**

Terminals: 26, 27 (HART current output):
Active intrinsically safe circuit:

V_{OC} / U_O	I_{SC} / I_O	P_{max} / P_O	C_a / C_o	L_a / L_o
21.8 V	90 mA	490 mW	0.15 µF	4.1 mH

V_{max} / U_i	I_{max} / I_i	P_{max} / P_i	C_i	L_i
30 V	10 mA	300 mW	6 nF	0

Cable parameters for Intrinsic Safety:
$C_{cable} \leq 0.15$ µF if V_{oc} / U_o (of Barrier) ≤ 21.8 V
$C_{cable} \leq C_a$ / $C_{o\ Barrier} - 6$ nF if V_{oc} / U_o (of Barrier) ≥ 21.8 V
$L_{cable} \leq 4.1$ mH

Terminals 24, 25 (Passive intrinsically safe circuit):

V_{max} / U_i	I_{max} / I_i	P_{max} / P_i	C_i	L_i
30 V	300 mA	600mW	6 nF	0

Entity approved supply must meet the following requirements:
V_{OC} or $U_O \leq V_{max}$ / U_i P_{max} or $P_O \leq P_{max}$ / P_i
Cable parameters for Intrinsic Safety:
$C_{cable} \leq C_a$ (C_O) – 6nF $L_{cable} \leq L_a$ (L_O)

Aenderungen:					
	A	27.11.01 / MDI	F		
	B	07.06.02 / MDI	G		
	C	29.10.02 /MDI	H		
	D	09.06.03/UD	J		
	E	27.04.04/MDI	K		

Alle gesetzlichen Urheberrechte vorbehalten. Diese Zeichnung darf ohne unsere Genehmigung weder vervielfältigt werden noch dritten Personen und Konkurrenzfirmen zugängig gemacht werden.

Ersetzt durch:
Ersatz für:
Ersteller: FES / **ID 1089**
File: M:\ZEICHNG\FES0049\E\040323csa.doc

CSA CONTROL DRAWING Cl.1, Div. 1
PROMASS 40 / 8. A / F / I / M / H / E
Entity concept Commodul HART IS (Option S/T)

Massstab			
	Gezeichnet	09.10.00	Bn
	Geprüft		
	Ex-geprüft	27.04.04	MDI
	Gesehen		

Flowtec AG, Kaegenstrasse 7, CH-4153 Reinach BL1, Postfach

FES0049-0004 E

F06-8xMBxxZZ-01-xx-xx-en-016

www.endress.com/worldwide

Endress+Hauser

People for Process Automation

XA043D/06/en/01.05
Nr. 50098482
FM+SGML6.0