Level Pressure Flow Temperature Liquid Analysis Registration Systems Components Services Solutions

Safety Instructions

CNGmass DCI

Division 1

C US

en Document: XA000137D
Safety instructions for electrical apparatus for explosion-hazardous areas classified according to the National Electrical Code (NEC) and Canadian Electrical Code (CEC)

XA00137D/06/EN/13.12
71146634

Endress+Hauser
People for Process Automation

CNGmass DCI

Table of contents

Associated documentation 3
Supplementary documentation 3
Approvals 4
Order code 4
Safety instructions: General 6
Safety instructions: Mounting 6
Safety instructions: Installation 7
Temperature tables: Compact version 8
Temperature table: Remote version 8
Connection data: Power supply 9
Connection data: Signal circuits (intrinsically safe circuits) 9
Connection data: Signal circuits (non-intrinsically safe circuits) 10
Additional technical information 11

Associated documentation

This document is an integral part of the following Operating Instructions:

- HART
  - BA00138D, CNGmass DCI
- Modbus RS485
  - BA00140D, CNGmass DCI Modbus RS485

The Operating Instructions pertaining to the device apply.

Supplementary documentation

Explosion-protection brochure:
CP021Z/00

The Explosion-protection brochure is available:
- In the download area of the Endress+Hauser website (www.endress.com)

Approvals

General

The system meets the fundamental health and safety requirements for the design and construction of devices and protective systems intended for use in potentially explosive atmospheres in accordance with the National Electrical Code (NEC) and Canadian Electrical Code (CEC).

No. / approval type

160686-1132623

Notified body

CSA: Canadian Standard Association

Identification

The identification of the system must contain the following specifications:

CSA	CSA_{US}
■ Class I, Groups ABCD ■ Class I, Zone 1, Group IIC ■ Class II, Groups EFG ■ Class III	■ XP-IS-DIP / I, II, III / 1 / ABCDEFG / T6-T1

Caution!

■ The installation instructions for the safe use of the system must be observed: → 7.

Order code

The order code is indicated on the nameplate, which is affixed to the device in such a way that it is clearly visible.
Additional information on the nameplate is provided in the associated Operating Instructions.

Structure of the order code

* * * * *	–	* * * * * * * * * * * *	+	A* B* C* D* E* F* G* H* I* J* …
Device type		Basic specifications		Optional specifications

* Placeholder: An option (number or letter) that depends on the device specification is displayed instead of the placeholders.

- Device type
  The device type section of the order code describes the device and the device construction.
- Basic specifications
  The features that are absolutely essential for the device (mandatory features) are specified in the basic specifications. The number of positions depends on the number of features available. The selected option of a feature can consist of several positions.
- Optional specifications
  The optional specifications describe additional features for the device (optional features). The number of positions depends on the number of features available. The features have a 2-digit structure to aid identification (e.g. JE). The first digit (ID) stands for the feature group (e.g. J = test, certificate) and consists of a number or a letter. The second digit constitutes the value that stands for the feature within the group (e.g. E = NACE).

More detailed information on the device is provided in the following tables. These tables describe the individual positions or IDs in the order code which are relevant to hazardous areas.

Device type

Position		Selected option	Description
1	Instrument family	8	Coriolis flow measuring system
2	Electronics	D	CNGmass DCI 8DF transmitter
3	Sensor	F	Promass FP
4 5	Nominal diameter	08 (¾"), 15 (½"), 25 (1")	Nominal diameter of the sensor

Basic specifications

Position		Application/zone		
13	Approval	M	Compact/ Remote version	■ Class I, Groups ABCD ■ Class I, Zone 1, Group IIC ■ Class II, Groups EFG ■ Class III
14	Housing	A	Compact version	Min. ambient temperature $T_{a\ min}$ = –20 °C (–4 °F)
		1, 4		Min. ambient temperature $T_{a\ min}$ = –40 °C (–40 °F)
		E, F	Remote version	Min. ambient temperature $T_{a\ min}$ = –20 °C (–4 °F)
		7, 8		Min. ambient temperature $T_{a\ min}$ = –40 °C (–40 °F)
15	Cable entry	A		Thread: M20 × 1.5
		B		Thread: NPT ½"
		C		Thread: G ½"
18	Inputs/ outputs	D, M, N, Q, 1, 2, 7		Non-intrinsically safe outputs
		S, T		Intrinsically safe outputs

✎ Note!
For a detailed explanation of these values, regarding the available outputs and inputs, as well as a description of the associated terminal assignments and connection data: → 🗎 9 onwards.

Safety instructions: General

- Install all intrinsically safe circuits per Canadian Electrical Code (CEC) Part I Section 18 and Appendix F resp. per National Electrical Code (NEC) ANSI/ NFPA 70 and ISA RP 12.6 respecting the explosionproof integrity of the enclosure.
- Control room equipment shall not use or generate more than 250 V rms.
- The device must be integrated into the potential equalization system.
- It is not permissible to connect the service adapter whilst the atmosphere is considered to be explosive.
- Use of the devices is restricted to mediums against which the process-wetted materials are adequately resistant.
- Class II Group G: The surface temperature of the apparatus cannot exceed 165 °C (329 °F). The user must limit the process temperature for Group G to 140 °C (284 °F).
- Use supply wires suitable for 5 °C above ambient temperature, but at least for 80 °C (176 °F).
- Transmitter enclosure G02 explosionproof for use in Class 1 Division 1 Groups A, B, C, D (seals not required) and dust-ignition proof for Class II, III Division 1 Groups E, F, G.
- Sensor circuits intrinsically safe for Cl. I, II, III Div. 1 Group A, B, C, D, E, F, G.
- Substitution of components may impair intrinsic safety.
- Installation, connection to the electricity supply, commissioning and maintenance of the devices must be carried out by qualified specialists trained to work on Ex-rated devices.
- Compliance with national regulations relating to the installation of devices in potentially explosive atmospheres is mandatory, if such regulations exist.

Safety instructions: Mounting

Turning the local display

The electronics compartment cover may only be removed when the device is de-energized (after a delay of at least 10 minutes following shutdown of the power supply).

Turning the transmitter housing

1. Unscrew the grub screw.
2. Rotate the transmitter housing cautiously clockwise until the end stop (end of the thread).
3. Rotate the transmitter counterclockwise (max. 360°) to the desired position.
4. Tighten the grub screw again.

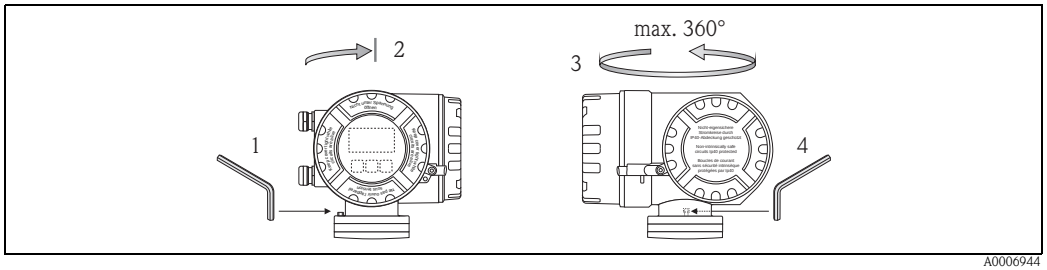

Fig. 1: Turning the transmitter housing

Safety instructions: Installation

- For terminals No. 20 to No. 27 of the transmitter, only devices with ratings $U_m \leq 260$ V and $I_m \leq 500$ mA are allowed to be connected (does not apply to intrinsically safe circuits).
- The measuring device must only be used in the permitted temperature class.
  The values of the individual temperature classes can be found in the temperature tables: → 📄 8.

Cable entries

① Cable entries for transmitter terminal compartment (XP version) power supply/communication cable.
Choice of thread for cable entry: ½" NPT.

Make sure that the XP cable glands/entries are secured to prevent working loose.

② For remote version connecting cable:
Choice of thread for cable entry: ½" NPT.

Cable specification

You can find information about the cable specification in the associated Operating Instructions.

Potential equalization

The transmitter (compact and remote version) must be safely integrated into the potential equalization via the screw terminal on the outside of the transmitter housing. Alternatively, the transmitter of the compact version can be integrated into the potential equalization via the pipeline as long as the pipeline provides a ground connection conforming to regulations.

✎ Note!
Further information about potential equalization, screening and grounding can be found in the associated Operating Instructions.

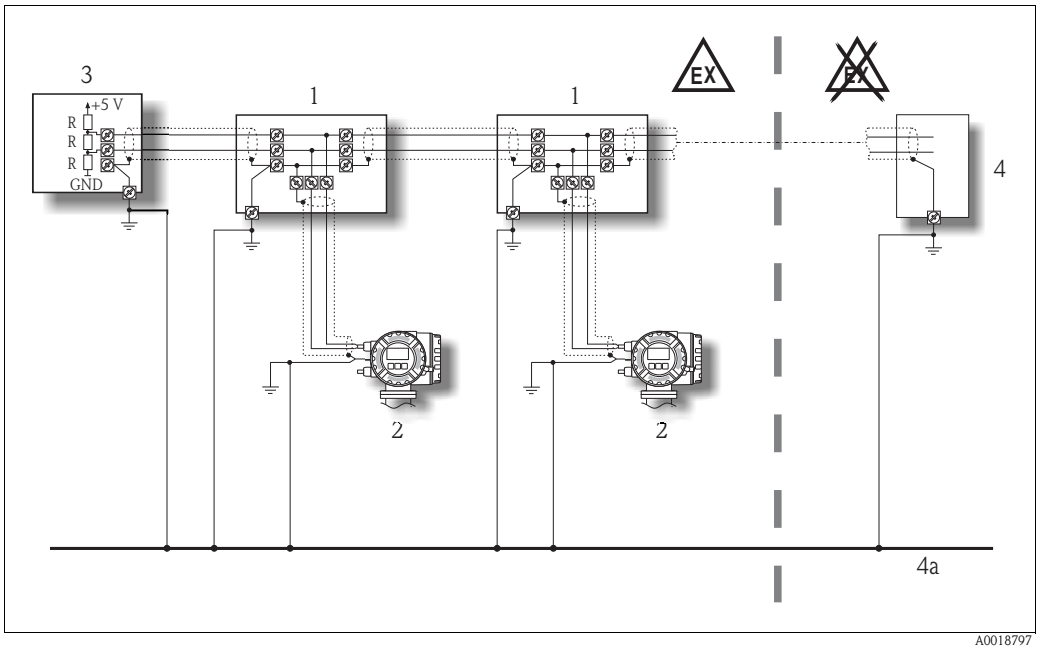

Fig. 2: Example for connecting potential equalization lines

1 Distributor/T-Box
2 Bus devices for potentially explosive atmospheres
3 Bus terminator Modbus
4 Bus supply unit or automation system
4a Potential matching line is fed out into the safe area

Temperature tables: Compact version

Ambient temperature

The minimum ambient temperature T_a is –20 °C (-4 °F).
A version for ambient temperatures T_a up to –40 °C (-40 °F) is optionally available.

Medium temperature

The minimum medium temperature is –50 °C (-58 °F).

Max. medium temperature [°C] ([°F]) for T1-T6 in relation to the maximum ambient temperature T_a

	Nominal diameter [mm] ([in])	**T_a** [°C] ([°F])	**T6** 85 °C (185 °F)	**T5** 100 °C (212 °F)	**T4** 135 °C (275 °F)	**T3** 200 °C (392 °F)	**T2** 300 °C (572 °F)	**T1** 450 °C (842 °F)
CNGmass DCI 8DF**-…	08 (3/8")	+60 (+140)	–	80 (176)	130 (266)	130 (266)	150 (302)	150 (302)
	15 (½")			80 (176)		130 (266)		
	25 (1")			95 (203)		150 (302)		

Temperature table: Remote version

Ambient temperature

The remote version transmitter has a T6 temperature class rating when installed in the Ex d housing for operation at ambient temperatures up to T_a = 60 °C (140 °F). The maximum ambient temperature range is –20 to +60 °C (-4 to +140 °F). A version for ambient temperatures T_a up to –40 °C (-40 °F) is optionally available.

Medium temperature

The minimum medium temperature is –50 °C (-58 °F).

Max. medium temperature [°C] ([°F]) for T1-T6 in relation to the maximum ambient temperature T_a

	Nominal diameter [mm] ([in])	**T_a** [°C] ([°F])	**T6** 85 °C (185 °F)	**T5** 100 °C (212 °F)	**T4** 135 °C (275 °F)	**T3** 200 °C (392 °F)	**T2** 300 °C (572 °F)	**T1** 450 °C (842 °F)
CNGmass DCI 8DF**-…	08 (3/8")	+60 (+140)	–	80 (176)	130 (266)	130 (266)	150 (302)	150 (302)
	15 (½")			80 (176)		130 (266)		
	25 (1")			95 (203)		150 (302)		

Connection data: Power supply

All transmitters	1 L (+)	2 N (–)	⏚
Designation	Supply voltage		Protective earth
Functional values	AC: U = 85 to 260 V; AC: U = 20 to 55 V DC: U = 16 to 62 V Power consumption: 15 VA / 15 W		Caution! Pay attention to the grounding concepts of the plant!
Intrinsically safe circuit	no		
U_m	260 V AC		

Connection data: Signal circuits (intrinsically safe circuits)

✎ Note!
The following tables contain values/specifications that depend on the transmitter type code and the input and output assignment. Please compare the following data to the information shown on the nameplate of your measuring device.

Terminal assignment for CNGmass DCI 8DF transmitter; Specifications position 12 (inputs/outputs) = S+##**

Terminal assignment	Terminal No.							
	20 (+)	21 (–)	22 (+)	23 (–)	24 (+)	25 (–)	26 (+)	27 (–)
Assignment	–		–		Pulse/frequency output, passive		Current output HART, active	
Electric circuit	–		–		intrinsically safe		intrinsically safe	
Safety-related values	–		–		U_i I_i P_i L_i C_i	30 V DC 500 mA 600 mW negligible 6 nF	U_o I_o P_o L_o IIC/IIB C_o IIC/IIB [1] L_o IIC/IIB [1] C_o IIC/IIB U_i I_i P_i L_i C_i	21.8 V DC 90 mA 491 mW 4.1 mH/15 mH 160 nF/1160 nF 2 mH/10 mH 80 nF/300 nF 30 V DC [2] 10 mA [2] 0.3 W [2] negligible 6 nF
Functional values	–		–		galvanically isolated, passive: 30 V DC / 250 mA Open Collector Full scale frequency 2 to 5000 Hz		galvanically isolated, active: 0/4 to 20 mA $R_L < 400\ \Omega$ R_L HART $\geq 250\ \Omega$	

[1]) Permitted values in the event of simultaneous occurrence of concentrated inductances and capacitances.
[2]) The interconnection must be assessed according to the valid construction provisions.

Terminal assignment for CNGmass DCI 8DF transmitter; basic specifications position 12 (inputs/outputs) = T+##**

Terminal assignment	Terminal No.							
	20 (+)	21 (–)	22 (+)	23 (–)	24 (+)	25 (–)	26 (+)	27 (–)
Assignment	–		–		Pulse/frequency output, passive		Current output HART, passive	
Electric circuit	–		–		intrinsically safe		intrinsically safe	
Safety-related values	–		–		U_i I_i P_i L_i C_i	30 V DC 500 mA 600 mW negligible 6 nF	U_i I_i P_i L_i C_i	30 V DC 100 mA 1.25 W negligible 6 nF
Functional values	–		–		galvanically isolated, passive: 30 V DC / 250 mA Open Collector Full scale frequency 2 to 5000 Hz		galvanically isolated, passive: 4 to 20 mA voltage drop ≤ 9 V $R_L < [(V_{p.\ supply} - 9\ V) \div 25\ mA]$	

Connection data: Signal circuits (non-intrinsically safe circuits)

✎ Note!
The following tables contain values/specifications that depend on the transmitter type code and the input and output assignment. Please compare the following data to the information shown on the nameplate of your measuring device.

Terminal assignment for CNGmass DCI 8DF

Safety-related and functional values of signal circuits: → 🗎 10

Order characteristic "Inputs/outputs" Basic specifications position 3	Terminal No.							
	20 (+)	21 (–)	22 (+)	23 (–)	24 (+)	25 (–)	26 (+)	27 (–)
Non-convertible communication boards (fixed assignment)								
Q	–		–		Status input		Modbus RS485[1] B	A
Convertible communication boards								
D	Status input		Relay output		Pulse/frequency output		Current output HART	
M	Status input		Pulse/frequency output 2		Pulse/frequency output 1		Current output HART	
N	Current output		Pulse/frequency output		Status input		Modbus RS485[1] B	A
1	Relay output		Pulse/frequency output 2		Pulse/frequency output 1		Current output HART	
2	Relay output		Current output 2		Pulse/frequency output		Current output 1 HART	
7	Relay output 2		Relay output 1		Status input		Modbus RS485[1] B	A

Safety-related and functional values of signal circuits, see Page 10

[1] *Modbus RS485:*
– Terminal 26 (+) → B (RxD/TxD-P)
– Terminal 27 (–) → A (RxD/TxD-N)

Safety-related and functional values of signal circuits

Signal circuits	Functional values	Safety-related values
Current output HART Current output	Galvanically isolated, active/passive can be selected: ■ Active: 0/ 4 to 20 mA, R_L < 700 Ω, R_L HART ≥ 250 Ω ■ Passive: 4 to 20 mA, V_s = 18 to 30 V DC, R_i ≥ 150 Ω	intrinsically safe = no U_m = 260 V I_m = 500 mA
	Galvanically isolated, active/passive can be selected: ■ Active: 0/4 to 20 mA, R_L < 700 Ω ■ Passive: 4 to 20 mA, V_s = 18 to 30 V DC, R_i ≥ 150 Ω	
Pulse/frequency output	Galvanically isolated, active/passive can be selected: ■ Active: 24 V DC / 25 mA (max. 250 mA during 20 ms), R_L > 100 Ω ■ Passive: 30 V DC / 250 mA, open collector End frequency 2 to 10 000 Hz (f_{max} = 12 500 Hz)	
Relay output	galvanically isolated, max. 30 V AC / 500 mA max. 60 V DC / 100 mA	
Current input	Galvanically isolated, active/passive can be selected: ■ Active: 4 to 20 mA, R_i ≤ 150 Ω, U_{out} = 24 V DC, short-circuit proof ■ Passive: 0/4 to 20 mA, R_i < 150 Ω, U_{max} = 30 V DC	
Status input	*Basic specifications, position 3 (inputs/outputs) = D, M* Galvanically isolated, 3 to 30 V DC, R_i = 5 kΩ *Basic specifications, position 3 (inputs/outputs) = N, Q, 7* Galvanically isolated, polarity-independent, 3 to 30 V DC, R_i = 3 kΩ	
Modbus RS485	Galvanically isolated RS485 as per Standard EIA/TIA-485	

Additional technical information

Device fuse

⚠ Warning!
Use only fuses of the following types; the fuses are installed on the power supply board:

- Voltage 20 to 55 V AC / 16 to 62 V DC:
  fuse 2.0 A slow-blow, disconnect capacity 1500 A
  (Schurter, 0001.2503 or Wickmann, Standard Type 181 2.0 A)
- Voltage 85 to 260 V AC:
  fuse 0.8 A slow-blow, disconnect capacity 1500 A
  (Schurter, 0001.2507 or Wickmann, Standard Type 181 0.8 A)

www.endress.com/worldwide

Endress+Hauser

People for Process Automation

XA00137D/06/EN/13.12
71146634
FM+SGML 9.0