SD01553P/00/EN/04.19
71447003
2019-06-14

Special Documentation
Mechanical accessories for pressure measuring devices

Pressure measurement

One point of contact saves time and cuts cost

Endress+Hauser offers you the complete service portfolio for pressure measurement, ranging from engineering, project management, measuring devices and accessories to pre-assembled solutions and attractive life cycle management.

Accessories:
- Manifolds, block & bleed valves, pressure gauge valves, shutoff devices
- Flushing rings
- Siphons
- Oval flange adapter
- Mounting bracket
- Condensate traps
- Cable shortening kits
- Test adapter
- Protective roofs

Your benefits

- A single supplier for the transmitter and accessories ensures that everything is delivered in one shipment and no parts are missing
- The transmitter and accessories match
- One central point of contact

Endress+Hauser
People for Process Automation

Table of contents

DA63M block & bleed valve for Cerabar 3
Use 3
FNPT x FNPT, milled 3
MNPT x FNPT, milled 5
G ½" + adjusting nut, milled 7

DA63M 3-valve manifold for Deltabar 9
Use 9
Milled 9
Forged 11

DA63M 5-valve manifold for Deltabar 13
Use 13
Milled 13
Forged 15
Forged HT 17

PZAV: Pressure gauge valves for Cerabar and Ceraphant 20
Pressure gauge valve without test connection according to DIN 16270 20
Pressure gauge valve with test connection M20x1.5 according to DIN 16272 22

Combination of shutoff valve or manifold and measuring device 24
Block & bleed manifold 24
3-valve and 5-valve manifold 24

PZO: Oval flange adapter for Deltabar 25
Use 25
Technical data 25

DA61V: Shutoff device for pipes 26
Use 26
Installation and commissioning 26
Shutoff assembly with screw-in bonnet 26
Shutoff assembly with integrated bonnet 27
Shutoff assembly with integrated bonnet, high-temperature version 28

PZW: Siphons for Cerabar and Ceraphant 29
Overview 29
Siphons - O-shaped 30
U-shaped siphons 31

DA61C: Condensate pot for steam applications . . . 32
Use 32
Design 32
Technical data 32

Mounting bracket for DA63M 34
Use 34
Mounting bracket for block & bleed valve 34
Mounting bracket for 3-valve and 5-valve manifold 35

Mounting bracket for Deltabar 36
Typical installation arrangements 36
Standard version 38
Heavy-duty version 39

Mounting bracket for Cerabar and Deltapilot 40
Ordering information 40

Test adapter for Waterpilot and Deltapilot 41
Use 41
Test adapter 41

Cable shortening kit for Waterpilot and Deltapilot 42
Use 42
Ordering information for Waterpilot 42
Ordering information for Deltapilot 42

Protective roofs 43
316L protective roof 43
PVC protective roof 44

Welding flanges and weld-in adapters 44

Flushing rings 45
Overview 45
Technical data 45
Ordering information 46

Ordering information 47

Supplementary documentation 47
Field of Activities 47
Field of Activities 47

DA63M block & bleed valve for Cerabar

Use

The valve is used to connect pressure gauges, pressure transmitters and pressure switches.

FNPT x FNPT, milled

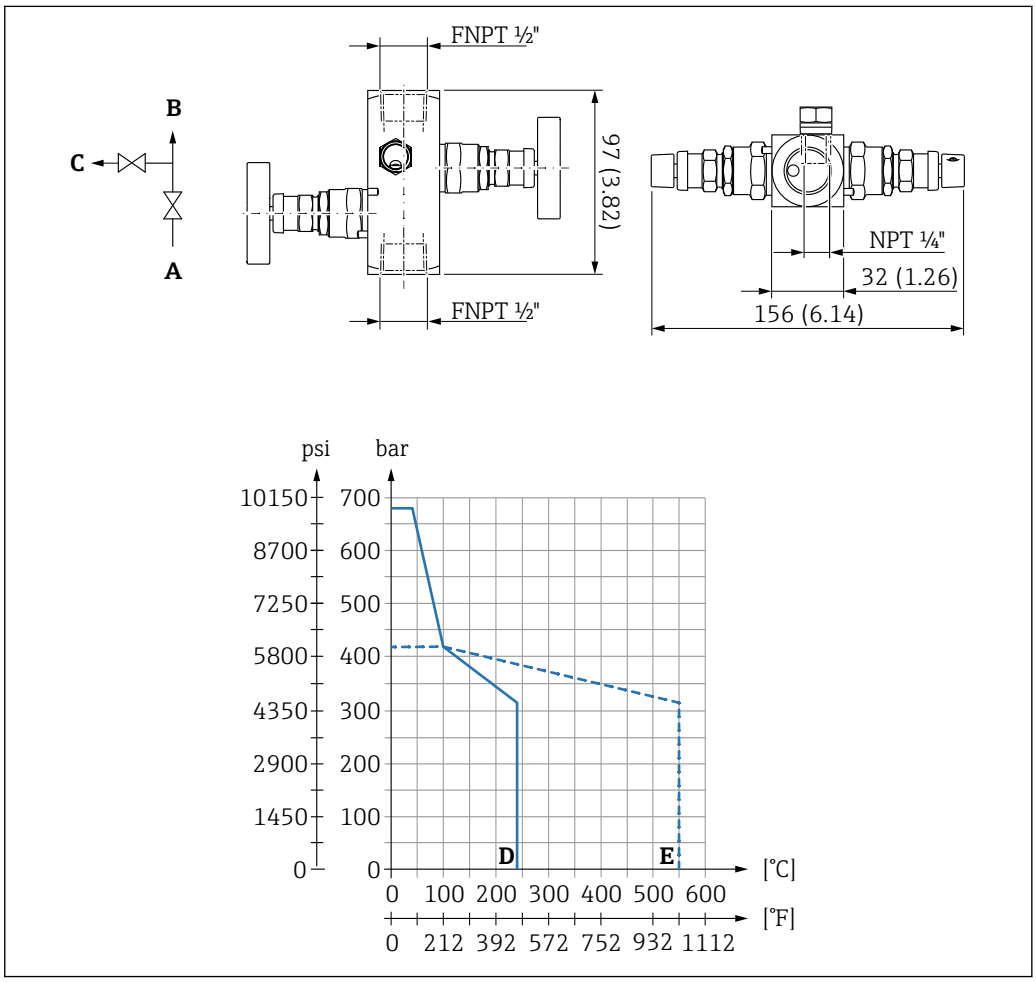

Unit of measurement mm (in)

A Process side (inlet)
B Transmitter side (outlet)
C Venting
D PTFE packing
E Pure graphite packing

Design and weight

- Process side (inlet): FNPT ½"
- Transmitter side (outlet): FNPT ½"
- Exhaust air vent: NPT ¼"
- Weight: 1 kg (2.21 lb)

Materials and application

Component part	"316L" version [1]	"Alloy C276" version [2]
Housing	1.4404	2.4819
Protection cap	1.4404	2.4819
Locknut	1.4401	1.4401
Valve body	1.4404	1.4404
Gland nut	1.4401	1.4401
Packing [3] [4]	PTFE up to +230 °C (+446 °F) Maximum 689 bar (10 000 psi)	
	Pure graphite up to +550 °C (+1 022 °F) Maximum 420 bar (6 092 psi)	-

1) Product Configurator DA63M order code for "Version", option "TB2"; Product Configurator Cerabar order code for "Accessories enclosed" option "P2" or "Accessories mounted" option "N2"
2) Product Configurator DA63M order code for "Version", option "TB3"; Product Configurator Cerabar order code for "Accessories enclosed" option "P8" or "Accessories mounted" option "N8"
3) Pay attention to the pressure and temperature limits of the measuring device!
4) The pressure and temperature limits of the manifold are related to one another (see pressure and temperature chart).

MNPT x FNPT, milled

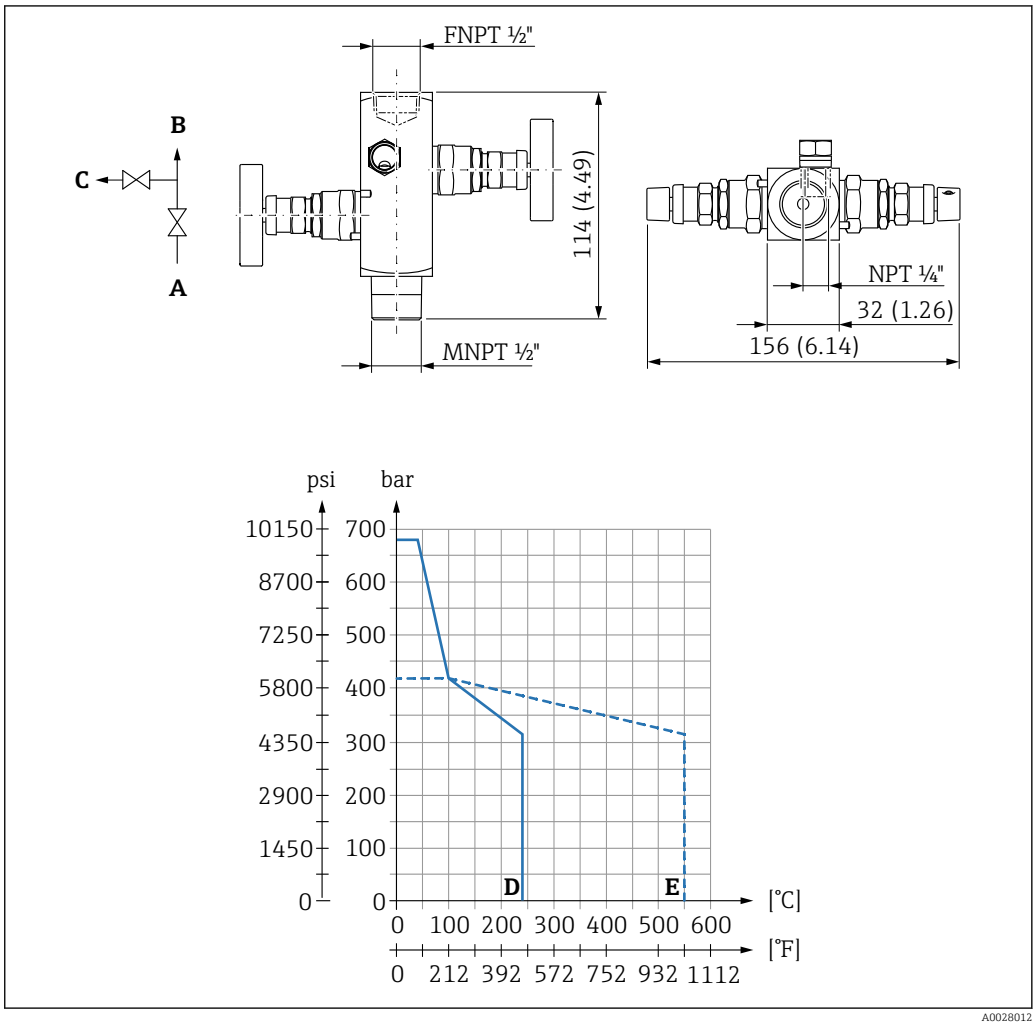

A0028012

Unit of measurement mm (in)

A Process side (inlet)
B Transmitter side (outlet)
C Venting
D PTFE packing
E Pure graphite packing

Design and weight

- Process side (inlet): MNPT ½"
- Transmitter side (outlet): FNPT ½"
- Exhaust air vent: NPT ¼"
- Weight: 1 kg (2.21 lb)

Materials and application

Component part	"316L" version [1]	"Alloy C276" version [2]
Housing	1.4404	2.4819
Protection cap	1.4404	2.4819
Locknut	1.4401	1.4401
Valve body	1.4404	1.4404
Gland nut	1.4401	1.4401
Packing [3] [4]	PTFE up to +230 °C (+446 °F) Maximum 689 bar (10 000 psi)	
	Pure graphite up to +550 °C (+1 022 °F) Maximum 420 bar (6 092 psi)	-

1) Product Configurator DA63M order code for "Version", option "TB2"; Product Configurator Cerabar order code for "Accessories enclosed" option "P2" or "Accessories mounted" option "N2"
2) Product Configurator DA63M order code for "Version", option "TB3"; Product Configurator Cerabar order code for "Accessories enclosed" option "P8" or "Accessories mounted" option "N8"
3) Pay attention to the pressure and temperature limits of the measuring device!
4) The pressure and temperature limits of the manifold are related to one another (see pressure and temperature chart).

G ½" + adjusting nut, milled

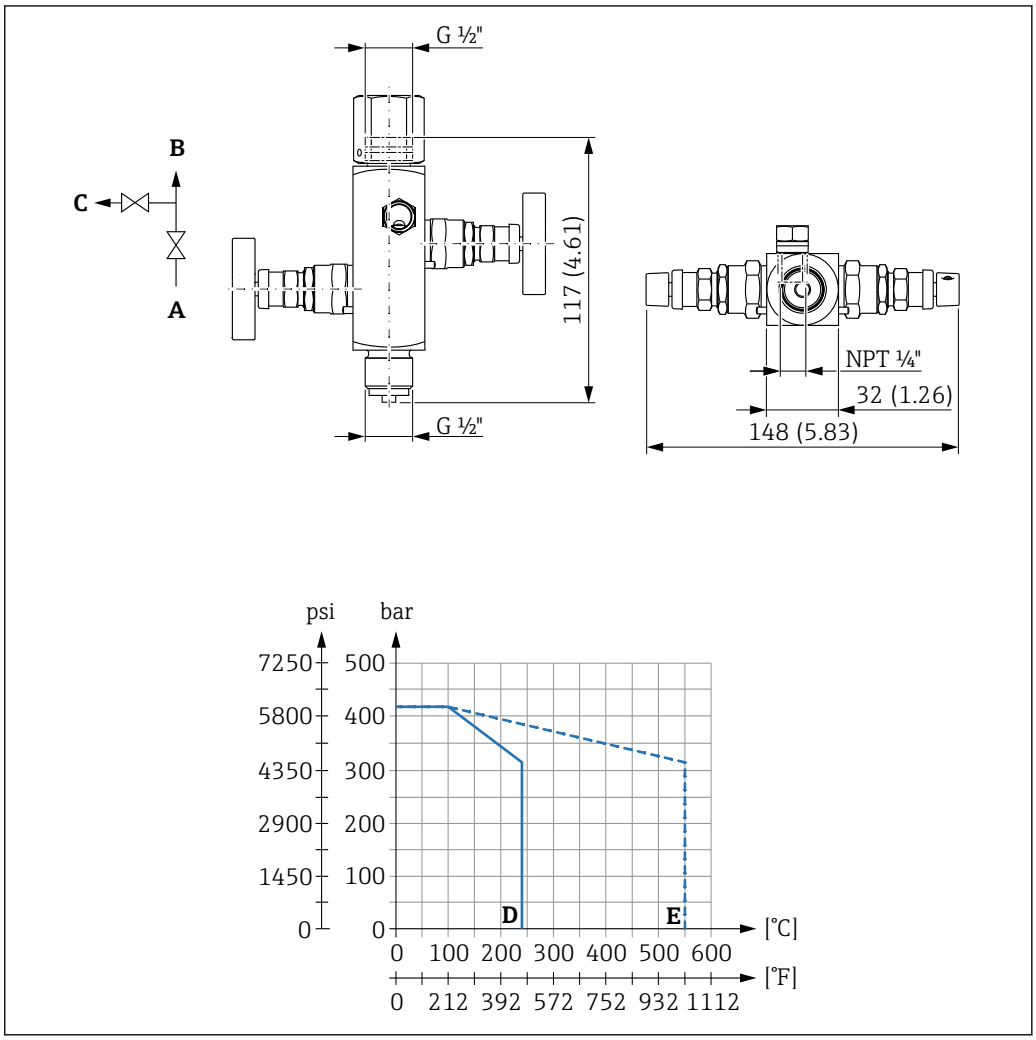

A0028017

Unit of measurement mm (in)

A Process side (inlet)
B Transmitter side (outlet)
C Venting
D PTFE packing
E Pure graphite packing

Design and weight

- Process side (inlet): ISO228 G½" EN837
- Transmitter side (outlet): G ½" + adjusting nut
- Exhaust air vent: NPT ¼"
- Weight: 1 kg (2.21 lb)

Materials and application

Component part	"316L" version [1]
Housing	1.4404
Protection cap	1.4404
Locknut	1.4401
Valve body	1.4404
Gland nut	1.4401
Packing [2] [3]	PTFE up to +230 °C (+446 °F) Maximum 420 bar (6 092 psi)
	Pure graphite up to +550 °C (+1 022 °F) Maximum 420 bar (6 092 psi)

1) Product Configurator DA63M order code for "Version", option "TB2"; Product Configurator Deltabar order code for "Accessories enclosed" option "P2" or "Accessories mounted" option "N2"
2) Pay attention to the pressure and temperature limits of the measuring device!
3) The pressure and temperature limits of the manifold are related to one another (see pressure and temperature chart).

DA63M 3-valve manifold for Deltabar

Use

The manifold is used to connect impulse lines to the differential pressure transmitter.

Milled

Version for gas and liquid applications.

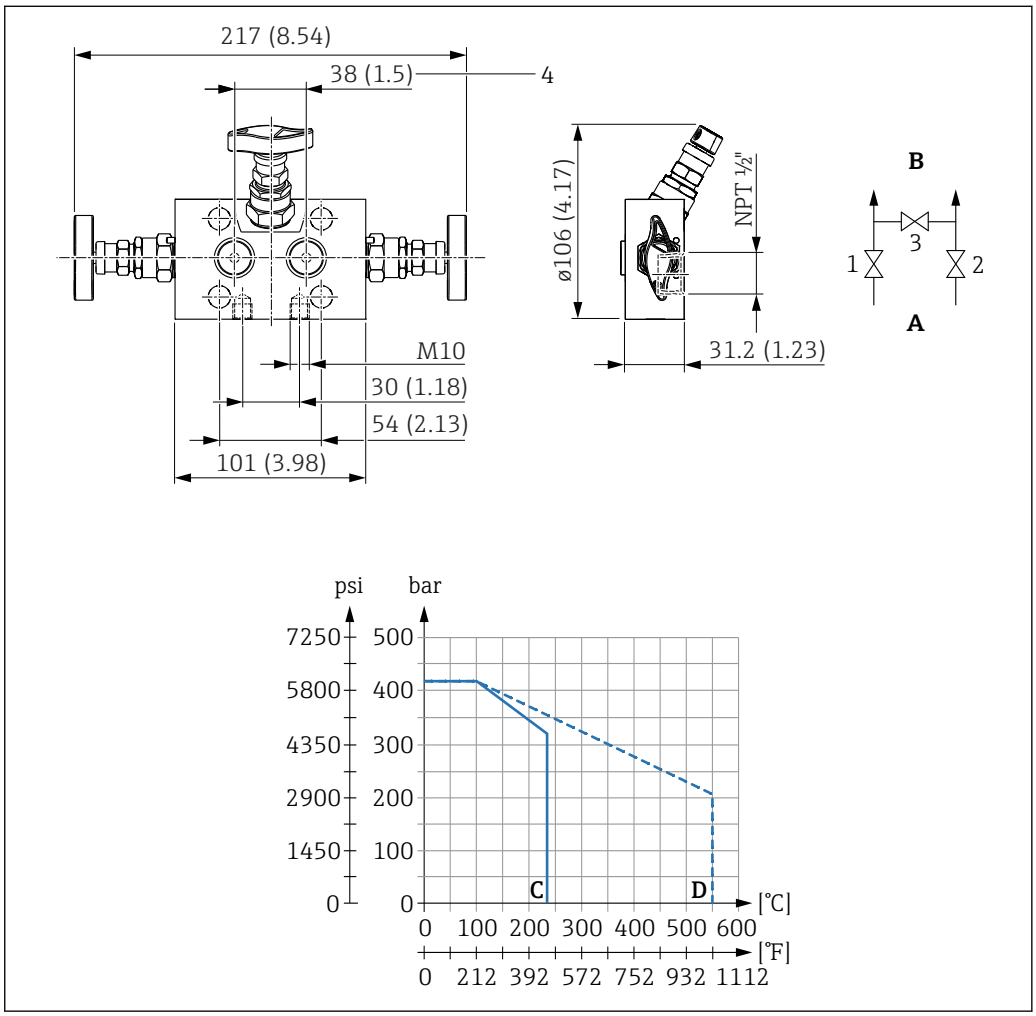

Unit of measurement mm (in)

A Process side
B Transmitter side
C PTFE packing
D Pure graphite packing
1, 2 The transmitter can be disconnected from the impulse lines with valves 1 and 2.
3 Valve 3 is used for zero point compensation between the impulse lines.
4 Distance between impulse line inlets.

Design and weight

- Surface: phosphatized steel
- Stem thread: external
- Valve stem: cold-rolled surface, with back seat and non-rotating needle tip
- Inlet: FNPT ½"
- Outlet: IEC61518, Form A
- Attachment: 4 screws, 2 seals, 4 washers (only for M10 screw set)
- Weight: approx. 2 kg (4.4 lb)

Materials and application

Component part	"Steel" version [1]	"316L" version [2]	Alloy C276 [3]
Housing	1.0460	316L (1.4404)	Alloy C-276 (2.4819)
Housing temperature application limits	−10 to +450 °C (+14 to +842 °F)	−40 to +550 °C (−40 to +1 022 °F)	−40 to +232 °C (−40 to +450 °F)
Bonnet	316 (1.4401)	316 (1.4401)	Alloy C-276 (2.4819)
Valve stem	1.4104	1.4404	2.4819
Needle tip	1.4122	1.4571	2.4819
Packing [4] [5]	▪ PTFE: up to +230 °C (+446 °F) ▪ Maximum 420 bar (6 092 psi)	▪ PTFE: up to +230 °C (+446 °F) ▪ Pure graphite: up to +550 °C (+1 022 °F) ▪ Maximum 420 bar (6 092 psi)	▪ PTFE: up to +230 °C (+446 °F) ▪ Maximum 420 bar (6 092 psi)
Gland nut	1.4301	1.4301	2.4819
T-handle	Stainless steel	Stainless steel	316
Securing screws (depending on process connection)	▪ M10 hex head screw DIN931/933/DIN EN24017 Quality: 8.8 ▪ 7/16-20 UNF screw ANSI B18.2.1 Quality: ASTM A449 Type 1	▪ M10 hex head screw DIN931/933/DIN EN24017 Quality: A2-70 ▪ 7/16-20 UNF screw ANSI B18.2.1 Quality: ASTM A193 B8M Class 2	▪ M10 hex head screw DIN931/933/DIN EN24017 Quality: A2-70 ▪ 7/16-20 UNF screw ANSI B18.2.1 Quality: ASTM A193 B8M Class 2
Seal	▪ PTFE: −10 to +80 °C (+14 to +176 °F) (in accordance with EN61518) ▪ FKM Viton: −15 to +120 °C (+5 to +248 °F) ▪ Graphite: −40 to +120 °C (−40 to +248 °F) (in accordance with EN61518)		

1) Product Configurator DA63M order code for "Version", option "AB1"
2) Product Configurator DA63M order code for "Version", option "AB2"; Product Configurator Deltabar order code for "Accessory enclosed" option "P3" or "Accessories mounted" option "N3
3) Product Configurator DA63M order code for "Version", option "BB3"
4) Pay attention to the pressure and temperature limits of the measuring device!
5) The pressure and temperature limits of the manifold are related to one another (see pressure and temperature chart).

Forged

Version for steam applications.

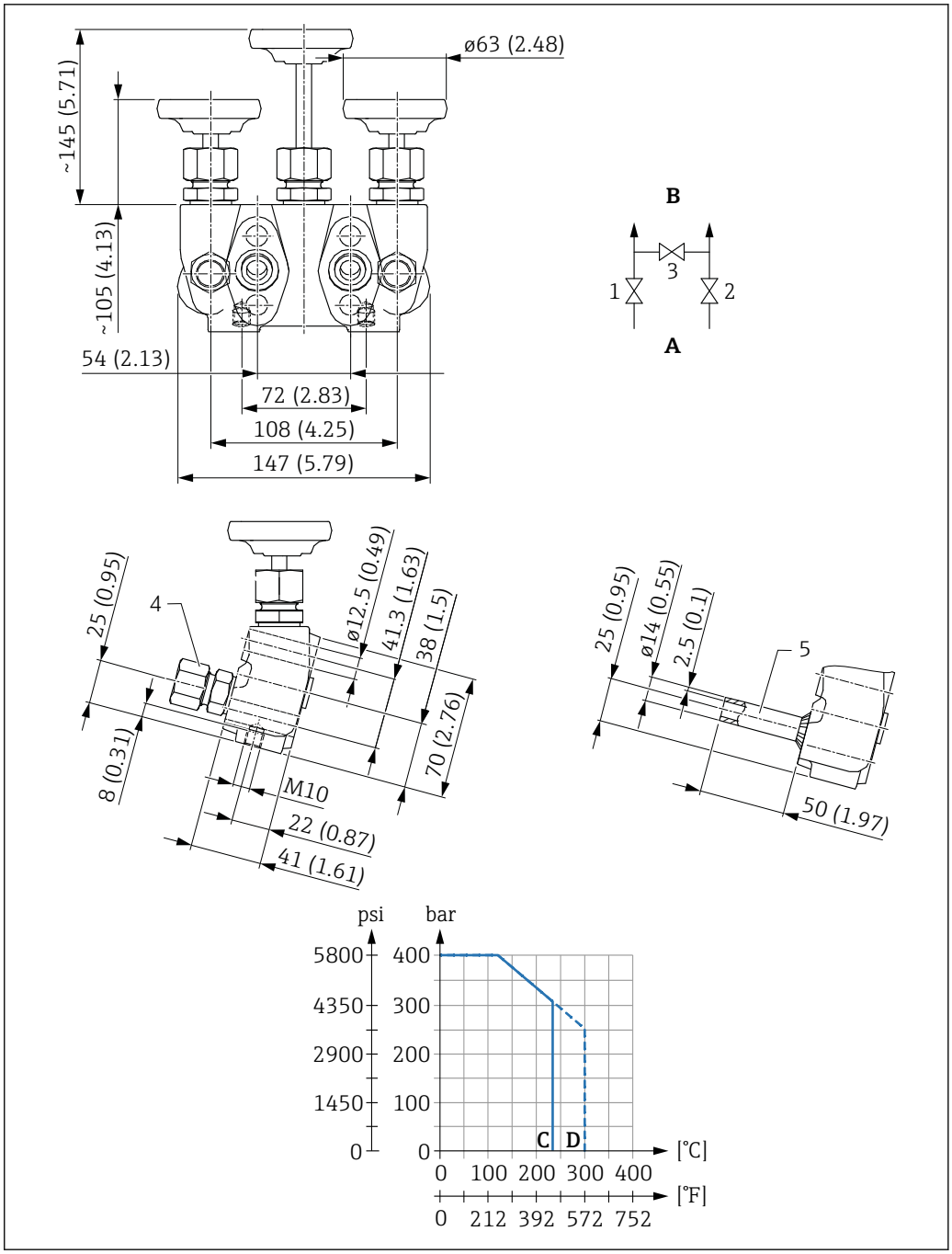

Unit of measurement mm (in)

A Process side
B Transmitter side
C PTFE packing
D Pure graphite packing
1, 2 The transmitter can be disconnected from the impulse lines with valves 1 and 2.
3 Valve 3 is used for zero point compensation between the impulse lines.
4 Cutting ring
5 Weld connection

Design and weight

- Housing: die-pressed part
- Surface: phosphatized steel
- Stem thread: internal
- Valve seat: replaceable
- Valve stem: cold-rolled surface, with back seat and non-rotating needle tip
- Hand wheels: plastic
- Inlet:
  - Cutting ring fitting for tube Ø12 mm (0.47 in), series S, G 3/8
  - Welding nipples for tube Ø 14 x 2.5 mm
- Outlet: IEC61518, Form A
- Attachment: 4 screws, 2 seals, 4 washers (only for M10 screw set)
- Weight: approx. 3.2 kg (7 lb)

Materials and application

	"Steel" version [1]	"316Ti" version [2]
Housing	1.0460	1.4571
Housing temperature application limits	−10 to +300 °C (+14 to +572 °F)	−40 to +300 °C (−40 to +572 °F)
Bonnet	1.0501	1.4571
Valve seat	1.4571	1.4571
Valve stem	1.4104	1.4571
Needle tip	1.4122	1.4571
Packing [3] [4]	▪ PTFE: up to +230 °C (+446 °F) ▪ Pure graphite: up to +300 °C (+572 °F) ▪ Maximum 400 bar (5 800 psi)	▪ PTFE: up to +230 °C (+446 °F) ▪ Pure graphite: up to +300 °C (+572 °F) ▪ Maximum 400 bar (5 800 psi)
Union nut	Steel	1.4571
Welding nipple	1.4515	1.4571
Securing screws (depending on process connection)	▪ M10 hex head screw DIN931/933/DIN EN24017 Quality: 8.8 ▪ 7/16-20 UNF screw ANSI B18.2.1 Quality: ASTM A449 Type 1	▪ M10 hex head screw DIN931/933/DIN EN24017 Quality: A2-70 ▪ 7/16-20 UNF screw ANSI B18.2.1 Quality: ASTM A193 B8M Class 2
Seal	▪ PTFE: −10 to +80 °C (+14 to +176 °F) (in accordance with EN61518) ▪ FKM Viton: −15 to +120 °C (+5 to +248 °F) ▪ Graphite: −40 to +120 °C (−40 to +248 °F) (in accordance with EN61518)	

1) Product Configurator, order code for "Version", option "AA1"
2) Product Configurator, order code for "Version", option "AA2"
3) Pay attention to the pressure and temperature limits of the measuring device!
4) The pressure and temperature limits of the manifold are related to one another (see pressure and temperature chart).

DA63M 5-valve manifold for Deltabar

Use

The manifold is used for differential pressure transmitter installation or zero point adjustment and to shut off the impulse line.

Milled

Version for gas and liquid applications and with vent.

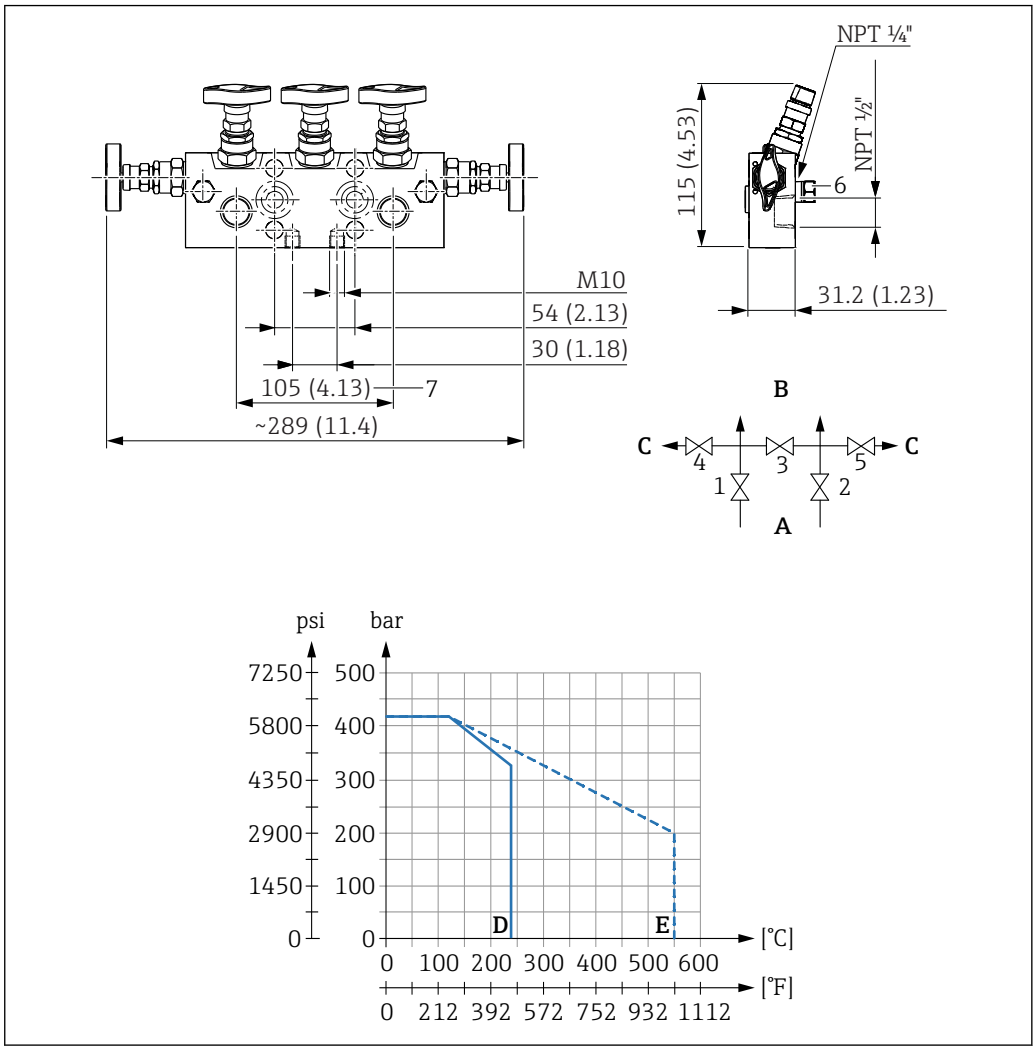

A0027748

Unit of measurement mm (in)

A Process side
B Transmitter side
C Venting
D PTFE packing
E Pure graphite packing
1, 2 The transmitter can be disconnected from the impulse lines with valves 1 and 2.
3 Valve 3 is used for zero point compensation between the impulse lines.
4, 5 The impulse lines can be vented or blown clear with valves 4 and 5.
6 Vent connection NPT ½", female
7 Distance between impulse line inlets.

Design and weight

- Surface: phosphatized steel
- Stem thread: external
- Valve stem: cold-rolled surface, with back seat and non-rotating needle tip
- Inlet: FNPT ½"
- Outlet: IEC 61518, Form A
- Attachment: 4 screws, 2 seals, 4 washers (only for M10 screw set)
- Weight: approx. 3.3 kg (7.3 lb)
- Vent connection: NPT ½", female

Materials and application

	"Steel" version [1]	"316L" version [2]	Alloy C276 [3]
Housing	1.0460	316L (1.4401)	Alloy C-276 (2.4819)
Housing temperature application limits	−10 to +550 °C (+14 to +1 022 °F)	−40 to +550 °C (−40 to +1 022 °F)	−40 to +232 °C (−40 to +450 °F)
Bonnet	316L (1.4401)	316L (1.4401)	Alloy C-276 (2.4819)
Valve stem	1.4104	1.4101	2.4819
Needle tip	1.4122	1.4571	2.4819
Packing [4] [5]	▪ PTFE: up to +230 °C (+446 °F) ▪ Maximum 420 bar (6 092 psi)	▪ PTFE: up to +230 °C (+446 °F) ▪ Pure graphite: up to +550 °C (+1 022 °F) ▪ Maximum 420 bar (6 092 psi)	▪ PTFE: up to +230 °C (+446 °F) ▪ Maximum 420 bar (6 092 psi)
Gland nut	1.4301	1.4301	2.4819
T-handle	Stainless steel	Stainless steel	316
Screw plug	1.0501	1.4404	2.4819
Securing screws (depending on process connection)	▪ M10 hex head screw DIN931/933/DIN EN24017 Quality: 8.8 ▪ 7/16-20 UNF screw ANSI B18.2.1 Quality: ASTM A449 Type 1	▪ M10 hex head screw DIN931/933/DIN EN24017 Quality: A2-70 ▪ 7/16-20 UNF screw ANSI B18.2.1 Quality: ASTM A193 B8M Class 2	▪ M10 hex head screw DIN931/933/DIN EN24017 Quality: A2-70 ▪ 7/16-20 UNF screw ANSI B18.2.1 Quality: ASTM A193 B8M Class 2
Seal	▪ PTFE: −10 to +80 °C (+14 to +176 °F) (in accordance with EN61518) ▪ FKM Viton: −15 to +120 °C (+5 to +248 °F) ▪ Graphite: −40 to +120 °C (−40 to +248 °F) (in accordance with EN61518)		

1) Product Configurator DA63M order code for "Version", option "BB1"
2) Product Configurator DA63M order code for "Version", option "BB2"; Product Configurator Deltabar order code for "Accessory enclosed" option "P5" or "Accessories mounted" option "N5"
3) Product Configurator DA63M order code for "Version", option "BB3"
4) Pay attention to the pressure and temperature limits of the measuring device!
5) The pressure and temperature limits of the manifold are related to one another (see pressure and temperature chart).

Forged

Version for steam applications and with purge valve.

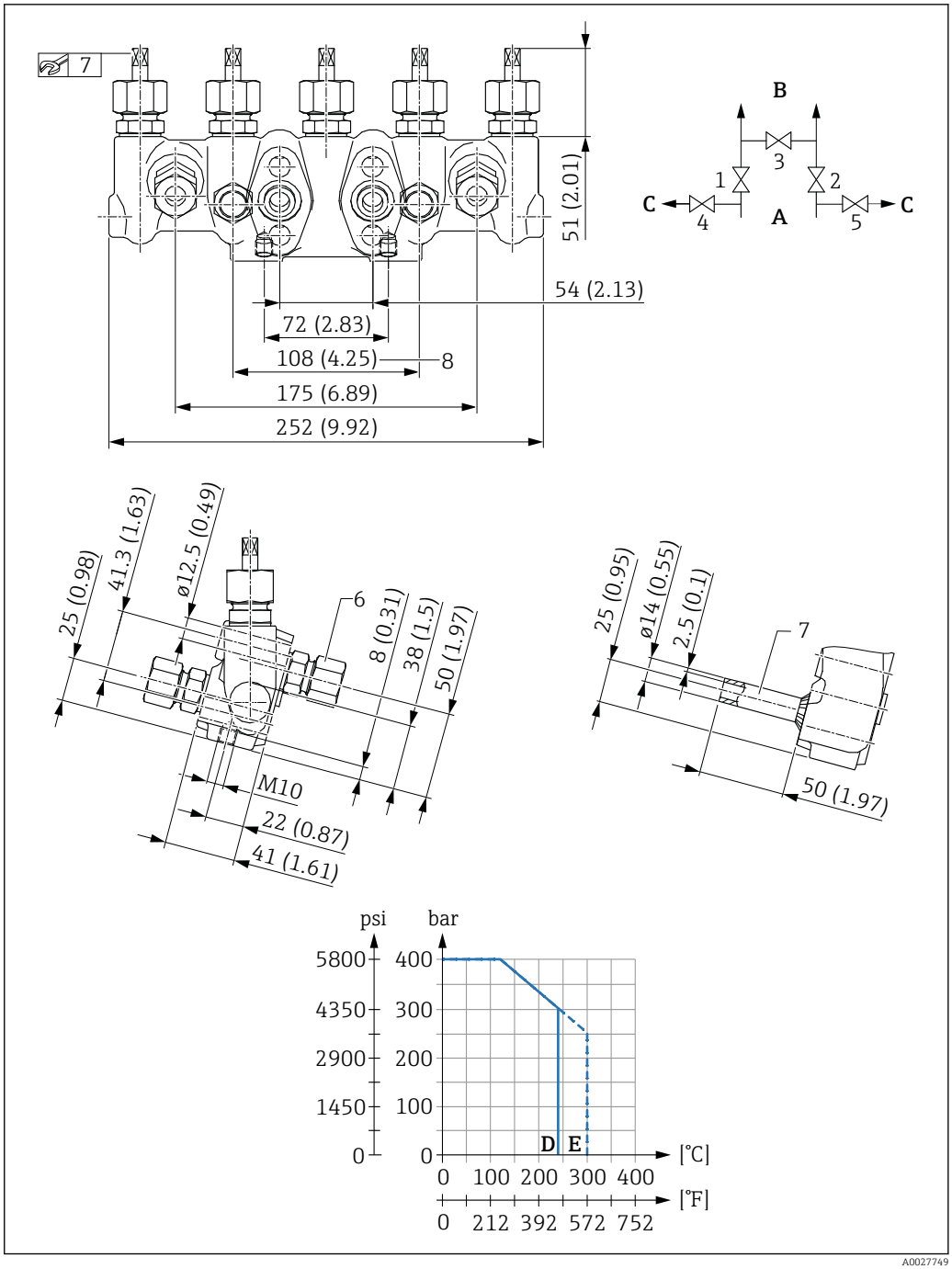

Unit of measurement mm (in)

A Process side
B Transmitter side
C Blow clear
D PTFE packing
E Pure graphite packing
1, 2 The transmitter can be disconnected from the impulse lines with valves 1 and 2.
3 Valve 3 is used for zero point compensation between the impulse lines.
4, 5 The impulse lines can be vented or blown clear with valves 4 and 5.
6 Cutting ring fitting
7 Weld connection
8 Distance between impulse line inlets.

Design and weight

- Housing: die-pressed part
- Surface: phosphatized steel
- Stem thread: internal
- Valve seat: replaceable
- Valve stem: cold-rolled surface, with back seat and non-rotating needle tip
- Inlet/blow clear
  - Cutting ring fitting for tube Ø12 mm (0.47 in), series S, G 3/8
  - Welding nipples for tube Ø 14 x 2.5 mm
- Outlet: IEC 61518, Form A
- Attachment: 4 screws, 2 seals, 4 washers (only for M10 screw set)
- Weight: approx. 4.6 kg (10.2 lb)

Materials and application

	"Steel" version [1]	"316Ti" version [2]
Housing	1.0460	1.4571
Housing temperature application limits	−10 to +300 °C (+14 to +572 °F)	−40 to +300 °C (−40 to +572 °F)
Bonnet	1.0501	1.4571
Valve seat	1.4571	1.4571
Valve stem	1.4104	1.4571
Needle tip	1.4122	1.4571
Packing [3] [4]	▪ PTFE: up to +230 °C (+446 °F) ▪ Pure graphite: up to +300 °C (+572 °F) ▪ Maximum 400 bar (5 800 psi)	▪ PTFE: up to +230 °C (+446 °F) ▪ Pure graphite: up to +300 °C (+572 °F) ▪ Maximum 400 bar (5 800 psi)
Union nut	Steel	1.4571
Securing screws (depending on process connection)	▪ M10 hex head screw DIN931/933/DIN EN24017 Quality: 8.8 ▪ 7/16-20 UNF screw ANSI B18.2.1 Quality: ASTM A449 Type 1	▪ M10 hex head screw DIN931/933/DIN EN24017 Quality: A2-70 ▪ 7/16-20 UNF screw ANSI B18.2.1 Quality: ASTM A193 B8M Class 2
Seal	▪ PTFE: −10 to +80 °C (+14 to +176 °F) (in accordance with EN61518) ▪ FKM Viton: −15 to +120 °C (+5 to +248 °F) ▪ Graphite: −40 to +120 °C (−40 to +248 °F) (in accordance with EN61518)	

1) Product Configurator, order code for "Version", option "CA1"
2) Product Configurator, order code for "Version", option "CA2"
3) Pay attention to the pressure and temperature limits of the measuring device!
4) The pressure and temperature limits of the manifold are related to one another (see pressure and temperature chart).

Forged HT

Version for high-temperature steam applications and with purge valve.

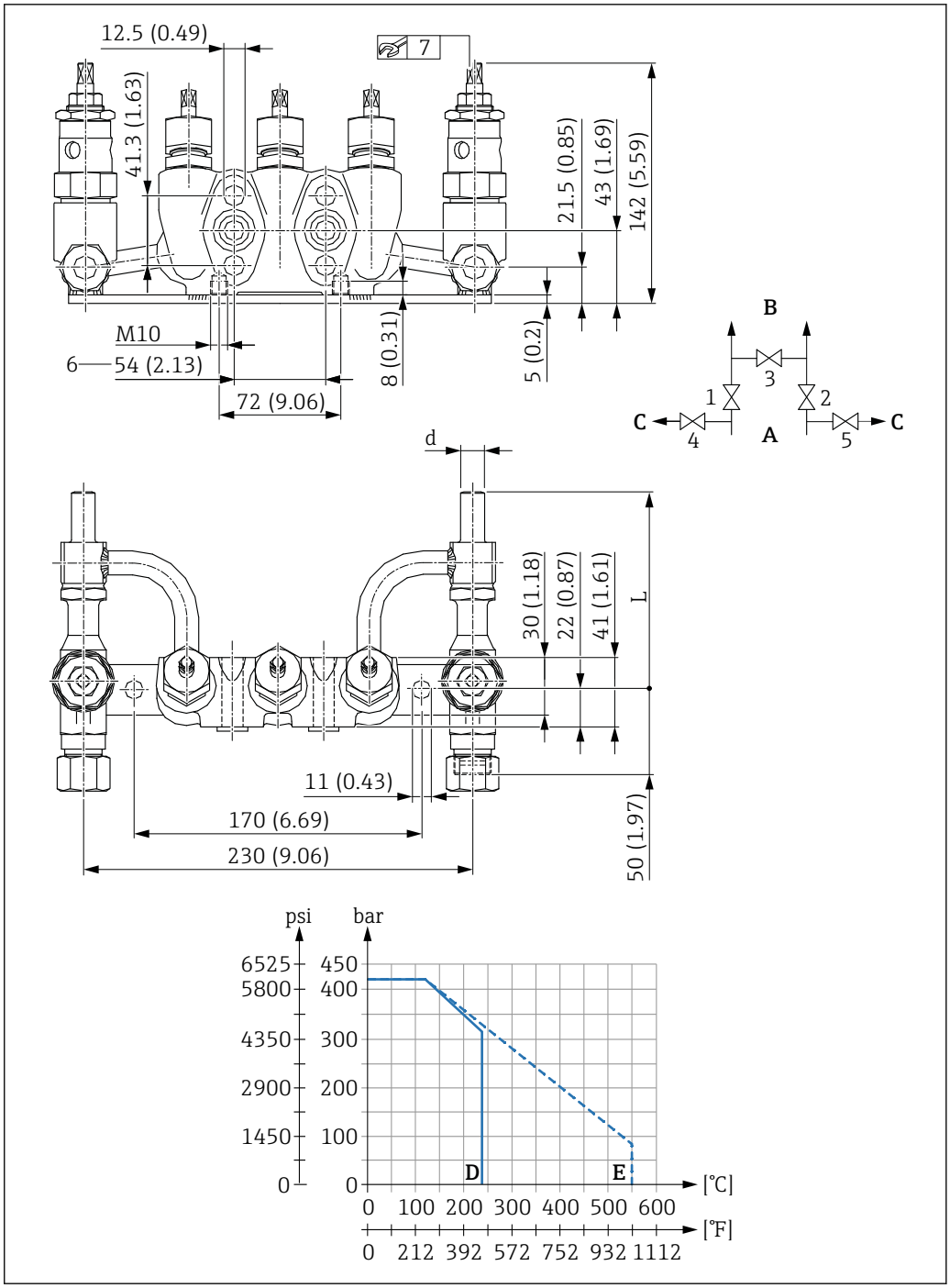

Unit of measurement mm (in)

A Process side
B Transmitter side
C Purge valve
D PTFE packing
E Pure graphite packing
1, 2 The transmitter can be disconnected from the impulse lines with valves 1 and 2.
3 Valve 3 is used for zero point compensation between the impulse lines.
4, 5 The impulse lines can be vented or blown clear with valves 4 and 5.
6 Distance between impulse line inlets.

Design and weight

- Housing: die-pressed part
- Surface: phosphatized steel
- Manifold stem thread: internal
- Purge valves: external stem thread
- Valve seat: replaceable
- Valve stem: cold-rolled surface, with back seat and non-rotating needle tip
- Inlet: butt weld connection for tube 14 x 2.5 mm (d)
- Manifold outlet: IEC 61518, Form A
- Purge valve outlet: cutting ring fitting for tube 14 mm (0.55 in), series S
- Attachment: 4 screws, 2 seals, 4 washers (only for M10 screw set)
- Weight: approx. 5.6 kg (12.4 lb)

Materials and application

"Steel" version (Product Configurator, order code for "Version", option "DA1")

	Valve block	**Purge valve**
Housing	1.0460	1.5415
Housing temperature application limits	−10 to +200 °C (+14 to +392 °F)	−10 to +550 °C (+14 to +1 022 °F)
Bonnet	1.0501	1.7709
Valve seat	1.4571	1.4021
Valve stem	1.4104	1.4021
Needle tip	1.4122	1.4122
Packing [1) 2)]	▪ PTFE: up to +230 °C (+446 °F) ▪ Maximum 420 bar (6 092 psi)	▪ Pure graphite: +550 °C (+1 022 °F) ▪ Maximum 420 bar (6 092 psi)
Union nut	Steel	-
Gland nut	-	2.0550
Securing screws (depending on process connection)	▪ M10 hex head screw DIN931/933/DIN EN24017 Quality: 8.8 ▪ 7/16-20 UNF screw ANSI B18.2.1 Quality: ASTM A449 Type 1	
Seal	▪ PTFE: −10 to +80 °C (+14 to +176 °F) (in accordance with EN61518) ▪ FKM Viton: −15 to +120 °C (+5 to +248 °F) ▪ Graphite: −40 to +120 °C (−40 to +248 °F) (in accordance with EN61518)	

1) Pay attention to the pressure and temperature limits of the measuring device!
2) The pressure and temperature limits of the manifold are related to one another (see pressure and temperature chart).

"316Ti" version (Product Configurator, order code for "Version", option "DA2")

	Valve block	Purge valve
Housing	1.4571	1.4571
Housing temperature application limits	−40 to +200 °C (−40 to +392 °F)	−40 to +550 °C (−40 to +1 022 °F)
Bonnet	1.4571	1.4571
Valve seat	1.4571	1.4571
Valve stem	1.4571	1.4571
Needle tip	1.4571	1.4571
Packing [1) 2)]	▪ PTFE: up to +230 °C (+446 °F) ▪ Maximum 420 bar (6 092 psi)	▪ Pure graphite: +550 °C (+1 022 °F) ▪ Maximum 420 bar (6 092 psi)
Union nut	1.4571	-
Gland nut	-	1.4301
Securing screws (depending on process connection)	▪ M10 hex head screw DIN931/933/DIN EN24017 Quality: A2-70 ▪ 7/16-20 UNF screw ANSI B18.2.1 Quality: ASTM A193 B8M Class 2	
Seal	▪ PTFE: −10 to +80 °C (+14 to +176 °F) (in accordance with EN61518) ▪ FKM Viton: −15 to +120 °C (+5 to +248 °F) ▪ Graphite: −40 to +120 °C (−40 to +248 °F) (in accordance with EN61518)	

1) Pay attention to the pressure and temperature limits of the measuring device!
2) The pressure and temperature limits of the manifold are related to one another (see pressure and temperature chart).

PZAV: Pressure gauge valves for Cerabar and Ceraphant

Pressure gauge valve without test connection according to DIN 16270

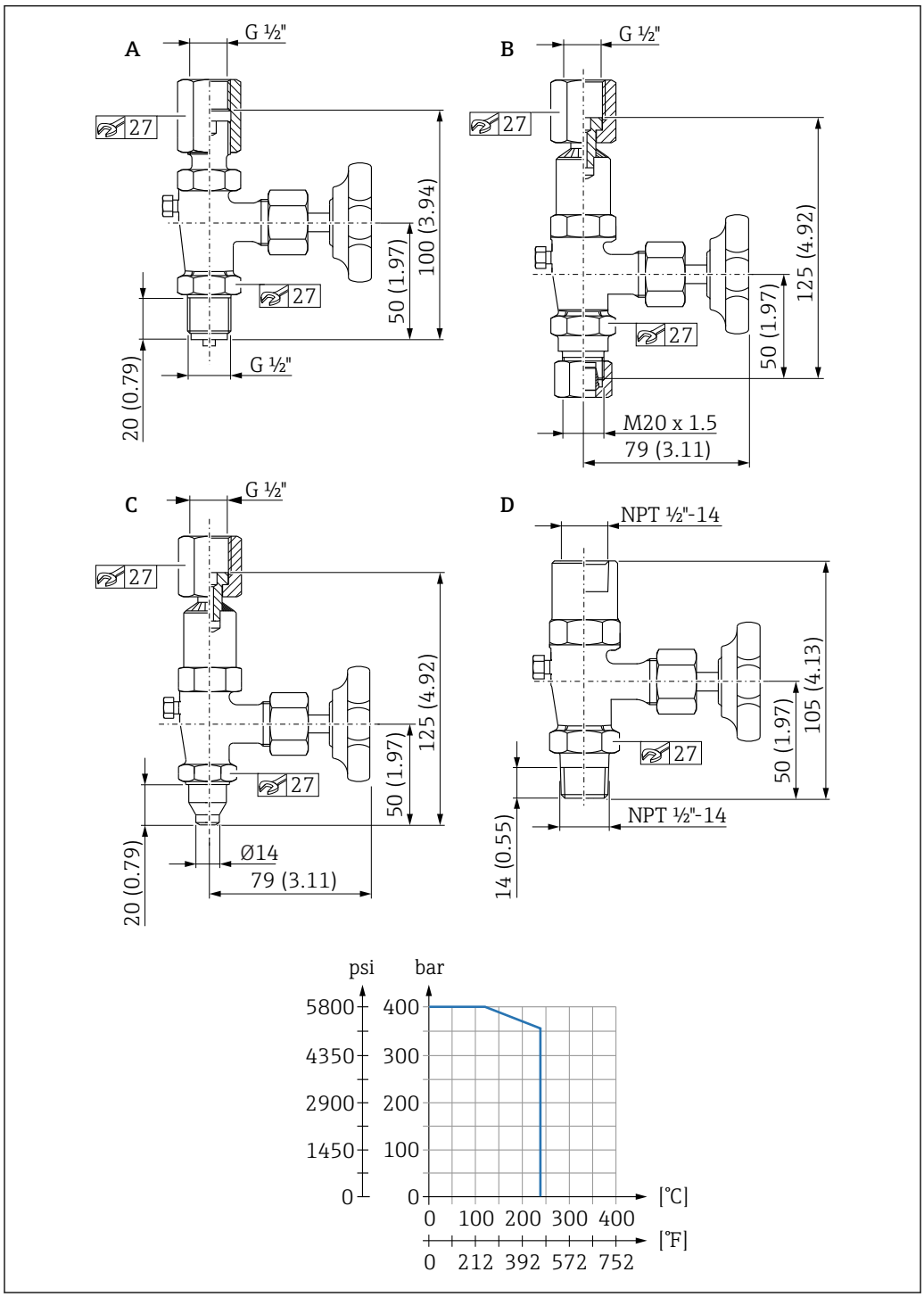

Unit of measurement mm (in)

Use

Suitable for shutting off the impulse lines and for mounting pressure transmitters with ISO228 G1/2" thread according to DIN16270 or NPT 1/2" thread.

Simple shutoff valves do not have a vent screw.

Design

Item	Inlet	Outlet (to measuring device)	Option	
A	ISO228 G ½" EN837	G ½" female, adjusting nut	1 [1]	A [2]
B	Ermeto 12S	G ½" female, adjusting nut	1 [1]	B [2]
C	Weld connection	G ½" female, adjusting nut	1 [1]	C [2]
D	MNPT ½"	FNPT ½", internal	1 [1]	D [2]

1) Product Configurator, order code for "Valve"
2) Product Configurator, order code for "Process connection (outlet x inlet)"

Technical data

	"Steel" version [1] [2]	"316Ti" version [3] [2]
Housing	1.0460	1.4571
Valve stem	1.4104	1.4571
Needle tip	1.4104	1.4571
Packing [4] [5]	▪ PTFE up to +230 °C (+446 °F) ▪ Maximum 400 bar (5 800 psi)	▪ PTFE up to +230 °C (+446 °F) ▪ Maximum 400 bar (5 800 psi)
Inlet	1.0460	1.4571
Outlet	1.0460	1.4571
Vent screw	A4 (316)	A4 (316)
Hand wheel	Plastic	Plastic
3.1 Certificate	PZAV-B	PZAV-B

1) Product Configurator, order code for "Valve body; seal", option "1"
2) Cerabar M: Product Configurator, order code for "Accessory enclosed", option "P2"
3) Product Configurator, order code for "Valve body; seal", option "2"
4) Pay attention to the pressure and temperature limits of the measuring device!
5) The pressure and temperature limits of the valves are related to one another (see pressure and temperature chart).

Pressure gauge valve with test connection M20x1.5 according to DIN 16272

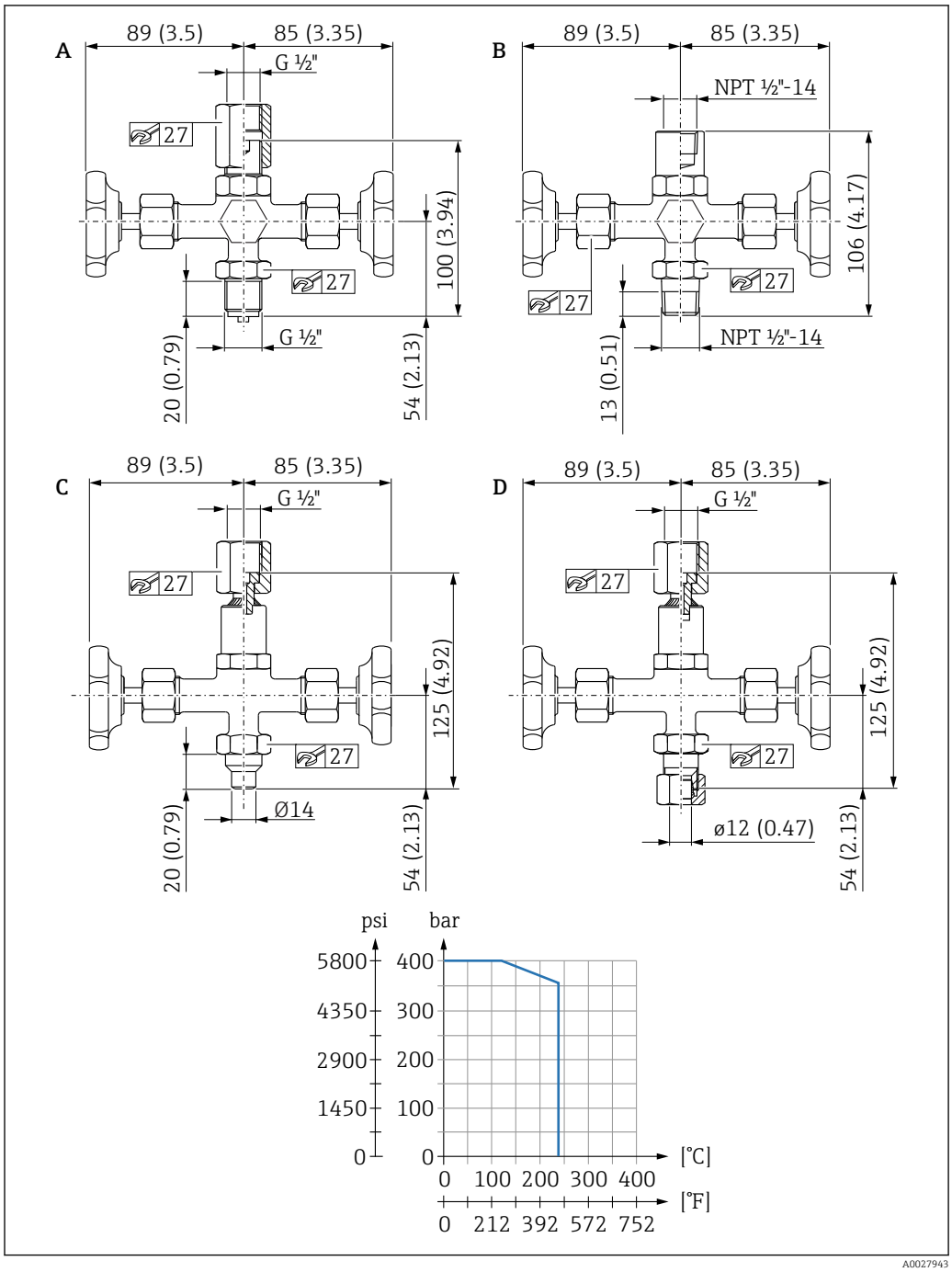

Unit of measurement mm (in)

Use

Suitable for shutting off the impulse lines and for mounting pressure transmitters with ISO228 G1/2" thread according to DIN16272 or NPT 1/2" thread.

Simple shutoff valves do not have a vent screw.

Design

Item	Inlet	Outlet (to measuring device)	Option	
A	ISO228 G ½" EN837	G ½" female, adjusting nut	2 [1]	A [2]
B	Ermeto 12S	G ½" female, adjusting nut	2 [1]	B [2]
C	Weld connection 14x2.5	G ½" female, adjusting nut	2 [1]	C [2]
D	MNPT ½"	FNPT ½", internal	2 [1]	D [2]

1) Product Configurator, order code for "Valve"
2) Product Configurator, order code for "Process connection (outlet x inlet)"

Technical data

	"Steel" version [1] [2]	"316Ti" version [3]
Housing	1.0460	1.4571
Valve stem	1.4104	1.4571
Needle tip	1.4104	1.4571
Packing [4] [5]	▪ PTFE up to +230 °C (+446 °F) ▪ Maximum 400 bar (5 800 psi)	▪ PTFE up to +230 °C (+446 °F) ▪ Maximum 400 bar (5 800 psi)
Inlet	1.0460	1.4571
Outlet	1.0460	1.4571
Vent screw	1.0460	1.4571
Hand wheel	Plastic	Plastic
3.1 Certificate	PZAV-B	PZAV-B

1) Product Configurator, order code for "Valve body; seal", option "1"
2) Cerabar M: Product Configurator, order code for "Accessory enclosed", option "P2"
3) Product Configurator, order code for "Valve body; seal", option "2"
4) Pay attention to the pressure and temperature limits of the measuring device!
5) The pressure and temperature limits of the valves are related to one another (see pressure and temperature chart).

Combination of shutoff valve or manifold and measuring device

The possible combinations of manifold or valve and measuring device are described in the following tables.

Block & bleed manifold

1/2 FNPT process connection on valve manifold or shutoff valve for measuring device

- Shutoff valve order code: PZAV-##D#
- Manifold order code:
  - DA63M-TB#BFG
  - DA63M-TB#BGG
- Can be combined with the following process connections (Product Configurator, order code for "Process connection")
  - Cerabar S PMP71: RA, RB, RC, RD, RE, RF
  - Cerabar S PMC71: RA, RB, RC, RD, RE, RF
  - Cerabar S PMP75: UB, UD
  - Cerabar M PMP51: RKJ, RKC, RLJ, RLC, RJF
  - Cerabar M PMC51: RKJ, RKC, RLJ, RLC, RJF
  - Cerabar M PMP55: UCJ, UEJ
  - Cerabar PMP11/21: VWJ, VXJ
  - Cerabar PMC11/21: VWJ, VXJ
  - Deltabar FMD71: RKJ, RKC, RLJ, RLC, RJF
  - Deltabar FMD72: RKJ, RKC, RLJ, RLC, RJF

ISO228 G½ EN837 process connection on valve manifold or shutoff valve for measuring device

- Shutoff valve order code
  - PZAV-##A#
  - PZAV-##B#
  - PZAV-##C#
- Manifold order code: DA63M-TB2BHH
- Can be combined with the following process connections (Product Configurator, order code for "Process connection")
  - Cerabar S PMP71: GA, GB
  - Cerabar S PMC71: GA, GB
  - Cerabar S PMP75: UA, UC
  - Cerabar M PMP51: GCJ, GCC, GCF
  - Cerabar M PMC51: GCJ, GCC, GCF
  - Cerabar M PMP55: UBJ, UDJ
  - Cerabar PMP11/21: WBJ
  - Cerabar PMC11/21: WBJ
  - Deltabar FMD71: GCJ, GCC, GCF
  - Deltabar FMD72: GCJ, GCC, GCF

3-valve and 5-valve manifold

IEC61518 process connection on valve manifold or shutoff valve for measuring device

- Shutoff valve order code: -
- Manifold order code
  - DA63M-A#####
  - DA63M-B#####
  - DA63M-C#####
  - DA63M-D#####
  - DA63M-K#####
  - DA63M-L#####
- Can be combined with the following process connections (Product Configurator, order code for "Process connection")
  - Deltabar S PMD75: all NPT1/4-18 IEC61518 process connections
  - Deltabar M PMD55: all NPT1/4-18 IEC61518 process connections

PZO: Oval flange adapter for Deltabar

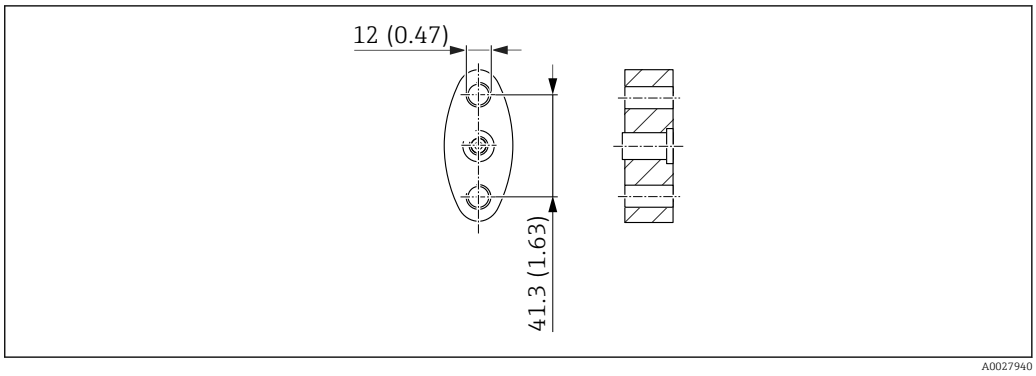

Unit of measurement mm (in)

Use

The oval flange adapter is used to connect the impulse lines to the oval flange process connection of the differential pressure transmitter (IEC 61518).

Technical data

"Steel" version

	"Steel" version [1) 2)]
Process connection	FNPT ½"-14 / JIS RC ¼"
Seal [3) 4)]	▪ PTFE: −10 to +80 °C (+14 to +176 °F) (in accordance with EN61518) ▪ FKM Viton
Securing screw [5)]	▪ 2x M10 securing screw, quality: 8.8 or ▪ 2x UNF 7/16-20 securing screw, quality: ASTM A449 Type 1
Additional options	Cleaned of oil+grease (oxygen use)

1) Product Configurator, order code for "Material", option "2"
2) Deltabar M: Product Configurator, order code for "Accessory enclosed", option "P1"
3) Alternative models (e.g. kidney flange), materials and seals available
4) Pay attention to the pressure and temperature limits of the measuring device!
5) Securing screws are optional

"316L" version

	"316L" version [1) 2)]
Process connection	FNPT ½"-14
Seal [3) 4)]	▪ PTFE: −10 to +80 °C (+14 to +176 °F) (in accordance with EN61518) ▪ FKM Viton
Securing screw [5)]	▪ 2x M10 securing screw, quality: A2-70 or ▪ 2x UNF 7/16-20 securing screw, quality: ASTM A193 B8M Class 2
Additional options	▪ Cleaned of oil+grease (oxygen use) ▪ EN10204-3.1 certificate

1) Product Configurator, order code for "Material", option "1"
2) Deltabar M: Product Configurator, order code for "Accessory enclosed", option "P1"
3) Alternative models (e.g. kidney flange), materials and seals available
4) Pay attention to the pressure and temperature limits of the measuring device!
5) Securing screws are optional

DA61V: Shutoff device for pipes

Use

Suitable for shutting off the impulse lines (e.g. for Deltatop flow applications).

The shutoff valve is designed to separate the measuring system from the measuring tube if leaks are discovered or if maintenance work needs to be performed on the impulse lines.

Installation and commissioning

The shutoff valves must be closed on completion of the installation. As part of routine commissioning, the shutoff valves must first be opened carefully and the integrity of the entire system checked to ensure it is leak-tight.

Shutoff assembly with screw-in bonnet

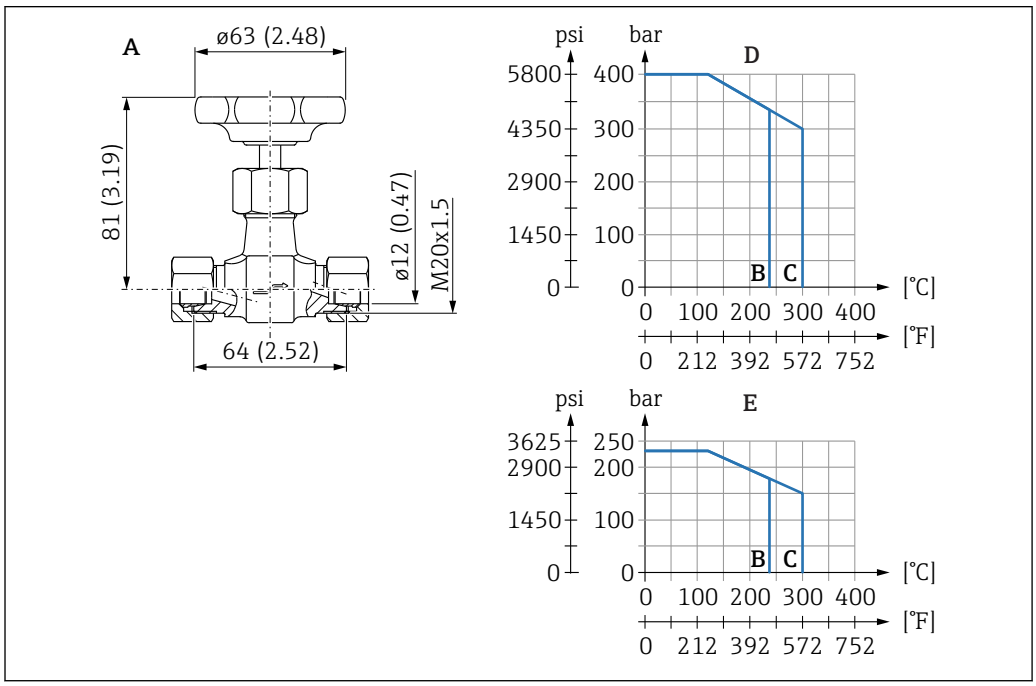

Unit of measurement mm (in)

A Inlet cutting ring; outlet cutting ring
B PTFE packing
C Pure graphite packing
D Series S
E Series L

Technical data

	"C22.8" version [1]	"316Ti" version [2]
Housing	1.0460	1.4571
Valve stem	1.4104	1.4571
Needle tip	1.4122	1.4571
Packing [3] [4]	▪ PTFE up to +230 °C (+446 °F) ▪ Pure graphite up to +300 °C (+572 °F)	▪ PTFE up to +230 °C (+446 °F) ▪ Pure graphite up to +300 °C (+572 °F)
Union nut	Steel	1.4571
Certificate [5]	3.1 Certificate	3.1 Certificate
Weight	0.47 kg (1.04 lb)	0.47 kg (1.04 lb)

1) Product Configurator, order code for "Material", option "C"
2) Product Configurator, order code for "Material", option "D"
3) Pay attention to the pressure and temperature limits of the measuring device!
4) The pressure and temperature limits of the assembly are related to one another (see pressure and temperature chart).
5) Product Configurator, order code for "Additional options", option "F1"

Shutoff assembly with integrated bonnet

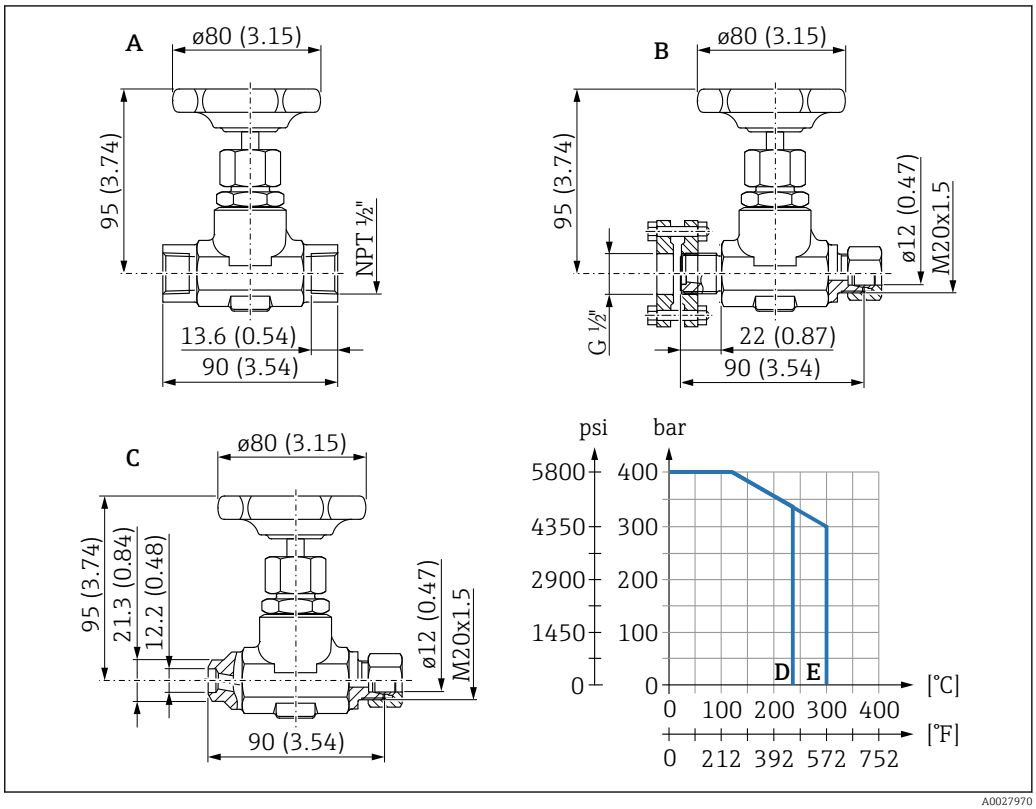

Unit of measurement mm (in)

A Inlet FNPT ½"; outlet FNPT ½"
B Inlet nipple DIN 19207 and threaded flanges; outlet cutting ring
C Inlet weld connection; outlet cutting ring
D PTFE packing
E Pure graphite packing

Technical data

	"C22.8" version [1]	"316Ti" version [2]
Housing	1.0460	1.4571
Bonnet	1.0501	1.4571
Valve seat	1.4571 / 1.4021	1.4571
Valve stem	1.4571 / 1.4021	1.4571
Needle tip	1.4122	1.4571
Packing [3] [4]	▪ PTFE up to +200 °C (+392 °F) ▪ Pure graphite up to +300 °C (+572 °F) ▪ Maximum 400 bar (5 800 psi)	▪ PTFE up to +230 °C (+446 °F) ▪ Pure graphite up to +300 °C (+572 °F) ▪ Maximum 400 bar (5 800 psi)
Union nut	Steel	1.4571
Certificate [5]	3.1 Certificate	
Weight	**A** [6]: 0.8 kg (1.76 lb); **B** [7]: 1.45 kg (3.2 lb), **C** [8]: 0.73 kg (1.61 lb)	

1) Product Configurator, order code for "Material", option "C"
2) Product Configurator, order code for "Material", option "D"
3) Pay attention to the pressure and temperature limits of the measuring device!
4) The pressure and temperature limits of the assembly are related to one another (see pressure and temperature chart).
5) Product Configurator, order code for "Additional options", option "F1"
6) Product Configurator, order code for "Inlet", option "C" and order code for "Outlet", option "C"
7) Product Configurator, order code for "Inlet", option "V" and order code for "Inlet", option "W"
8) Product Configurator, order code for "Inlet", option "E" and order code for "Inlet", option "K"

Shutoff assembly with integrated bonnet, high-temperature version

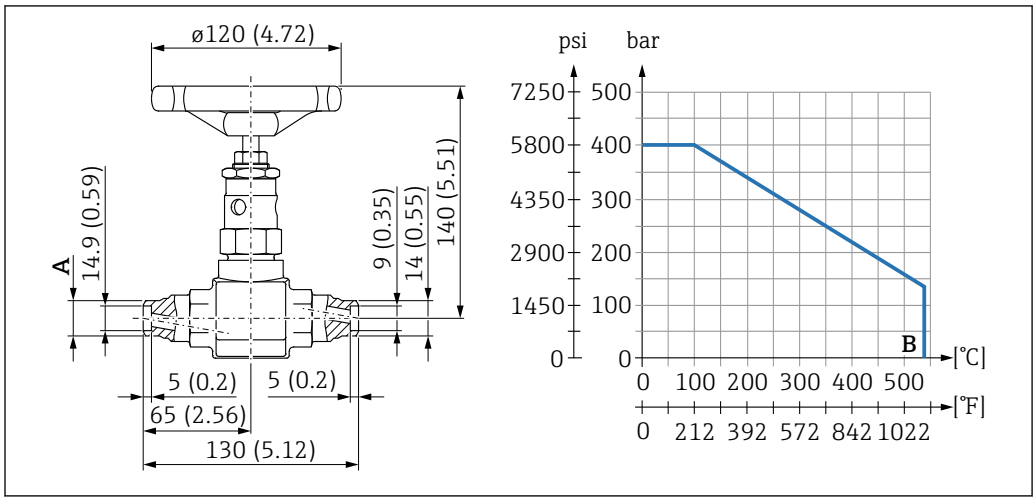

Unit of measurement mm (in)

A Weld connection, inlet 21.3 mm (0.84 in) or 17.2 mm (0.68 in); weld connection, outlet 14 mm (0.55 in)
B Pure graphite packing

Technical data

	"16Mo3" version [1]
Housing	1.5415
Bonnet	1.7709
Valve seat	1.4021
Valve stem	1.4021
Needle tip	1.4122
Packing [2] [3]	▪ Pure graphite: up to +530 °C (+986 °F) ▪ Maximum 400 bar (5 800 psi)
Union nut	Steel
Certificate [4]	3.1 Certificate
Weight	1.6 kg (3.53 lb)

1) Product Configurator, order code for "Material", option "G"
2) Pay attention to the pressure and temperature limits of the measuring device!
3) The pressure and temperature limits of the assembly are related to one another (see pressure and temperature chart).
4) Product Configurator, order code for "Additional options", option "F1"

PZW: Siphons for Cerabar and Ceraphant

Overview

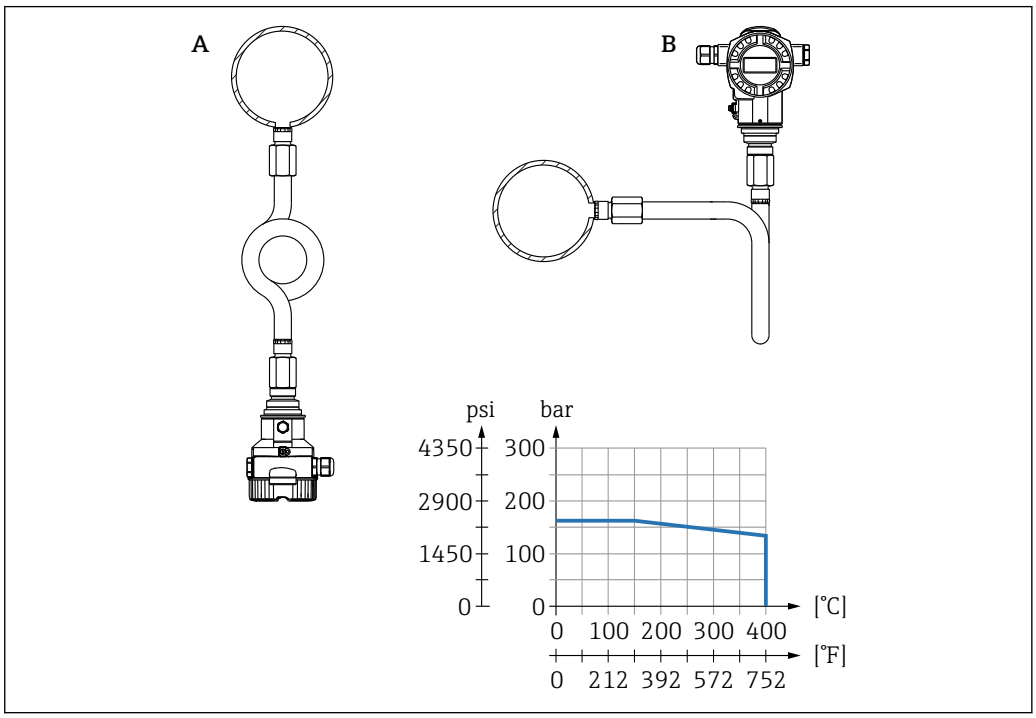

A O-shaped siphon. Suitable for vertical installation.
B U-shaped siphon. Suitable for horizontal installation.

Use

Siphons according to DIN 16282 are used to cool the medium. Suitable for liquids, gases and vapors.

Function

The pressure transmitter is separated from the process by the O-shaped pipe (vertical installation) or the U-shaped pipe (horizontal installation). In the event of damp gases and vapor, condensate also forms, causing an additional temperature reduction in relation to the process.

Pressure measurement in vapors

Use siphons for pressure measurement in vapors. The siphon reduces the temperature to almost ambient temperature. Fill the siphon with liquid before commissioning. Preferably mount the device with the siphon below the tapping point.

Advantages:
- defined water column only causes minimal/negligible measured errors
- only minimal/negligible thermal effects on the device

Mounting above the tapping point is also possible. Note the max. permitted ambient temperature of the device!

Cooling effect

The cooling effect depends on the pressure, medium and ambient temperature. Average cooling effect for gases: 50 to 100 °C (122 to 212 °F)(The cooling effect only applies to gases and not to vapors)

Siphons - O-shaped

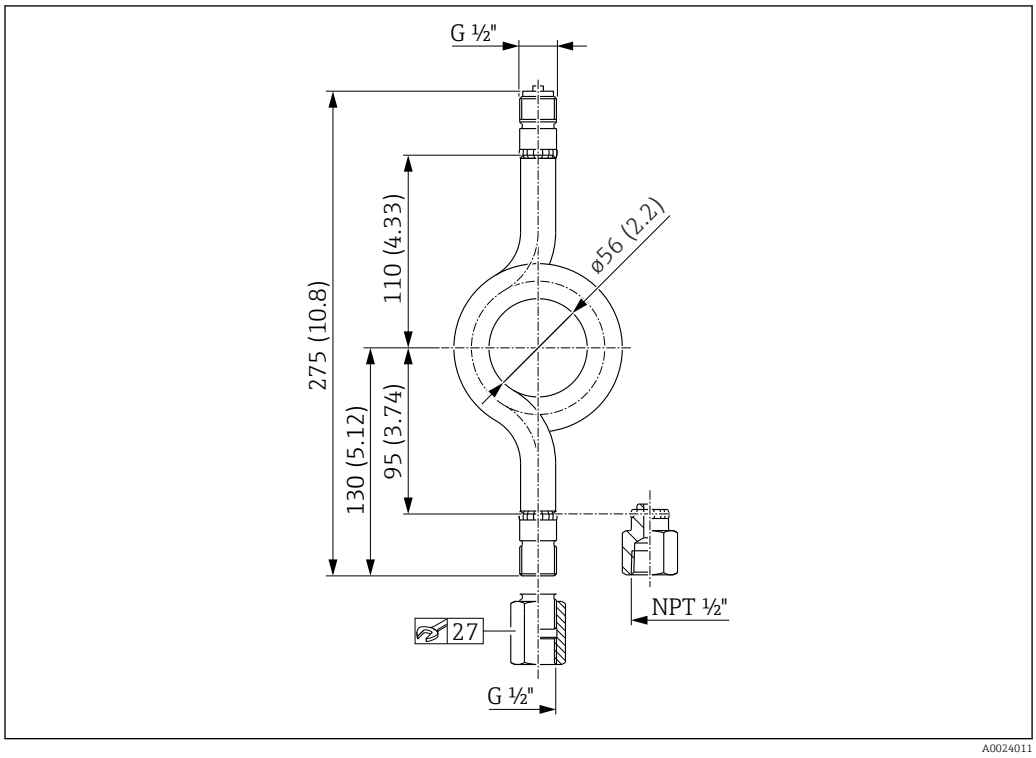

Unit of measurement mm (in)

Technical data

	"St35.8" version [1) 2)]	"316Ti" version [3) 2)]
Process connection [4)]	▪ FNPT ½" x MNPT ½" ▪ FNPT ½" x weld connection ▪ G ½" internal x G ½" ▪ G ½" internal x weld connection	
Pipe	ST35.8	316Ti
Maximum operating pressure	104 bar (1 508 psi) at 400 °C (752 °F)	
upstream from siphon (process side)	120 bar (1 740 psi) at 300 °C (572 °F)	
at maximum operating temperature [5)]	160 bar (2 320 psi) at 120 °C (248 °F)	
Additional options	Basic model	▪ Basic model ▪ EN10204-3.1 certificate

1) Product Configurator, order code for "Pressure tapping", option "2" and order code for "Pipe; seal", option "1"
2) Cerabar M: Product Configurator, order code for "Accessories enclosed", option "P4".
3) Product Configurator, order code for "Pressure tapping", option "2" and order code for "Pipe; seal", option "2"
4) Additional process connections available
5) Pay attention to the pressure and temperature limits of the measuring device!

U-shaped siphons

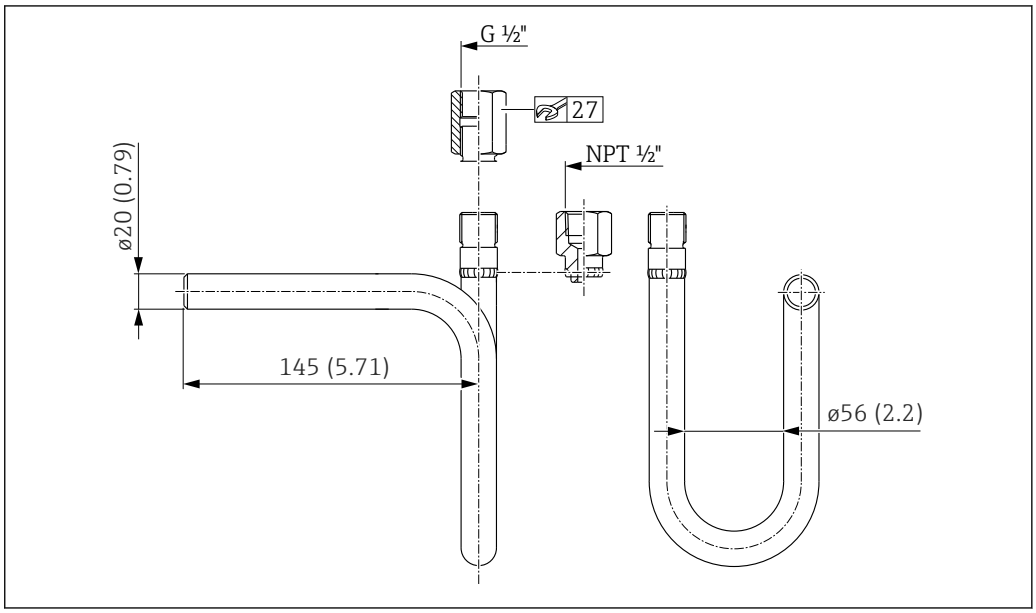

Unit of measurement mm (in)

Technical data

	"St35.8" version [1) 2)]	"316Ti" Version [3) 2)]
Process connection [4)]	▪ FNPT ½" x MNPT ½" ▪ FNPT ½" x weld connection ▪ G ½" internal x G ½" ▪ G ½" internal x weld connection	
Pipe	ST35.8	316Ti
Maximum operating pressure	104 bar (1 508 psi) at 400 °C (752 °F)	
upstream from siphon (process side)	120 bar (1 740 psi) at 300 °C (572 °F)	
at maximum operating temperature [5)]	160 bar (2 320 psi) at 120 °C (248 °F)	
Additional options	Basic model	▪ Basic model ▪ EN10204-3.1 certificate

1) Product Configurator, order code for "Pressure tapping", option "1" and order code for "Pipe; seal", option "1"
2) Cerabar M: Product Configurator, order code for "Accessories enclosed", option "P4".
3) Product Configurator, order code for "Pressure tapping", option "1" and order code for "Pipe; seal", option "2"
4) Additional process connections available
5) Pay attention to the pressure and temperature limits of the measuring device!

DA61C: Condensate pot for steam applications

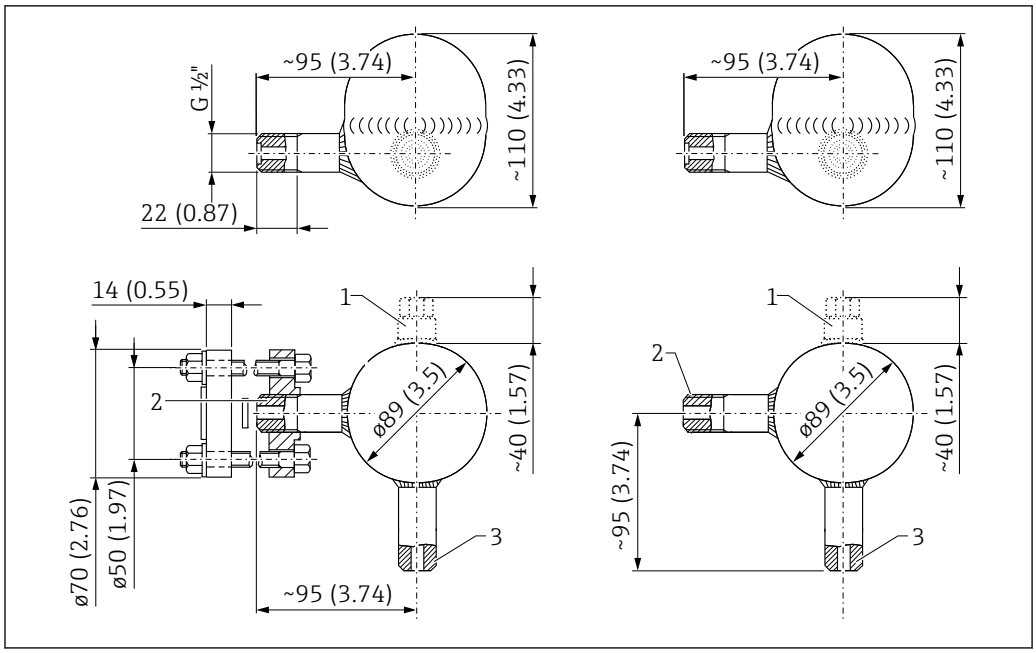

Unit of measurement mm (in)

1 *Filling cap, NPT ½ (optional)*
2 *From the primary device*
3 *To the differential pressure transmitter*

Use

For flow and level measurement applications in order to maintain constant conditions in the condensate columns. Excess condensate can flow back into the main pipe or vessel.

Design

Hot-pressed hemispherical heads welded together.

Technical data

"HII (265 GH)" version

	"HII (265 GH)" version [1]
Weight	1.7 kg (3.8 lb)
Volume	300 cm^3
Pressure, temperature [2]	PN 100, 300 °C (572 °F)
Filling cap	NPT ½"
Inlet	▪ Weld connection 21.3 mm (0.84 in) ▪ Nipple, weld connection 17.2 mm (0.68 in) ▪ G ½" DIN 19207 steel ▪ G ½" DIN 19207 stainless steel
Outlet	▪ Weld connection 21.3 mm (0.84 in) ▪ Nipple, 12 mm (0.47 in) ▪ Nipple G ½" DIN 19207
Certificate	3.1 Certificate [3]

1) Product Configurator, order code for "Material; volume; PN", option "B"
2) Pay attention to the pressure and temperature limits of the measuring device!
3) Product Configurator, order code for "Additional options", option "F1"

"316L" version

	"316L" version [1]
Weight	1.7 kg (3.8 lb)
Volume	300 cm^3
Pressure, temperature [2]	PN 100, 400 °C (752 °F)
Filling cap	NPT ½"
Inlet	▪ Weld connection 21.3 mm (0.84 in) ▪ Nipple, weld connection 17.2 mm (0.68 in) ▪ G ½" DIN 19207 steel ▪ G ½" DIN 19207 stainless steel
Outlet	▪ Weld connection 21.3 mm (0.84 in) ▪ Nipple, 12 mm (0.47 in) ▪ Nipple G ½" DIN 19207
Certificate	3.1 Certificate [3]

1) Product Configurator, order code for "Material; volume; PN", option "C"
2) Pay attention to the pressure and temperature limits of the measuring device!
3) Product Configurator, order code for "Additional options", option "F1"

"16Mo3" version

	"16Mo3" version [1]
Weight	2.2 kg (4.9 lb)
Volume	250 cm^3
Pressure, temperature [2]	PN 250, 500 °C (932 °F)
Filling cap	NPT ½"
Inlet	▪ Weld connection 21.3 mm (0.84 in) ▪ Nipple, weld connection 17.2 mm (0.68 in) ▪ G ½" DIN 19207 steel ▪ G ½" DIN 19207 stainless steel
Outlet	▪ Weld connection 21.3 mm (0.84 in) ▪ Nipple, 12 mm (0.47 in) ▪ Nipple G ½" DIN 19207
Certificate	3.1 Certificate [3]

1) Product Configurator, order code for "Material; volume; PN", option "K"
2) Pay attention to the pressure and temperature limits of the measuring device!
3) Product Configurator, order code for "Additional options", option "F1"

Mounting bracket for DA63M

Use

If the transmitter is mounted on a shutoff device (e.g. manifold or shutoff valve), it is recommended to use the bracket provided. This makes it easier to disassemble the transmitter. Alternatively, the transmitter can be mounted directly via a mounting bracket (→ 36).

Mounting bracket for block & bleed valve

The block & bleed valve can be mounted on walls or pipes with the mounting bracket.

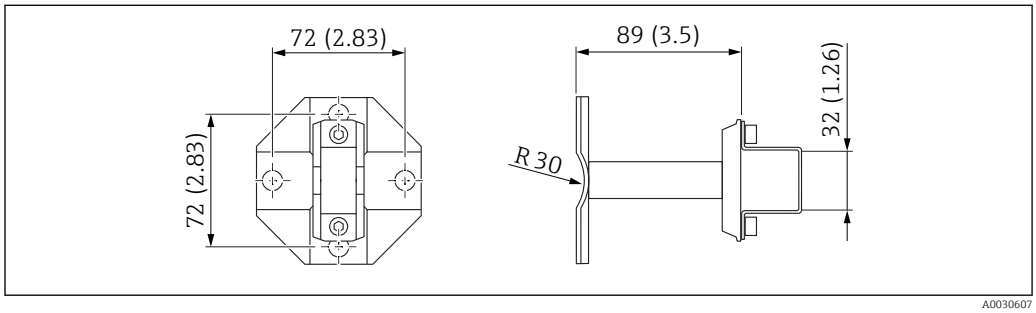

Unit of measurement mm (in)

The mounting bracket set contains:
- 1 mounting bracket
- 1 U-bolt
- 2 Allen screws ISO4762 - M6x10
- 1 U-fixing bracket M8 for 2" pipe
- 2 washers 8.4 DIN 125-B
- 2 hexagonal nuts DIN EN 24032-M8

Ordering information

- Order number: 71372498
- Product structure for DA63M: Product Configurator, order code for "Additional options", option "EC"

Mounting bracket for 3-valve and 5-valve manifold

If the transmitter is mounted on a shutoff device (e.g. manifold or shutoff valve), it is recommended to use the bracket provided. This makes it easier to disassemble the transmitter.

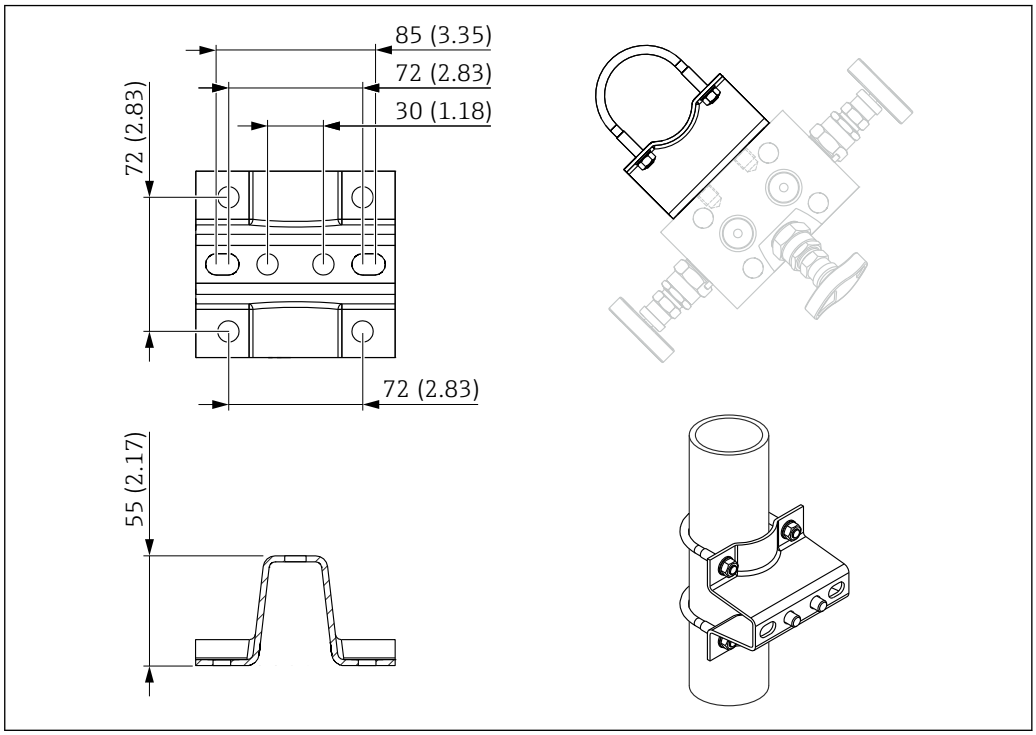

Unit of measurement mm (in)

The mounting bracket set contains:
- 1 mounting bracket
- 2 "U" bolts
- 4 washers – 8.4
- 4 hexagonal nuts M8
- 2 washers – 10.5
- 2 hexagonal-headed bolts M10x14
- 2 hexagonal-headed bolts 3/8-16 UNC x 5/8"

Ordering information

Order number:
- Steel: 71271156
- Stainless steel: 71372499
- Product structure for DA63M: Product Configurator, order code for "Additional options", option "EA" or "EB".

Mounting bracket for Deltabar

Typical installation arrangements

Deltabar M PMD55

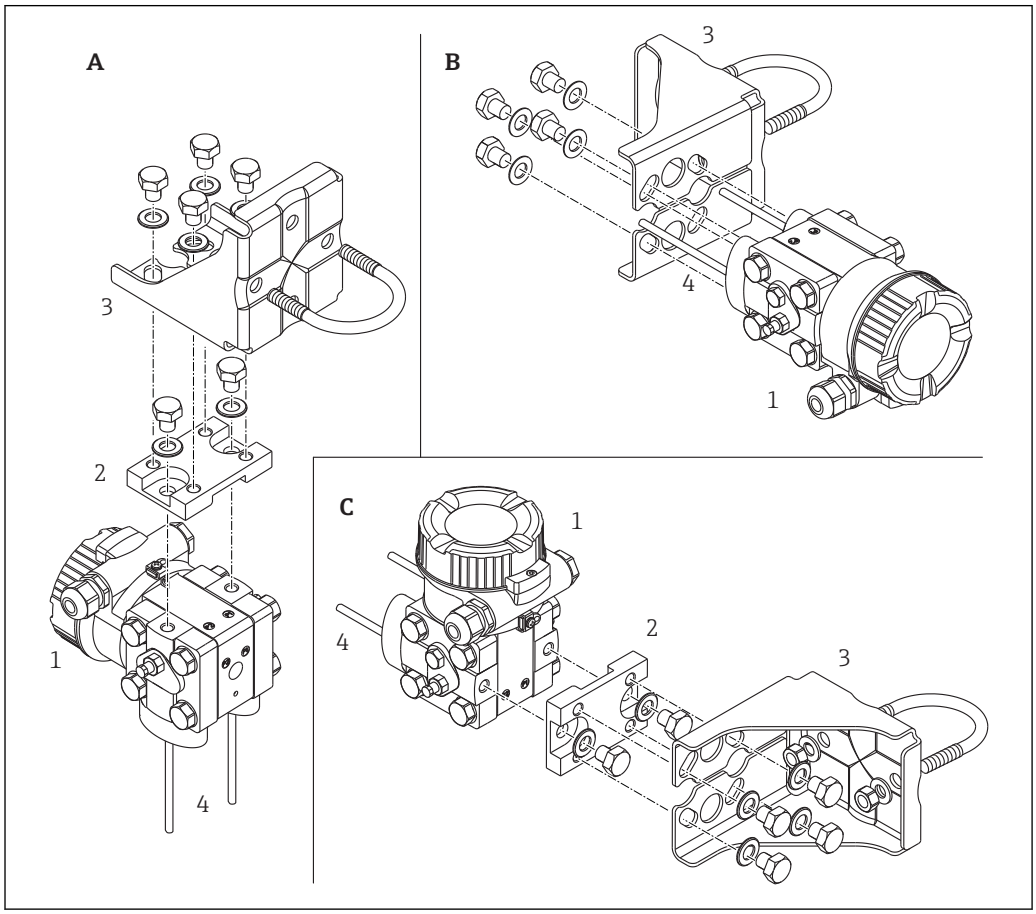

A Impulse line vertical, version V1, alignment 90°
B Impulse line horizontal, version H1, alignment 180°
C Impulse line horizontal, version H2, alignment 90°
1 Measuring device
2 Adapter plate
3 Mounting bracket
4 Pressure line

Deltabar S PMD75

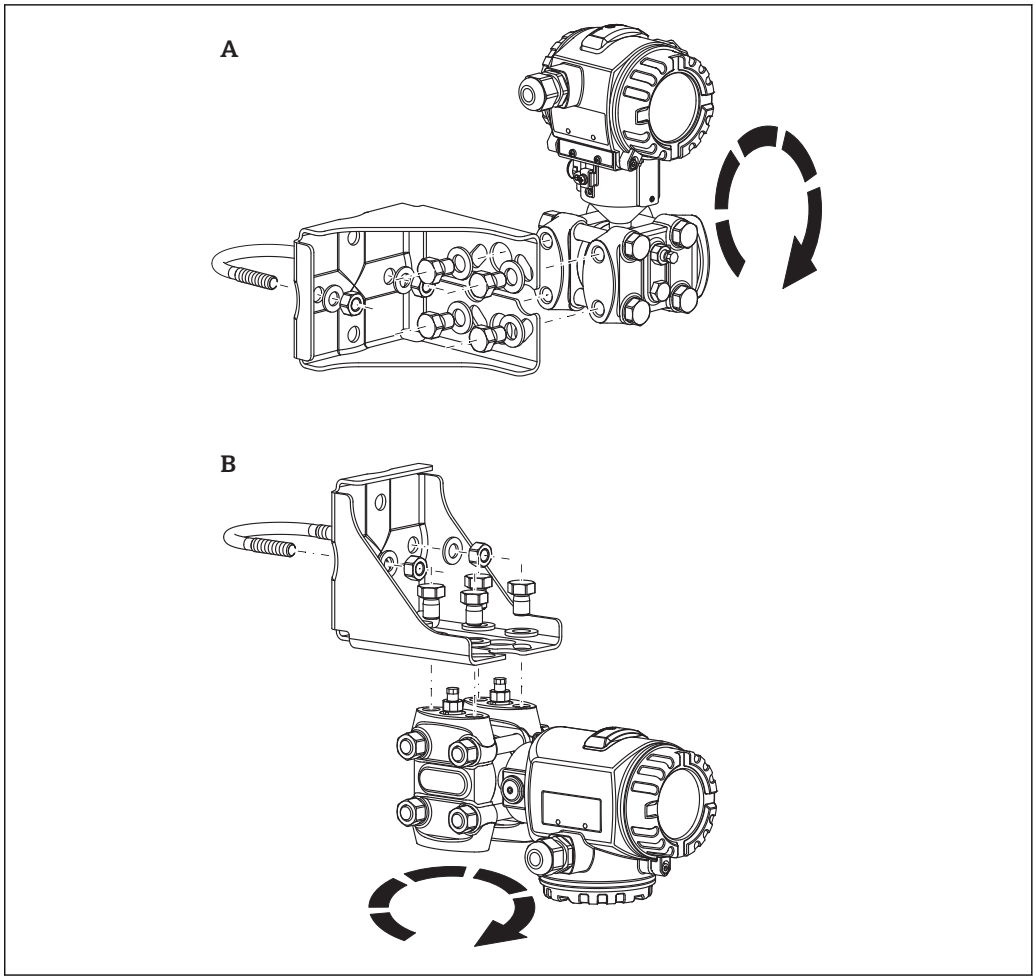

1 Can be arranged in 90° stages

A Sample arrangement with T14 housing
B Sample arrangement with T15 housing

Standard version

Mounting bracket for wall and pipe mounting including retaining bracket for pipe mounting and two nuts.

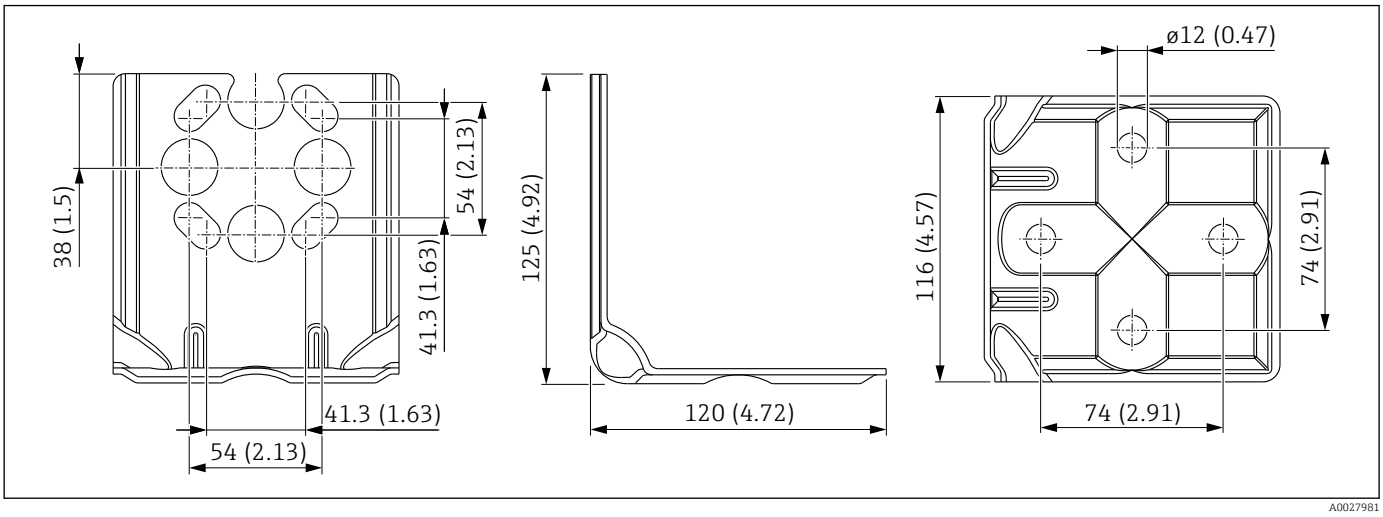

Unit of measurement mm (in)

Ordering information for Deltabar M PMD55

Component part	Material	Screw version [1]	Accessory and spare part number
Mounting bracket with screws	Mounting bracket: 316L (1.4404) Screws: A4-70	▪ 7/16 UNF ▪ M10	▪ 71381907 ▪ 71435883
Adapter plate with screws	Adapter plate: AISI 316L Screws: A4-70	▪ 7/16 UNF ▪ M10	▪ 71098632 ▪ 71101935
Screw set including washers	Screws: A4-70	▪ 7/16 UNF ▪ M10	▪ 943153-0031 ▪ 943153-0011

1) Depends on the selected process connection

Ordering information for Deltabar S PMD75

Component part	Material	Screw version [1]	Accessory and spare part number
Mounting bracket with screws	Mounting bracket: 316L (1.4404) Screws: A4-70	▪ 7/16 UNF ▪ M10 ▪ M12	▪ 71381907 ▪ 71435883 ▪ 71435884
Screw set including washers	Screws: A4-70	▪ 7/16 UNF ▪ M10 ▪ M12	▪ 943153-0031 ▪ 943153-0011 ▪ 943153-0021

1) Depends on the selected process connection

Heavy-duty version

Mounting bracket for wall and pipe mounting including retaining bracket for pipe mounting and two nuts.

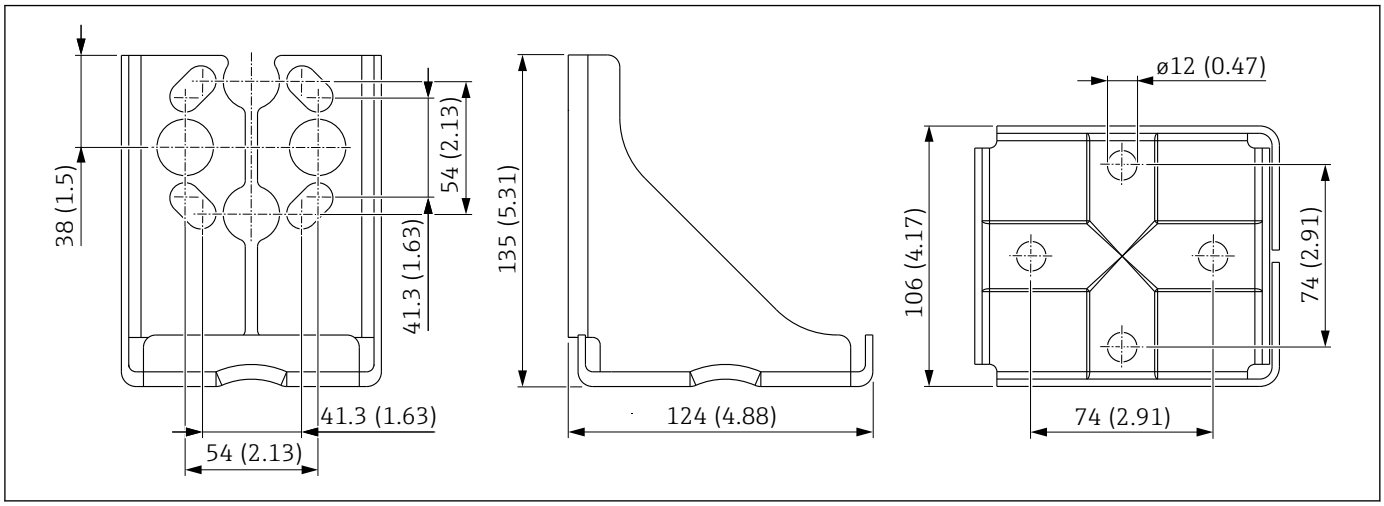

Unit of measurement mm (in)

Ordering information for Deltabar M PMD55

Component part	Material	Screw version [1]	Accessory and spare part number
Mounting bracket with screws	Mounting bracket: 316L (1.4404) Screws: A4-70	▪ 7/16 UNF ▪ M10	▪ 52024609 ▪ 52024611
Adapter plate with screws	Adapter plate: AISI 316L Screws: A4-70	▪ 7/16 UNF ▪ M10	▪ 71098632 ▪ 71101935
Screw set including washers	Screws: A4-70	▪ 7/16 UNF ▪ M10	▪ 943153-0031 ▪ 943153-0011

1) Depends on the selected process connection

Ordering information for Deltabar S PMD75

Component part	Material	Screw version [1]	Accessory and spare part number
Mounting bracket with screws	Mounting bracket: 316L (1.4404) Screws: A4-70	▪ 7/16 UNF ▪ M10 ▪ M12	▪ 52024609 ▪ 52024611 ▪ 52024610
Screw set including washers	Screws: A4-70	▪ 7/16 UNF ▪ M10 ▪ M12	▪ 943153-0031 ▪ 943153-0011 ▪ 943153-0021

1) Depends on the selected process connection

Mounting bracket for Cerabar and Deltapilot

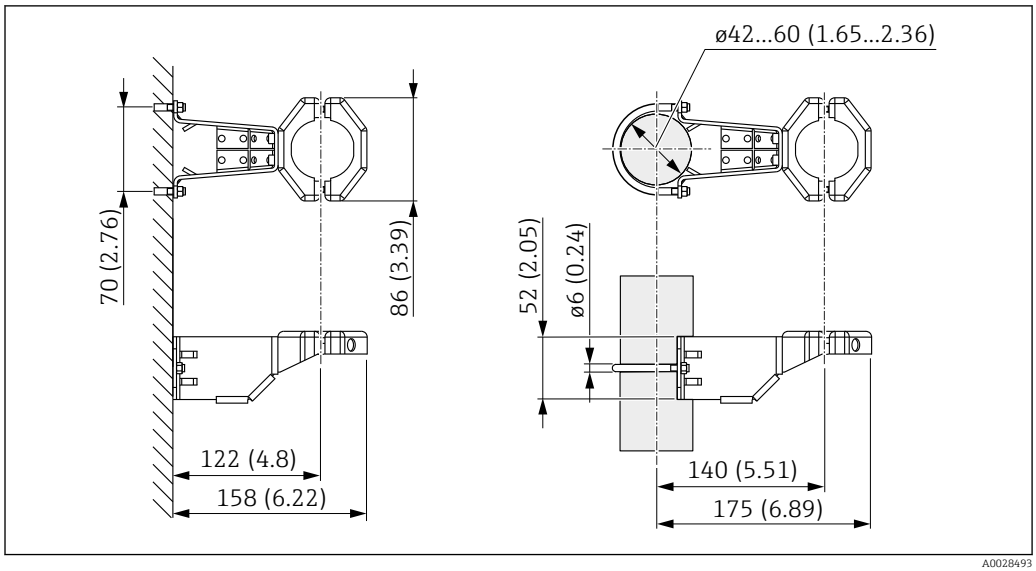

Unit of measurement mm (in)

Material: 316L (1.4404)

Ordering information

- Order number: 71102216
- Product Configurator, order code for "Accessories enclosed", option "PA"

Test adapter for Waterpilot and Deltapilot

Use

Test adapter for level probe for functional testing or calibration under pressure.

Test adapter

Test adapter for level probe with outer diameter 22 mm (0.87 in) or 29 mm (1.14 in)

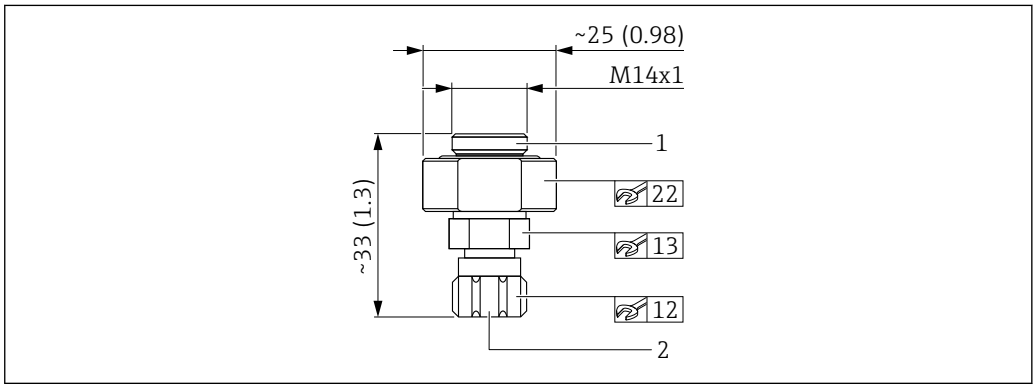

Unit of measurement mm (in)

1 Level probe connection
2 Compressed air hose connection, internal diameter, quick coupling piece 4 mm (0.16 in)

- Observe the maximum pressure for compressed air hose and maximum overload for level probe
- Maximum pressure for the quick coupling piece provided: 10 bar (145 psi)
- Adapter material: 304 (1.4301)
- Material of quick coupling piece: anodized aluminum
- Order number 52011868

Test adapter for level probe with outer diameter 42 mm (1.65 in)

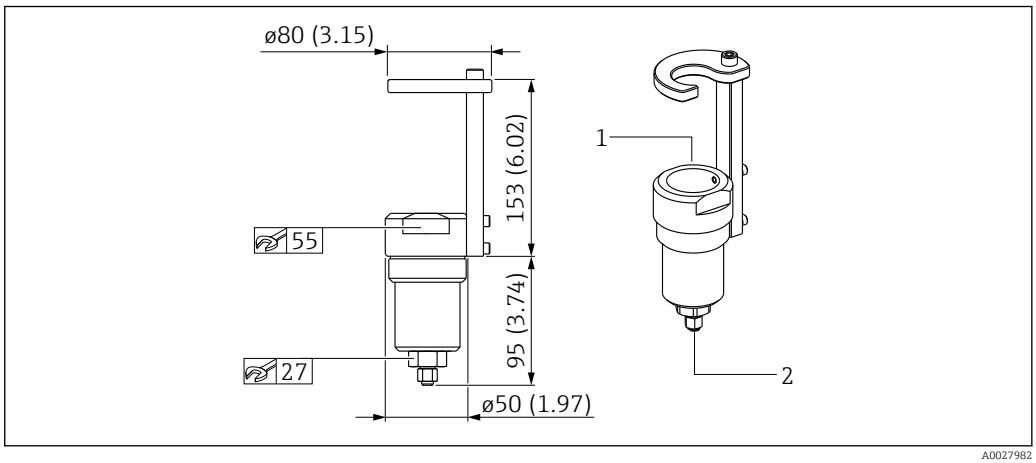

Unit of measurement mm (in)

1 Level probe connection
2 Compressed air hose connection

- Observe the maximum pressure for compressed air hose and maximum overload for level probe
- Maximum pressure for the quick coupling piece provided: 10 bar (145 psi)
- Adapter material: 304 (1.4301)
- Material of quick coupling piece: anodized aluminum
- Order number 71110310

Cable shortening kit for Waterpilot and Deltapilot

Use	The cable shortening kit is used to shorten a cable easily and professionally.
Ordering information for Waterpilot	Order number: 71222671 Ordering information: Product Configurator, order code for "Accessories enclosed" option "PW" Associated documentation SD00552P/00/A6. The cable shortening kit is not designed for the FMX21 with FM/CSA approval.
Ordering information for Deltapilot	Order number: 71125862 Ordering information: Product Configurator, order code for "Accessories enclosed" option "PW" Associated documentation SD00553P/00/A6.

Protective roofs

316L protective roof

Use

To protect the transmitter from direct sunshine, precipitation and ice.

Overview

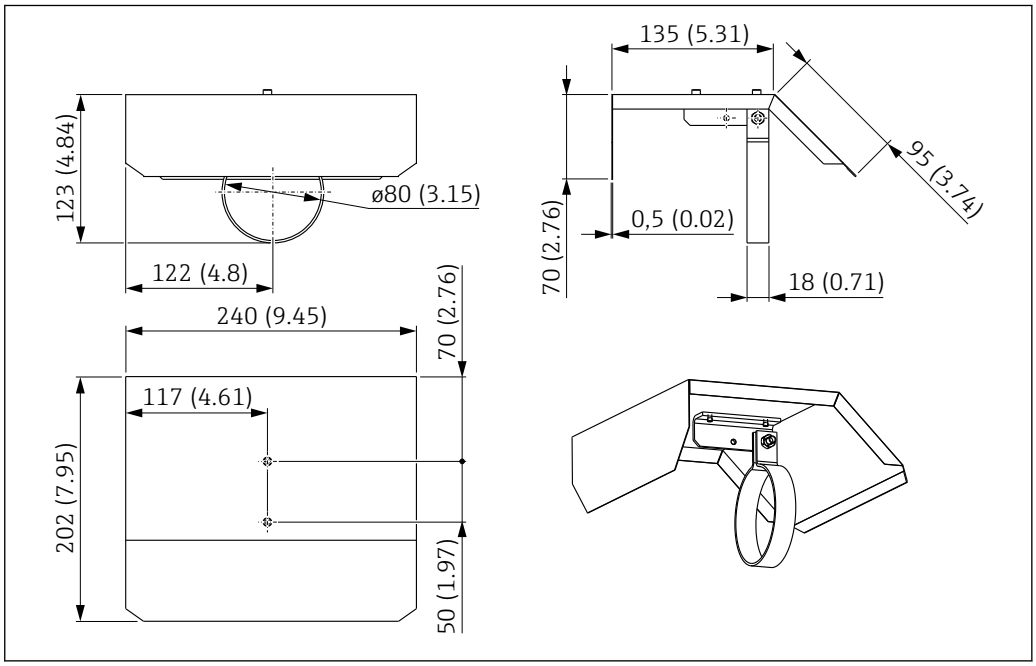

Unit of measurement mm (in)

Protective roof for Cerabar S, Deltabar S and Deltapilot S transmitters with T14 aluminum housing and display.

Including bracket for direct installation on the transmitter housing.

Protective roofs are also available for Cerabar M with F31 and F15 housing.

Technical data

Materials:
- Protective roof: 316L
- Weight: 0.48 kg (1.06 lb)
- Clamping screw: A4
- Bracket: 316L

Endress+Hauser offers protective roofs as **T**echnical **S**pecial **P**roducts (TSP).

For further information please contact your local Endress+Hauser Sales Center.

PVC protective roof

Use

To protect the transmitter from direct sunshine, precipitation and ice.

Overview

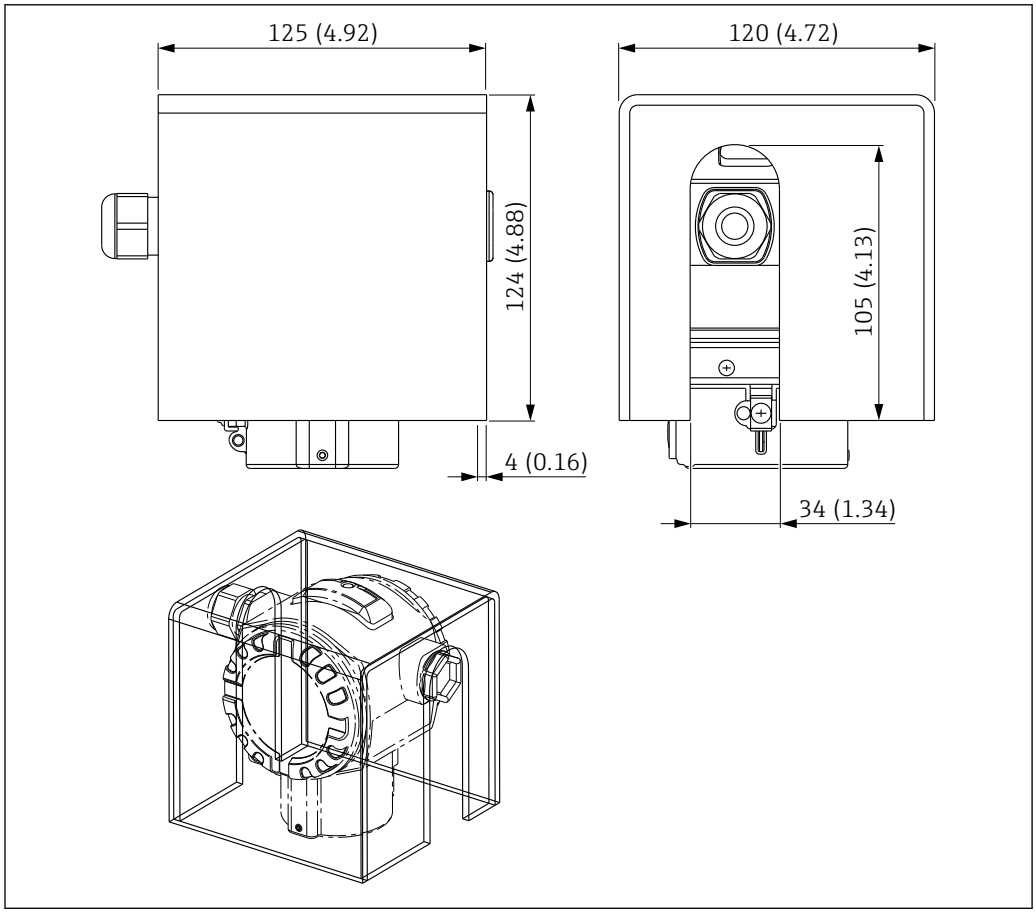

Unit of measurement mm (in)

Protective roof for Cerabar S, Deltabar S and Deltapilot S transmitters with T14 aluminum housing and display.

Technical data

Material: PVC (4 mm (0.16 in))

Endress+Hauser offers protective roofs as **T**echnical **S**pecial **P**roducts (TSP).

For further information please contact your local Endress+Hauser Sales Center.

Welding flanges and weld-in adapters

For details refer to TI00426F "Weld-in adapters, process adapters and flanges".

Flushing rings

Use flushing rings if there is a risk of medium buildup or clogging at the process connection. The flushing ring is fitted between the process connection and the process connection provided by the customer. Using the two lateral flushing holes, medium buildup or clogging in front of the process isolating diaphragm can be rinsed away and the pressure chamber vented. Various nominal widths and forms allow adaption to the respective process flange.

Overview

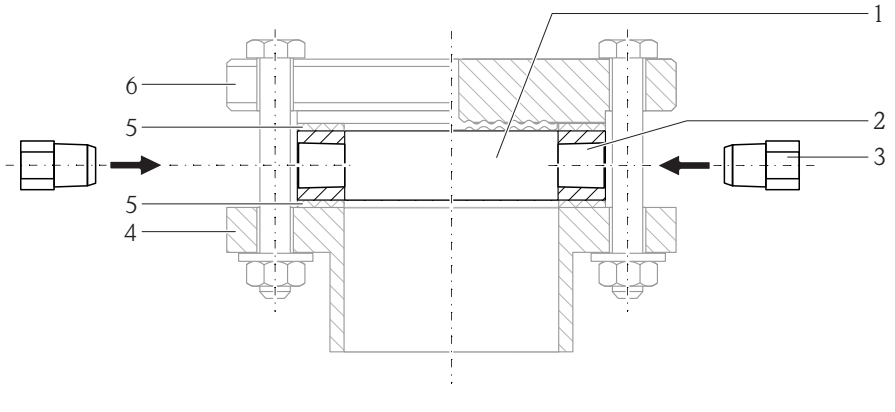

1 *Flushing ring*
2 *Flushing hole*
3 *Locking screws 1/2 NPT (use suitable sealing material!)*
4 *Process connection provided by customer*
5 *Seals*
6 *Process connection of measuring device*

Technical data

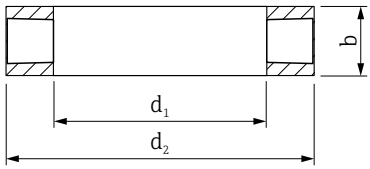

Material	Nominal diameter	Nominal pressure [1]	d_1	d_2	b	Weight
AISI 316L	EN1092-1		[mm]	[mm]	[mm]	[kg (lb)]
	DN25	PN16-400	30	68	30	0.72 kg (1.59 lb)
	DN50	PN16-400	63	102	30	1.24 kg (2.73 lb)
	DN80	PN16-400	93	138	30	1.96 kg (4.32 lb)
	ASME B16.5		[in]	[in]	[in]	
	NPS 1"	Class 150-2500	1.18	2.2	1.18	0.56 kg (1.23 lb)
	NPS 2"	Class 150-2500	2.44	3.62	1.18	1.00 kg (2.21 lb)
	NPS 3"	Class 150-2500	3.62	5	1.18	1.56 kg (3.44 lb)

1) The specified nominal pressure applies to the flushing ring. The maximum pressure for the measuring device is dependent on the lowest-rated element, with regard to pressure, of the selected components.

Rinse connection

- ASME FNPT 1/2
- 2 x thread (use suitable sealing material!)
- Including 2 lock screws, 316L

Ordering information

Cerabar

Flushing rings can be ordered as a separate accessory or as an order option for the device.

Material	Nominal diameter	Approval [1]	Accessory [2] Part number	Order option [3] [4]	
				PMP55	PMP75
AISI 316L	EN1092-1				
	DN25	-	71377379	PO	PO
	DN50	-	71377380	PP	PP
	DN80	-	71377383	PQ	PQ
	ASME B16.5				
	NPS 1"	-	71377369	PK	PK
	NPS 2"	CRN	71377370	PL	PL
	NPS 3"	CRN	71377371	PM	PM

1) CSA approval: Product Configurator, order code for "Approval"
2) Inspection certification according to EN10204-3.1 material
3) Product Configurator order code for "Accessories enclosed"
4) Certificates ordered with the equipment (3.1 material certificate and NACE declaration of conformity and PMI tests) apply to the transmitters and flushing rings listed in the table.

Endress+Hauser offers additional flushing rings as **T**echnical **S**pecial **P**roducts (TSP).

Deltabar

Flushing rings can be ordered as a separate accessory or as an order option for the device.

Material	Nominal diameter	Approval [1]	Accessory [2] Part number	Order option [3] [4]	
				FMD77	FMD78 [5]
AISI 316L	EN1092-1				
	DN25	-	71377379	-	-
	DN50	-	71377380	PP	PP
	DN80	-	71377383	PQ	PQ
	ASME B16.5				
	NPS 1"	-	71377369	-	-
	NPS 2"	CRN	71377370	PL	PL
	NPS 3"	CRN	71377371	PM	PM

1) CSA approval: Product Configurator, order code for "Approval"
2) Inspection certification according to EN10204-3.1 material
3) Product Configurator order code for "Accessories enclosed"
4) Certificates ordered with the equipment (3.1 material certificate and NACE declaration of conformity and PMI tests) apply to the transmitters and flushing rings listed in the table.
5) Scope of delivery: 2 x

Endress+Hauser offers additional flushing rings as **T**echnical **S**pecial **P**roducts (TSP).

Ordering information

Detailed ordering information is available from the following sources:
- In the Product Configurator on the Endress+Hauser website: www.endress.com -> Click "Corporate" -> Select your country -> Click "Products" -> Select the product using the filters and search field -> Open product page -> The "Configure" button to the right of the product image opens the Product Configurator.
- From your Endress+Hauser Sales Center: www.addresses.endress.com

Product Configurator - the tool for individual product configuration
- Up-to-the-minute configuration data
- Depending on the device: Direct input of measuring point-specific information such as measuring range or operating language
- Automatic verification of exclusion criteria
- Automatic creation of the order code and its breakdown in PDF or Excel output format
- Ability to order directly in the Endress+Hauser Online Shop

Supplementary documentation

Field of Activities	Pressure measurement, powerful instruments for process pressure, differential pressure, level and flow: FA00004P/00/
Field of Activities	System components and data manager solutions to complete your measuring point: FA00016K/09/

71447003

www.addresses.endress.com

Endress+Hauser

People for Process Automation