XA02838C/07/EN/01.21-00
71559833
2021-11-16

Safety Instructions
Memosens COS81E

KOR Ex ia op is IIC T6… T3 Ga
KOR Ex ia op is IIIC T90°C… T200°C Da

Safety instructions for electrical apparatus in explosion-hazardous areas

Endress+Hauser
People for Process Automation

Memosens COS81E

KOR Ex ia op is IIC T6… T3 Ga
KOR Ex ia op is IIIC T90°C… T200°C Da

Table of contents

Associated documentation

This document is an integral part of Operating Instructions BA02066C.

Supplementary documentation

Competence Brochure CP00021Z
- Explosion Protection: Guidelines and General Principles
- www.endress.com

Identification

The nameplate provides you with the following information on your device:
- Manufacturer identification
- Order code
- Extended order code
- Serial number
- Safety information and warnings
- Ex marking on hazardous area versions

▶ Compare the information on the nameplate with the order.

Ex-approval

KoreaEx

Ex ia op is IIC T6... T3 Ga (21-KA4BO-0437X)
Ex ia op is IIIC T90°C... T200°C Da (21-KA4BO-0438X)

Notified body

KTL - Korea Testing Laboratory

Safety instructions

The Memosens COS81E oxygen sensor is suitable for use in hazardous areas in accordance with:
KoreaEx certificates **21-KA4BO-0437X and 21-KA4BO-0438X**

- A maximum ambient temperature of 90 °C (194 °F) must not be exceeded at the sensor head.
- Oxygen sensors for use in hazardous areas have a special conductive O-ring. The electrical connection of the metallic sensor shaft to the conductive mounting location (such as a metallic assembly) is via the O-ring.
- Appropriate measures must be taken to connect the assembly or the mounting location to ground in accordance with the Ex guidelines.
- The sensors must not be operated under electrostatically critical process conditions. Avoid strong steam or dust currents that act directly on the connection system.
- The plastic housing may only be cleaned with a damp cloth.

- Hazardous area versions of digital sensors with Memosens technology are marked by an orange/red ring on the plug-in head.
- The maximum permitted cable length between the sensor and transmitter is 100 m (330 ft).
- When using devices and sensors, observe the regulations for electrical systems in hazardous areas (IEC 60079-14).
- The procedures for electrical connection described in the Operating Instructions must be followed.
- This device has been developed and manufactured in accordance with the following standards:
  - IEC 60079-0:2017 Explosive atmospheres - Part 0: Equipment - General requirements
  - IEC 60079-11:2011 + Cor.:2012 Explosive atmospheres - Part 11: Equipment protection by intrinsic safety "i"
  - IEC 60079-28:2015 Explosive atmospheres - Part 28: Protection of equipment and transmission systems using optical radiation
- Sensors containing parts made of titanium or other light metals must be protected against impact.

Type code

Memosens	COS81E-aabbccdde+g	
	aa	Approval (no ex-relevance) **KF:** Ex ia op is IIC T6 ... T3 Ga **K5:** Ex ia op is IIC T6 ... T3 Ga + Ex ia op is IIIC T90°C... T200°C Da
	bb	Measuring range (no ex-relevance)
	cc	Cap characteristics AC = Stainless steel C-shape AU = Stainless steel U-shape BC = Titanium C-shape BU = Titanium U-shape CC = Alloy C22 C-shape CU = Alloy C22 U-shape YY = Special version
	dd	Sensor length (no ex-relevance) max. 600 mm
	e	Material of O-ring (in the cap) (no ex-relevance)
	g	Optional = one or more characters determining optional features (no ex-relevance), e.g. test or other certificates/ declarations

Temperature table

Sensor	Process temperature T_p	Ambient temperature T_a
COS81E	-15 ≤ T_p ≤ 130 °C (T3 rep. T200 °C) -15 ≤ T_p ≤ 120 °C (T4 rep. T135 °C) -15 ≤ T_p ≤ 70 °C (T6 rep. T90°C)	-25 ≤ T_a ≤ 70 °C (T3 rep. T200 °C) -25 ≤ T_a ≤ 90 °C (T4 rep. T135 °C) -25 ≤ T_a ≤ 70 °C (T6 rep. T90°C)

The above temperature table applies only under the following installation conditions, which are described in the following graphic → 🗎 7. If the installation conditions cannot be met, the maximum process temperature T_p must not exceed the maximum ambient temperature T_a.

Connection

Ex specification

The approved Memosens COS81E digital oxygen sensor has an intrinsically safe input with the following parameter set:

Parameter	Value
P_i	180 mW

The approved Memosens COS81E digital oxygen sensor uses inherently safe optical radiation:

Parameter	Value
P_{opt} (sensor signal)	≤15 mW

The approved Memosens COS81E digital oxygen sensor must be connected to a Memosens cable or cable transmitter with intrinsically safe output with the following parameter:

Parameter	Value
P_o	max. 180 mW

Installation conditions

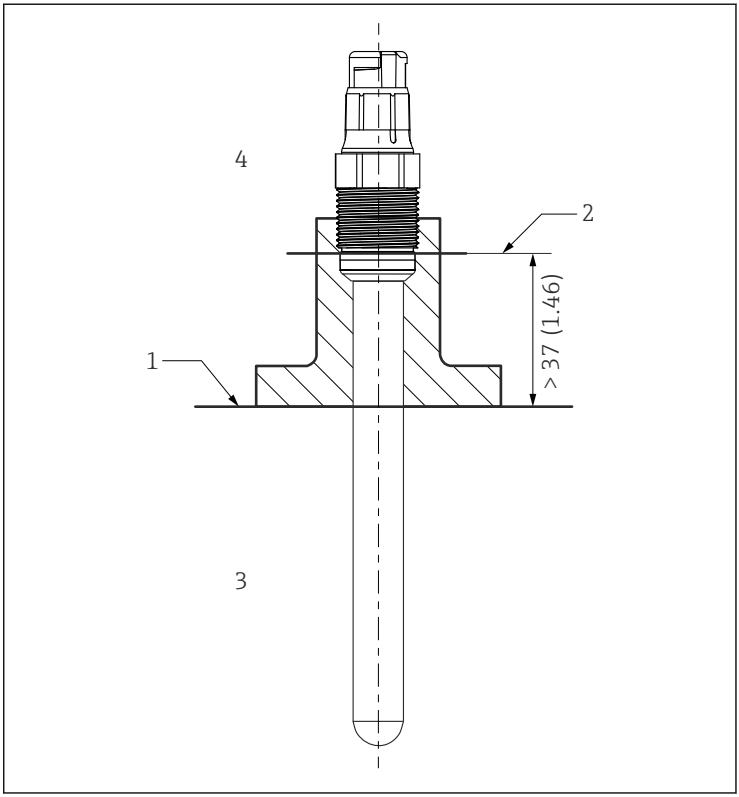

1 Installation conditions

1 *Limit*
2 *Distance between plug-in head (lower edge) and process medium, without ring and thrust collar*
3 *Process temperature range T_p*
4 *Ambient temperature range T_a*

71559833

www.addresses.endress.com

Endress+Hauser

People for Process Automation