TI01130P/00/EN/10.25-00
71719611
2025-08-26

Technical Information
Ceraphant PTC31B, PTP31B

Process pressure measurement

Pressure switch for safe measurement and monitoring of absolute and gauge pressure

Application

The Ceraphant is a pressure switch for the measurement of absolute and gauge pressure in gases, vapors, liquids and dust. The Ceraphant can be used internationally thanks to a wide range of approvals and process connections.

Your benefits

- High reproducibility and long-term stability
- Reference accuracy: up to 0.3%
- Customized measuring ranges
  - Turn down up to 5:1
  - Sensor for measuring ranges up to 400 bar (6 000 psi)
- Housing and process isolating diaphragm made of 316L
- Optionally available with IO-Link

Operation and electrical connection in accordance with VDMA 24574-1:2008

Endress+Hauser
People for Process Automation

Table of contents

About this document . . . 4
Graphic conventions . . . 4
Symbols . . . 4
Documentation . . . 5
Terms and abbreviations . . . 6
Turn down calculation . . . 6

Function and system design . . . 7
Measuring principle - process pressure measurement . . . 7
Measuring system . . . 7
Device features . . . 8
Product design . . . 9
System integration . . . 10

Input . . . 11
Measured variable . . . 11
Measuring range . . . 11

Output . . . 13
Output signal . . . 13
Range of adjustment . . . 13
Relay switching capacity . . . 13
Signal range 4 to 20 mA . . . 13
Load (for devices with analog output) . . . 13
Signal on alarm 4 to 20 mA . . . 14
Dead time, time constant . . . 14
Dynamic behavior . . . 14
Dynamic behavior of switch output . . . 15
Damping . . . 15

Power supply . . . 16
Terminal assignment . . . 16
Supply voltage . . . 17
Current consumption and alarm signal . . . 17
Power supply fault . . . 17
Electrical connection . . . 17
Cable specification (analog) . . . 18
Residual ripple . . . 18
Influence of power supply . . . 18
Overvoltage protection . . . 18

Performance characteristics of the ceramic process membrane . . . 19
Reference conditions . . . 19
Uncertainty of measurement for small absolute pressure ranges . . . 19
Influence of orientation . . . 19
Resolution . . . 19
Reference accuracy . . . 19
Thermal change of the zero output and the output span . . . 19
Long-term stability . . . 19
Switch-on time . . . 20

Performance characteristics of metallic process membrane . . . 21
Reference conditions . . . 21
Uncertainty of measurement for small absolute pressure ranges . . . 21
Influence of orientation . . . 21
Resolution . . . 21
Reference accuracy . . . 21
Thermal change of the zero output and the output span . . . 21
Long-term stability . . . 21
Switch-on time . . . 21

Mounting . . . 22
Installation conditions . . . 22
Influence of orientation . . . 22
Mounting location . . . 22
Mounting instructions for oxygen applications . . . 24

Environment . . . 25
Ambient temperature range . . . 25
Storage temperature range . . . 25
Climate class . . . 25
Degree of protection . . . 25
Vibration resistance . . . 25
Electromagnetic compatibility . . . 25

Process . . . 26
Process temperature range for devices with ceramic process membrane . . . 26
Process temperature range for devices with metallic process membrane . . . 26
Pressure specifications . . . 26

Mechanical construction . . . 27
Design, dimensions . . . 27
Electrical connection . . . 27
Housing . . . 28
Process connections with internal, ceramic process membrane . . . 29
Process connections with internal, ceramic process membrane . . . 30
Process connections with internal, ceramic process membrane . . . 31
Process connections with internal, ceramic process membrane . . . 31
Process connections with internal, metallic process membrane . . . 32
Process connections with internal, metallic process membrane . . . 33
Process connections with internal, metallic process membrane . . . 34
Process connections with internal, metallic process membrane . . . 34
Process connections with flush-mounted, metallic process membrane . . . 35
Materials in contact with process . . . 36
Materials not in contact with process . . . 37
Cleaning . . . 38

Operability . . . 39
IO-Link . . . 39

Operation with local display 39
Device Search (IO-Link) 40

Certificates and approvals 41
CE mark 41
RoHS 41
RCM marking 41
Safety Instructions (XA) 41
Pressure Equipment Directive 2014/68/EU (PED) 41
External standards and guidelines 42
CRN approval 42
Calibration unit 42
Calibration 43
Inspection certificates 43

Ordering information 43
Scope of delivery 43

Accessories 44
Weld-in adapter 44
M12 plug connectors 44

Supplemental documentation 45
Field of activities 45
Technical Information 45
Safety Instructions (XA) 45

Registered trademarks 45

About this document

Graphic conventions

- Installation, explosion and electrical connection drawings are presented in simplified format
- Devices, assemblies, components and dimensional drawings are presented in reduced-line format
- Dimensional drawings are not to-scale representations; the dimensions indicated are rounded off to 2 decimal places

Symbols

Safety symbols

DANGER
This symbol alerts you to a dangerous situation. Failure to avoid this situation will result in serious or fatal injury.

WARNING
This symbol alerts you to a potentially dangerous situation. Failure to avoid this situation can result in serious or fatal injury.

CAUTION
This symbol alerts you to a potentially dangerous situation. Failure to avoid this situation can result in minor or medium injury.

NOTICE
This symbol alerts you to a potentially harmful situation. Failure to avoid this situation can result in damage to the product or something in its vicinity.

Electrical symbols

⊜ Protective earth (PE)
Ground terminals, which must be grounded prior to establishing any other connections. The ground terminals are located on the inside and outside of the device.

⏚ Ground connection
Grounded clamp, which is grounded via a grounding system.

Symbols for certain types of information

Symbol	Meaning
✓	**Permitted** Procedures, processes or actions that are permitted.
✓✓	**Preferred** Procedures, processes or actions that are preferred.
✗	**Forbidden** Procedures, processes or actions that are forbidden.
i	**Tip** Indicates additional information.
	Reference to documentation
	Reference to page
	Reference to graphic
	Visual inspection

Symbols in graphics

Symbol	Meaning
1, 2, 3 ...	Item numbers
1., 2., 3....	Series of steps
A, B, C, ...	Views

Symbol	Meaning
A-A, B-B, C-C, ...	Sections
EX	**Hazardous area** Indicates the hazardous area.
EX	**Safe area (non-hazardous area)** Indicates the non-hazardous area.

Documentation

The following document types are available in the Downloads area of the Endress+Hauser website (www.endress.com/downloads):

For an overview of the scope of the associated Technical Documentation, refer to the following:
- *Device Viewer* (www.endress.com/deviceviewer): Enter the serial number from the nameplate
- *Endress+Hauser Operations app*: Enter serial number from nameplate or scan matrix code on nameplate.

Brief Operating Instructions (KA)

Guide that takes you quickly to the 1st measured value
The Brief Operating Instructions contain all the essential information from incoming acceptance to initial commissioning.

Operating Instructions (BA)

Reference document
These Operating Instructions contain all the information that is required in the various life cycle phases of the device: from product identification, incoming acceptance and storage, to installation, connection, operation and commissioning, through to troubleshooting, maintenance and disposal.

Terms and abbreviations

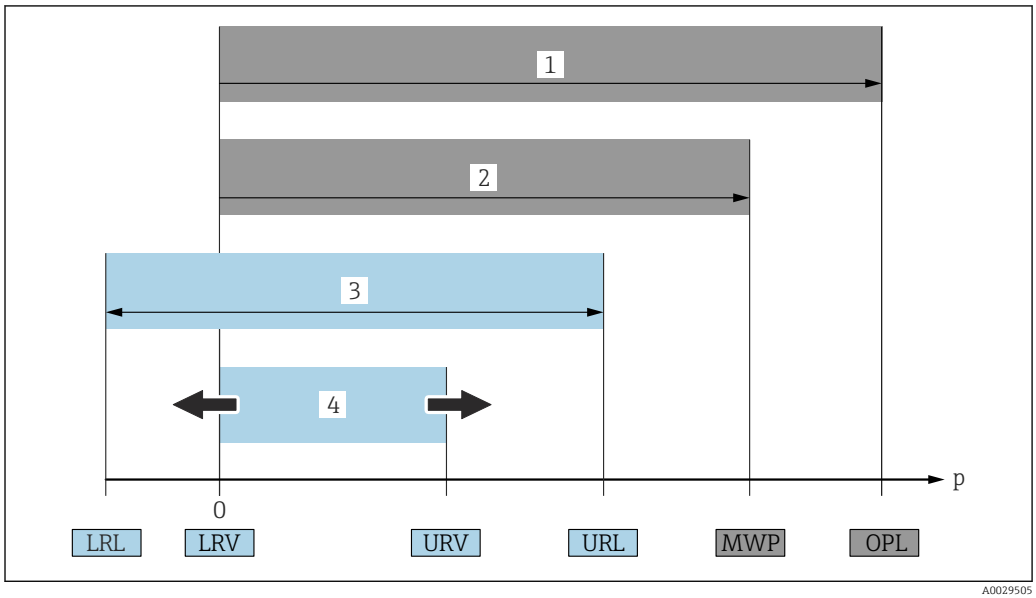

A0029505

1 *OPL: The OPL (over pressure limit = sensor overload limit) for the measuring device depends on the lowest-rated element, with regard to pressure, of the selected components, i.e. the process connection has to be taken into consideration in addition to the measuring cell. Observe pressure-temperature dependency. The OPL may only be applied for a short period of time.*
2 *MWP: The MWP (maximum working pressure) for the sensors depends on the lowest-rated element, with regard to pressure, of the selected components, i.e. the process connection has to be taken into consideration in addition to the measuring cell. Observe pressure-temperature dependency. The maximum working pressure may be applied at the device for an unlimited period. The MWP can be found on the nameplate.*
3 *The maximum sensor measuring range corresponds to the span between the LRL and URL. This sensor measuring range is equivalent to the maximum calibratable/adjustable span.*
4 *The calibrated/adjusted span corresponds to the span between the LRV and URV. Factory setting: 0 to URL. Other calibrated spans can be ordered as customized spans.*
p Pressure
LRL Lower range limit
URL Upper range limit
LRV Lower range value
URV Upper range value
TD Turn down. Example - see the following section.

Turn down calculation

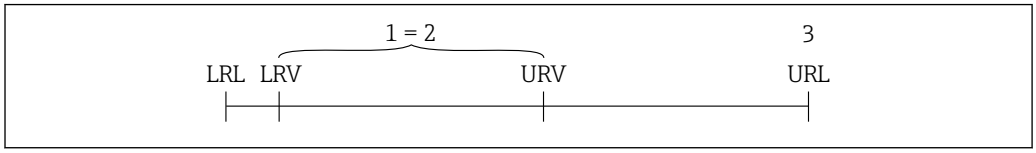

A0029545

1 *Calibrated/adjusted span*
2 *Zero point-based span*
3 *Upper range limit*

Example:
- Measuring cell: 10 bar (150 psi)
- Upper range limit (URL) = 10 bar (150 psi)
- Calibrated/adjusted span: 0 to 5 bar (0 to 75 psi)
- Lower range value (LRV) = 0 bar (0 psi)
- Upper range value (URV) = 5 bar (75 psi)

$$TD = \frac{URL}{|URV - LRV|}$$

In this example, the TD is 2:1. This span is based on the zero point.

Function and system design

Measuring principle - process pressure measurement

Devices with ceramic process membrane (Ceraphire®)

The ceramic sensor is an oil-free sensor, i.e. the process pressure acts directly on the robust ceramic process membrane and causes it to deflect. A pressure-dependent change in capacitance is measured at the electrodes of the ceramic substrate and the process membrane. The measuring range is determined by the thickness of the ceramic process membrane.

Advantages:
- Guaranteed overload resistance up to 40 times the nominal pressure
- Thanks to ultrapure 99.9 % ceramic (Ceraphire®, see also "www.endress.com/ceraphire")
  - Extremely high chemical durability
  - High mechanical durability
- Can be used in absolute vacuum
- Small measuring ranges

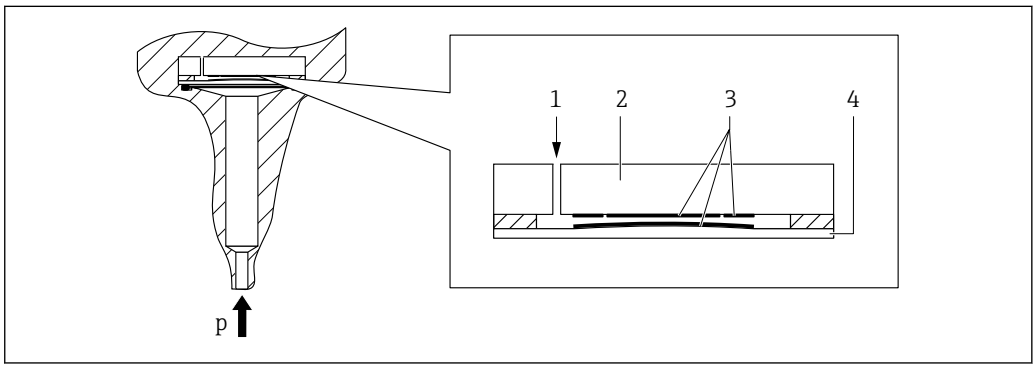

A0020465

1 Air pressure (relative pressure sensors)
2 Ceramic substrate
3 Electrodes
4 Ceramic process membrane

Devices with metallic process membrane

The process pressure deflects the metal process isolating diaphragm of the sensor and a fill fluid transfers the pressure to a Wheatstone bridge (semiconductor technology). The pressure-dependent change in the bridge output voltage is measured and evaluated.

Advantages:
- Can be used for high process pressures
- Fully welded sensor
- Slim, flush-mounted process connections available

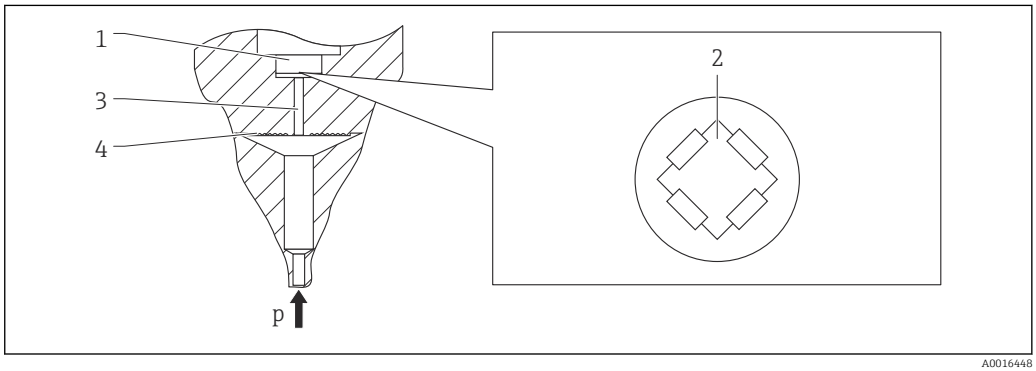

A0016448

1 Silicon measuring element, substrate
2 Wheatstone bridge
3 Channel with fill fluid
4 Metallic process membrane

Measuring system

A complete measuring system comprises:

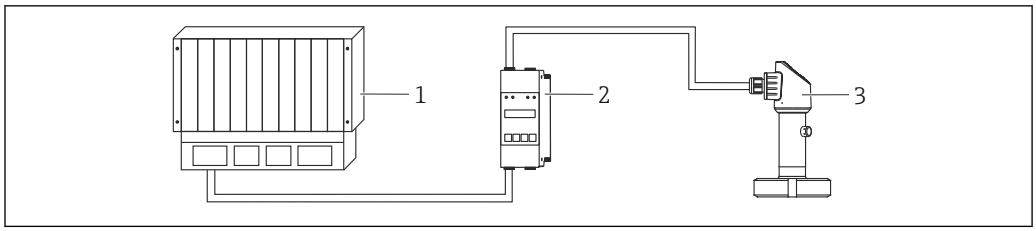

A0021924

1 PLC (programmable logic controller)
2 e.g. RMA42/RIA45 (if required)
3 Device

Device features

Field of application

Gauge pressure and absolute pressure

Process connections

PTC31B:
- Thread
- ANSI thread
- Thread M24 x 1.5
- JIS thread

PTP31B:
- Thread ISO 228, also flush mount
- Thread ASME
- DIN 13 thread
- Thread ASME
- JIS thread

Measuring ranges

- PTC31B: from 0 to +100 mbar (0 to +1.5 psi) to 0 to +40 bar (0 to +600 psi).
- PTP31B: from 0 to +400 mbar (0 to +6 psi) to 0 to +400 bar (0 to +5 800 psi).

OPL (depends on the measuring range)

- PTC31B: max. 0 to +60 bar (0 to +900 psi)
- PTP31B: max. −1 to +600 bar (−15 to +9 000 psi)

MWP

max. 1 to +400 bar (15 to +6 000 psi)

Process temperature range (temperature at process connection)

- PTC31B: −25 to +100 °C (−13 to +212 °F)
- PTP31B: −40 to +100 °C (−40 to +212 °F)

Ambient temperature range

−20 to +70 °C (−4 to +158 °F) (in the range of the temperature limits with restrictions in optical properties, such as display speed and contrast)

Reference accuracy

- Standard: up to 0.5 %
- Platinum: up to 0.3 %

Supply voltage

- Analog: 10 to 30 V_{DC}
- IO-Link: 10 to 30 V_{DC} on a direct current power unit

IO-Link communication is guaranteed only if the supply voltage is at least 18 V.

Output

Devices with IO-Link:
C/Q output for communication (SIO mode (switch output))

- 1 x PNP switch output (three-wire) (not with IO-Link)
- 2 x PNP switch output (four-wire), IO-Link
- 1 x PNP switch output + 4 to 20 mA output (four-wire), IO-Link

Material

PTC31B:
- Housing made of 316L (1.4404)
- Process connections made of 316L
- Process membrane made of Al_2O_3 aluminum-oxide ceramic, (Ceraphire®), ultrapure 99.9 %

PTP31B:
- Housing made of 316L (1.4404)
- Process connections made of 316L (1.4404)
- Process membrane made of 316L (1.4435)

Options

PTC31B:
- Calibration certificate
- Cleaned of oil and grease
- Min. setting Alarm current
- 3.1 Material certificates
- Cleaned for O_2 applications
- IO-Link

PTP31B:
- Calibration certificate
- Cleaned of oil and grease
- Min. setting Alarm current
- 3.1 Material certificates
- IO-Link

Overview of product design for analog communication version	Item	Description
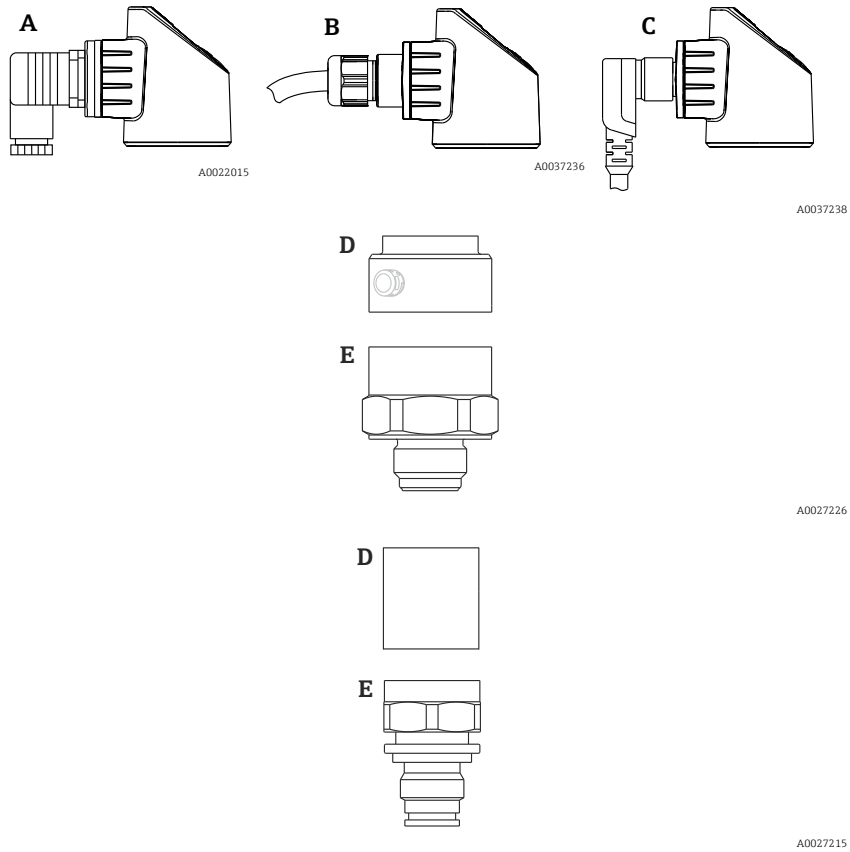	A	Valve plug
	B	Cable
	C	M12 plug Housing cap made of plastic
	D E	Housing Process connection (sample illustration)

Overview of product design for IO-Link communication version	Item	Description
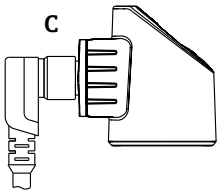 A0037238	C	M12 plug Housing cap made of plastic
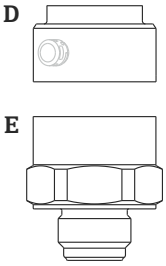 A0027226 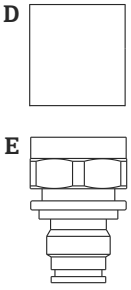 A0027215	D E	Housing Process connection (sample illustration)

System integration

The device can be given a tag name (max. 32 alphanumeric characters).

Name	Option [1]
Measuring point (TAG); see additional specifications	Z1

1) Product Configurator, order code for "Marking"

For devices with IO-Link, an IODD is available in the Downloads area of the Endress+Hauser website → 39.

Input

Measured variable

Measured process variable

Gauge pressure and absolute pressure

Calculated process variable

Pressure

Measuring range

Ceramic process membrane

Devices for gauge pressure measurement

Sensor	Device	Maximum sensor measuring range		Smallest calibratable span [1]	MWP	OPL	Factory settings [2]	Option [3]
		lower (LRL)	upper (URL)					
		[bar (psi)]	[bar (psi)]	[bar (psi)]	[bar (psi)]	[bar (psi)]		
100 mbar (1.5 psi) [4]	PTC31B	−0.1 to −1.5	+0.1 (+1.5)	0.02 (0.3)	2.7 (40.5)	4 (60)	0 to 100 mbar (0 to 1.5 psi)	1C
250 mbar (4 psi) [5]	PTC31B	−0.25 (−4)	+0.25 (+4)	0.05 (1)	3.3 (49.5)	5 (75)	0 to 250 mbar (0 to 4 psi)	1E
400 mbar (6 psi) [6]	PTC31B	−0.4 (−6)	+0.4 (+6)	0.08 (1.2)	5.3 (79.5)	8 (120)	0 to 400 mbar (0 to 6 psi)	1F
1 bar (15 psi) [6]	PTC31B	−1 (−15)	+1 (+15)	0.2 (3)	6.7 (100.5)	10 (150)	0 to 1 bar (0 to 15 psi)	1H
2 bar (30 psi) [6]	PTC31B	−1 (−15)	+2 (+30)	0.4 (6)	12 (180)	18 (270)	0 to 2 bar (0 to 30 psi)	1K
4 bar (60 psi) [6]	PTC31B	−1 (−15)	+4 (+60)	0.8 (12)	16.7 (250.5)	25 (375)	0 to 4 bar (0 to 60 psi)	1M
10 bar (150 psi) [6]	PTC31B	−1 (−15)	+10 (+150)	2 (30)	26.7 (400.5)	40 (600)	0 to 10 bar (0 to 150 psi)	1P
40 bar (600 psi) [6]	PTC31B	−1 (−15)	+40 (+600)	8 (120)	40 (600)	60 (900)	0 to 40 bar (0 to 600 psi)	1S

1) Highest turn down that can be set at the factory: 5:1. The turn down is preset and cannot be changed.
2) Other measuring ranges (e.g.−1 to +5 bar (−15 to 75 psi)) can be ordered with customer-specific settings (see the Product Configurator, order code for "Calibration; Unit" option "U"). It is possible to invert the output signal (LRV = 20 mA; URV = 4 mA). Prerequisite: URV < LRV
3) Product Configurator, order code for "Sensor range"
4) Vacuum resistance: 0.7 bar (10.5 psi) abs.
5) Vacuum resistance: 0.5 bar (7.5 psi) abs.
6) Vacuum resistance: 0 bar (0 psi) abs.

Devices for absolute pressure measurement

Sensor	Device	Maximum sensor measuring range		Smallest calibratable span [1]	MWP	OPL	Factory settings [2]	Option [3]
		lower (LRL)	upper (URL)					
		[bar (psi)]	[bar (psi)]	[bar (psi)]	[bar (psi)]	[bar (psi)]		
100 mbar (1.5 psi)	PTC31B	0	+0.1 (+1.5)	0.1 (1.5)	2.7 (40.5)	4 (60)	0 to 100 mbar (0 to 1.5 psi)	2C
250 mbar (4 psi)	PTC31B	0	+0.25 (+4)	0.25 (4)	3.3 (49.5)	5 (75)	0 to 250 mbar (0 to 4 psi)	2E
400 mbar (6 psi)	PTC31B	0	+0.4 (+6)	0.4 (6)	5.3 (79.5)	8 (120)	0 to 400 mbar (0 to 6 psi)	2F
1 bar (15 psi)	PTC31B	0	+1 (+15)	0.4 (6)	6.7 (100.5)	10 (150)	0 to 1 bar (0 to 15 psi)	2H
2 bar (30 psi)	PTC31B	0	+2 (+30)	0.4 (6)	12 (180)	18 (270)	0 to 2 bar (0 to 30 psi)	2K
4 bar (60 psi)	PTC31B	0	+4 (+60)	0.8 (12)	16.7 (250.5)	25 (375)	0 to 4 bar (0 to 60 psi)	2M
10 bar (150 psi)	PTC31B	0	+10 (+150)	2 (30)	26.7 (400.5)	40 (600)	0 to 10 bar (0 to 150 psi)	2P
40 bar (600 psi)	PTC31B	0	+40 (+600)	8 (120)	40 (600)	60 (900)	0 to 40 bar (0 to 600 psi)	2S

1) Highest turn down that can be set at the factory: 5:1. The turn down is preset and cannot be changed.
2) Other measuring ranges (e.g.−1 to +5 bar (−15 to 75 psi)) can be ordered with customer-specific settings (see the Product Configurator, order code for "Calibration; Unit" option "U"). It is possible to invert the output signal (LRV = 20 mA; URV = 4 mA). Prerequisite: URV < LRV
3) Product Configurator, order code for "Sensor range"

Maximum turn down which can be ordered for absolute pressure and gauge pressure sensors

Devices for gauge pressure measurement
- 6 bar (90 psi), 16 bar (240 psi), 25 bar (375 psi): TD 1:1 to TD 2.5:1
- All other measuring ranges: TD 1:1 to TD 5:1

Devices for absolute pressure measurement
- 100 mbar (1.5 psi), 250 mbar (4 psi), 400 mbar (6 psi): TD 1:1
- 1 bar (15 psi): TD 1:1 to TD 2.5:1
- All other measuring ranges: TD 1:1 to TD 5:1

Metallic process membrane

Devices with gauge pressure measurement

Sensor	Device	Maximum sensor measuring range		Smallest calibratable span [1]	MWP	OPL	Factory settings [2]	Option [3]
		lower (LRL)	upper (URL)					
		[bar (psi)]	[bar (psi)]	[bar (psi)]	[bar (psi)]	[bar (psi)]		
400 mbar (6 psi) [4]	PTP31B	−0.4 (−6)	+0.4 (+6)	0.4 (6)	1 (15)	1.6 (24)	0 to 400 mbar (0 to 6 psi)	1F
1 bar (15 psi) [4]	PTP31B	−1 (−15)	+1 (+15)	0.4 (6)	2.7 (40.5)	4 (60)	0 to 1 bar (0 to 15 psi)	1H
2 bar (30 psi) [4]	PTP31B	−1 (−15)	+2 (+30)	0.4 (6)	6.7 (100.5)	10 (150)	0 to 2 bar (0 to 30 psi)	1K
4 bar (60 psi) [4]	PTP31B	−1 (−15)	+4 (+60)	0.8 (12)	10.7 (160.5)	16 (240)	0 to 4 bar (0 to 60 psi)	1M
10 bar (150 psi) [4]	PTP31B	−1 (−15)	+10 (+150)	2 (30)	25 (375)	40 (600)	0 to 10 bar (0 to 150 psi)	1P
40 bar (600 psi) [4]	PTP31B	−1 (−15)	+40 (+600)	8 (120)	100 (1500)	160 (2400)	0 to 40 bar (0 to 600 psi)	1S
100 bar (1 500 psi) [4]	PTP31B	−1 (−15)	+100 (+1500)	20 (300)	100 (1500)	160 (2400)	0 to 100 bar (0 to 1 500 psi)	1U
400 bar (6 000 psi) [4]	PTP31B	−1 (−15)	+400 (+6000)	80 (1200)	400 (6000)	600 (9000)	0 to 400 bar (0 to 6 000 psi)	1W

1) Highest turn down that can be set at the factory: 5:1. The turn down is preset and cannot be changed.
2) Other measuring ranges (e.g.−1 to +5 bar (−15 to 75 psi)) can be ordered with customer-specific settings (see the Product Configurator, order code for "Calibration; Unit" option "U"). It is possible to invert the output signal (LRV = 20 mA; URV = 4 mA). Prerequisite: URV < LRV
3) Product Configurator, order code for "Sensor range"
4) Vacuum resistance: 0.01 bar (0.145 psi) abs.

Devices with absolute pressure measurement

Sensor	Device	Maximum sensor measuring range		Smallest calibratable span [1]	MWP	OPL	Factory settings [2]	Option [3]
		lower (LRL)	upper (URL)					
		[bar (psi)]	[bar (psi)]	[bar (psi)]	[bar (psi)]	[bar (psi)]		
400 mbar (6 psi)	PTP31B	0 (0)	0.4 (+6)	0.4 (6)	1 (15)	1.6 (24)	0 to 400 mbar (0 to 6 psi)	2F
1 bar (15 psi)	PTP31B	0 (0)	1 (+15)	0.4 (6)	2.7 (40.5)	4 (60)	0 to 1 bar (0 to 15 psi)	2H
2 bar (30 psi)	PTP31B	0 (0)	2 (+30)	0.4 (6)	6.7 (100.5)	10 (150)	0 to 2 bar (0 to 30 psi)	2K
4 bar (60 psi)	PTP31B	0 (0)	4 (+60)	0.8 (12)	10.7 (160.5)	16 (240)	0 to 4 bar (0 to 60 psi)	2M
10 bar (150 psi)	PTP31B	0 (0)	10 (+150)	2 (30)	25 (375)	40 (600)	0 to 10 bar (0 to 150 psi)	2P
40 bar (600 psi)	PTP31B	0 (0)	+40 (+600)	8 (120)	100 (1500)	160 (2400)	0 to 40 bar (0 to 600 psi)	2S
100 bar (1 500 psi)	PTP31B	0 (0)	+100 (+1500)	20 (300)	100 (1500)	160 (2400)	0 to 100 bar (0 to 1 500 psi)	2U
400 bar (6 000 psi)	PTP31B	0 (0)	+400 (+6000)	80 (1200)	400 (6000)	600 (9000)	0 to 400 bar (0 to 6 000 psi)	2W

1) Highest turn down that can be set at the factory: 5:1. The turn down is preset and cannot be changed.
2) Other measuring ranges (e.g.−1 to +5 bar (−15 to 75 psi)) can be ordered with customer-specific settings (see the Product Configurator, order code for "Calibration; Unit" option "U"). It is possible to invert the output signal (LRV = 20 mA; URV = 4 mA). Prerequisite: URV < LRV
3) Product Configurator, order code for "Sensor range"

Maximum turn down which can be ordered for absolute pressure and gauge pressure sensors

Ranges 0.5%/0.3%: TD 1:1 to TD 5:1

Output

Output signal

Description	Option [1]
PNP switch output + 4 to 20 mA output (4-wire) IO-Link (SSP Ed.2 V1.1)	A
2 x PNP switch output (4-wire) IO-Link (SSP Ed.2 V1.1)	B
PNP switch output (3-wire)	4
PNP switch output + 4 to 20 mA output (4-wire), IO-Link	7
2 x PNP switch output (4-wire), IO-Link	8

1) Product Configurator, order code for "Output"

Range of adjustment

- Switch output
  Switch point (SP): 0.5 to 100 % in increments of 0.1% (min. 1 mbar * (0.015 psi)) of the upper range limit (URL) switchback point (RSP): 0 to 99.5% in increments of 0.1% (min. 1 mbar * (0.015 psi)) of the upper range limit (URL)
  Minimum distance between SP and RSP: 0.5 % URL
- Analog output (if available)
  Lower range value (LRV) and upper range value (URV) can be set anywhere within the sensor range (LRL - URL). Turn down for analog output up to 5:1 of upper sensor limit (URL).
- Factory setting (if no customer-specific setting is ordered):
  Switch point SP1: 90 %; switchback point RP1: 10 %;
  Switch point SP2: 95 %; switchback point RP2: 15 %;
  Analog output: LRV 0 %; URV 100 %

* For measuring ranges with a negative gauge pressure up to 4 bar (60 psi), the increment when setting the switch point is min. 10 mbar (0.15 psi)

Relay switching capacity

- Switch state ON: $I_a \leq 250$ mA; switch state OFF: $I_a \leq 1$ mA
- Devices with IO-Link: Switch state ON [1]: $I_a \leq 200$ mA [2]; Switch state OFF: $I_a \leq 100$ µA
- Switch cycles: >10,000,000
- Voltage drop PNP: ≤2 V
- Overload protection: Automatic load testing of switching current;
  - Max. capacitance load: 14 µF at max. supply voltage (without resistive load)
  - Devices with IO-Link: Max. capacitance load: 1 µF at max. supply voltage (without resistive load)
  - Max. cycle duration: 0.5 s; min. t_{on}: 4 ms
  - Max. cycle duration: 0.5 s; min. t_{on}: 40 µs
  - Periodic disconnection from protective circuit in the event of overcurrent (f = 2 Hz) and "F804" displayed

Signal range 4 to 20 mA

3.8 to 20.5 mA

Load (for devices with analog output)

In order to guarantee sufficient terminal voltage, a maximum load resistance R_L (including line resistance) must not be exceeded depending on the supply voltage U_B of the supply unit.

The maximum load resistance depends on the terminal voltage and is calculated according to the following formula:

1) For switch outputs "2 x PNP" and "1 x PNP + 4 to 20 mA output", 100 mA can be guaranteed over the entire temperature range. For lower ambient temperatures, higher currents are possible but cannot be guaranteed. Typical value at 20 °C (68 °F) approx. 200 mA. For switch output "1 x PNP", 200 mA can be guaranteed over the entire temperature range.
2) Deviating from the IO-Link standard, larger currents are supported.

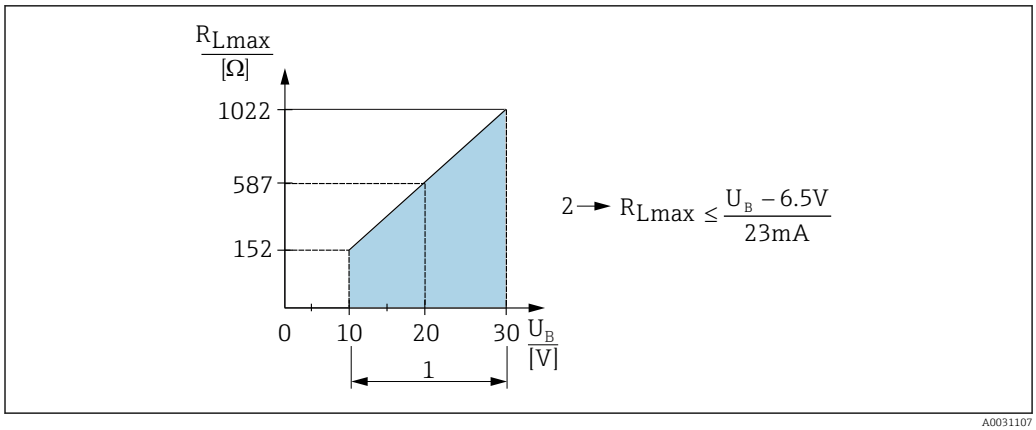

1 Power supply 10 to 30 V DC
2 R_{Lmax} maximum load resistance
U_B Supply voltage

If load is too great:
- failure current is output and "S803" displayed (output: MIN alarm current)
- Periodic checking to establish if it is possible to quit fault state
- In order to guarantee sufficient terminal voltage, a maximum load resistance RL (including line resistance) must not be exceeded depending on the supply voltage UB of the supply unit.

Signal on alarm 4 to 20 mA

The response of the output to error is regulated in accordance with NAMUR NE 43.

The behavior of the current output in the event of errors is defined in the following parameters:
- Alarm Current FCU "MIN": Lower alarm current (≤3.6 mA) (optional, see the following table)
- Alarm Current FCU "MAX" (factory setting): Upper alarm current (≥21 mA)
- Alarm Current FCU "HLD" (HOLD) (optional, see the following table): Last measured current value is held. When the device starts, the current output is set to "Lower alarm current" (≤3.6 mA).

Alarm current

Name	Option
Min. alarm current set	IA [1)]
1 low ≤3.6 mA 2 high ≥21 mA 3 last current value	U [2)]

1) Product Configurator, order code for "Service"
2) Product Configurator order code for "Calibration/unit"

Dead time, time constant

Presentation of the dead time and the time constant:

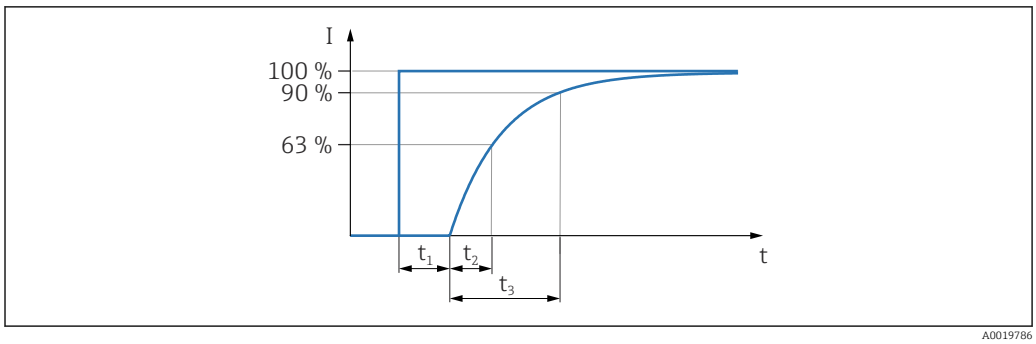

Dynamic behavior

Analog electronics

Dead time (t_1) [ms]	Time constant (T63), t_2 [ms]	Time constant (T90), t_3 [ms]
7 ms	11 ms	16 ms

Dynamic behavior of switch output

PNP switch output and 2 x PNP switch output: response time ≤20 ms

Damping

Once the supply voltage has been applied, damping for the first measured value is at 0, i.e. the first measured value present always corresponds to the actual measured value (regardless of damping).

A damping affects all outputs (output signal, display):
- Via local display infinitely variable 0 to 999.9 s
- Factory setting: 2.0 s

Power supply

WARNING

Reduced electrical safety due to incorrect connection!

- A suitable circuit breaker must be provided for the device in accordance with IEC/EN 61010.
- Protective circuits against reverse polarity, HF influences and overvoltage peaks are installed.
- **Non-hazardous area:** To meet device safety specifications according to the IEC/EN61010 standard, the installation must ensure that the maximum current is limited to 630 mA.
- **Hazardous area:** The maximum current is restricted to Ii = 100 mA by the transmitter power supply unit when the measuring instrument is used in an intrinsically safe circuit (Ex ia).

Terminal assignment

NOTICE

Damage to analog input of PLC resulting from incorrect connection

- Do not connect the active PNP switch output of the device to the 4 to 20 mA input of a PLC.

1 x PNP switch output R1 (not with IO-Link functionality)

M12 plug	Valve plug	Cables
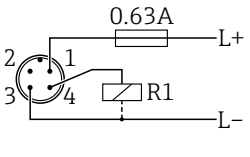	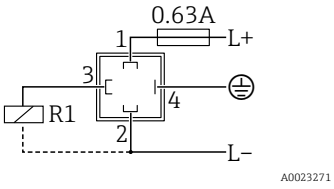	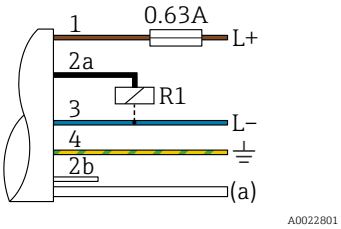 *1 brown = L+* *2a black = switch output 1* *2b white = not used* *3 blue = L-* *4 green/yellow = ground* *(a) reference air hose*

2 x PNP switch output R1 and R2

M12 plug	Valve plug	Cables
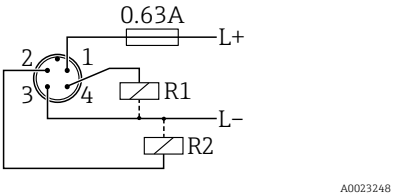	-	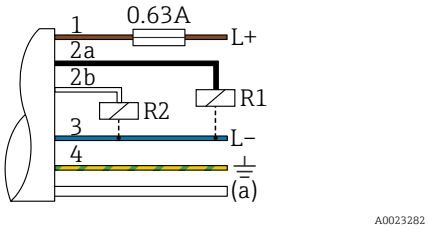 *1 brown = L+* *2a black = switch output 1* *2b white = switch output 2* *3 blue = L-* *4 green/yellow = ground* *(a) reference air hose*

IO-Link: 2 x PNP switch output R1 and R2

M12 plug
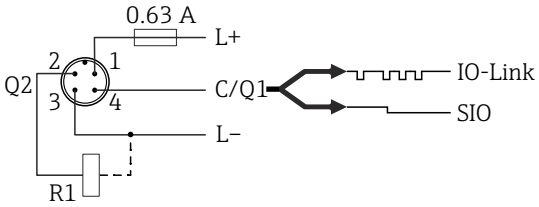

1 x PNP switch output R1 with additional analog output 4 to 20 mA (active)

M12 plug	Valve plug	Cables
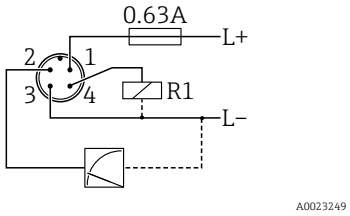	-	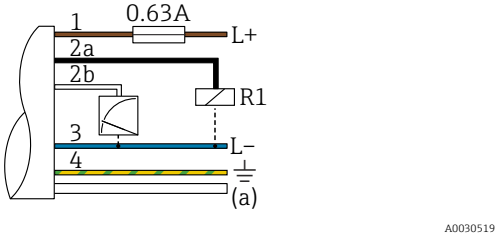 *1 brown = L+* *2a black = switch output 1* *2b white = analog output 4 to 20 mA* *3 blue = L-* *4 green/yellow = ground* *(a) reference air hose*

IO-Link: 1 x PNP switch output R1 with additional analog output 4 to 20 mA (active)

M12 plug
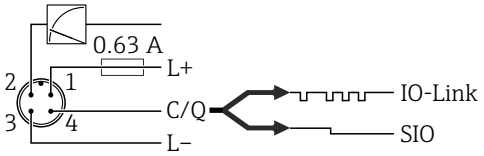

Supply voltage

Supply voltage: 10 to 30 V DC at a DC power unit

Supply voltage IO-Link: 10 to 30 V DC at a DC power unit

IO-Link communication is guaranteed only if the supply voltage is at least 18 V.

Current consumption and alarm signal

Intrinsic power consumption	Alarm current (for devices with analog output) [1]
≤ 60 mA	≥21 mA (factory setting)

1) Setting min. alarm current ≤3.6mA can be ordered via the product order structure. Min. alarm current ≤3.6mA can be configured at the device or via IO-Link.

Power supply fault

- Behavior in the event of overvoltage (>30 V):
  The device works continuously up to 34 V DC without damage. If the supply voltage is exceeded, the specified characteristics are no longer guaranteed.
- Behavior in the event of undervoltage:
  If the supply voltage falls below the minimum value, the device switches off in a defined manner.

Electrical connection

Degree of protection

Communication version	Connector	Degree of protection	Option [1]
Analog	Cable 5 m (16 ft)	IP66/67 NEMA Type 4X enclosure	D
	Cable 10 m (33 ft)	IP66/67 NEMA Type 4X enclosure	E
	Cable 25 m (82 ft)	IP66/67 NEMA Type 4X enclosure	F
	Valve plug ISO4400 M16	IP65 NEMA Type 4X enclosure	U

Communication version	Connector	Degree of protection	Option [1]
	Valve plug ISO4400 NPT ½	IP65 NEMA Type 4X enclosure	V
Analog, IO-Link	M12 plug	IP65/67 NEMA Type 4X enclosure	M

1) Product Configurator, order code for "Electrical connection"

Cable specification (analog)

For valve plug: < 1.5 mm^2 (16 AWG) and Ø 4.5 to 10 mm (0.18 to 0.39 in)

Residual ripple

The device operates within the reference accuracy up to ±5 % of the residual ripple of the supply voltage, within the permitted voltage range.

Influence of power supply

≤0.005 % of URV/1 V

Overvoltage protection

The device does not contain any special elements to protect against overvoltage ("wire to ground"). Nevertheless the requirements of the applicable EMC standard EN 61000-4-5 (testing voltage 1kV EMC wire/ground) are met.

Performance characteristics of the ceramic process membrane

Reference conditions

- As per IEC 60770
- Ambient temperature T_A = constant, in the range of: +21 to +33 °C (+70 to +91 °F)
- Humidity φ = constant, in the range of 5 to 80 % rH
- Atmospheric pressure p_A = constant, in the range of: 860 to 1 060 mbar (12.47 to 15.37 psi)
- Position of the measuring cell = constant, in the range of: horizontal ±1° (see also "Influence of orientation" section)
- Zero based span
- Material of process membrane: Al_2O_3 (aluminum-oxide ceramic, Ceraphire®)
- Supply voltage: 24 V DC ±3 V DC
- Load: 320 Ω (at 4 to 20 mA output)

Uncertainty of measurement for small absolute pressure ranges

The smallest extended uncertainty of measurement that can be delivered by our standards is

- in the range of 1 to 30 mbar (0.0145 to 0.435 psi): 0.4 % of reading
- in the range of < 1 mbar (0.0145 psi): 1 % of reading.

Influence of orientation

→ 📄 22

Resolution

Current output: min. 1.6 µA

Display: can be set (factory setting: presentation of the maximum accuracy of the transmitter)

Reference accuracy

The reference accuracy includes the non-linearity [DIN EN 61298-2 3.11] including the pressure hysteresis [DIN EN 61298-23.13] and non-repeatability [DIN EN 61298-2 3.11] in accordance with the limit point method as per [DIN EN 60770].

Device	% of the calibrated span to the maximum turn down		
	Reference accuracy	Non-linearity [1]	Non-repeatability
PTC31B - standard	±0.5	±0.1	±0.1
PTC31B - platinum	±0.3	±0.1	±0.1

1) The non-linearity for the 40 bar (600 psi) sensor can be up to ± 0.15% of the calibrated span up to the maximum turn down.

Overview of the turn down ranges → 📄 12

Ordering information

Name	Option [1]
Platinum (on request)	D
Standard	G

1) Product Configurator, order code for "Reference accuracy"

Thermal change of the zero output and the output span

Measuring cell	−20 to +85 °C (−4 to +185 °F)	−40 to −20 °C (−40 to −4 °F) +85 to +100 °C (+185 to +212 °F)
	% of the URL for TD 1:1	
<1 bar (15 psi)	<1	<1.2
≥1 bar (15 psi)	<0.8	<1

Long-term stability

1 year	5 years	8 years
% of the URL		
±0.2	±0.4	Under development

Switch-on time	≤2 s For small measuring ranges, pay attention to the thermal compensation effects.

Performance characteristics of metallic process membrane

Reference conditions

- As per IEC 60770
- Ambient temperature T_A = constant, in the range of: +21 to +33 °C (+70 to +91 °F)
- Humidity φ = constant, in the range of: 5 to 80 % rH
- Atmospheric pressure p_A = constant, in the range of: 860 to 1060 mbar (12.47 to 15.37 psi)
- Position of the measuring cell = constant, in the range of: horizontal ±1° (see also "Influence of orientation" section)
- Zero based span
- Process membrane material: AISI 316L (1.4435)
- Filling oil: synthetic oil polyalphaolefin FDA 21 CFR 178.3620, NSF H1
- Supply voltage: 24 V DC ±3 V DC
- Load: 320 Ω (at 4 to 20 mA output)

Uncertainty of measurement for small absolute pressure ranges

The smallest extended uncertainty of measurement that can be delivered by our standards is

- in the range of 1 to 30 mbar (0.0145 to 0.435 psi): 0.4 % of reading
- in the range of < 1 mbar (0.0145 psi): 1 % of reading.

Influence of orientation

→ 🗎 22

Resolution

Current output: min. 1.6 µA

Display: can be set (factory setting: presentation of the maximum accuracy of the transmitter)

Reference accuracy

The reference accuracy includes the non-linearity [DIN EN 61298-2 3.11] including the pressure hysteresis [DIN EN 61298-23.13] and non-repeatability [DIN EN 61298-2 3.11] in accordance with the limit point method as per [DIN EN 60770].

Device	% of the calibrated span to the maximum turn down		
	Reference accuracy	Non-linearity	Non-repeatability
PTP31B - standard	±0.5	±0.1	±0.1
PTP31B - platinum	±0.3	±0.1	±0.1

Overview of the turn down ranges → 🗎 12

Ordering information

Name	Option [1]
Platinum (on request)	D
Standard	G

1) Product Configurator, order code for "Reference accuracy"

Thermal change of the zero output and the output span

Measuring cell	−20 to +85 °C (−4 to +185 °F)	−40 to −20 °C (−40 to −4 °F) +85 to +100 °C (+185 to +212 °F)
	% of the calibrated span for TD 1:1	
<1 bar (15 psi)	<1	<1.2
≥1 bar (15 psi)	<0.8	<1

Long-term stability

1 year	5 years	8 years
% of the URL		
±0.2	±0.4	Under development

Switch-on time

≤2 s

The following applies to IO-Link: For small measuring ranges, pay attention to the thermal compensation effects.

Mounting

Installation conditions

- Moisture must not penetrate the housing when mounting the device, establishing the electrical connection and during operation.
- Point the cable and connector downwards where possible to prevent moisture from entering (e.g. rain or condensation water).

Influence of orientation

Any orientation is possible. However, the orientation may cause a zero point shift, i.e. the measured value does not show zero when the vessel is empty or partially full.

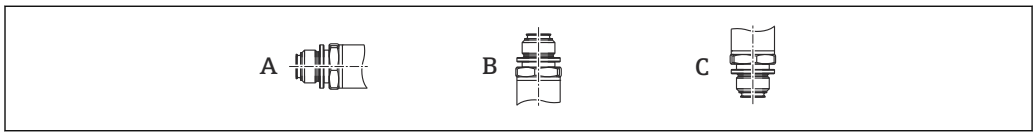

A0024708

PTP31B

Process membrane axis is horizontal (A)	Process membrane pointing upwards (B)	Process membrane pointing downwards (C)
Calibration position, no effect	Up to +4 mbar (+0.058 psi)	Up to −4 mbar (−0.058 psi)

PTC31B

Type	Process membrane axis is horizontal (A)	Process membrane pointing upwards (B)	Process membrane pointing downwards (C)
< 1 bar (15 psi)	Calibration position, no effect	Up to +0.3 mbar (+0.0044 psi)	Up to −0.3 mbar (−0.0044 psi)
≥ 1 bar (15 psi)	Calibration position, no effect	Up to +3 mbar (+0.0435 psi)	Up to −3 mbar (−0.0435 psi)

A position-dependent zero point shift can be corrected on the device.

Mounting location

Pressure measurement

Pressure measurement in gases

Mount the device with shutoff device above the tapping point so that any condensate can flow into the process.

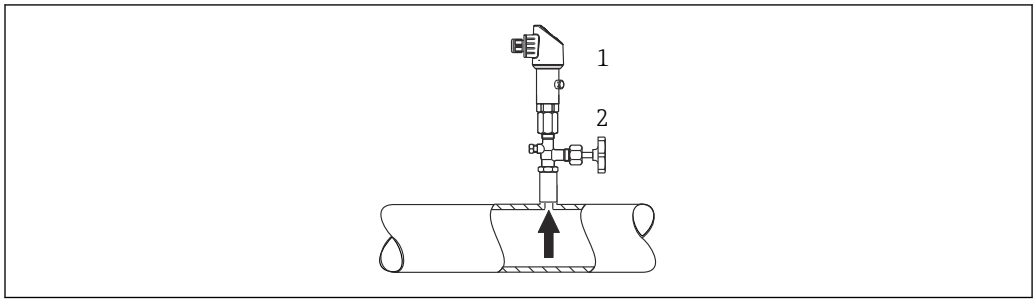

A0025920

1 Device
2 Shutoff device

Pressure measurement in vapors

For pressure measurement in vapors, use a siphon. The siphon reduces the temperature to almost ambient temperature. Preferably mount the device with the shutoff device and siphon below the tapping point.

Advantage:
- defined water column causes only minor/negligible measuring errors and
- only minor/negligible heat effects on the device.

Mounting above the tapping point is also permitted.

Note the max. permitted ambient temperature of the transmitter!

Take the influence of the hydrostatic water column into consideration.

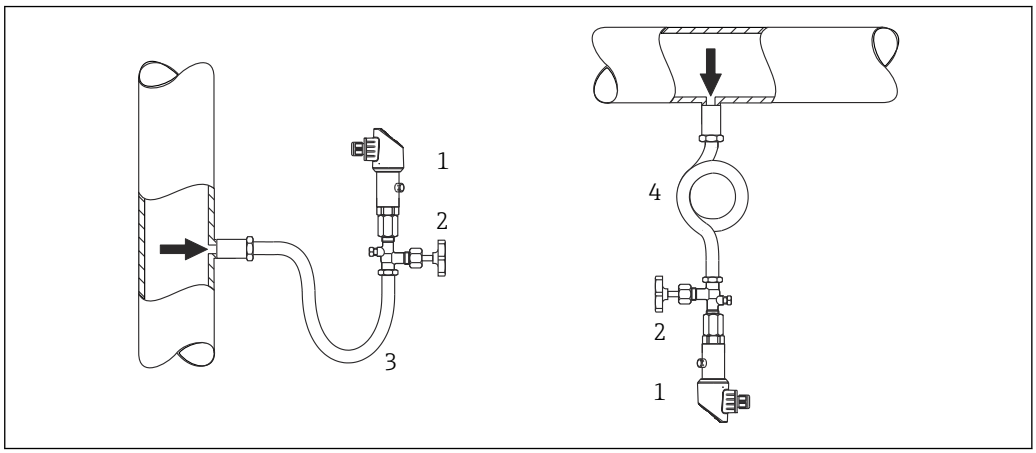

A0025921

1 Device
2 Shutoff device
3 Siphon
4 Siphon

Pressure measurement in liquids

Mount the device with a shutoff device and siphon below or at the same height as the tapping point.

Advantage:
- defined water column causes only minor/negligible measuring errors and
- air bubbles can be released to the process.

Take the influence of the hydrostatic water column into consideration.

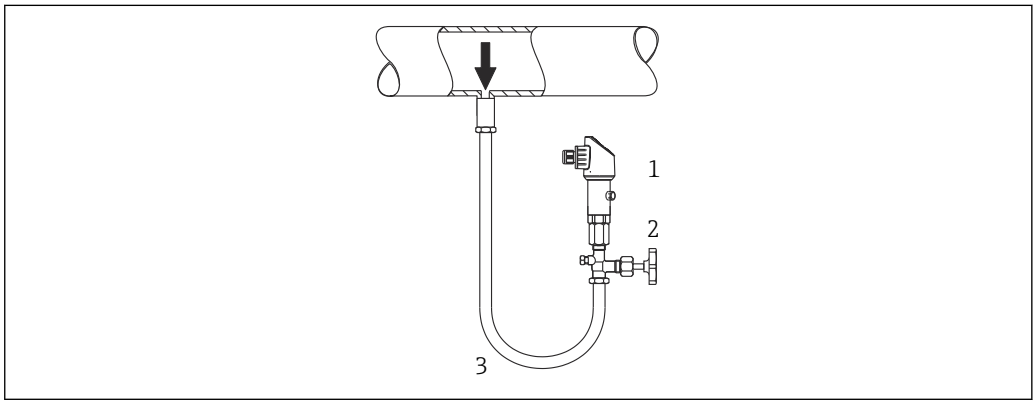

A0025922

1 Device
2 Shutoff device
3 Siphon

Level measurement

- Always install the device below the lowest measuring point.
- Do not install the device at the following positions:
  - in the filling curtain
  - in the tank outlet
  - in the suction area of a pump
  - at a point in the tank which could be affected by pressure pulses from the agitator.
- A functional test can be carried out more easily if you mount the device downstream from a shutoff device.

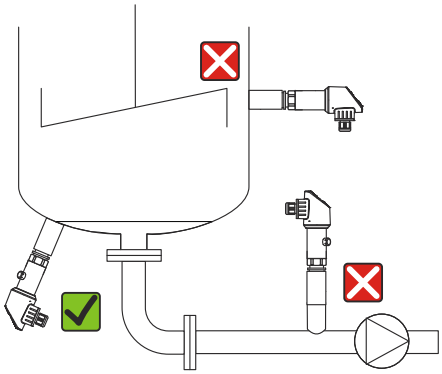

A0025923

Mounting instructions for oxygen applications

Oxygen and other gases can react explosively to oils, grease and plastics, such that, among other things, the following precautions must be taken:
- All components of the system, such as measuring devices, must be cleaned in accordance with the BAM requirements.
- Depending on the materials used, a certain maximum temperature and a maximum pressure must not be exceeded for oxygen applications.
- The following table lists devices (devices only, not accessories or enclosed accessories), which are suitable for gaseous oxygen applications.

PTC31B

p_{max} for oxygen applications	T_{max} for oxygen applications	Option [1]
40 bar (600 psi)	−10 to +60 °C (+14 to +140 °F)	HB

1) Product Configurator, order code for "Service"

Environment

Ambient temperature range

Ambient temperature range [3)]
- −20 to +70 °C (−4 to +158 °F)
- IO-Link: −20 to +70 °C (−4 to +158 °F)
  (in the range of the temperature limits with restrictions in optical properties, such as display speed and contrast)

Storage temperature range

−40 to +85 °C (−40 to +185 °F)

Climate class

Climate class	Note
Class 3K5	Air temperature: −5 to +45 °C (+23 to +113 °F), relative humidity: 4 to 95 % satisfied according to IEC 721-3-3 (condensation not possible)

Degree of protection

Communication version	Connector	Degree of protection	Option [1)]
Analog	Cable 5 m (16 ft)	IP66/67 NEMA Type 4X enclosure	D
	Cable 10 m (33 ft)	IP66/67 NEMA Type 4X enclosure	E
	Cable 25 m (82 ft)	IP66/67 NEMA Type 4X enclosure	F
	Valve plug ISO4400 M16	IP65 NEMA Type 4X enclosure	U
	Valve plug ISO4400 NPT ½	IP65 NEMA Type 4X enclosure	V
Analog, IO-Link	M12 plug	IP65/67 NEMA Type 4X enclosure	M

1) Product Configurator, order code for "Electrical connection"

Vibration resistance

Test standard	Vibration resistance
IEC 60068-2-64:2008	Guaranteed for 5 to 2000Hz: 0.05g^2/Hz

Electromagnetic compatibility

- Interference emission as per EN 61326-1 equipment B
- Interference immunity as per EN 61326-1 (industrial environment)
- Devices with IO-Link: For intended use, the switch output can switch to the communication mode for 0.2 s in the event of transient faults.
- NAMUR recommendation EMC (NE 21) (not for devices with IO-Link)
- Maximum deviation: 1.5% with TD 1:1

For more details, please refer to the Declaration of Conformity.

3) Exception: the following cable is designed for an ambient temperature range of −25 to +70 °C (−13 to +158 °F): Product Configurator, order code for "Accessory enclosed" option "RZ".

Process

Process temperature range for devices with ceramic process membrane

−25 to +100 °C (−13 to +212 °F)

- For saturated steam applications, use a device with a metallic process membrane, or provide a siphon for temperature isolation when installing.
- Observe the process temperature range of the seal. See also the following table.

Seal	Notes	Process temperature range	Option
FKM	-	−20 to +100 °C (−4 to +212 °F)	A [1]
FKM	Cleaned for O_2 application	−10 to +60 °C (+14 to +140 °F)	A [1] and HB [2]
EPDM 70	-	−25 to +100 °C (−13 to +212 °F)	J [1]

1) Product Configurator, order code for "Seal"
2) Product Configurator, order code for "Service"

Applications with jumps in temperature

Frequent extreme changes in temperatures can temporarily cause measuring errors. Temperature compensation occurs after a few minutes. Internal temperature compensation occurs more quickly the smaller the change in temperature and the longer the time interval involved.

For further information please contact your local Endress+Hauser Sales Center.

Process temperature range for devices with metallic process membrane

−40 to +100 °C (−40 to +212 °F)

Applications with jumps in temperature

Frequent extreme changes in temperatures can temporarily cause measuring errors. Internal temperature compensation occurs more quickly the smaller the change in temperature and the longer the time interval involved.

For further information please contact your local Endress+Hauser Sales Center.

Pressure specifications

WARNING

The maximum pressure for the measuring device depends on the lowest-rated element with regard to pressure.

- ▶ For pressure specifications, see the "Measuring range" section and the "Mechanical construction" section.
- ▶ The Pressure Equipment Directive (2014/68/EU) uses the abbreviation "PS". The abbreviation "PS" corresponds to the MWP (maximum working pressure) of the measuring device.
- ▶ MWP (maximum working pressure): The MWP (maximum working pressure) is specified on the nameplate. This value is based on a reference temperature of +20 °C (+68 °F) and may be applied to the device for an unlimited period of time. Observe the temperature dependency of the MWP.
- ▶ OPL (over pressure limit): The test pressure corresponds to the over pressure limit of the sensor and may only be applied temporarily to ensure that the measurement is within the specifications and no permanent damage develops. In the case of sensor range and process connections where the over pressure limit (OPL) of the process connection is smaller than the nominal value of the sensor, the device is set at the factory, at the very maximum, to the OPL value of the process connection. If you want to use the entire sensor range, select a process connection with a higher OPL value.
- ▶ Devices with ceramic process isolating diaphragm: avoid steam hammering! Steam hammering can cause zero point drifts. Recommendation: Residue (water droplets or condensation) may remain on the process isolating diaphragm following CIP cleaning and can result in local steam hammering the next time steam cleaning takes place. In practice, drying the process isolating diaphragm (e.g. by blowing) has proved to prevent steam hammering.

Mechanical construction

The following dimensions are rounded values. As a result, there may be deviations from the specifications in the Product Configurator at www.endress.com.

Design, dimensions

Device height

The device height is calculated from
- the height of the electrical connection
- the height of the housing and
- the height of the individual process connection.

The individual heights of the components are listed in the following sections. To calculate the device height simply add up the individual heights of the components. Where applicable also take into consideration the installation distance (space that is used to install the device). You can use the following table for this purpose:

Section	Page	Height	Example
Electrical connection	→ 📄 27	(A)	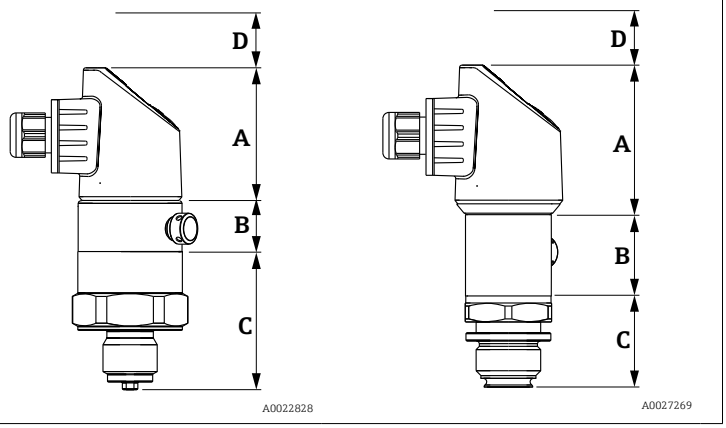
Housing height	→ 📄 28	(B)	
Process connection height	→ 📄 29 → 📄 32	(C)	
Installation distance	-	(D)	

Electrical connection

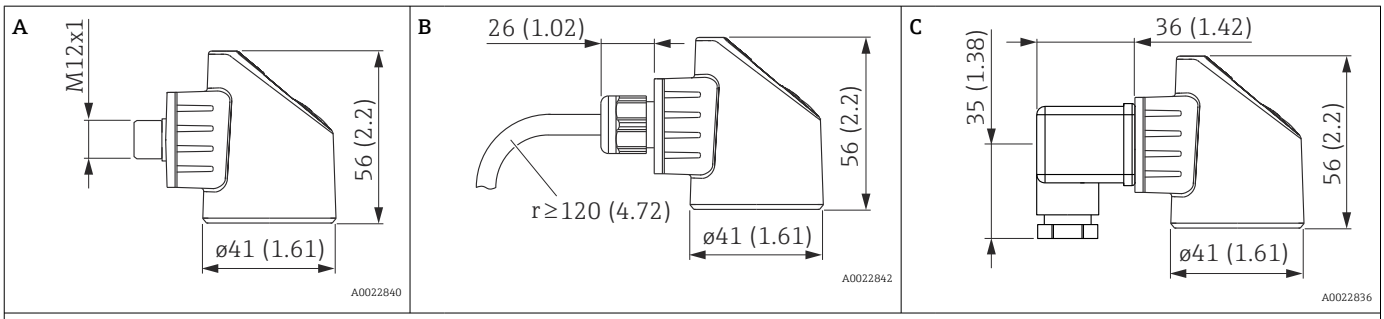

Engineering unit mm (in)

Item	Designation	Material	Weight kg (lbs)	Option [1]
A	M12 plug IP65/67 (Additional dimensions → 📄 44)	Housing cap made of plastic	0.012 (0.03)	M Plug connector with cable can be ordered as an accessory → 📄 44
B	Cable 5 m (16 ft)	PUR (UL94V0)	0.280 (0.62)	D
B	Cable 10 m (33 ft)	PUR (UL94V0)	0.570 (1.26)	E
B	Cable 25 m (82 ft)	PUR (UL94V0)	1.400 (3.09)	F
C	M16 valve plug	Plastic PPSU	0.060 (0.14)	U
C	NPT ½ valve plug	Plastic PPSU	0.060 (0.14)	V

1) Product Configurator, order code for "Electrical connection"

Housing

A

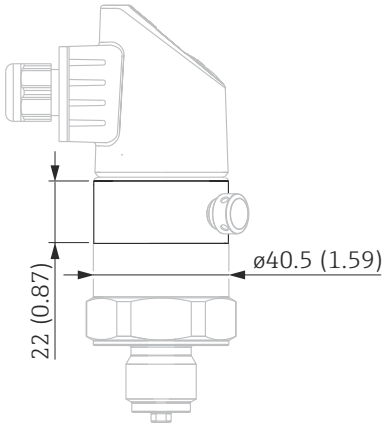

Engineering unit mm (in)

B

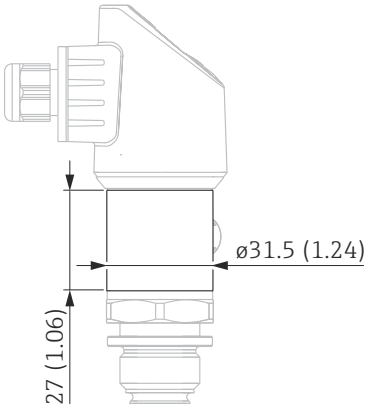

Engineering unit mm (in)

Position	Device	Material	Weight kg (lbs)
A	PTC31B	Stainless steel 316L	0.150 (0.33)
B (up to 100 bar (1 500 psi))	PTP31B	Stainless steel 316L	0.090 (0.20)

Process connections with internal, ceramic process membrane

Thread ISO 228 G

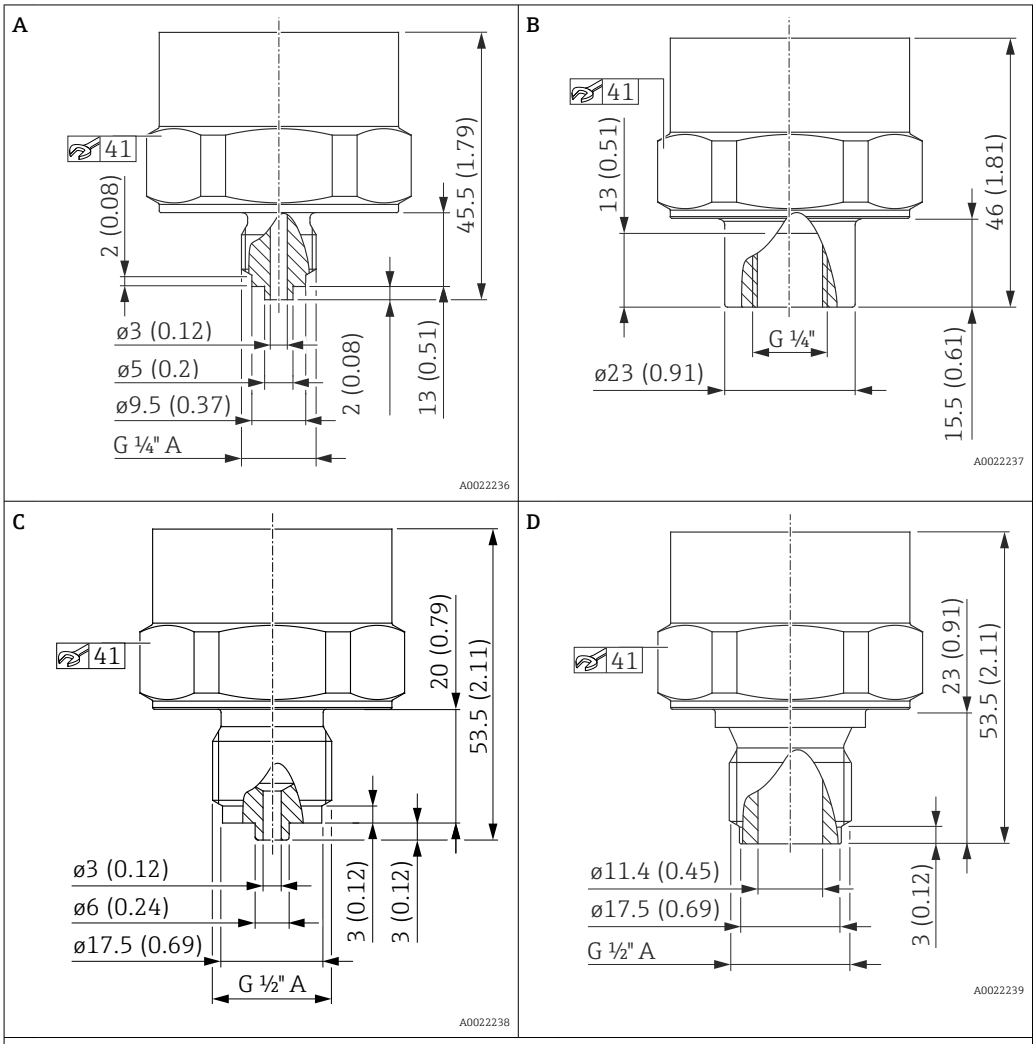

Engineering unit mm (in)

Device	Position	Designation	Material	Weight	Option [1]
				kg (lbs)	
PTC31B	A	Thread ISO 228 G ¼" A, EN 837	316L	0.160 (0.35)	WTJ
PTC31B	B	Thread ISO 228 G ¼" (female)	316L	0.180 (0.40)	WAJ
PTC31B	C	Thread ISO 228 G ½" A, EN 837	316L	0.180 (0.40)	WBJ
PTC31B	D	Thread ISO 228 G ½" A, bore11.4 mm (0.45 in)	316L	0.180 (0.40)	WWJ

1) Product Configurator, order code for "Process connection"

Process connections with internal, ceramic process membrane

Thread ASME

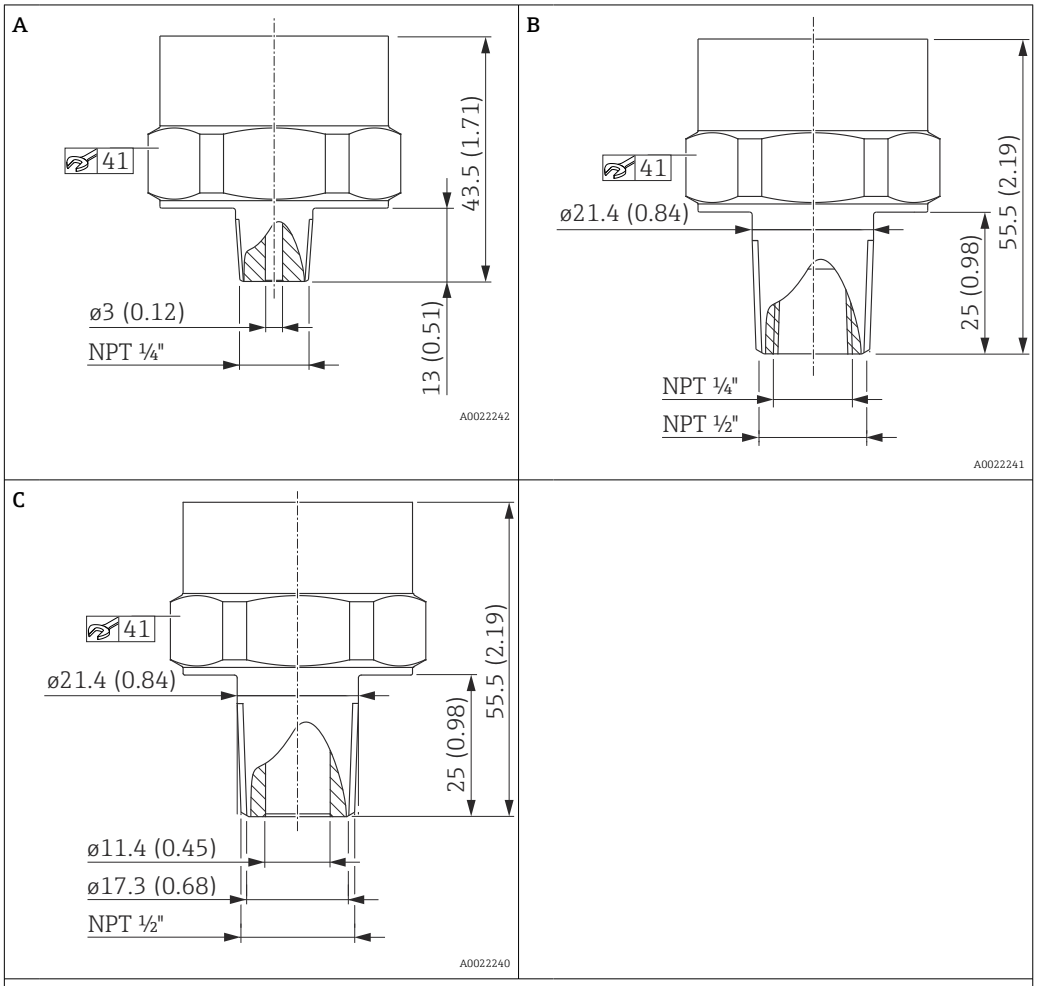

Engineering unit mm (in)

Device	Item	Designation	Material	Weight	Approval	Option [1]
				kg (lbs)		
PTC31B	A	ASME ¼" MNPT, bore 3 mm (0.12 in)	316L	0.160 (0.35)	CRN	VUJ
PTC31B	B	ASME ½" MNPT, ¼" FNPT (female)	316L	0.190 (0.42)	CRN	VXJ
PTC31B	C	ASME ½" MNPT, bore 11.4 mm (0.45 in)	316L	0.190 (0.42)	CRN	VWJ

1) Product Configurator, order code for "Process connection"

Process connections with internal, ceramic process membrane

Thread DIN13

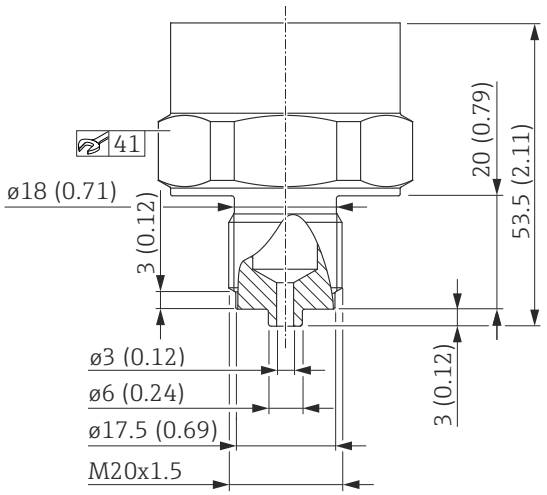

Engineering unit mm (in)

Device	Designation	Material	Weight	Option [1]
			kg (lbs)	
PTC31B	DIN 13 M20 x 1.5, EN 837, bore 3 mm (0.12 in)	316L	0.180 (0.40)	X4J

1) Product Configurator, order code for "Process connection"

Process connections with internal, ceramic process membrane

Thread JIS B0203

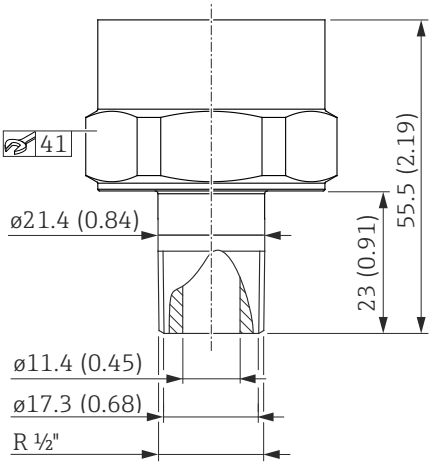

Engineering unit mm (in)

Device	Designation	Material	Weight	Option [1]
			kg (lbs)	
PTC31B	JIS B0203 R 1/2 (male)	316L	0.180 (0.40)	ZJJ

1) Product Configurator, order code for "Process connection"

Process connections with internal, metallic process membrane

Thread ISO 228 G

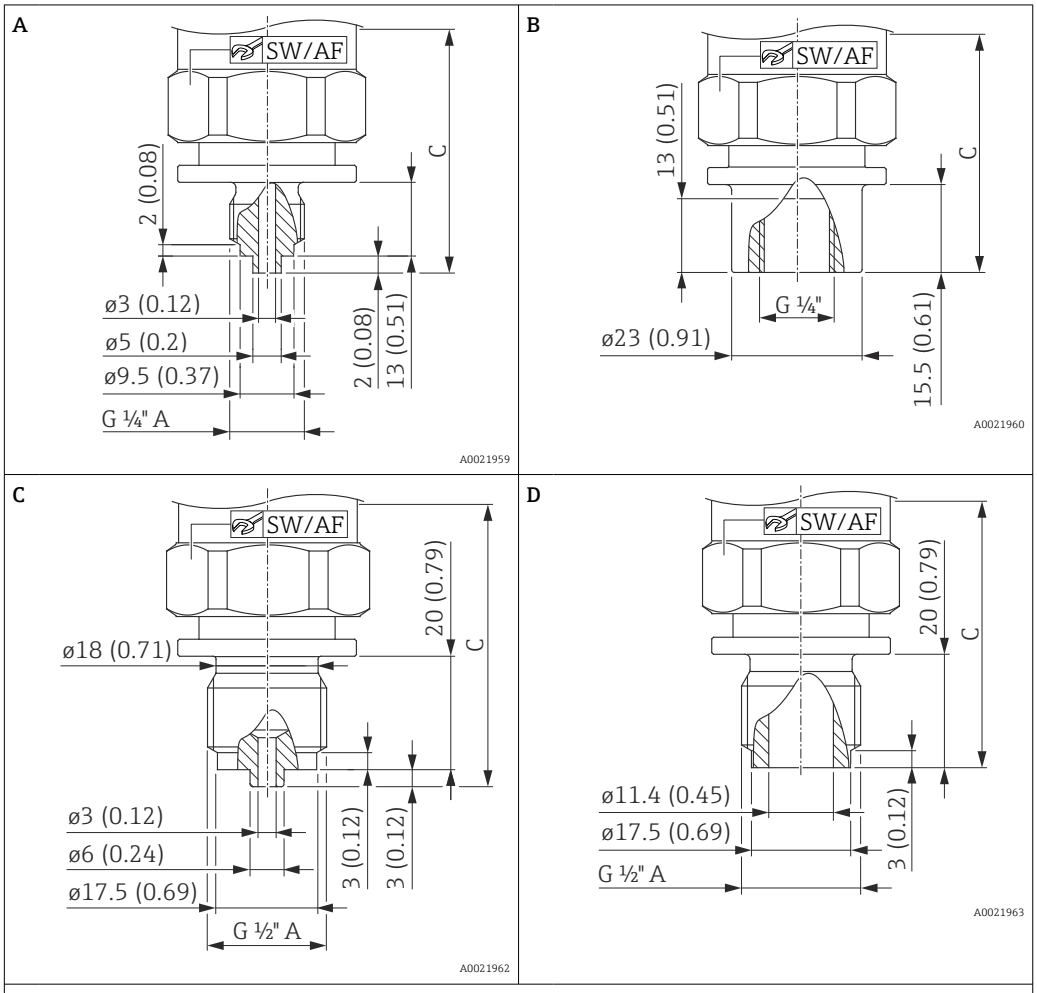

Engineering unit mm (in)

Position	Device	Description	Material	Nominal value to 100 bar (1 500 psi)			Nominal value 400 bar (6 000 psi)			Option [1]
				Weight kg (lbs)	Height C	SW/AF	Weight kg (lbs)	Height C	SW/AF	
A	PTP31B	Thread ISO 228 G ¼" A, EN 837	316L	0.200 (0.44)	57 (2.24)	32	0.240 (0.53)	69 (2.72)	27	WTJ
B	PTP31B	Thread ISO 228 G ¼" (female)	316L	0.220 (0.49)	57 (2.24)	32	0.260 (0.57)	69 (2.72)	27	WAJ
C	PTP31B	Thread ISO 228 G ½" A, EN 837	316L	0.220 (0.49)	65 (2.56)	32	0.270 (0.60)	77 (3.03)	27	WBJ
D	PTP31B	Thread ISO 228 G ½" A, bore11.4 mm (0.45 in)	316L	0.220 (0.49)	62 (2.44)	32	0.260 (0.57)	74 (2.91)	27	WWJ

1) Product Configurator, order code for "Process connection"

Process connections with internal, metallic process membrane

Thread ASME

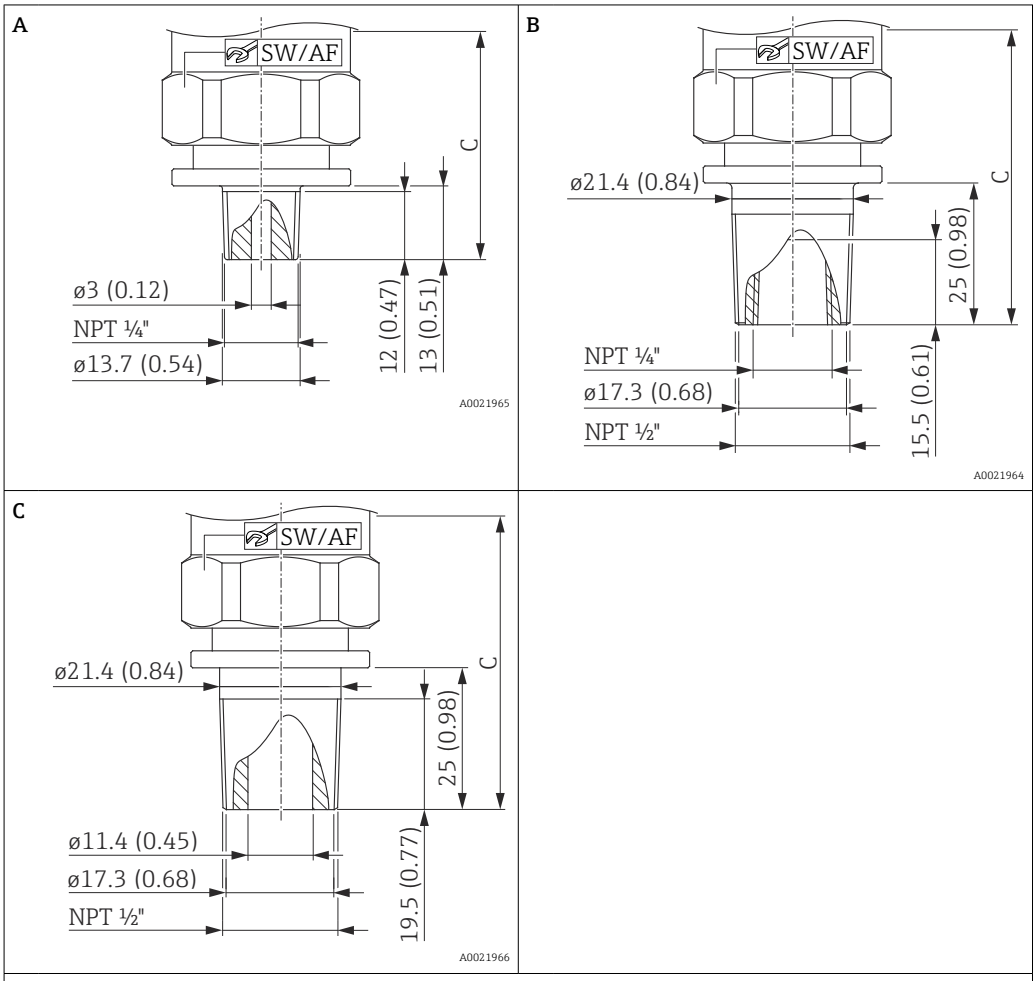

Engineering unit mm (in)

Item	Device	Designation	Material	Nominal value Up to 100 bar (1 500 psi)			Nominal value 400 bar (6 000 psi)			Approval	Option [1]
				Weight kg (lbs)	Height C	SW/AF	Weight kg (lbs)	Height C	SW/AF		
A	PTP31B	ASME ¼" MNPT, bore 3 mm (0.12 in)	316L	0.200 (0.44)	55 (2.17)	32	0.240 (0.53)	67 (2.64)	27	CRN	VUJ
B	PTP31B	ASME ½" MNPT, ¼" FNPT (female)	316L	0.230 (0.51)	67 (2.64)	32	0.260 (0.57)	79 (3.11)	27	CRN	VXJ
C	PTP31B	ASME ½" MNPT, bore 11.4 mm (0.45 in)	316L	0.230 (0.51)	67 (2.67)	32	0.270 (0.60)	79 (3.11)	27	CRN	VWJ

1) Product Configurator, order code for "Process connection"

Process connections with internal, metallic process membrane

Thread DIN13

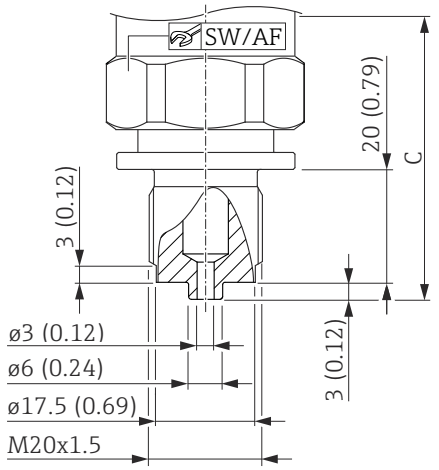

Engineering unit mm (in)

Description	Device	Material	Nominal value to 100 bar (1 500 psi)			Nominal value 400 bar (6 000 psi)			Option [1]
			Weight kg (lbs)	Height C	SW/ AF	Weight kg (lbs)	Height C	SW/ AF	
DIN 13 M20 x 1.5, EN 837, bore 3 mm (0.12 in)	PTP31B	316L	0.220 (0.49)	65 (2.56)	32	0.260 (0.57)	77 (3.03)	27	X4J

1) Product Configurator, order code for "Process connection"

Process connections with internal, metallic process membrane

Thread JIS B0203

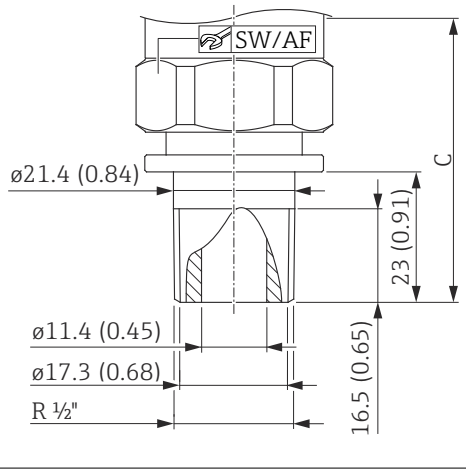

Engineering unit mm (in). Diameter of process isolating diaphragm: 17.2 mm (0.68 in)

Description	Device	Material	Nominal value to 100 bar (1 500 psi)			Nominal value 400 bar (6 000 psi)			Option [1]
			Weight kg (lbs)	Height C	SW/ AF	Weight kg (lbs)	Height C	SW/ AF	
JIS B0203 R ½" (male)	PTP31B	316L	0.230 (0.51)	65 (2.56)	32	0.260 (0.57)	77 (3.03)	27	ZJJ

1) Product Configurator, order code for "Process connection"

Process connections with flush-mounted, metallic process membrane

Thread ISO 228 G

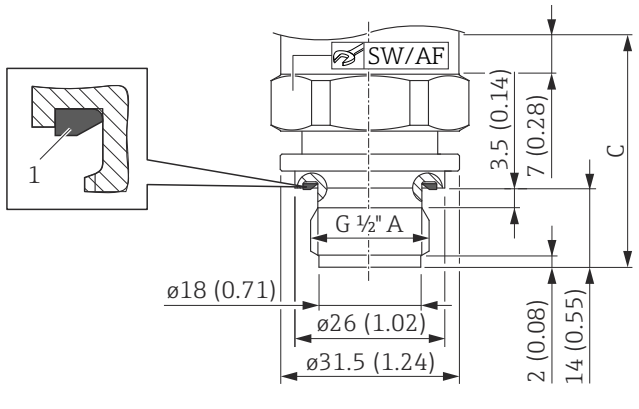

1 FKM form seal, pre-mounted

Engineering unit mm (in). Diameter of process isolating diaphragm: 17.2 mm (0.68 in)

Device	Designation	Material	Nominal value to 100 bar (1 500 psi)			Nominal value 400 bar (6 000 psi)			Option [1]
			Weight kg (lbs)	Height C	SW/ AF	Weight kg (lbs)	Height C	SW/ AF	
PTP31B	Thread ISO 228 G ½" A DIN3852, shape E	316L	0.140 (0.31)	41 (1.61)	32	0.120 (0.26)	35 (1.38)	32	WJJ

1) Product Configurator, order code for "Process connection"

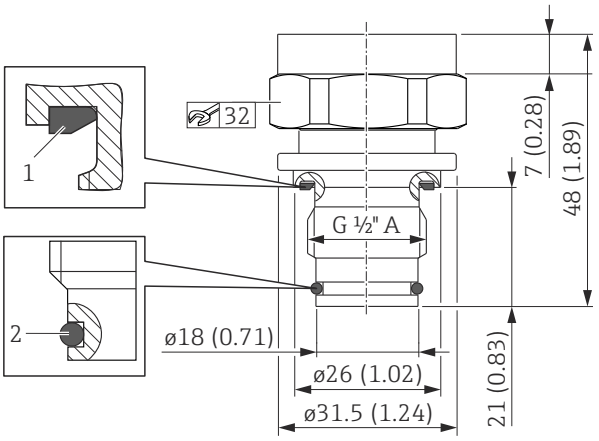

1 FKM form seal, pre-mounted
2 FKM O-ring, pre-mounted

Engineering unit mm (in). Diameter of process isolating diaphragm: 17.2 mm (0.68 in)

Device [1]	Designation	Material	Weight kg (lbs)	Option [2]
PTP31B	Thread ISO 228 G ½" A O-ring seal, flush-mounted	316L	0.150 (0.33)	WUJ

1) Suitable for weld-in adapter 52002643 and 52010172
2) Product Configurator, order code for "Process connection"

Materials in contact with process

NOTICE

- Device components in contact with the process are listed in the "Mechanical construction" and "Ordering information" sections.

TSE Certificate of Suitability

The following applies to all device components in contact with the process:

- They do not contain any materials derived from animals.
- No additives or operating materials derived from animals are used in production or processing.

Process connections

Endress+Hauser supplies a threaded connection made of stainless steel in accordance with AISI 316L (DIN/ EN material number 1.4404 or 1.4435). With regard to their stability-temperature property, the materials 1.4404 and 1.4435 are grouped together under 13E0 in EN 1092-1: 2001 Tab. 18. The chemical composition of the two materials can be identical.

Process isolating diaphragm

Description	Material
Ceramic process isolating diaphragm	Al_2O_3 aluminum-oxide ceramic, Ceraphire® FDA, ultrapure 99.9 % (see also www.endress.com/ceraphire) The US Food & Drug Administration (FDA) has no objections to the use of ceramics made from aluminum oxide as a surface material in contact with foodstuffs. This declaration is based on the FDA certificates of our ceramic suppliers.
Metal process isolating diaphragm	AISI 316L (DIN/EN material number 1.4435)

Seals

See the specific process connection.

Materials not in contact with process

Housing

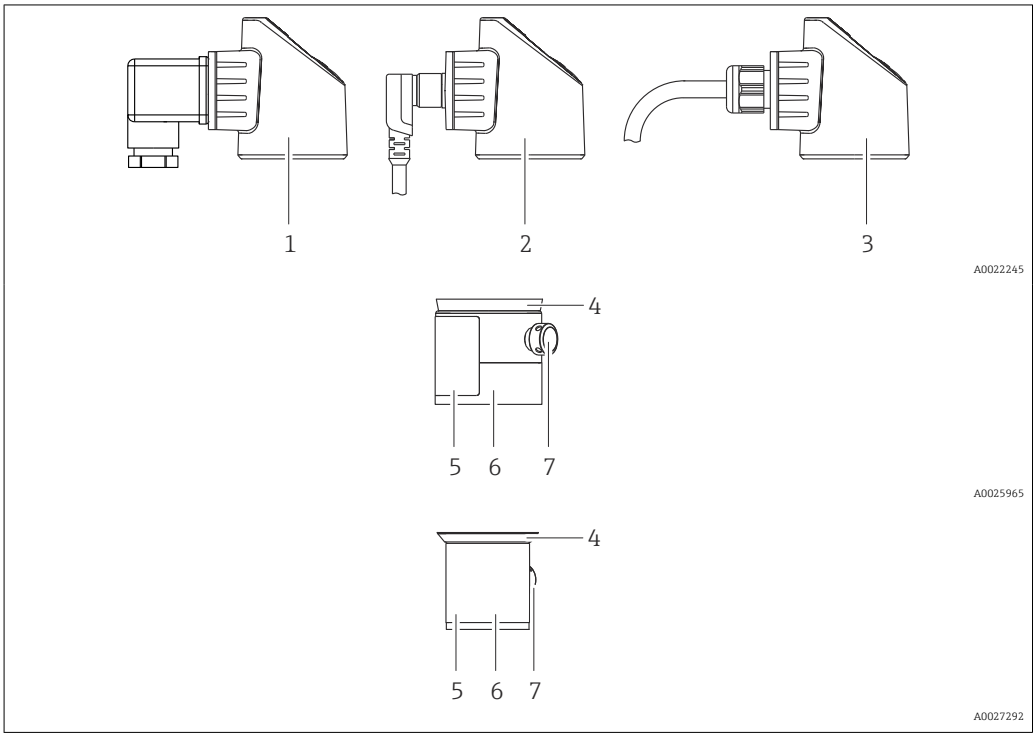

Item number	Component	Material
1	Housing with valve plug connection	▪ Seal: NBR ▪ Plug: PA ▪ Screw: V2A ▪ Adapter plate: PBT/PC ▪ Housing: PBT/PC
2	Housing prepared for M12 plug connection	▪ Adapter plate: PBT/PC ▪ For other materials, see the "Accessories" section ▪ Housing: PBT/PC
3	Housing with cable connection	▪ Pressure screw: PVDF ▪ Seal: TPE-V ▪ Cable: PUR (UL 94 V0) ▪ Adapter plate: PBT/PC ▪ Housing: PBT/PC
4	Design element	PBT/PC
5	Nameplates	Plastic foil (attached to housing) or directly lasered onto the housing
6	Housing	316L (1.4404)
7	Pressure compensation element	PBT/PC

Filling oil

Device	Filling oil
PTP31B	Synthetic oil polyalphaolefin FDA 21 CFR 178.3620, NSF H1

Cleaning

Device	Description	Option [1]
PTC31B PTP31B	Cleaned from oil+grease	HA
PTC31B	Cleaned for oxygen service	HB

1) Product Configurator, order code for "Service"

Operability

IO-Link

Operating concept for devices with IO-Link

Operator-oriented menu structure for user-specific tasks

Reliable operation

Operation in the following languages:
Via IO-Link: English

Efficient diagnostics increase measurement reliability

- Remedial measures
- Simulation options

IO-Link information

IO-Link is a point-to-point connection for communication between the measuring device and an IO-Link master. The measuring device features an IO-Link communication interface type 2 with a second IO function on pin 4. This requires an IO-Link-compatible assembly (IO-Link master) for operation. The IO-Link communication interface enables direct access to the process and diagnostic data. It also provides the option of configuring the measuring device while in operation.

Physical layer, the measuring device supports the following features:
- IO-Link specification: Version 1.1
- IO-Link Smart Sensor Profile 2nd Edition
- SIO mode: Yes
- Speed: COM2; 38.4 kBaud
- Minimum cycle time: 2.5 msec.
- Process data width:
  - Without Smart Sensor Profile: 32 bit
  - With Smart Sensor Profile: 48 bit (float32 + 14-bit vendor spec. + 2 bits SSC)
- IO-Link data storage: Yes
- Block configuration: Yes

IO-Link download

http://www.endress.com/download
- Select "Software" as the media type.
- Select "Device Driver" as the software type.
  Select IO-Link (IODD).
- In the "Text Search" field enter the device name.

https://ioddfinder.io-link.com/
Search by
- Manufacturer
- Article number
- Product type

Operation with local display

Overview

A 1-line liquid crystal display (LCD) is used for display and operation. The local display shows measured values, fault messages and information messages and therefore supports the user through each operating step.

During measuring operation, the display shows measured values, fault messages and notice messages. In addition, it is possible to switch to menu mode via the operating keys.

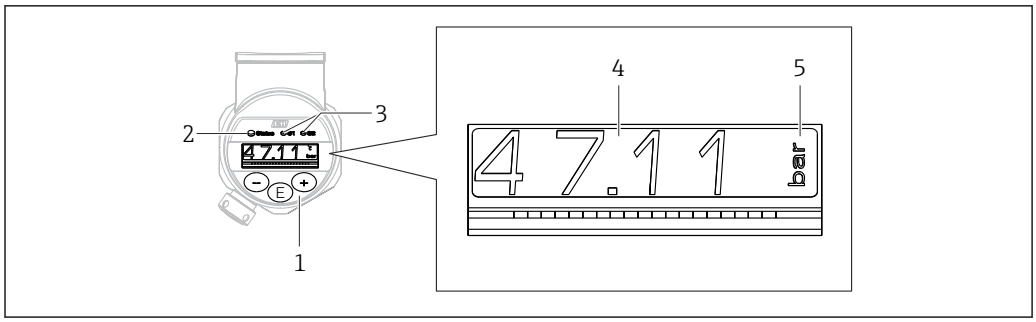

1 *Operating keys*
2 *Status LED*
3 *Switch output LEDs*
4 *Measured value*
5 *Unit*

The second switch output is not used for the device version with current output.

Functions:
- 4-digit measured value display and decimal point
- Simple and complete menu guidance due to breakdown of parameters into several levels and groups
- Possibility to configure the display in accordance with individual wishes and requirements
- Comprehensive diagnostic functions (fault and warning message, peak-hold indicators, etc.)
- Quick and safe commissioning
- The device also signals the status via LEDs.

Information on the operational states

Operational states	Function of status-LED and onsite display
Operation	▪ Status LED is lit green ▪ LEDs of switch output 1 and switch output 2 signal the status of each switch output ▪ No activity of LED for switch output 2 if current output is active ▪ White background lighting
Problem	▪ Status LED lit steady red ▪ Red display background ▪ LED of switch output 1 and switch output 2 off (switch output is deactivated)
Warning	▪ Status LED flashing red ▪ White display background ▪ LEDs of switch output 1 and switch output 2 signal the status of each switch output
For Device Search	▪ The green LED is lit (= operational) on the device and starts to flash with increased luminosity. Flash frequency ▪ LEDs of switch output 1 and switch output 2 signal the status of each switch output ▪ Display background depending on the device status
IO-Link communication	▪ Status LED flashes green as per IO-Link specification (regardless of measuring operation, error or warning). Flash frequency ▪ Display background depending on the device status ▪ The state of switch output 1 is also indicated via the LED of switch output 1 at the same time as the process data are displayed

Device Search (IO-Link)

The Device Search parameter is used to uniquely identify the device during installation.

Certificates and approvals

CE mark

The device meets the legal requirements of the relevant EC directives. Endress+Hauser that the device has been successfully tested by applying the CE mark.

RoHS

The measuring system meets the substance restrictions of the Directive on the Restriction of the Use of Certain Hazardous Substances 2011/65/EU (RoHS 2) and the Delegated Directive (EU) 2015/863 (RoHS 3).

RCM marking

The supplied product or measuring system meets the ACMA (Australian Communications and Media Authority) requirements for network integrity, interoperability, performance characteristics as well as health and safety regulations. Here, especially the regulatory arrangements for electromagnetic compatibility are met. The products bear the RCM marking on the nameplate.

A0029561

Safety Instructions (XA)

Safety Instructions (XA) are supplied with the device depending on the approval. The Safety Instructions are an integral part of the Operating Instructions.

The nameplate indicates which Safety Instructions (XA) apply to the device in question.

Pressure Equipment Directive 2014/68/EU (PED)

Pressure equipment with permitted pressure ≤ 200 bar (2 900 psi)

Pressure equipment (maximum working pressure PS ≤ 200 bar (2 900 psi)) can be classified as pressure accessories in accordance with Pressure Equipment Directive 2014/68/EU. If the maximum working pressure is ≤ 200 bar (2 900 psi) and the pressurized volume of the pressure equipment is ≤ 0.1 l, the pressure equipment is subject to the Pressure Equipment Directive (see Pressure Equipment Directive 2014/68/EU, Article 4, point 3). The Pressure Equipment Directive only requires that the pressure equipment shall be designed and manufactured in accordance with the “sound engineering practice of a Member State”.

Reasons:

- Pressure Equipment Directive 2014/68/EU Article 4, point 3
- Pressure Equipment Directive 2014/68/EU, Commission's Working Group "Pressure", Guideline A-05 + A-06

Note:

A separate assessment must be performed for pressure equipment that is part of a safety instrumented system intended to protect a pipe or vessel from exceeding allowable limits (equipment with safety function in accordance with Pressure Equipment Directive 2014/68/EU, Article 2, point 4).

Pressure equipment with allowable pressure > 200 bar (2 900 psi)

Pressure equipment intended for use in any process fluid and having a pressurized volume of < 0.1 l and a maximum allowable pressure PS > 200 bar (2 900 psi) must satisfy the essential safety requirements set out in Annex I of the Pressure Equipment Directive 2014/68/EU. According to Article 13, pressure equipment must be classified into categories in accordance with Annex II. Taking into account the small volume specified above, the pressure equipment can be categorized into Category I. They must then bear a CE mark.

Reasons:

- Pressure Equipment Directive 2014/68/EU, Article 13, Annex II
- Pressure Equipment Directive 2014/68/EU, Commission´s Working Group "Pressure", Guideline A-05

Note:

A separate assessment must be performed for pressure equipment that is part of a safety instrumented system intended to protect a pipe or vessel from exceeding allowable limits (equipment with safety function in accordance with Pressure Equipment Directive 2014/68/EU, Article 2, point 4).

The following also applies:

PTP31B with threaded connection and internal membrane PN > 200 :

Suitable for stable gases in group 1, category I, module A

External standards and guidelines

The applicable European guidelines and standards can be found in the relevant EU Declarations of Conformity. The following standards were also applied:

DIN EN 60770 (IEC 60770):

Transmitters for use in industrial process control systems Part 1: Methods for performance evaluation

Methods for evaluating the performance of transmitters for control and regulation in industrial process control systems.

DIN 16086:

Electrical pressure measuring instruments, pressure sensors, pressure transmitters, pressure measuring instruments, concepts, specifications in data sheets

Procedure for writing specifications in data sheets for electrical pressure measuring instruments, pressure sensors and pressure transmitters.

EN 61326-X:

EMC product family standard for electrical equipment for measurement, control, regulation and laboratory procedures.

EN 60529:

Degrees of protection provided by enclosure (IP code)

NAMUR - User association of automation technology in process industries.

NE21 - Electromagnetic Compatibility (EMC) of Industrial Process and Laboratory Control Equipment.

NE 43 - Standardization of the Signal Level for the Failure Information of Digital Transmitters.

NE44 - Standardization of Status Indicators on PCT Instruments with the Help of Light Emitting Diodes

NE53 - Software of Field Devices and Signal-processing Devices with Digital Electronics

NE107 - Self-monitoring and Diagnosis of Field Devices

VDMA 24574-1:2008-04

Fluid technology terms, menu navigation and electrical connection for fluid sensors, Part 1: Pressure switches

CRN approval

Some device versions have CRN approval. A CRN-approved process connection with a CSA approval must be ordered for a CRN-approved device. The CRN-approved devices are assigned the registration number 0F18141.5C.

Ordering information: Product Configurator, order code for "Process connection" (the CRN process connections are indicated appropriately in the "Mechanical construction" section.)

Calibration unit

Name	Option [1)]
Sensor range; %	A
Sensor range; mbar/bar	B
Sensor range; kPa/MPa	C

Name	Option [1]
Sensor range; psi	F
Switch 1; see additional spec.	S
Switch 1 + 2; see additional spec.	T
Switch, analog output; see additional spec.	U

1) Product Configurator, order code for "Calibration; unit"

Calibration

Name	Option [1]
3-point calibration certificate [2]	F3

1) Product Configurator, order code for "Calibration"
2) No final test report for PNP outputs.

Inspection certificates

Device	Name	Option [1]
PTC31B PTP31B	3.1 Material documentation, wetted metal parts, EN10204-3.1 inspection certificate	YES

1) Product Configurator, order code for "Test, Certificate"

Documentation currently available on the Endress+Hauser website: www.endress.com → Downloads or with the serial number of the device under Online Tools in the Device Viewer.

Service

Product documentation on paper

A printed (hard copy) version of test reports, declarations and inspection certificates can optionally be ordered via order code 570 "Service", option I7 "Product documentation on paper". The documents are then provided with the device upon delivery.

Ordering information

Detailed ordering information is available from the following sources:
- In the Product Configurator on the Endress+Hauser website: www.endress.com -> Click "Corporate" -> Select your country -> Click "Products" -> Select the product using the filters and search field -> Open product page -> The "Configure" button to the right of the product image opens the Product Configurator.
- From your Endress+Hauser Sales Center: www.addresses.endress.com

Product Configurator - the tool for individual product configuration
- Up-to-the-minute configuration data
- Depending on the device: Direct input of measuring point-specific information such as measuring range or operating language
- Automatic verification of exclusion criteria
- Automatic creation of the order code and its breakdown in PDF or Excel output format
- Ability to order directly in the Endress+Hauser Online Shop

Scope of delivery

- Measuring device
- Optional accessories
- Brief Operating Instructions
- Certificates

Accessories

Weld-in adapter

Various weld-in adapters are available for installation in vessels or pipes.

Device	Description	Option [1]	Order number
PTP31B	Weld-in adapter G½, 316L	QA	52002643
PTP31B	Weld-in adapter G½, 316L 3.1 EN10204-3.1 material, inspection certificate	QB	52010172
PTP31B	Weld-in tool adapter G½, brass	QC	52005082

1) Product Configurator, order code for "Enclosed accessories"

If installed horizontally and weld-in adapters with a leakage hole are used, ensure that the leakage hole is pointing down. This allows leaks to be detected as quickly as possible.

For detailed information, see "Technical Information" TI00426F (weld-in adapters, process adapters and flanges).

Available in the Download Area of the Endress+Hauser website (www.endress.com/downloads).

M12 plug connectors

Plug	Degree of protection	Material	Option [1]	Order number
M12 (self-terminated connection at M12 plug) 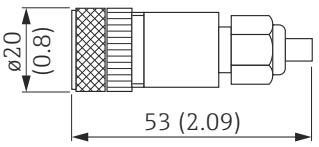 	IP67	▪ Union nut: Cu Sn/Ni ▪ Body: PBT ▪ Seal: NBR	R1	52006263
M12 90 degrees with 5m (16 ft) cable 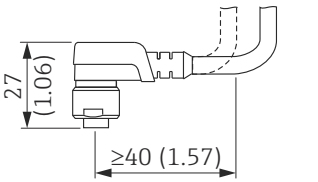 	IP67	▪ Union nut: GD Zn/Ni ▪ Body: PUR ▪ Cable: PVC Cable colors ▪ 1 = BN = brown ▪ 2 = WT = white ▪ 3 = BU = blue ▪ 4 = BK = black	RZ	52010285
M12 90 degrees (self-terminated connection at M12 plug) 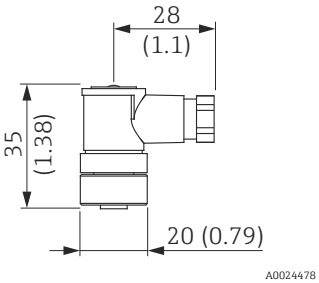 	IP67	▪ Union nut: GD Zn/Ni ▪ Body: PBT ▪ Seal: NBR	RM	71114212

1) Product Configurator, order code for "Enclosed accessories"

Supplemental documentation

Field of activities	Pressure measurement, powerful measuring instruments for process pressure, differential pressure, level and flow: FA00004P
Technical Information	▪ TI00241F: EMC Test Procedures ▪ TI00426F: Weld-in adapters, process adapters and flanges (overview)
Safety Instructions (XA)	Safety Instructions (XA) are supplied with the device depending on the approval. The Safety Instructions are an integral part of the Operating Instructions. The nameplate indicates which Safety Instructions (XA) apply to the device in question.

Registered trademarks

IO-Link

is a registered trademark of the IO-Link Community.

71719611

www.addresses.endress.com

Endress+Hauser

People for Process Automation