KA01682F/00/EN/03.26-00
71783254
2026-09-11

Brief Operating Instructions
Liquiphant FTL51B

Vibronic
PROFINET over Ethernet-APL
Level switch for liquids

These Brief Operating Instructions are not a substitute for the Operating Instructions. For further information on the product, see:

- www.endress.com/deviceviewer
- Smartphone/tablet: Endress+Hauser Operations app

Endress+Hauser
People for Process Automation

1 Related documentation

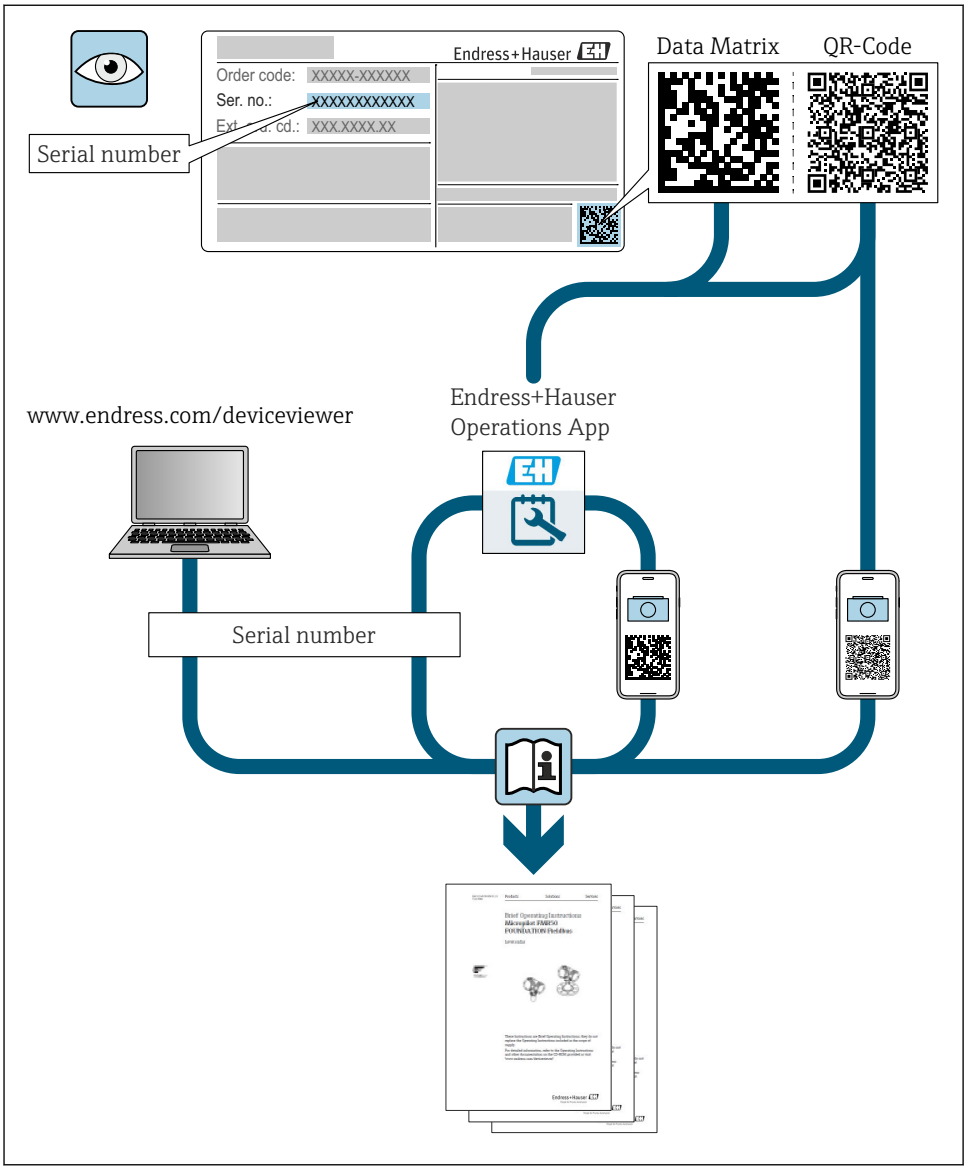

A0023555

2 About this document

2.1 Symbols

2.1.1 Safety symbols

DANGER
This symbol alerts you to a dangerous situation. Failure to avoid this situation will result in serious or fatal injury.

WARNING
This symbol alerts you to a potentially dangerous situation. Failure to avoid this situation can result in serious or fatal injury.

CAUTION
This symbol alerts you to a potentially dangerous situation. Failure to avoid this situation can result in minor or medium injury.

NOTICE
This symbol alerts you to a potentially harmful situation. Failure to avoid this situation can result in damage to the product or something in its vicinity.

2.1.2 Electrical symbols

Ground connection
Grounded clamp, which is grounded via a grounding system.

Protective earth (PE)
Ground terminals, which must be grounded prior to establishing any other connections. The ground terminals are located on the inside and outside of the device.

2.1.3 Tool symbols

Flat-blade screwdriver

Allen key

Open-ended wrench

2.1.4 Communication-specific symbols

Bluetooth® wireless technology
Wireless data transmission between devices over a short distance via radio technology.

2.1.5 Symbols for certain types of Information

Permitted
Procedures, processes or actions that are permitted.

Forbidden
Procedures, processes or actions that are forbidden.

Tip
Indicates additional information

Reference to documentation

Reference to another section

1., 2., 3. Series of steps

2.1.6 Symbols in graphics

A, B, C ... View

1, 2, 3 ... Item numbers

Hazardous area

Safe area (non-hazardous area)

2.2 Registered trademarks

PROFINET®
Registered trademark of the PROFIBUS User Organization, Karlsruhe, Germany

Ethernet-APL™
- Ethernet-APL ADVANCED PHYSICAL LAYER
- Registered trademark of the PROFIBUS Nutzerorganisation e.V. (Profibus User Organization), Karlsruhe - Germany

Bluetooth®
The *Bluetooth®* word mark and logos are registered trademarks owned by the Bluetooth SIG, Inc. and any use of such marks by Endress+Hauser is under license. Other trademarks and trade names are those of their respective owners.

Apple®
Apple, the Apple logo, iPhone, and iPod touch are trademarks of Apple Inc., registered in the U.S. and other countries. App Store is a service mark of Apple Inc.

Android®
Android, Google Play and the Google Play logo are trademarks of Google Inc.

3 Basic safety instructions

3.1 Requirements for the personnel

The personnel must fulfill the following requirements for its tasks:
- ▶ Trained, qualified specialists must have a relevant qualification for this specific function and task.
- ▶ Are authorized by the plant owner/operator.
- ▶ Are familiar with federal/national regulations.
- ▶ Before starting work, read and understand the instructions in the manual and supplementary documentation as well as the certificates (depending on the application).
- ▶ Follow instructions and comply with basic conditions.

3.2 Intended use

The device described in this manual is intended only for the level measurement of liquids.

Do not exceed or drop below the relevant limit values for the device
See the Technical Documentation

Incorrect use
The manufacturer is not liable for damage caused by improper or non-designated use.

Avoid mechanical damage:
- Do not touch or clean device surfaces with pointed or hard objects.

Clarification for borderline cases:
- For special media and fluids for cleaning, Endress+Hauser is glad to provide assistance in verifying the corrosion resistance of fluid-wetted materials, but does not accept any warranty or liability.

Residual risks
Due to the transfer of heat from the process and power dissipation within the electronics, the temperature of the housing may increase to up to 80 °C (176 °F) during operation. When in operation, the sensor can reach a temperature close to the medium temperature.

Danger of burns from contact with surfaces!
- In the event of elevated fluid temperatures, ensure protection against contact to prevent burns.

3.3 Workplace safety

For work on and with the device:
- Wear the required personal protective equipment according to federal/national regulations.

3.4 Operational safety

Damage to the device!
- Operate the device only if it is in proper technical condition, free from errors and faults.
- The operator is responsible for the trouble-free operation of the device.

Configuration, testing and maintenance work on the device

Process safety may be at risk during configuration, testing and maintenance work on the device.
- Alternative supervisory measures must be taken to guarantee the operational safety and process safety.

Modifications to the device

Unauthorized modifications to the device are not permitted and can lead to unforeseeable dangers.
- If modifications are nevertheless required, consult Endress+Hauser.

Repair

To ensure continued operational safety and reliability:
- ▶ Only perform repair work on the device if this is expressly permitted.
- ▶ Observe federal/national regulations pertaining to the repair of an electrical device.
- ▶ Use original spare parts and accessories from Endress+Hauser only.

Hazardous area

To eliminate danger to persons or the facility when the device is used in the hazardous area (e.g. explosion protection):
- ▶ Check the nameplate to verify if the device ordered can be put to its intended use in the hazardous area.
- ▶ Comply with the instructions in the separate supplementary documentation, which is an integral part of this manual.

3.5 Product safety

This state-of-the-art device is designed and tested in accordance with good engineering practice to meet operational safety standards. It left the factory in a condition in which it is safe to operate.

It meets general safety standards and legal requirements. It also complies with the EU directives listed in the device-specific EU declaration of conformity. The manufacturer confirms this by affixing the CE mark.

3.6 IT security

The manufacturer warranty is valid only if the product is installed and used as described in the Operating Instructions. The product features security mechanisms to protect it against any inadvertent changes to the settings. Security measures, which provide additional protection for the product and associated data transfer, must be implemented by the operators themselves in line with their security standards.

3.7 Device-specific IT security

The device offers specific functions to support protective measures by the operator. These functions can be configured by the user and guarantee greater in-operation safety if used correctly. An overview of the most important functions is provided in the following section:

- Write protection via hardware write protection switch
- Access code to change user role (applies to operation via display, Bluetooth® wireless technology or FieldCare, DeviceCare, asset management tools (e.g. AMS, PDM and web server)

Function/interface	Factory setting	Recommendation
Access code (also applies to web server login or FieldCare connection)	Not enabled (0000)	Assign a customized access code during commissioning
Web server	Enabled	On an individual basis following risk assessment

Function/interface	Factory setting	Recommendation
Bluetooth® wireless technology	Enabled	On an individual basis following risk assessment
Service interface (CDI)	Enabled	On an individual basis following risk assessment
Write protection via hardware write protection switch	Not enabled	On an individual basis following risk assessment

3.7.1 Protecting access via a password

Different passwords are available to protect write access to the parameters of the device.

Protect write access to the parameters of the device via the local display, web browser or operating tool (e.g. FieldCare, DeviceCare). Access authorization is clearly regulated through the use of a user-specific access code.

User-specific access code

Write access to the parameters of the device via the local display, web browser or operating tool (e.g. FieldCare, DeviceCare) can be protected using the editable, user-specific access code.

When delivered, the device does not have an access code; the default value is *0000* (open).

General notes on the use of passwords

- During commissioning, change the access code used when the device was delivered
- When defining and managing the access code, comply with the general rules for the generation of a secure password
- The user is responsible for managing the access code and for using the code with due care

For more information, see the "Resetting the device" section.

3.7.2 Access via web server

Thanks to the integrated web server, the device can be operated and configured using a web browser and via PROFINET over Ethernet-APL. In addition to the measured values, status information on the device is displayed and can be used to monitor device health. Furthermore the device data can be managed and the network parameters can be configured.

Access to the network is required for the PROFINET over Ethernet-APL connection.

Supported functions
Data exchange between the operating unit (such as a notebook, for example,) and device:
- Export of parameter settings (PDF file, create documentation of the measuring point configuration)
- Export of Heartbeat Technology verification report (PDF file, only available with the application package Heartbeat Verification + Monitoring)
- Export of WHG mode report
- Download driver (GSDML) for system integration

The web server is enabled when the device is delivered. The web server can be disabled via the **Web server functionality** parameter if necessary (e.g. after commissioning).

The device and status information can be hidden on the login page. This prevents unauthorized access to the information.

Description of device parameters.

4 Incoming acceptance and product identification

4.1 Incoming acceptance

On receipt of the delivery:

1. Check the packaging for damage.
   ↳ Report all damage immediately to the manufacturer.
   Do not install damaged components.
2. Check the scope of delivery using the delivery note.
3. Compare the data on the nameplate with the order specifications on the delivery note.
4. Check the technical documentation and all other necessary documents, e.g. certificates, to ensure they are complete.

If one of the conditions is not satisfied, contact the manufacturer.

4.2 Product identification

The following options are available for identification of the device:
- Nameplate specifications
- Order code with breakdown of the device features on the delivery note
- Enter the serial numbers from the nameplates in *Device Viewer* (www.endress.com/deviceviewer): all the information about the device is displayed.

4.2.1 Nameplate

Do you have the correct device?

The nameplate provides you with the following information on the device:
- Manufacturer identification, device designation
- Order code
- Extended order code
- Serial number
- Tag name (TAG) (optional)
- Technical values such as supply voltage, current consumption, ambient temperature, communication-specific data (optional)
- Degree of protection
- Approvals with symbols
- Reference to Safety Instructions (XA) (optional)

▶ Compare the information on the nameplate with the order.

4.2.2 Manufacturer address

Endress+Hauser SE+Co. KG
Hauptstraße 1
79689 Maulburg, Germany

Place of manufacture: See nameplate.

4.3 Storage and transport

4.3.1 Storage conditions

Use original packaging.

Storage temperature

−40 to +80 °C (−40 to +176 °F)

4.3.2 Transporting the device

- Transport the device to the measuring point in the original packaging
- Hold the device by the housing, temperature spacer, flange or extension pipe
- Do not bend, shorten or extend the tuning fork

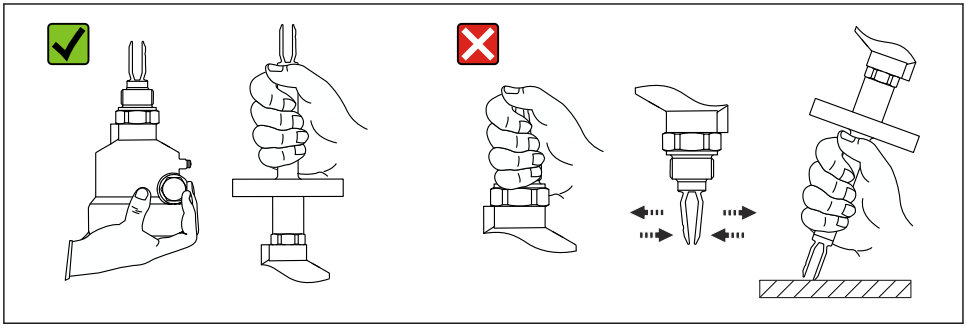

1 *Handling the device during transportation*

5 Installation

Mounting instructions

- Any orientation for compact version or version with a pipe length of up to 500 mm (19.7 in)approx.
- Vertical orientation from above for device with long pipe
- Minimum distance between the tuning fork and the tank wall or pipe wall: 10 mm (0.39 in)

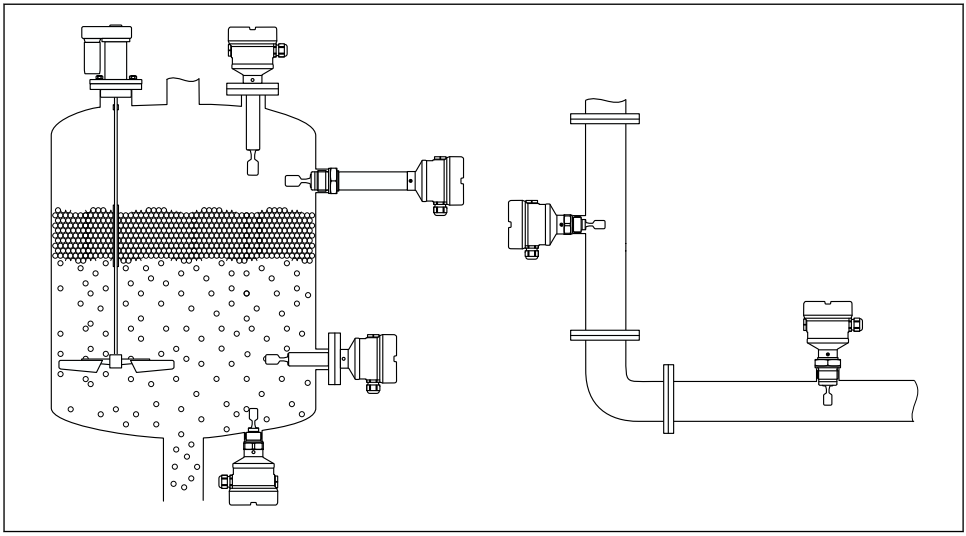

A0037879

2 Installation examples for a vessel, tank or pipe

5.1 Installation requirements

5.1.1 Taking the switch point into consideration

The following are typical switch points, depending on the orientation of the level switch.

Minimum distance between the tuning fork and the tank wall or pipe wall:
10 mm (0.39 in)

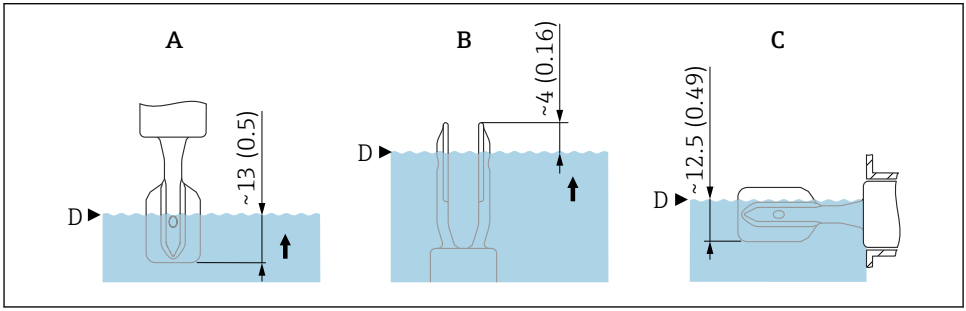

A0037915

3 Typical switch points. Unit of measurement mm (in)

A Installation from above
B Installation from below
C Installation from the side
D Switch point (at reference operating conditions, e.g., water with a temperature of 23 °C (73 °F))

5.1.2 Take viscosity into consideration

Viscosity values
- Low viscosity : < 2 000 mPa·s
- High viscosity: > 2 000 to 10 000 mPa·s

Low viscosity

Low viscosity, e.g. water: < 2 000 mPa·s

It is permitted to position the tuning fork within the installation socket.

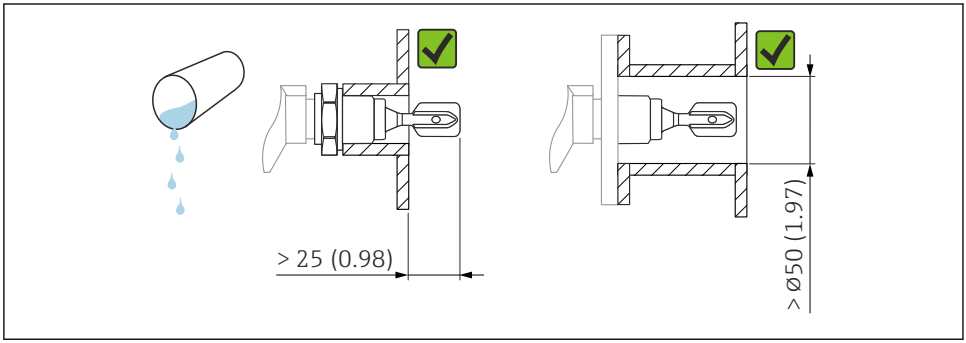

4 *Installation example for low-viscosity liquids. Unit of measurement mm (in)*

High viscosity

NOTICE

Highly viscous liquids may cause switching delays.
- ▶ Make sure that the liquid can run off the tuning fork easily.
- ▶ Deburr the socket surface.

High viscosity, e.g. viscous oils: ≤ 10 000 mPa·s

The tuning fork must be located outside the installation socket!

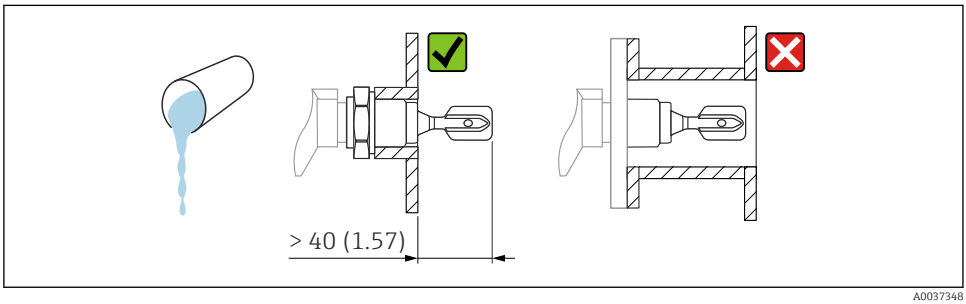

5 *Installation example for a highly viscous liquid. Unit of measurement mm (in)*

5.1.3 Avoid buildup

- Use short installation sockets to ensure that the tuning fork projects freely into the vessel
- Leave sufficient distance between the buildup expected on the tank wall and the tuning fork

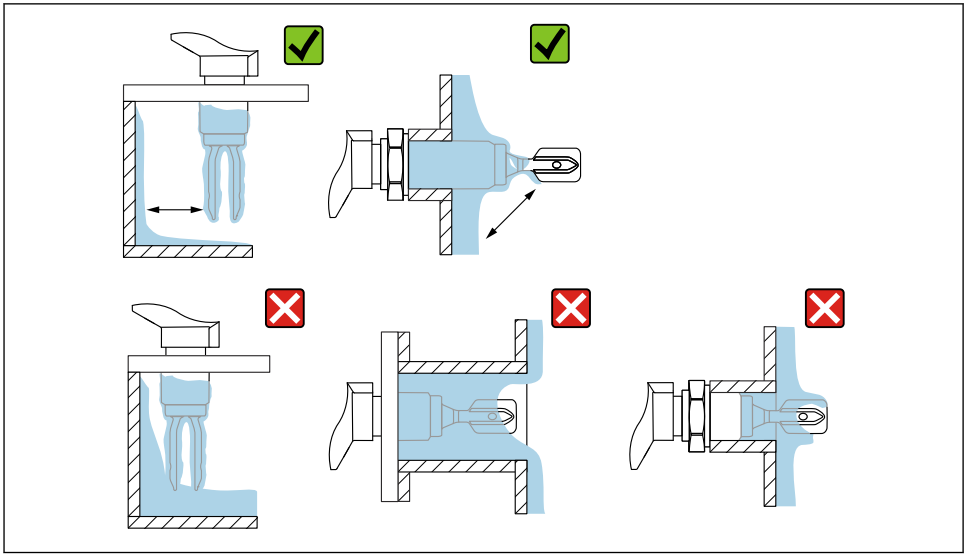

6 *Installation examples for a highly viscous process medium*

5.1.4 Take clearance into consideration

Allow sufficient space outside the tank for mounting, connection and settings involving the electronic insert.

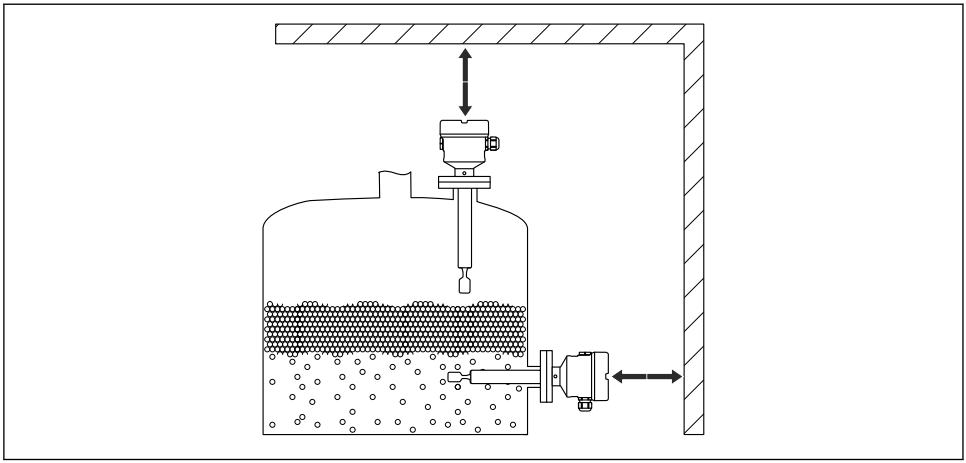

7 *Take clearance into consideration*

5.1.5 Support the device

Support the device in the event of severe dynamic load. Maximum lateral loading capacity of the pipe extensions and sensors: 75 Nm (55 lbf ft).

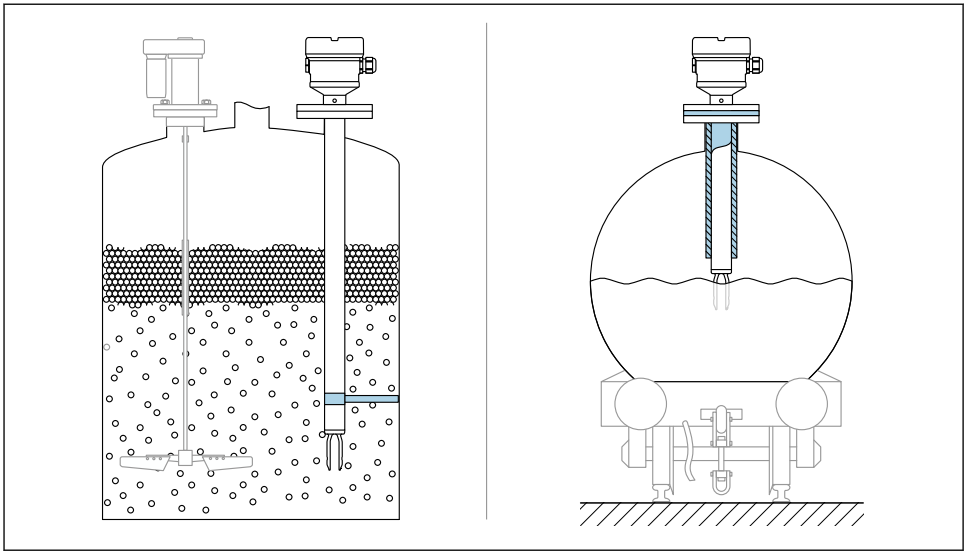

A0031874

8 *Examples of support in the event of dynamic load*

Marine approval: In the case of pipe extensions or sensors longer than 1 600 mm (63 in), a support is needed at least every 1 600 mm (63 in).

5.1.6 Weld-in adapter with leakage hole

Position the weld-in adapter so that the leakage hole points downwards. This allows any leakage to be detected at an early stage, as the escaping medium becomes visible.

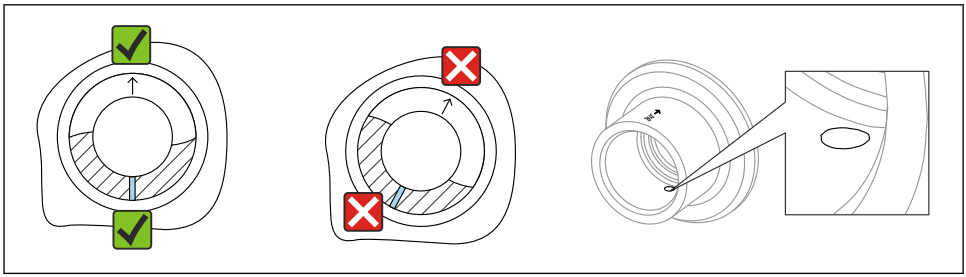

A0039230

9 *Weld-in adapter with leakage hole*

5.2 Installing the device

5.2.1 Installation

Align the vibrating fork using the marking

The vibrating fork can be aligned using the marking in such a way that the medium drains off easily and buildup is avoided.

- Markings for threaded connections: Circle (material specification/thread designation opposite)
- Markings for flange or clamp connections: Line or double line

In addition, the threaded connections have a matrix code that is **not** used for alignment.

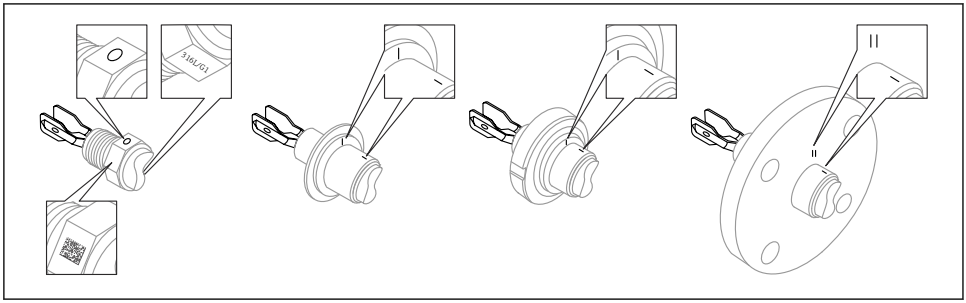

10 *Position of the vibrating fork when installed horizontally in the vessel using the marking*

Installing the device in piping

- Flow velocity up to 5 m/s with a viscosity of 1 mPa·s and density of 1 g/cm³ (62.4 lb/ft³) (SGU).
  Check for correct functioning in the event of other process medium conditions.
- The flow will not be significantly impeded if the tuning fork is correctly aligned and the marking is pointing in the direction of flow.
- The marking is visible when installed

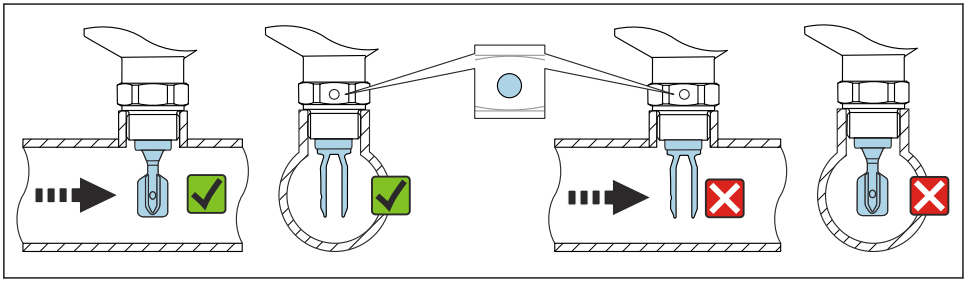

11 *Installation in pipes (take fork position and marking into consideration)*

Screwing in the device

- Turn by the hex bolt only, 15 to 30 Nm (11 to 22 lbf ft)
- Do not turn at the housing!

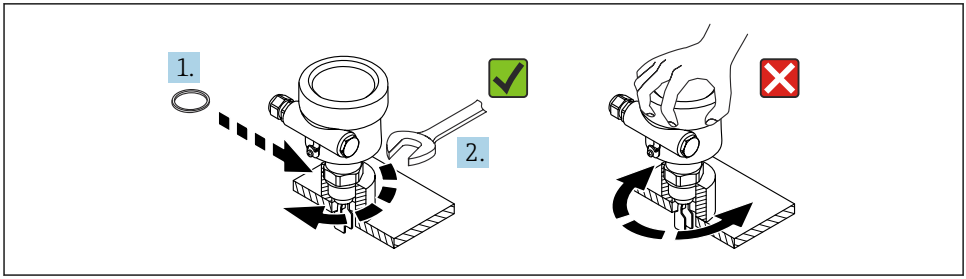

A0034852

12 *Screwing in the device*

Aligning the cable entry

All housings can be aligned. Forming a drip loop on the cable prevents moisture from entering the housing.

Housing without set screw

The device housing can be rotated up to 350°.

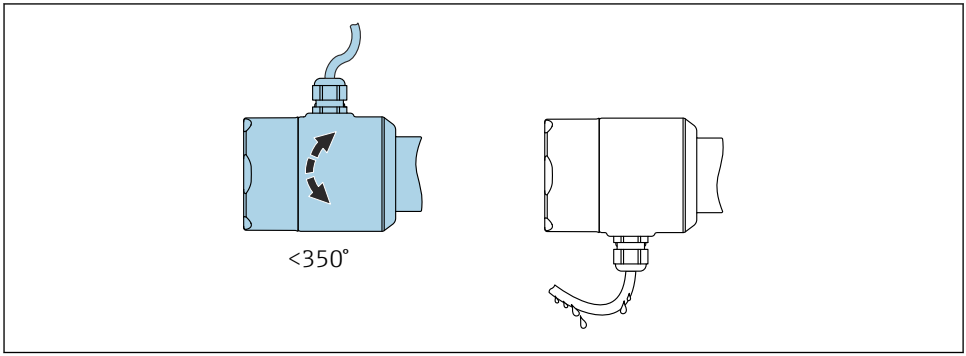

A0052359

13 *Housing without set screw; form a drip loop on the cable.*

Housing with locking screw

NOTICE

The locking screw is not sufficiently tightened when the device is delivered.

The housing may rotate and become loose due to vibration.

▶ Tighten the locking screw to 3.5 Nm (2.58 lbf ft).

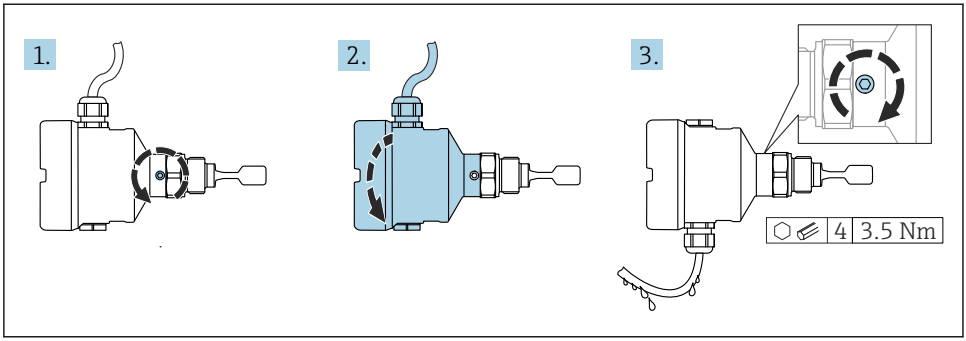

14 Housing with external locking screw; form a drip loop on the cable

1. Loosen the external locking screw (maximum 1.5 turns).
2. Turn the housing and align the cable entry.
3. Tighten the external locking screw.

Rotating the housing

The housing can be rotated up to 380° by loosening the locking screw.

NOTICE

The housing cannot be completely unscrewed.

- Loosen the external locking screw by a maximum of 1.5 turns. If the screw is turned further or completely removed (beyond the screw lifting point), small parts (counter disk) may become loose and fall out.
- Tighten the locking screw (hex socket 4 mm (0.16 in)) to 3.5 Nm (2.58 lbf ft) ±0.3 Nm (±0.22 lbf ft).

Closing the housing covers

NOTICE

Thread and housing cover damaged from dirt and fouling!

- Remove dirt (e.g. sand) on the thread of the covers and housing.
- If you continue to encounter resistance when closing the cover, check the thread again for fouling.

Housing thread

The threads of the electronics and connection compartment can be coated with an anti-friction coating.
The following applies for all housing materials:
Do not lubricate the housing threads.

Turning the display module

WARNING

Opening the device in hazardous environments when the supply voltage is connected

Explosion hazard due to live electrical energy.

- Do not open devices with Ex d or Ex t approval as long as the supply voltage is connected.
- Before opening the device, switch off the supply voltage and ensure no voltage is present.

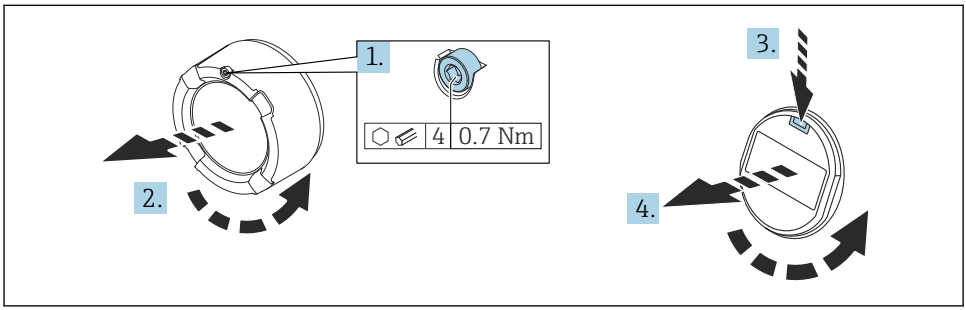

A0038224

1. If fitted: release the screw of the cover lock for the electronics compartment cover using the Allen key.
2. Unscrew the cover from the housing and inspect the cover seal.
3. Press the release mechanism and remove the display module.
4. Turn the display module to the desired position: maximum 4 × 90 ° in each direction.
5. Insert the display module into the desired position until it clicks into place.
6. Screw the cover tightly back onto the housing.
7. If fitted: tighten the screw of the cover lock using the Allen key 0.7 Nm (0.52 lbf ft) ±0.2 Nm (±0.15 lbf ft).

In the case of a dual-compartment housing, the display can be mounted in the electronics compartment as well as in the connection compartment.

Changing the installation position of the display module

The installation position of the display can be changed in the case of the dual compartment housing, L-form.

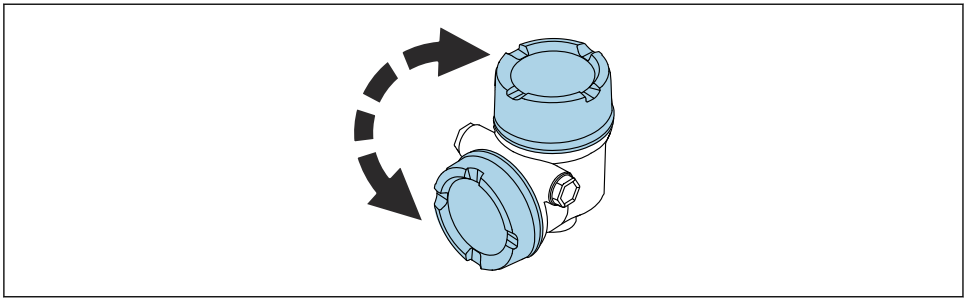

A0048401

WARNING

Opening the device in hazardous environments when the supply voltage is connected

Explosion hazard due to live electrical energy.

- ▶ Do not open devices with Ex d or Ex t approval as long as the supply voltage is connected.
- ▶ Before opening the device, switch off the supply voltage and ensure no voltage is present.

1 →

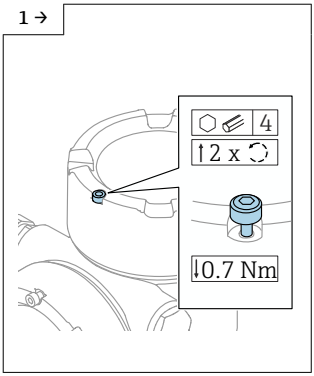

A0046831

- ▶ If fitted: release the screw of the cover lock for the display cover using the Allen key.

2 →

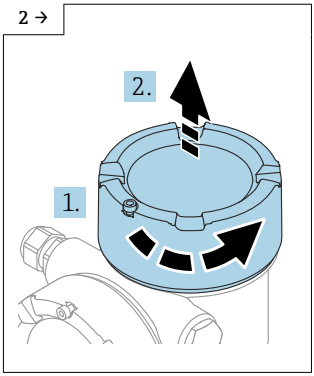

A0046832

- ▶ Unscrew the display cover and check the cover seal.

3 →

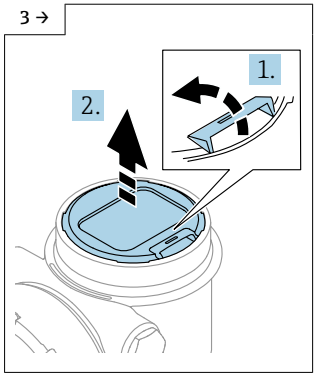

A0046833

- ▶ Press the release mechanism, remove the display module.

4 →

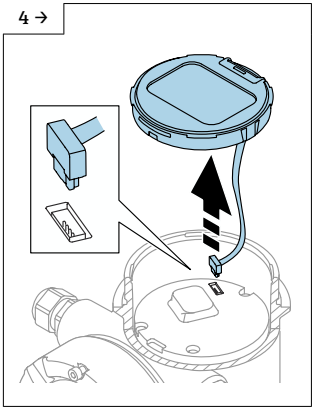

A0046834

- Release the plug connection.

5 →

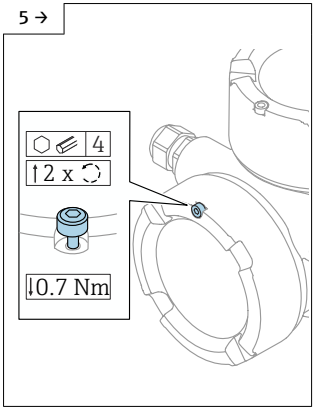

A0046923

- If fitted: release the screw of the cover lock for the connection compartment cover using the Allen key.

6 →

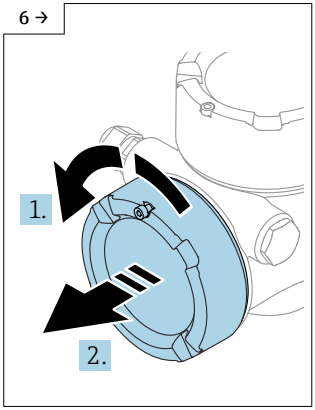

A0046924

- Unscrew the connection compartment cover, check the cover seal. Screw this cover onto the electronics compartment instead of the display cover. If fitted: tighten the screw of the cover lock using the Allen key

7 →

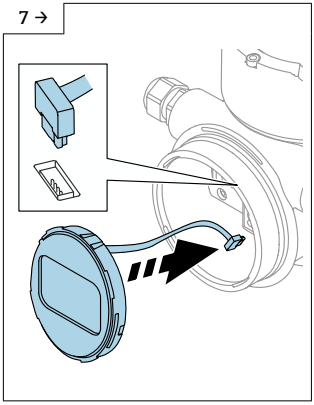

A0048406

- Plug in the connection for the display module in the connection compartment.
- Insert the display module into the desired position until it clicks into place.

8

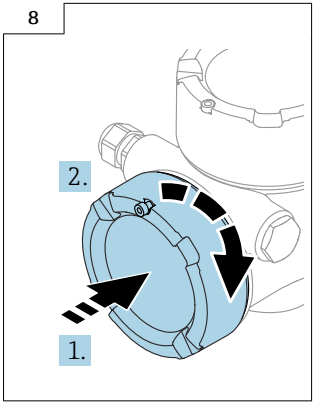

A0046928

- Screw the display cover firmly back onto the housing. If fitted: tighten the screw of the cover lock using the Allen key 0.7 Nm (0.52 lbf ft).

6 Electrical connection

6.1 Connecting requirements

6.1.1 Cover with securing screw

The cover is locked by a securing screw in devices for use in hazardous areas with certain explosion protection.

NOTICE

If the securing screw is not positioned correctly, the cover cannot provide secure sealing.

- ▶ Open the cover: slacken the screw of the cover lock with a maximum of 2 turns so that the screw does not fall out. Fit the cover and check the cover seal.
- ▶ Close the cover: screw the cover securely onto the housing, making sure that the securing screw is positioned correctly. There should not be any gap between the cover and housing.

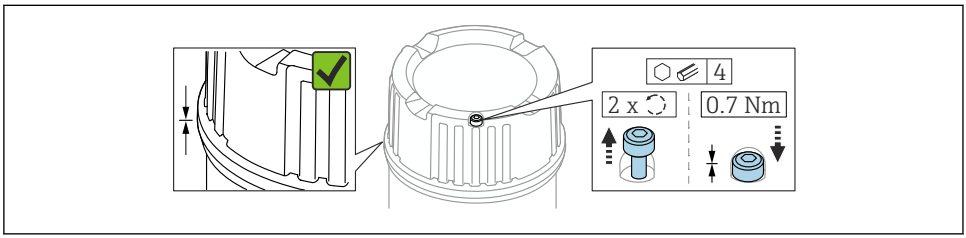

15 *Cover with securing screw*

6.1.2 Potential equalization

WARNING

Ignitable sparks or excessively high surface temperatures.

Explosion hazard!

- ▶ Please refer to the separate documentation on applications in hazardous areas for the safety instructions.

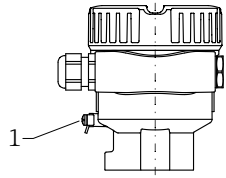

A0045830

1 Ground terminal for connecting the potential matching line (example)

If necessary, the potential matching line can be connected to the external ground terminal of the transmitter before the device is connected.

For optimum electromagnetic compatibility:
- Potential matching line as short as possible
- Observe a cross-section of at least 2.5 mm^2 (14 AWG)

6.2 Connecting the device

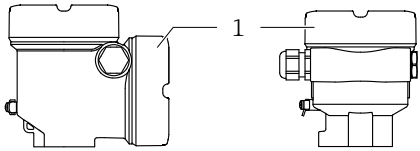

A0046355

1 Connection compartment cover

Housing thread
The threads of the electronics and connection compartment can be coated with an anti-friction coating.
The following applies for all housing materials:
Do not lubricate the housing threads.

6.2.1 Supply voltage

APL power class A (DC 9.6 to 15 V 540 mW)

The APL field switch must be tested to ensure it meets safety requirements (e.g., PELV, SELV, Class 2) and must comply with the relevant protocol specifications.

6.2.2 Terminals

- Supply voltage and internal ground terminal: 0.5 to 2.5 mm^2 (20 to 14 AWG)
- External ground terminal: 0.5 to 4 mm^2 (20 to 12 AWG)

6.2.3 Cable specification

The cable outer diameter depends on the cable entry used.
Cable outer diameter:
- Coupling, plastic: Ø5 to 10 mm (0.2 to 0.38 in)
- Coupling, nickel-plated brass: Ø7 to 10.5 mm (0.28 to 0.41 in)
- Coupling, stainless steel: Ø7 to 12 mm (0.28 to 0.47 in)

Reference cable type

The reference cable type for APL segments is fieldbus cable type A, MAU type 1 and 3 (specified in IEC 61158-2). This cable meets the requirements for intrinsically safe applications according to IEC TS 60079-47 and can also be used in non-intrinsically safe applications.

Cable type	A
Cable capacitance	45 to 200 nF/km
Loop resistance	15 to 150 Ω/km
Cable inductance	0.4 to 1 mH/km

Further details are provided in the Ethernet-APL Engineering Guideline (https://www.ethernet-apl.org).

6.2.4 Overvoltage protection

Devices without optional overvoltage protection

Equipment from Endress+Hauser fulfills the requirements of the product standard IEC 61326-1 (Table 2 Industrial Environment).

Depending on the type of connection (DC power supply, input line, output line) and in accordance with IEC 6132 6-1, different test levels are used to prevent transient overvoltages (IEC 61000-4-5 Surge): Test level for DC power supply lines and IO lines: 1 000-V-wire to ground

Devices with optional overvoltage protection

- Spark-over voltage: min. DC 400 V
- Tested in accordance with:
  - IEC 60079-14 Subsection 12.3
  - IEC 60060-1 Section 7
- Nominal discharge current: 10 kA

NOTICE

The device can be damaged by excessively high electrical voltages.

▶ Always ground the device with integrated overvoltage protection.

Overvoltage category

Overvoltage category II

6.2.5 Wiring

⚠ WARNING

Supply voltage might be connected!

Risk of electric shock and/or explosion!

- ▶ If the device is used in hazardous areas, make sure to comply with national standards and the specifications in the Safety Instructions (XAs). The specified cable gland must be used.
- ▶ The supply voltage must match the specifications on the nameplate.
- ▶ Switch off the supply voltage before connecting the device.
- ▶ If necessary, the potential matching line can be connected to the outer ground terminal of the transmitter before the device is connected.
- ▶ A suitable circuit breaker should be provided for the device in accordance with IEC 61010.
- ▶ The cables must be adequately insulated, with due consideration given to the supply voltage and the overvoltage category.
- ▶ The connecting cables must offer adequate temperature stability, with due consideration given to the ambient temperature.
- ▶ Only operate the device with the covers closed.

1. De-energize the system.
2. Release the cover lock (if provided).
3. Unscrew the cover.
4. Guide the cables into the cable glands or cable entries. Use a suitable tool with width across flats AF24/25 (8 Nm (5.9 lbf ft)) for the M20 cable gland.
5. Connect the cables.
6. Tighten the cable glands or cable entries so that they are leak-tight. Counter-tighten the housing entry.
7. Screw the cover securely back onto the connection compartment.
8. If provided: tighten the screw of the cover lock using the Allen key 0.7 Nm (0.52 lbf ft) ±0.2 Nm (0.15 lbf ft).

6.2.6 Terminal assignment

Single compartment housing

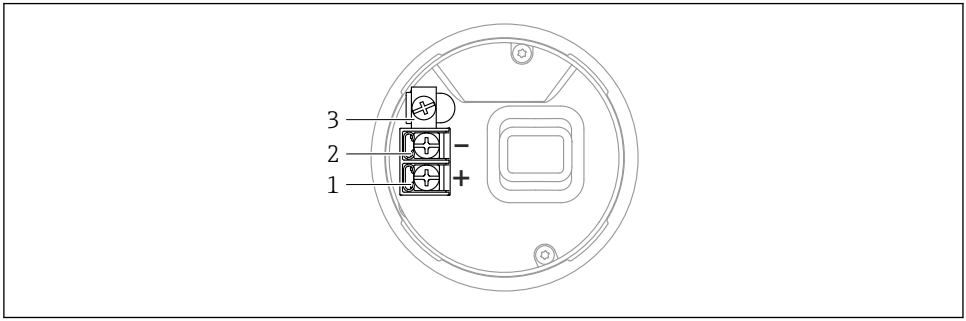

A0042594

16 *Connection terminals and ground terminal in the connection compartment, single compartment housing*

1 *Positive terminal*
2 *Negative terminal*
3 *Internal ground terminal*

Dual-compartment housing, L-form

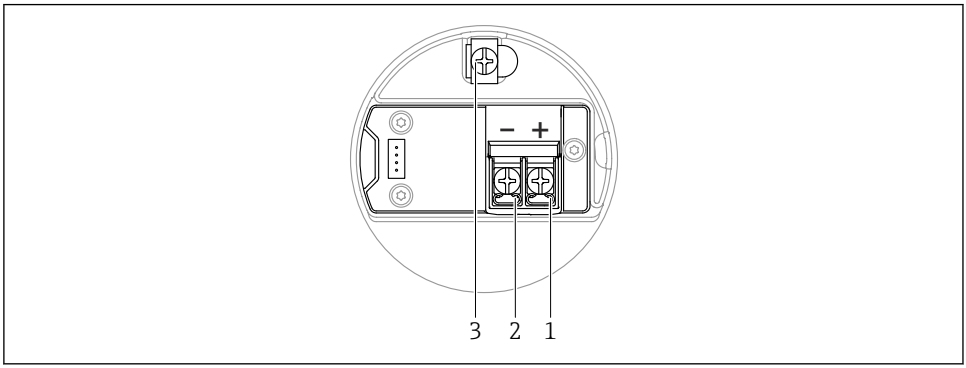

A0045842

17 *Connection terminals and ground terminal in the connection compartment, dual-compartment housing, L-form*

1 *Plus terminal*
2 *Minus terminal*
3 *Internal ground terminal*

6.2.7 Cable entries

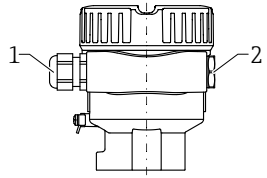

A0045831

18 Example

1 Cable entry
2 Blind plug

The type of cable entry depends on the device version ordered.

6.2.8 Available device plugs

In the case of devices with a plug, it is not necessary to open the housing for connection purposes.

Use the enclosed seals to prevent the penetration of moisture into the device.

Various M12 sockets are available as accessories for devices with M12 plugs.

For more details, see the "Accessories" section.

M12 plug

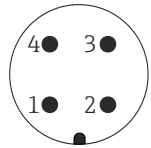

A0011175

19 View of the connection on the device

1 APL signal -
2 Ethernet-APL signal +
3 Shielding
4 Not used

6.3 Ensuring the degree of protection

6.3.1 Degree of protection

Testing according to IEC 60529 and NEMA 250

IP68 test condition: 1.83 m H_2O for 24 h

Housing
See cable entries

Cable entries
- M20 coupling, plastic, IP66/68 NEMA Type 4X/6P
- M20 coupling, nickel-plated brass, IP66/68 NEMA Type 4X/6P
- M20 coupling, 316L, IP66/68 NEMA Type 4X/6P
- M20 thread, IP66/68 NEMA Type 4X/6P
- G ½ thread, NPT ½ , IP66/68 NEMA Type 4X/6P

Degree of protection for M12 plug
- When housing is closed and connecting cable is plugged in: IP66/67 NEMA Type 4X
- When housing is open or connecting cable is not plugged in: IP20, NEMA Type 1

NOTICE

M12 plug: Loss of IP protection class due to incorrect installation!
- ▶ The degree of protection only applies if the connecting cable used is plugged in and screwed tight.
- ▶ The degree of protection only applies if the connecting cable used is specified according to IP67 NEMA Type 4X.

If the "M12 plug" option is selected as the electrical connection, **IP66/67 NEMA Type 4X** applies for all housing types.

7 Operation options

For additional information about the connection, see the Operating Instructions for the device. Documentation currently available on the Endress+Hauser- website: www.endress.com → Downloads.

7.1 Overview of operation options

- Operation via operating key and DIP switches on the electronic insert
- Operation via optical operating keys on the device display (optional)
- Operation via Bluetooth® wireless technology (with optional device display, including Bluetooth® wireless technology) with SmartBlue app, Field Xpert or DeviceCare
- Operation via web server
- Operation via operating tool (Endress+Hauser FieldCare/DeviceCare) or FDI Hosts (e.g., PDM)

7.2 Electronic insert (FEL60P) - Ethernet-APL

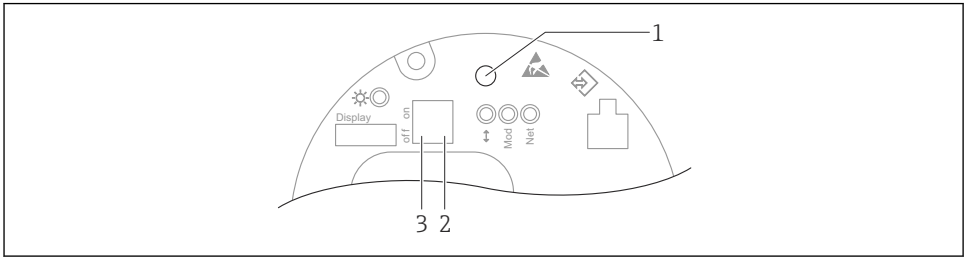

A0046061

20 Operating key and DIP switches on the electronic insert (FEL60P) - Ethernet-APL

1 Operating key for Reset password and Reset device
2 DIP switch for setting the service IP address
3 DIP switch for locking and unlocking the device

The setting of the DIP switches on the electronic insert has priority over the settings made via other operation methods (e.g. FieldCare/DeviceCare).

7.3 Access to operating menu via local display

7.3.1 Device display (optional)

Possible to operate the optical operating keys through the cover. No need to open the device.

Backlighting is switched on or off depending on the supply voltage and the current consumption.

The device display is optionally available with Bluetooth® wireless technology.

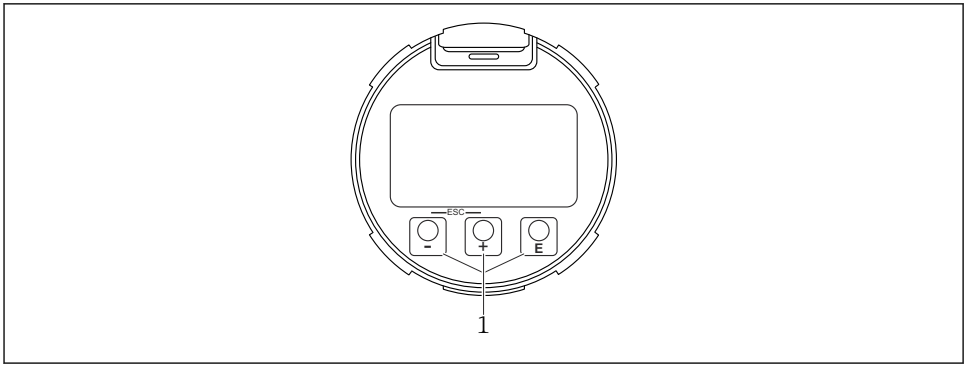

A0039284

21 Graphic display with optical operating keys (1)

7.3.2 Operation via Bluetooth® wireless technology (optional)

Prerequisite
- Device with device display including Bluetooth® wireless technology
- Smartphone or tablet with Endress+Hauser SmartBlue app or PC with DeviceCare from version 1.07.05 or Field Xpert SMT70

The connection has a range of up to 25 m (82 ft). The range can vary depending on environmental conditions such as attachments, walls or ceilings.

The operating keys on the display are locked as soon as a Bluetooth® connection is established.

An available Bluetooth® connection is indicated by a flashing Bluetooth symbol.

If the Bluetooth® display is removed from one device and installed in another device.
- All login data are stored only in the Bluetooth® display and not in the device.
- The password changed by the user is also stored in the Bluetooth® display.

Special Documentation SD02530P

7.3.3 Operation via the SmartBlue app

The device can be operated and configured with the SmartBlue App.

- The SmartBlue app must be downloaded onto a mobile device for this purpose.
- For information on the compatibility of the SmartBlue app with mobile devices, see **Apple App Store (iOS devices)** or **Google Play Store (Android devices)**
- Incorrect operation by unauthorized persons is prevented by means of encrypted communication and password encryption.
- The Bluetooth® function can be deactivated after initial device setup.

ANDROID APP ON Google Play

Download on the App Store

A0033202

22 QR code for free Endress+Hauser SmartBlue App

Download and installation:

1. Scan the QR code or enter **SmartBlue** in the search field of the Apple App Store (iOS) or Google Play Store (Android).
2. Install and start the SmartBlue app.
3. For Android devices: enable location tracking (GPS) (not required for iOS devices).
4. Select a device that is ready to receive from the device list displayed.

Login:

1. Enter the user name: admin
2. Enter the initial password: serial number of the device
3. Change the password after logging in for the first time

7.4 Access to the operating menu via the web browser

7.4.1 Function scope

Thanks to the integrated Web server the device can be operated and configured via a Web browser. The structure of the operating menu is the same as for the local display. In addition to the measured values, device status information is also displayed and allows users to monitor the status of the device. Furthermore the device data can be managed and the network parameters can be configured.

7.4.2 Requirements

Computer software

Recommended operating systems

- Microsoft Windows 7 or higher.
- Mobile operating systems:
  - iOS
  - Android

Microsoft Windows XP is supported.

Web browsers supported

Currently available web browsers:
- Microsoft Edge
- Mozilla Firefox
- Google Chrome
- Safari

Computer settings

User rights

Corresponding user rights (e.g. administrator rights) for TCP/IP and proxy server settings are required (for changing the IP address, subnet mask etc.).

Proxy server settings of the web browser

The web browser *Use proxy server for LAN* setting must be **disabled**.

JavaScript

JavaScript must be enabled.

When installing a new firmware version: To enable correct data display, clear the temporary memory (cache) of the web browser under **Internet options**.

7.4.3 Establishing a connection

Via PROFINET over Ethernet-APL network

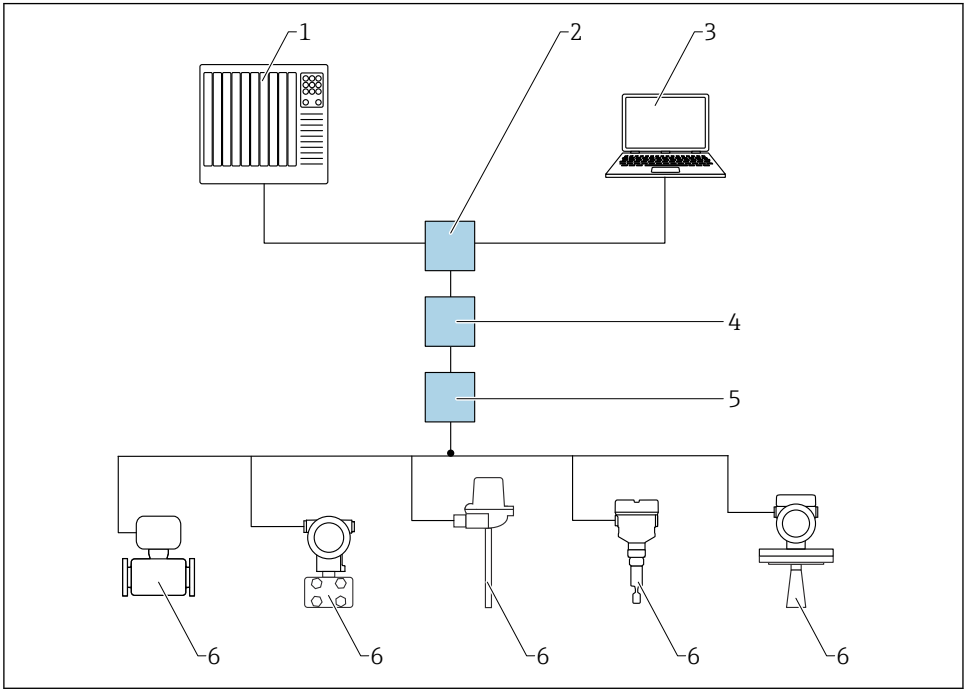

23 Options for remote operation via PROFINET over Ethernet-APL network: star topology

1 *Automation system, e.g. Simatic S7 (Siemens)*
2 *Ethernet switch*
3 *Computer with web browser (e.g., Microsoft Edge) for accessing the integrated device web server or computer with operating tool (e.g. FieldCare, DeviceCare, SIMATIC PDM) with iDTM PROFINET Communication*
4 *APL power switch (optional)*
5 *APL field switch*
6 *APL field device*

Call up the website via the computer in the network. The IP address of the device must be known.

The IP address can be assigned to the device in a variety of ways:

- Dynamic Configuration Protocol (DCP), factory setting
  The IP address is automatically assigned to the device by the automation system (e.g. Siemens S7)
- Software addressing
  The IP address is entered via the **IP address** parameter
- DIP switch for service
  The device then has the fixed assigned IP address IP address 192.168.1.212
  ℹ The IP address is only adopted after a restart.
  The IP address can now be used to establish the network connection

The default setting is that the device uses the Dynamic Configuration Protocol (DCP). The device's IP address is automatically assigned by the automation system (e.g. Siemens S7).

Starting the Web browser and logging in

1. Start the web browser on the computer.
2. Enter the device's IP address in the address line of the web browser.
   ↳ The login page appears.

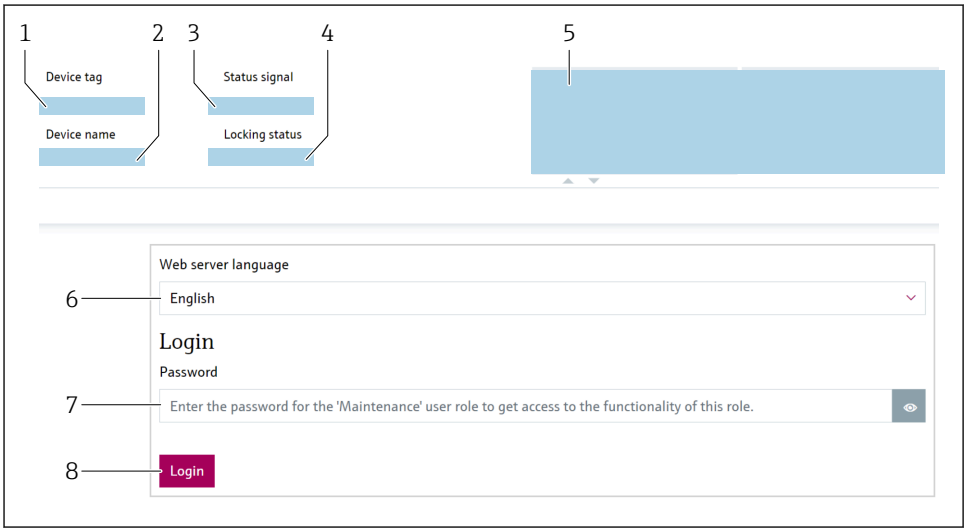

24 *Web browser login*

1 *Device tag*
2 *Device name*
3 *Status signal*
4 *Locking status*
5 *Current measured values*
6 *Select the language*
7 *Enter the "Password" parameter*
8 *Login*

1. Select the preferred **Language** parameter for the web browser.
2. Enter the **Password** parameter (factory setting 0000).
3. Confirm entry with Login.

7.4.4 Operator interface

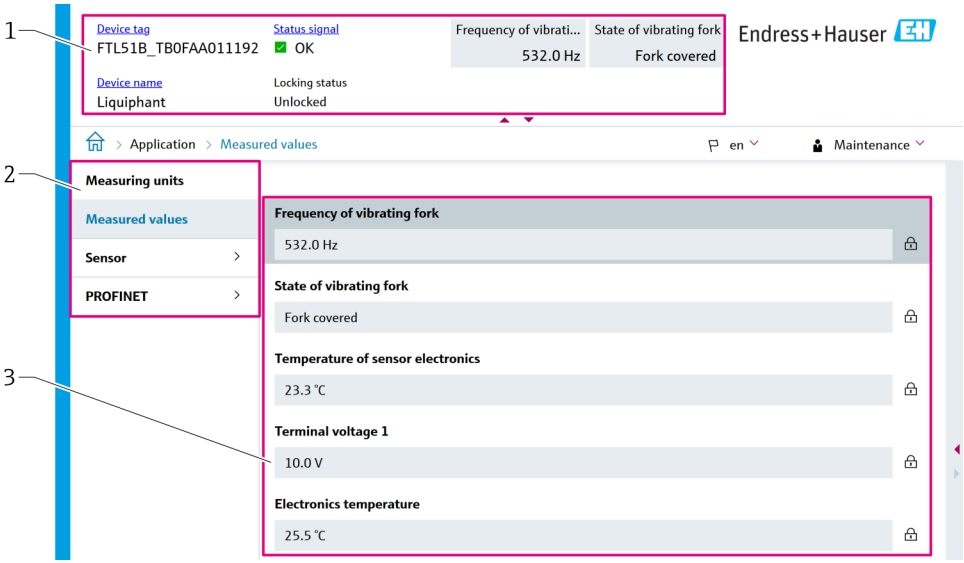

25 User interface with sample contents

1 System header
2 Navigation area
3 Work area

System header

The following information appears in the header:
- Device tag
- Device name
- Status signal
- Locking status
- Current measured values

Navigation area

If a function is selected in the function bar, the submenus of the function open in the navigation area. The user can now navigate within the menu structure.

Work area

Depending on the selected function and the related submenus, various actions can be performed in this area:
- Configuring parameters
- Reading measured values
- Calling up help texts

Adopting a value

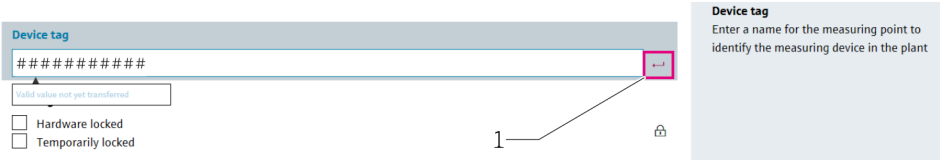

26 Example of Enter button

1 Enter button in the operating tool

The value entered is only adopted by pressing the Enter key or clicking on the Enter button (1).

7.4.5 Disabling the Web server

The web server of the device can be switched on and off as required using the **Web server functionality** parameter.

Navigation

"System" menu → Connectivity → Interfaces

Parameter overview with brief description

Parameter	Description	Selection
Web server functionality	Switch web server on and off, switch off HTML.	▪ Disable ▪ Enable

Function range of "Web server functionality" parameter

Option	Description
Disable	▪ The web server is completely disabled. ▪ Port 80 is locked.
Enable	▪ The complete web server functionality is available. ▪ JavaScript is used. ▪ The password is transferred in an encrypted state. ▪ Any change to the password is also transferred in an encrypted state.

Enabling the web server

If the web server is disabled, it can only be re-enabled with the **Web server functionality** parameter via the following operating options:
- Via local display
- Via the "FieldCare" operating tool
- Via the "DeviceCare" operating tool
- Via FDI hosts
- Via the PROFINET startup record

7.4.6 Logging out

1. Select the **Logout** entry in the function bar.
   ↳ The home page with the Login box appears.
2. Close the Web browser.

Once communication with the Web server is established via the standard IP address 192.168.1.212, the DIP switch must be reset (from **ON** → **OFF**). Following a reboot, the configured IP address of the device is once again active for network communication.

7.5 Access to the operating menu via the operating tool

For additional information, see Operating Instructions.

8 Commissioning

All configuration tools provide a commissioning assistant that supports the user when setting the most important configuration parameters (**Guidance** menu **Commissioning** wizard).

8.1 Preliminaries

The measuring range and the unit in which the measured value is transmitted correspond to the data on the nameplate.

8.2 Configuring the operating language

8.2.1 Local display

Configuring the language of the local display

1. Press the E key for at least 2 s.
   ↳ A dialog box appears.
2. Unlock the display operation.
3. Select the **Language** parameter in the main menu.
4. Press the E key.

5. Select the desired language with the ⊞ key.
6. Press the E key.

Display operation locks automatically (except in the **Safety mode** wizard):
- after 1 min on the main page if no key has been pressed
- after 10 min within the operating menu if no key has been pressed

8.2.2 Operating tool

Set display language

Navigation: System → Display → Language

Selection in **Language** parameter; Visibility depends on order options or device settings

8.2.3 Web server

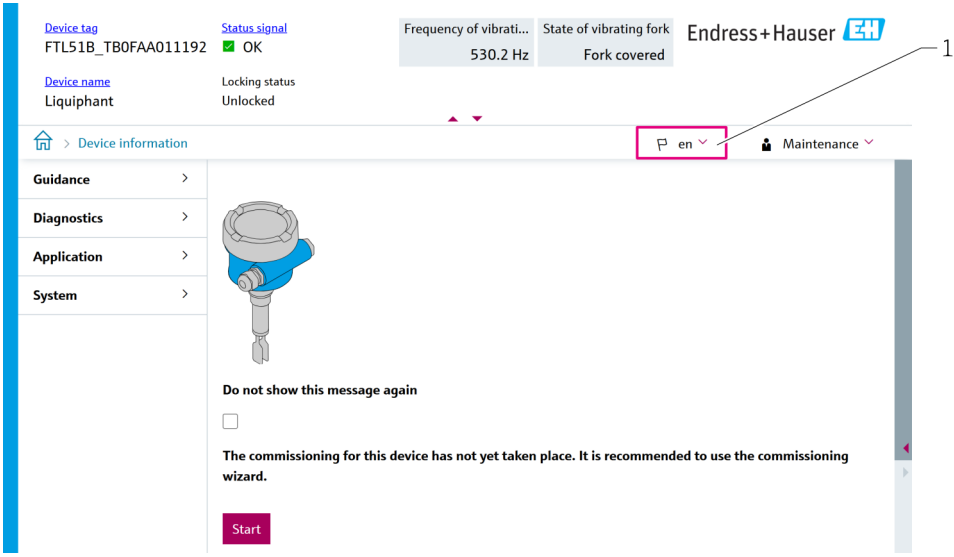

1 Language setting

8.3 Configuring the device

8.3.1 Commissioning with "Commissioning" wizard

In the web server, SmartBlue and on the display, the **Commissioning** wizard is available to guide the user through the initial commissioning steps.

1. Connect the device to the Web server.
2. Open the device in the Web server.
   ↳ The dashboard (homepage) of the device is displayed:

3. In the **Guidance** menu, click the **Commissioning** wizard to open the wizard.
4. Enter the appropriate value in each parameter or select the appropriate option. These values are written directly to the device.
5. Click "Next" to go to the next page.
6. Once all the pages have been completed, click "End" to close the **Commissioning** wizard.

71783254

www.addresses.endress.com

Endress+Hauser

People for Process Automation