XA03548C/07/EN/01.25-00
71706095
2025-05-12

Safety Instructions
Liquiline CM442, CM444, CM448, CM442R, CM444R, CM448R, CM44P

Universal four-wire multichannel controller

EAC Ex [Ex ia Ga] IIC

Endress+Hauser
People for Process Automation

Liquiline CM442, CM444, CM448, CM442R, CM444R, CM448R, CM44P

Universal four-wire multichannel controller

Table of contents

Associated documentation 4
Additional documentation 4
Certificates and declarations 4
Identification 4
Safety instructions 6
Temperature tables 7
Connection 8

Associated documentation

This document is an integral part of Operating Instructions BA00444C, BA01225C, BA01570C and BA01954C.

Additional documentation

Competence Brochure CP00021Z
- Explosion Protection: Guidelines and General Principles
- www.endress.com

Certificates and declarations

The certificates and declarations of conformity are available in the Downloads area of the Endress+Hauser website:

www.endress.com/download

Applied standards

TR CU 012/2011

Identification

The nameplate provides you with the following information on your device:
- Manufacturer identification
- Order code
- Extended order code
- Serial number
- Firmware version
- Ambient conditions
- Input and output values
- Activation codes
- Safety information and warnings
- Protection class
- Ex markings
- Certificate number

▶ Compare the information on the nameplate with the order.

Type code

EAC Ex

Type		010	020	030	040	050	060	070		≥500
CM442	-	**	**	**	**	*	*	*	+	*
CM442 R	-	**	**	**	**	*	-	-	+	*

Feature		Option	
010	Approval	GE	EAC Ex [Ex ia Ga] IIC
020	Sensor input	M2	2x digital sensor
030	Communication	All	Exclusions apply [1)]
040	Additional features	F0	W/o
050	Power supply	All	All options certified
060	Cable entry housing	All	All options certified
070	Cable entry set	All	All options certified
≥500	Optional Features		
620	Additional approval	All	All options certified

Feature		Option	
650	Edge connectivity	All	All options certified
670	Accessory mounted	NC	CDI; female jack external

1) Please note: exclusions may apply. See configurator for more information.

Type		010	020	025	030	040	050	060	065	070		≥500
CM444	-	**	**	*	**	**	*	*	**	*	+	*
CM444R	-	**	**	*	**	**	*	-	-	-	+	*

Feature		Option	
010	Approval	GE	EAC Ex [Ex ia Ga] IIC
020	Sensor input	M2	2x digital sensor
		M4	4x digital sensor
025	Digital communication	All	All options certified
030	Analogue output	All	All options certified
040	Additional features	All	All options certified
050	Power supply	All	All options certified
060	Cable entry housing	All	All options certified
065	Female jack fieldbus communication	All	All options certified
070	Cable entry set	All	All options certified
≥500	Optional Features		
590	Additional approval	All	All options certified
610	Accessory mounted	NC	CDI; female jack external
650	Edge connectivity	All	All options certified

Type		010	020	025	050	060	065	070		≥500
CM448	-	**	*	***	*	**	**	*	+	*
CM448R	-	**	*	***	*	-	-	-	+	*

Feature		Option	
010	Approval	GE	EAC Ex [Ex ia Ga] IIC
020	Digital communication	M2	All options certified
025	Digital sensor; output; input	All	Exclusions apply [1)]
050	Power supply	All	All options certified
060	Cable entry housing, sensor	All	Exclusions apply [1)]
065	Female jack fieldbus communication	All	All options certified
070	Cable entry set+female jack	All	All options certified
≥500	Optional Features		
590	Additional approval	All	All options certified

Feature		Option	
610	Accessory mounted	NC	CDI; female jack external
650	Edge connectivity	All	All options certified

1) Please note: exclusions may apply. See configurator for more information.

Type		010	012	015	020	025	030	040	050	060	065	070	080		≥500
CM44P	-	**	***	**	**	*	**	**	*	*	**	*	*	+	*

Feature		Option	
010	Approval	GE	EAC Ex [Ex ia Ga] IIC
012	Housing	All	All options certified
015	Optical sensor input	All	All options certified
020	Sensor input	M2	2x digital sensor
		M4	4x digital sensor
025	Digital communication	All	All options certified
030	Analogue output	All	Exclusions apply [1]
040	Additional features	All	All options certified
050	Power supply	All	All options certified
060	Cable entry housing	All	All options certified
065	Female jack fieldbus communication	All	All options certified
070	Cable entry set	All	All options certified
080	Calibration	All	
≥500	Optional Features		
610	Accessory mounted	NC	CDI; female jack external
650	Edge connectivity	All	All options certified

1) Please note: exclusions may apply. See configurator for more information.

Certificates and approvals

Ex approval

EAC Ex

CM442, CM444, CM448, CM442R, CM444R, CM448R, CM44P

EAC Ex [Ex ia Ga] IIC
Certificate number: EAЭC KZ 7500525.01.01.01921

The product has been certified in accordance with Directive TR CU 012/2011 valid within the Eurasian Economic Area (EAEU). The EAC conformity mark has been affixed to the product.

Name of the certification body

ТОО/ЖШС "Т-Стандарт"

Safety instructions

The 2DS Ex-i module and its integration into the Liquiline CM442, CM444, CM448, CM442R, CM444R, CM448R and CM44P transmitter as per these Operating Instructions meets the requirements of Explosion Protection Directive TR CU 012/2011 for an associated apparatus.

The harmonized standards or normative documents that have been applied are listed in the certificate.

- The sensor communication module 2DS Ex-i in the Liquiline CM442, CM444, CM448, CM442R, CM444R, CM448R and CM44P transmitter is an associated apparatus.
- The Liquiline CM442, CM444, CM448, CM442R, CM444R, CM448R and CM44P must be set up in the non-hazardous area.
- Only an intrinsically safe electrical apparatus may be connected to the intrinsically safe digital sensor input. The input is suitable for:
  - equipment group II, equipment category 1G for use in Zone 0, with equipment protection level Ga.
  - Intrinsically safe Memosens sensors and the Memosens cable can be connected and may be located in Zone 0, 1, 2.
- Only suitable sensors may be connected and used as designated according to the Operating Instructions.
- Suitable sensors and the Memosens cable are marked by a red ring.
- The sensor communication module 2DS Ex-i may only be connected to safety extra low voltage signals (SELV) or protective extra low voltage signals (PELV).
- All circuits - apart from the mains supply circuits (power supply of device and relay connection) - that are directly connected to Liquiline CM442, CM444, CM448, CM442R, CM444R, CM448R and CM44P with an integrated sensor communication module 2DS Ex-i must be safety extra low voltage signals. They must correspond to SELV or PELV circuits or the directly connected devices must correspond to IEC 60950 series, IEC 61010-1 or a technically equivalent standard.
- The ambient temperature range for the sensor communication module 2DS Ex-i must be observed in accordance with the specifications in the temperature tables.
- The transmitter may only be used for fixed installations. The cables must be strain-relieved and securely connected.
- Secure the cable glands so that they do not become loose and fit the seals directly on the housing. Ensure that the cable glands and cable entries are leak-tight. To ensure leak-tight fastening, the cable gland and the cable nuts must be tightened with a torque of 2 Nm after the cables have been routed through the gland.
- Pay attention to the information in the Operating Instructions regarding the nominal values of the input and output circuits.
- The device configuration and hardware may not be modified as this would invalidate the explosion protection. Every change puts safety at risk and results in loss of Ex-approval. This applies for all modules of the transmitter, including the non-intrinsically safe modules.
- Maintenance and repair work may only be performed by the manufacturer's service personnel. Only original spare parts may be used in this context.
- When connecting wires to the modules, it is important to ensure that the intrinsically safe and non-intrinsically safe terminals are at least 50 mm apart (tight string length). For this purpose, the separator element that guarantees the necessary spacing must be integrated between the intrinsically safe and non-intrinsically safe modules and must not be removed.
- Installation, connection to the power supply, commissioning, inspection and maintenance of the devices must be performed by qualified skilled staff who are appropriately trained to perform work on Ex devices in accordance with the applicable regulations, e.g. IEC 60079-14, -17, -19. The instructions in the Operating Instructions must be strictly observed.

Temperature tables

Device / module	Ambient temperature T_a
2DS Ex-i module	-20 °C ≤ T_a ≤ +85 °C (-4 °F ≤ T_a ≤ 185 °F)
CM442-GE CM44P-GE CM444-GE CM448-GE	-20 °C ≤ T_a ≤ +50 °C [1)] (-4 °F ≤ T_a ≤ +122 °F) [1)]
CM442R-GE CM44P-GE CM444R-GE CM448R-GE	0 °C ≤ T_a ≤ +50 °C [1)] (32 °F ≤ T_a ≤ +122 °F) [1)]

1) The ambient temperature range of the Liquiline CM44x(R) transmitter with integrated 2DS Ex-i modules is lower due to the internal heating of the transmitter.

Connection

Mounting requirements

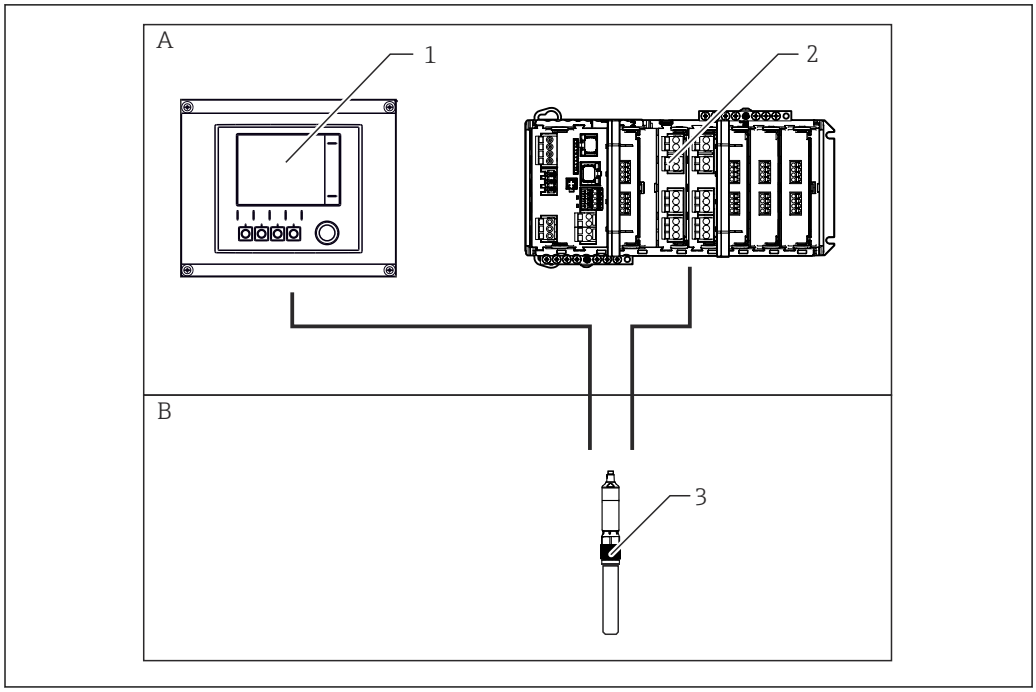

A Non-hazardous areas
B Zone 0, 1, 2
*1 Liquiline CM442, CM444, CM448, CM44P-**FIH transmitter with integrated 2DS Ex-i module*
*2 Liquiline CM442R, CM444R, CM448R, CM44P-**DIN transmitter with integrated 2DS Ex-i module*
3 Intrinsically safe devices and sensors with approval for connection to the 2DS Ex-i module

Connection data

Connection data for the sensor communication module 2DS Ex-i, which is an associated intrinsically safe electrical apparatus and integrated in Liquiline CM442, CM444, CM448, CM442R, CM444R, CM448R and CM44P.

Intrinsically safe digital input: [Ex ia IIC] (sensor communication module 2DS Ex-i module terminal 87i, 88i, 97i, 98i)	
Max. output voltage U_o	5 V
Max. output current I_o	112 mA
Max. power P_o	165 mW
Max. internal capacitance C_i	5.2 µF
Max. internal inductance L_i	0 µH
Max. external capacitance C_o	Corresponding to xYK10 [1] and CLS50D + max. 100 m cable length
Max. external inductance L_o	Corresponding to xYK10 [1] and CLS50D + max. 100 m cable length

1) x ... C or O or OC

Max. permitted voltage at non-intrinsically safe connections on the CM442, CM444, CM448, CM442R, CM444R, CM448R and CM44P	
Max. output voltage U_m	≤ 250 VAC rms

Attachable devices and cables

Only the following listed and approved devices may be connected to the digital sensor input:
- Memosens cable xYK10 [1] (with Ex-certification)
  The connection of the associated apparatus Liquiline CM442, CM444, CM448, CM442R, CM444R, CM448R, CM44P with sensor communication module 2DS Ex-i and the intrinsically safe Memosens cables xYK10 [1] is certified as a system.
- Digital Memosens sensor/ other Memosens devices
  Digital Memosens sensors and other devices that satisfy the specified electrical parameters of Liquiline CM442, CM444, CM448, CM442R, CM444R, CM448R, CM44P with sensor communication module 2DS Ex-i.
  Digital Memosens sensors/ Memosens devices except xLS50D [1] are connected to the intrinsically safe Memosens cables xYK10 [1] via an inductive interface.

The devices indicated in the following certificates, and other devices that satisfy the entity parameters indicated, can be connected to the sensor communication module 2DS Ex-i.

EAC Ex
- xYK10 [1] as per CoC EAЭC KZ 7500525.05.01.02089
- xLS50D [1] as per CoC EAЭC KZ 7500525.05.01.02089

In addition to these devices/sensors, certified intrinsically safe Memosens 2.0 sensors (e.g. CPS11E) with certified intrinsically safe Memosens cables CYK10 (max. 100 m cable length) may be connected to the Liquiline CM442, CM444, CM448, CM442R, CM444R, CM448R, CM44P with sensor communication module 2DS Ex-i.
The connected sensors must have a higher safety-related maximum input power P_i (180 mW) than the safety-related maximum output power P_o described above.
The certificate numbers of these sensors are not listed here. Please refer to the operating manual of the sensor for this information.

Module integration

General information
- Ex-certified devices may only be maintained or repaired by the manufacturer's service personnel.
- Ensure strict compliance with the applicable standards, national regulations for hazardous areas and the safety instructions in the operating manuals and certificates.
- Only use original spare parts from the manufacturer.
- When ordering spare parts, pay attention to the device designation on the nameplate. Parts can only be replaced with identical parts or parts approved for this purpose.
- The device configuration and hardware may not be modified as this would invalidate the explosion protection. Every change puts safety at risk and results in loss of Ex-approval. This applies for all modules of the transmitter, including the non-intrinsically safe modules.
- Each repair or modification to the device must be documented.

The sensor communication module 2DS Ex-i may only be integrated into the transmitter with the 2DS Ex-i module housing.

Liquiline CM442, CM442R
- One sensor communication module 2DS Ex-i can be integrated into a Liquiline CM442, CM442R transmitter.
- The separator element must be located between the non-intrinsically safe modules and the sensor communication module 2DS Ex-i. The separator element ensures a tight string length of at least 50 mm between the non-intrinsically safe terminals and the intrinsically safe terminals. The sensor communication module 2DS Ex-i must be integrated in slot 2

1) x ... C or O or OC

Liquiline CM444, CM444R, CM44P, CM448, CM448R

- Two sensor communication modules 2DS Ex-i can be integrated into a Liquiline CM444, CM444R, CM44P transmitter. Up to three sensor communication modules 2DS Ex-i can be integrated into a Liquiline CM448, CM448R transmitter. The separator element must be located between the non-intrinsically safe modules and the sensor communication module 2DS Ex-i. The separator element ensures a tight string length of at least 50 mm between the non-intrinsically safe terminals and the intrinsically safe terminals.
- The separator element is integrated between slot 4 and slot 5 irrespective of the configuration of the modules.
- The sensor communication modules 2DS Ex-i may be located in slots 5, 6, 7. If a sensor communication module 2DS Ex-i is integrated into the CM44x-transmitter, a non-intrinsically safe module may not be integrated in slot 5, 6, 7.
- Empty slots to the left of the separator element (slot 2, 3, 4) must be provided with a blanking cover.
- Empty slots to the right of the separator element (slot 5, 6, 7) must be covered with a blanking cover.

Separator element arrangement

The separator element must be installed according to the following requirements:

- When mounting the separator element, pay particular attention to ensure mechanical stability.
- For all device versions, the installation instructions for the separator element refer to the non-intrinsically safe module beside the sensor communication module 2DS Ex-i.
- The 2DS Ex-i module is first attached.
- Then the separator element is attached to the adjacent non-intrinsically safe module. The module cover must be positioned between the contour of the separator element, and the catches must be positioned between the spacers of the module cover.
- The non-intrinsically safe module with the separator element is then inserted into the slot position beside the sensor communication module 2DS Ex-i.
  Locking elements must fully snap into their starting positions.

Galvanic isolation

The sensor circuits of the sensor communication module 2DS Ex-i are isolated from all non-intrinsically safe circuits of the Liquiline CM442, CM444, CM448, CM442R, CM444R, CM448R, CM44P up to the specified maximum voltage U_m.

The two intrinsically safe sensor circuits of the sensor communication module 2DS Ex-i are isolated from ground potential with ≥ 500 VAC rms.

The two intrinsically safe sensor circuits of the sensor communication module 2DS Ex-i are not galvanically isolated from one another (see the graphic below).

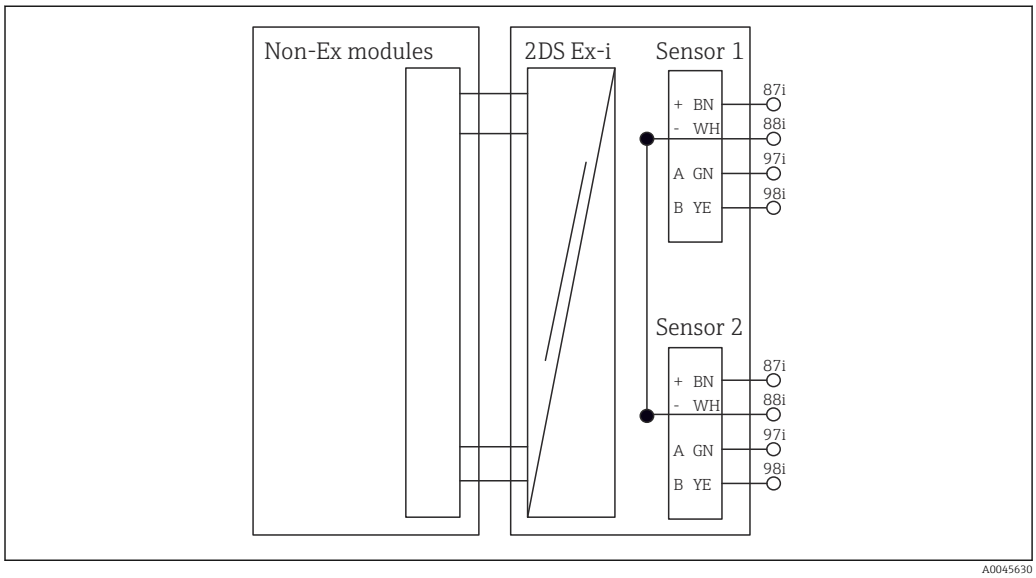

1 *U_m = 250V, [Ex ia Ga] IIC*

If the full system installation requires two intrinsically safe circuits that are isolated from one another, the two sensor circuits must be installed on two different sensor communication modules 2DS Ex-i.

Connecting sensor circuits

Intrinsically safe digital sensors may only be connected to the sensor inputs of the sensor communication module 2DS Ex-i marked in blue.

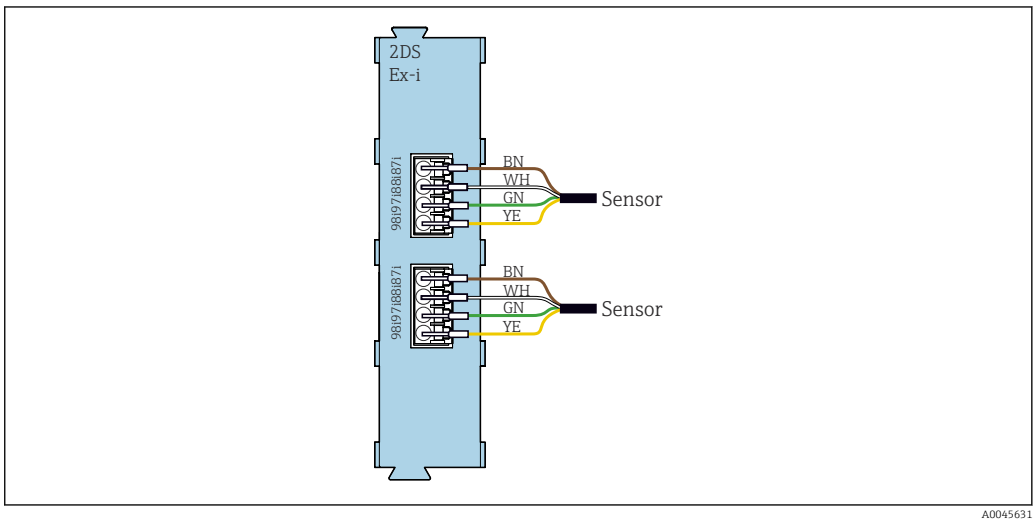

A0045631

To avoid any mix-up between intrinsically safe and non-intrinsically safe circuits, non-intrinsically safe sensors cannot be operated on a transmitter with intrinsically safe sensor circuits. The corresponding terminals are disabled.

The cable shields of the intrinsically safe sensor must be connected to ground potential at the cable mounting rail of the transmitter. There must only be one connection of the cable shield with the potential equalization system.

Intrinsically safe wiring

Intrinsically safe and non-intrinsically safe wiring of cables and connections must be established according to the separation requirements of IEC 60079-14.

The cable glands must be arranged in such a way to ensure the separation of intrinsically safe and non-intrinsically safe cables and connections. In the case of devices with a field housing, it is only permitted to use the cable glands (4, 8, B, F, G, I) for the installation of the intrinsically safe sensor circuits.

A tight string length of at least 50 mm must be observed between intrinsically safe and non-intrinsically safe terminals. This is guaranteed by the separator element.

It is recommended to route the intrinsically safe and non-intrinsically safe cables in two different directions to ensure the optimum separation of the circuits.

The Liquiline CM442, CM444, CM448, CM442R, CM444R, CM448R, CM44P offers two separate terminal strips for ground connections. They can be used to separate the cable shields of the intrinsically safe circuits and the cable shields of the non-intrinsically safe circuits.

CM442, CM444, CM448, CM44P-GEFIH

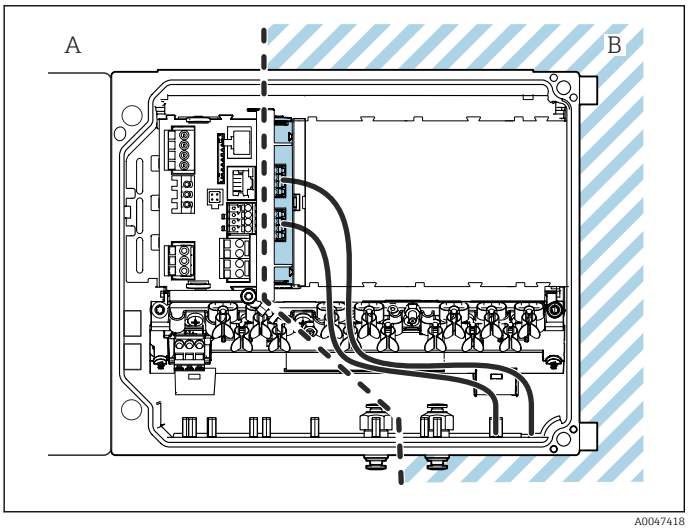

2 Device open (CM442)

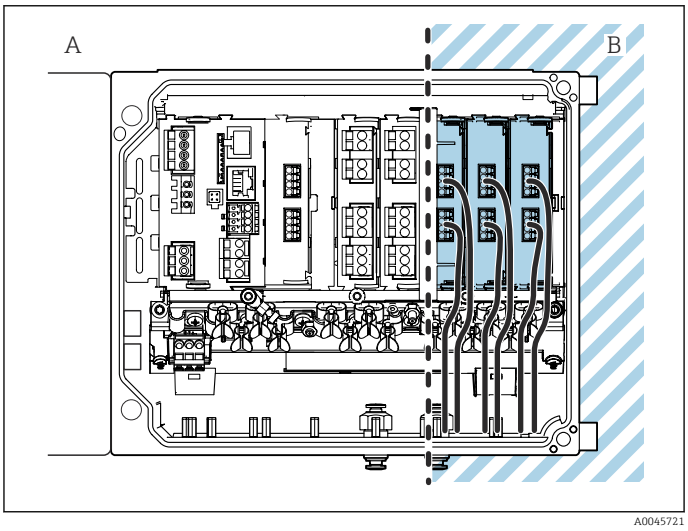

3 Device open (CM444, CM448, CM44P-GEFIH)

A: Non-intrinsically safe wiring
B: Intrinsically safe wiring of sensor communication module 2DS Ex-i

Cable entries CM442, CM444, CM448, CM44P-GEFIH

Identification of the cable entry on housing base	Suitable gland	
B, C, H, I, 1-8	M16x1.5 mm/NPT3/8"/G3/8	
A, D, F, G	M20x1.5 mm/NPT1/2"/G1/2	
E	-	
⏚	M12x1.5 mm	
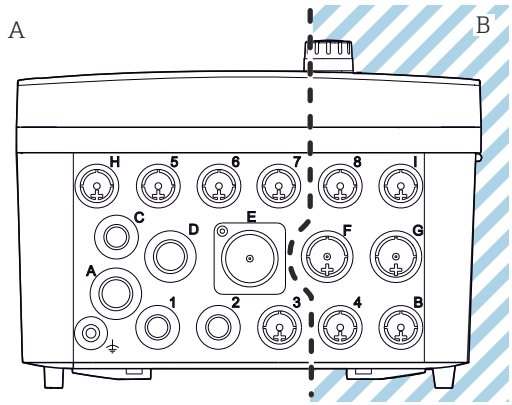 *4 A: Non-hazardous area, B: Hazardous area*	**Recommended assignment**	
	1/2/3 5/6/7	Do not use
	4/8 B/F/G/I	Intrinsically safe sensors
	A	Power supply
	C	RS485 Out or M12 Ethernet
	D	Current outputs and inputs, relays
	H	RS485 In or M12 DP/RS485
	E	Do not use

Do not cross cables for the non-hazardous area and the hazardous area in the housing. Select a suitable cable entry for the connection.

CM442R, CM444R, CM448R, CM44P-GEDIN

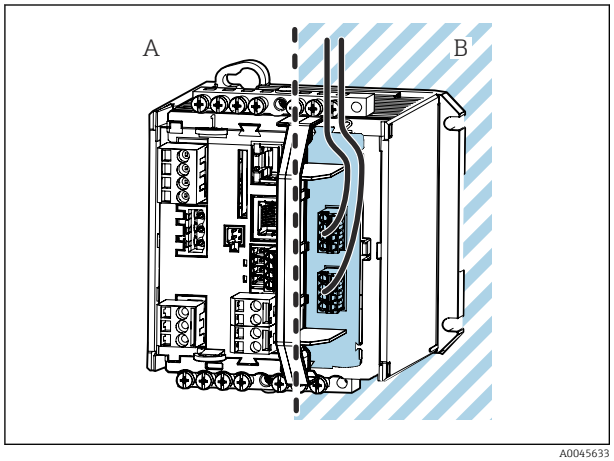

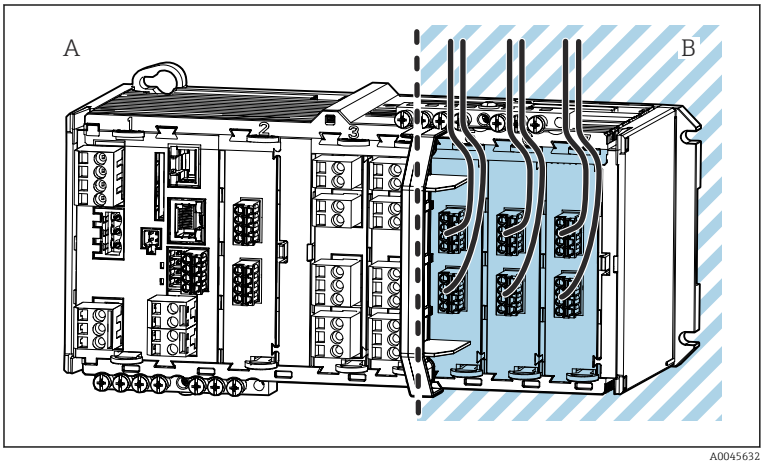

A: Non-intrinsically safe wiring
B: Intrinsically safe wiring of sensor communication module 2DS Ex-i

71706095

www.addresses.endress.com

Endress+Hauser

People for Process Automation