BA02593F/00/EN/05.26-00
71783291
2026-09-11

Valid as of version
01.00.zz (Device software)

Operating Instructions
Liquiphant FTL51B Density with Density Calculator QML51

Vibronic
Density measurement for liquids

Endress+Hauser
People for Process Automation

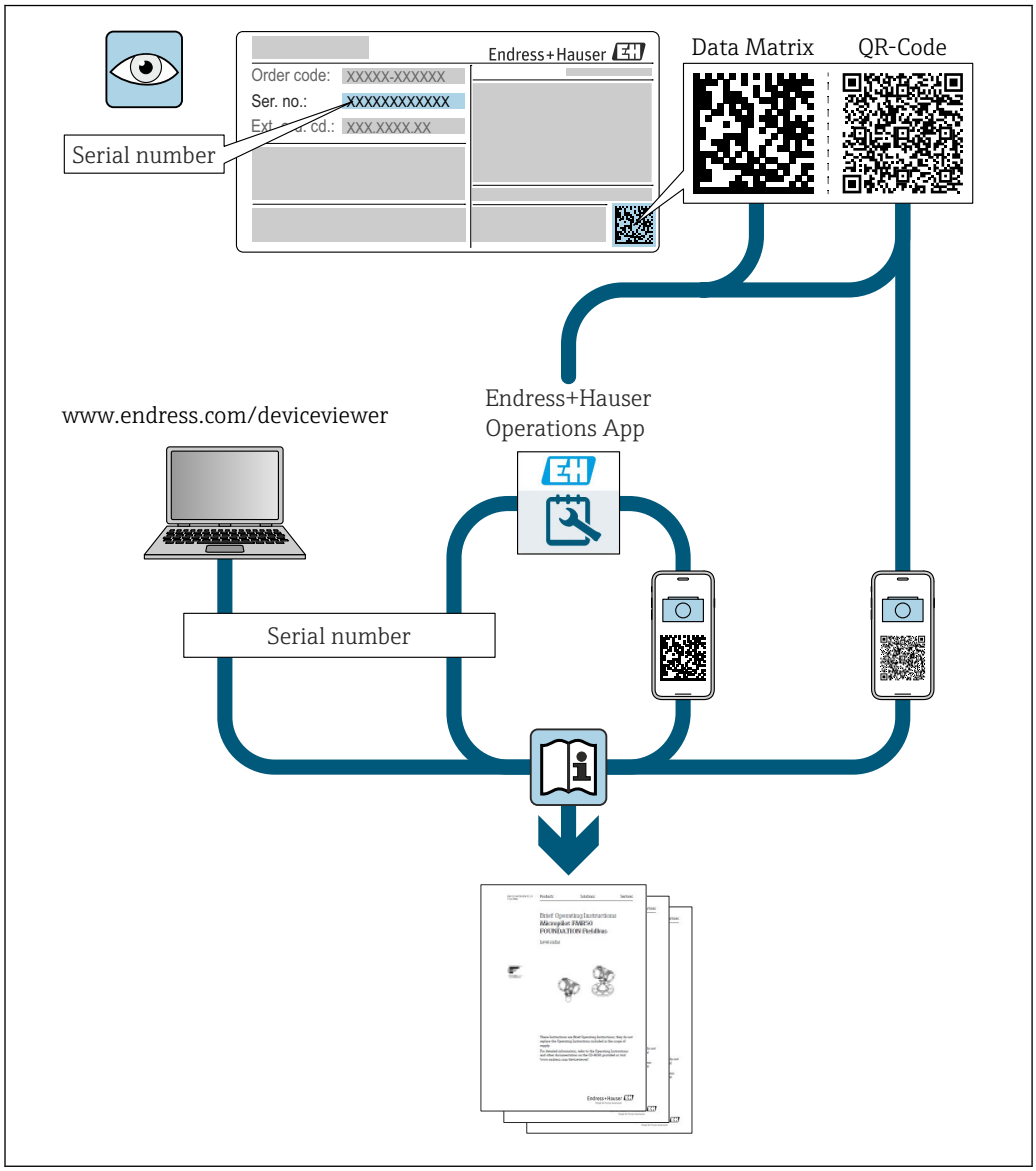

- Make sure the document is stored in a safe place such that it is always available when working on or with the device
- Avoid danger to individuals or the facility: read the "Basic safety instructions" section carefully, as well as all other safety instructions in the document that are specific to working procedures

The manufacturer reserves the right to modify technical data without prior notice. The Endress+Hauser sales organization will supply you with current information and updates to these instructions.

Table of contents

1 About this document 5
1.1 Document function 5
1.2 Symbols 5
1.2.1 Safety symbols 5
1.2.2 Electrical symbols 5
1.2.3 Tool symbols 5
1.2.4 Symbols for certain types of information 5
1.2.5 Symbols in graphics 6
1.3 Documentation 6
1.4 Registered trademarks 7

2 Basic safety instructions 7
2.1 Requirements for the personnel 7
2.2 Intended use 7
2.3 Workplace safety 8
2.4 Operational safety 8
2.5 Product safety 9
2.6 IT security 9

3 Product description 9
3.1 Measuring principle 9
3.2 Measuring system 10
3.3 Product design 11

4 Incoming acceptance and product identification 11
4.1 Incoming acceptance 11
4.2 Product identification 12
4.2.1 Nameplate 12
4.2.2 Manufacturer address 12
4.3 Storage and transport 12
4.3.1 Storage conditions 12
4.3.2 Transporting the device 13

5 Installation 13
5.1 Installation requirements 13
5.1.1 Flow velocity - Installation in piping . 14
5.1.2 Inlet and outlet runs 15
5.1.3 Correction factor 16
5.1.4 Preventing buildup 18
5.1.5 Take clearance into consideration . . . 18
5.1.6 Support the device 18
5.1.7 Weld-in adapter with leakage hole . . 19
5.2 Installing the device 19
5.2.1 Required tool 19
5.2.2 Installation 19
5.3 Sliding sleeves 22
5.4 Post-mounting check 22

6 Electrical connection 22
6.1 Connecting requirements 22
6.1.1 Cover with securing screw 22
6.1.2 Connecting protective earth (PE) 23
6.2 Connecting the device 23
6.2.1 2-wire density (electronic insert FEL60D) for density measurement . . . 23
6.2.2 Connecting the cable 26
6.2.3 Post-connection check 26

7 Operation options 27
7.1 Overview of operation options 27
7.1.1 Operation concept 27
7.1.2 Elements on the electronic insert 27

8 Commissioning 27
8.1 Post-installation and function check 27
8.2 Switching on the device 27

9 Operation 28
9.1 Light signals 28

10 Diagnostics and troubleshooting . . . 29
10.1 Diagnostic information via LEDs 29
10.1.1 LED at electronic insert 29

11 Maintenance 29
11.1 Maintenance tasks 29
11.1.1 Cleaning 30

12 Repair 30
12.1 General notes 30
12.1.1 Repair concept 30
12.1.2 Repairs to Ex-approved devices 31
12.2 Spare parts 31
12.3 Return 31
12.4 Disposal 31

13 Accessories for Liquiphant Density . 31
13.1 Device Viewer 32
13.2 Weather protection cover for dual compartment housing, aluminum 32
13.3 Weather protection cover for aluminum single compartment housing 33
13.4 M12 socket 33
13.5 Weld-in adapter 33
13.6 Sliding sleeves for unpressurized operation . . 34

14 Technical data 35
14.1 Input 35
14.1.1 Measured variable 35
14.1.2 Measuring range 35
14.2 Output 35
14.2.1 Ex connection data 35
14.3 Environment 35
14.3.1 Ambient temperature range 35
14.3.2 Operating altitude 36
14.3.3 Climate class 36
14.3.4 Degree of protection 36
14.3.5 Pollution degree 36
14.4 Process 37
14.4.1 Process temperature range 37
14.4.2 Thermal shock 37
14.4.3 Process pressure range 37
14.4.4 Pressure tightness 37
14.5 Additional technical data 37

Index 38

1 About this document

1.1 Document function

These Operating Instructions contain all the information required in the various life cycle phases of the device: from product identification, incoming acceptance and storage, to installation, connection, operation and commissioning, through to troubleshooting, maintenance and disposal.

1.2 Symbols

1.2.1 Safety symbols

DANGER
This symbol alerts you to a dangerous situation. Failure to avoid this situation will result in serious or fatal injury.

WARNING
This symbol alerts you to a potentially dangerous situation. Failure to avoid this situation can result in serious or fatal injury.

CAUTION
This symbol alerts you to a potentially dangerous situation. Failure to avoid this situation can result in minor or medium injury.

NOTICE
This symbol alerts you to a potentially harmful situation. Failure to avoid this situation can result in damage to the product or something in its vicinity.

1.2.2 Electrical symbols

⏚ Ground connection
Grounded clamp, which is grounded via a grounding system.

⏚ Protective earth (PE)
Ground terminals, which must be grounded prior to establishing any other connections. The ground terminals are located on the inside and outside of the device.

1.2.3 Tool symbols

Flat-blade screwdriver

Allen key

Open-ended wrench

1.2.4 Symbols for certain types of information

Permitted
Procedures, processes or actions that are permitted

Preferred
Procedures, processes or actions that are preferred

Forbidden
Procedures, processes or actions that are forbidden

Tip
Indicates additional information

Reference to documentation

Reference to page

Reference to graphic

1.2.5 Symbols in graphics

1, 2, 3, ...
Item numbers

1., 2., 3.
Series of steps

Result of a step

Notice or individual step to be observed

A, B, C, ...
Views

Viewing angle
Indicates the object is shown from another view

Hazardous area
Indicates the hazardous area

Safe area (non-hazardous area)
Indicates the non-hazardous area

1.3 Documentation

For an overview of the scope of the associated Technical Documentation, refer to the following:
- *Device Viewer* (www.endress.com/deviceviewer): Enter the serial number from the nameplate
- *Endress+Hauser Operations app*: Enter serial number from nameplate or scan matrix code on nameplate.

The following document types are available in the Downloads area of the Endress+Hauser website (www.endress.com/downloads), depending on the product configuration:

Document type	Purpose and content of the document
Technical Information (TI)	**Planning aid** This document contains all the technical data on the product and provides an overview of everything that can be ordered with the product.
Brief Operating Instructions (KA)	**Quick guide to obtaining the first measured value** The Operating Instructions contain all the essential information about the product from incoming acceptance to initial commissioning.
Operating Instructions (BA)	**Reference** The Operating Instructions contain the information that is required in the various phases of the life cycle of the product: From product identification, incoming acceptance and storage, to mounting, connection, operation and commissioning through to troubleshooting, maintenance and disposal.
Description of Device Parameters (GP)	**Reference for parameters** The document contains detailed explanations of readable or configurable parameters in the product. The description is aimed at those who work with the product over its entire life cycle and perform specific configurations.

Document type	Purpose and content of the document
Safety Instructions (XA)	Safety Instructions for electrical equipment in hazardous areas are supplied with the product depending on the approval. These are an integral part of the Operating Instructions. The nameplate indicates the Safety Instructions (XA) that are relevant to the product.
Supplementary device-dependent documentation (SD/FY)	Always comply strictly with the instructions in the relevant supplementary documentation. The supplementary documentation is an integral part of the product documentation.

1.4 Registered trademarks

Modbus®
Registered trademark of SCHNEIDER AUTOMATION, INC.

OPC UA
Registered trademark of the OPC Foundation, Scottsdale, Arizona, USA

HART®
Registered trademark of the FieldComm Group, Austin, Texas, USA

2 Basic safety instructions

2.1 Requirements for the personnel

The personnel for installation, commissioning, diagnostics and maintenance must fulfill the following requirements:
- Trained, qualified specialists must have a relevant qualification for this specific function and task.
- Are authorized by the plant owner/operator.
- Are familiar with federal/national regulations.
- Before starting work, read and understand the instructions in the manual and supplementary documentation as well as the certificates (depending on the application).
- Follow instructions and comply with basic conditions.

The operating personnel must fulfill the following requirements:
- Are instructed and authorized according to the requirements of the task by the facility's owner-operator.
- Follow the instructions in this manual.

2.2 Intended use

The device described in this manual is intended only for the density measurement of liquids.

The measuring system consists of:
- one Density Calculator QML51,
- up to two Liquiphant Density units,
- up to two temperature sensors, and
- up to two pressure measuring cells.

Density Calculator QML51 uses mathematical methods and standards to calculate derived variables such as the concentration of a medium.

Do not exceed or drop below the relevant limit values for the device
See the Technical Documentation

Incorrect use
The manufacturer is not liable for harm caused by improper or unintended use.

Avoid mechanical damage:
- Do not touch or clean device surfaces with pointed or hard objects.

Clarification for borderline cases:
- For special media and fluids for cleaning, Endress+Hauser is glad to provide assistance in verifying the corrosion resistance of fluid-wetted materials, but does not accept any warranty or liability.

Residual risks
Due to the transfer of heat from the process and power dissipation within the electronics, the temperature of the Liquiphant housing may increase to up to 80 °C (176 °F) during operation. When in operation, the sensor can reach a temperature close to the medium temperature.

Danger of burns from contact with surfaces!
- In the event of elevated fluid temperatures, ensure protection against contact to prevent burns.

2.3 Workplace safety

For work on and with the device:
- Wear the required personal protective equipment as per national regulations.

2.4 Operational safety

Damage to the device!
- Operate the device only if it is in proper technical condition, free from errors and faults.
- The operator is responsible for the trouble-free operation of the device.

Configuration, testing and maintenance work on the device

Process safety may be at risk during configuration, testing and maintenance work on the device.
- Alternative supervisory measures must be taken to guarantee the operational safety and process safety.

Modifications to the device

Unauthorized modifications to the device are not permitted and can lead to unforeseeable dangers.
- If modifications are nevertheless required, consult Endress+Hauser.

Repair

To ensure continued operational safety and reliability:
- Only perform repair work on the device if this is expressly permitted.
- Observe federal/national regulations pertaining to the repair of an electrical device.
- Use original spare parts and accessories from Endress+Hauser only.

Hazardous area

To eliminate danger to persons or the facility when the device is used in the hazardous area (e.g. explosion protection):
- Check the nameplate to verify if the device ordered can be put to its intended use in the hazardous area.
- Comply with the instructions in the separate supplementary documentation, which is an integral part of this manual.

2.5 Product safety

This state-of-the-art device is designed and tested in accordance with good engineering practice to meet operational safety standards. It left the factory in a condition in which it is safe to operate.

It meets general safety standards and legal requirements. It also complies with the EU directives listed in the device-specific EU declaration of conformity. The manufacturer confirms this by affixing the CE mark.

2.6 IT security

The manufacturer warranty is valid only if the product is installed and used as described in the Operating Instructions. The product is equipped with security mechanisms to protect it against any inadvertent changes to the settings.

IT security measures, which provide additional protection for the product and associated data transfer, must be implemented by the operators themselves in line with their security standards.

3 Product description

Liquiphant FTL51B sensor with electronic insert FEL60D

For measuring the density of liquid media in conjunction with Density Calculator QML51. Also suitable for use in hazardous areas.

3.1 Measuring principle

The measuring system consists of the following main components:
- Liquiphant Density
- Density calculator

In conjunction with the density calculator, the Liquiphant Density measures the density of a Newtonian, purely viscous, liquid in pipes and tanks.

A piezoelectric drive causes the vibrating fork of the Liquiphant Density to vibrate at its resonance frequency. Changes in liquid density cause a change in the resonance frequency of the vibrating fork. As a result, the density of the medium has a direct impact on the resonance frequency of the vibrating fork. This effect is used for density measurement.

In the density calculator, the density of the liquid is calculated from the resonance frequency of the vibrating fork transmitted by the sensor and from stored sensor-specific parameters. To compensate for temperature and pressure influences, additional corresponding sensors can be connected to the density calculator.

3.2 Measuring system

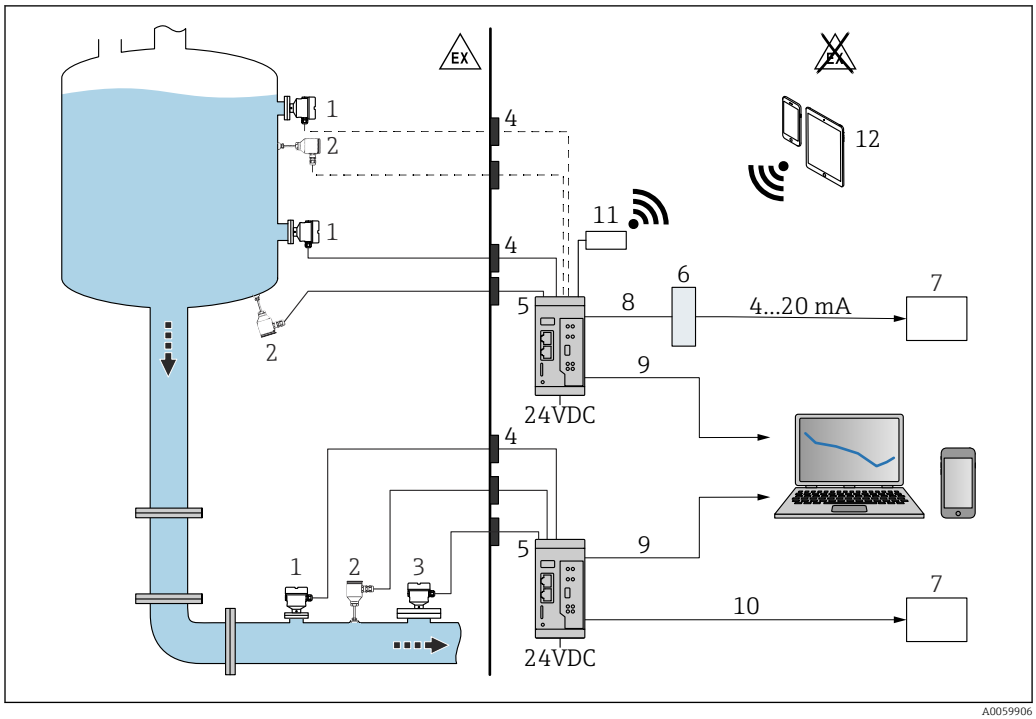

1 *Density measurement with Density Calculator QML51*

1 *Liquiphant Density with electronic insert FEL60D → pulse output*
2 *Temperature sensor, e.g.4 to 20 mAoutput*
3 *Pressure transmitter 4 to 20 mAoutput; required for pressures above 6 bar (87 psi) or for pressure fluctuations.*
4 *Ex barrier (Liquiphant Density, temperature and/or pressure measuring cell installed in the hazardous area)*
5 *Density Calculator QML51*
6 *Modbus TCP to 4 to 20 mA converter*
7 *Programmable logic controller (PLC)*
8 *Modbus TCP*
9 *Ethernet*
10 *Modbus TCP or OPC UA*
11 *TELTONIKA Router RUT241 (accessory). For a wireless connection.*
12 *Mobile devices*

For use in hazardous areas: Ex barrier via RN22 active barrier. The two-channel RN22 active barrier powers analog device circuits and safety equipment up to SIL 2 (SC 3). The intrinsically safe, HART® transparent interface provides a reliable connection between the field devices and Density Computer QML51. It is connected to 2-wire/4-wire devices in hazardous areas and provides a second galvanically isolated signal output in accordance with NAMUR NE 175.

In addition to calculating the density of a liquid medium, Density Calculator QML51 can also determine the reference density of the medium and the concentration of a solution, as well as detect up to four different media or an empty pipeline.

In doing so, the density calculator evaluates up to two measuring points and directly supplies connected two-wire transmitters with auxiliary power. This allows the connection of up to two Liquiphant Density sensors and two temperature sensors for compensation of temperature effects in order to calculate reference densities.

For concentration determination, stored standards such as ICUMSA for sugar concentrations, OIML ITS-90 for ethanol, and various preconfigured calculations for electrolyte solutions (according to the Laliberté-Cooper model) can be used.

Specific reference density or concentration tables can be entered manually in the form of linearization tables or imported into the density calculator in standard data formats (e.g., .csv, .xlsx) and used for calculations.

Density and concentration values can be output in various units, for example, SI units, °Baume, °Brix or °API.

Configuration of the QML51 is performed via an integrated web server, which can be accessed via a secure TLS connection using a standard web browser.

For output to a PLC or a SCADA system, the QML51 supports the Ethernet protocols Modbus TCP and OPC UA. If a current signal is required for connection to a PLC, this can be generated via a converter. A converter that generates up to 4 channels with an analog 4 to 20 mA signal from the Modbus TCP protocol is available as an accessory.

3.3 Product design

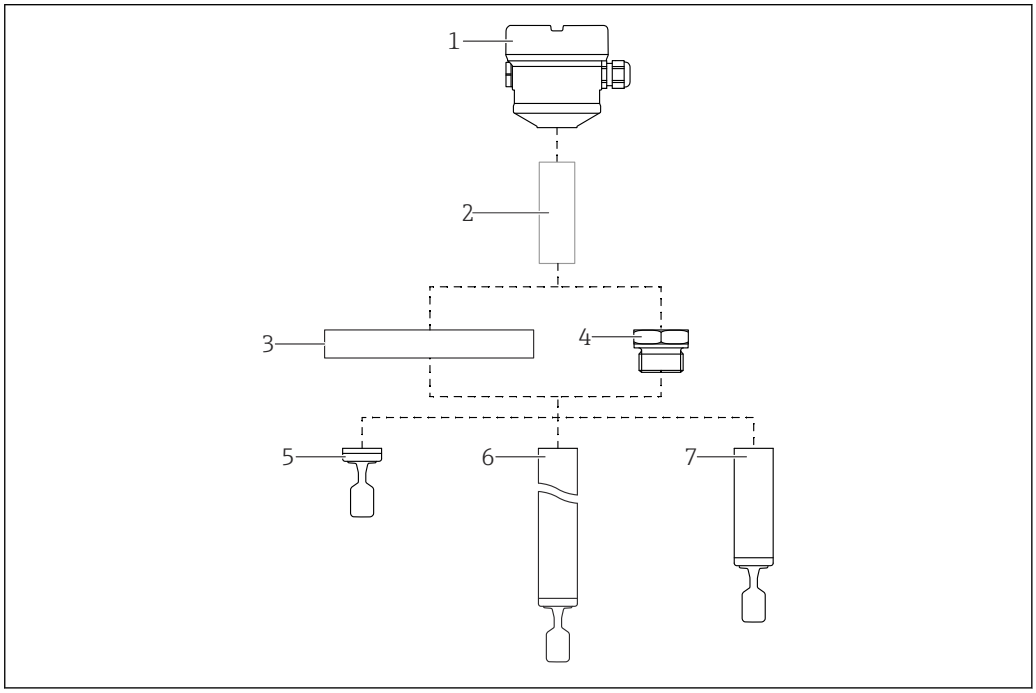

2 Product design: Liquiphant FTL51B

1 *Housing with electronic insert FEL60D and cover*
2 *Temperature spacer, pressure-tight feedthrough (second line of defense), optional*
3 *Process connection with flange (optional)*
4 *Process connection with thread (optional)*
5 *Compact probe version with tuning fork*
6 *Pipe extension probe with tuning fork*
7 *Short tube version of probe with tuning fork*

4 Incoming acceptance and product identification

4.1 Incoming acceptance

On receipt of the delivery:

1. Check the packaging for damage.
   ↳ Report all damage immediately to the manufacturer.
   Do not install damaged components.
2. Check the scope of delivery using the delivery note.

3. Compare the data on the nameplate with the order specifications on the delivery note.
4. Check the technical documentation and all other necessary documents, e.g. certificates, to ensure they are complete.

If one of the conditions is not satisfied, contact the manufacturer.

4.2 Product identification

The following options are available for identification of the device:
- Nameplate specifications
- Order code with breakdown of the device features on the delivery note
- Enter the serial numbers from the nameplates in *Device Viewer* (www.endress.com/deviceviewer): all the information about the device is displayed.

4.2.1 Nameplate

Do you have the correct device?

The nameplate provides you with the following information on the device:
- Manufacturer identification, device designation
- Order code
- Extended order code
- Serial number
- Tag name (TAG) (optional)
- Technical values such as supply voltage, current consumption, ambient temperature, communication-specific data (optional)
- Degree of protection
- Approvals with symbols
- Reference to Safety Instructions (XA) (optional)

▶ Compare the information on the nameplate with the order.

4.2.2 Manufacturer address

Endress+Hauser SE+Co. KG
Hauptstraße 1
79689 Maulburg, Germany

Place of manufacture: See nameplate.

4.3 Storage and transport

4.3.1 Storage conditions

Use original packaging.

Store the device in clean and dry conditions and protect from damage caused by shocks

Storage temperature

- **Device Liquiphant:** −40 to +80 °C (−40 to +176 °F)
- **Density Computer QML51:**−25 to +85 °C (−13 to +185 °F)

4.3.2 Transporting the device

- Transport the device to the measuring point in the original packaging
- Hold the device by the housing, temperature spacer, flange or extension pipe
- Do not bend, shorten or extend the tuning fork

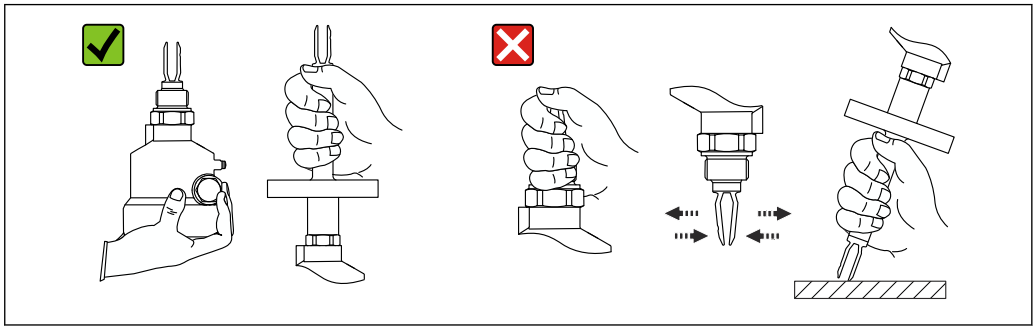

A0034846

3 *Handling the device during transportation*

5 Installation

Mounting instructions
- Any orientation for compact version or version with a pipe length of up to 500 mm (19.7 in)approx.
- Vertical orientation from above for device with long pipe
- Minimum distance between the fork tip and the tank wall or pipe wall: 10 mm (0.39 in)

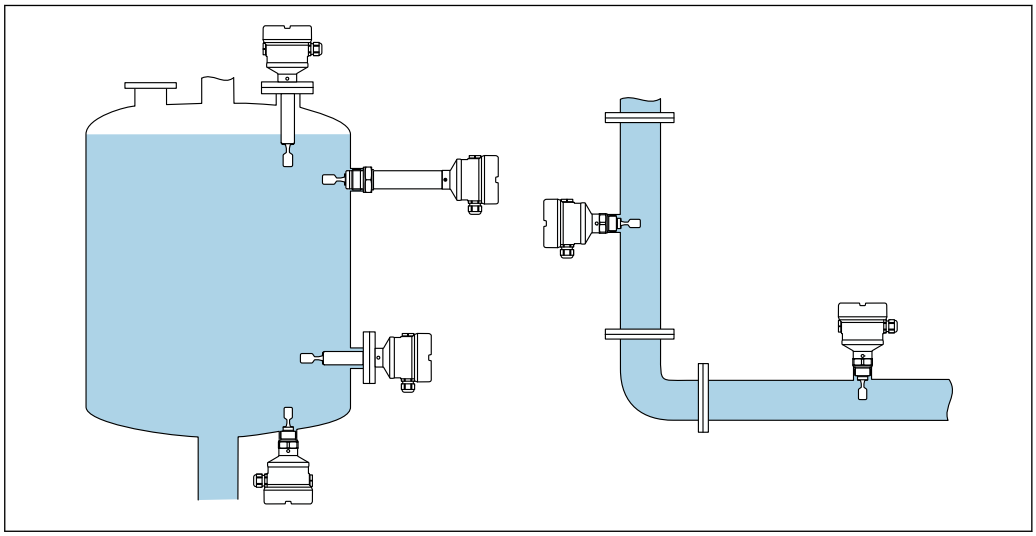

A0039739

4 *Installation examples for a vessel, tank or pipe*

5.1 Installation requirements

The mounting location must be selected such that the vibrating fork and the membrane are always immersed in the medium.

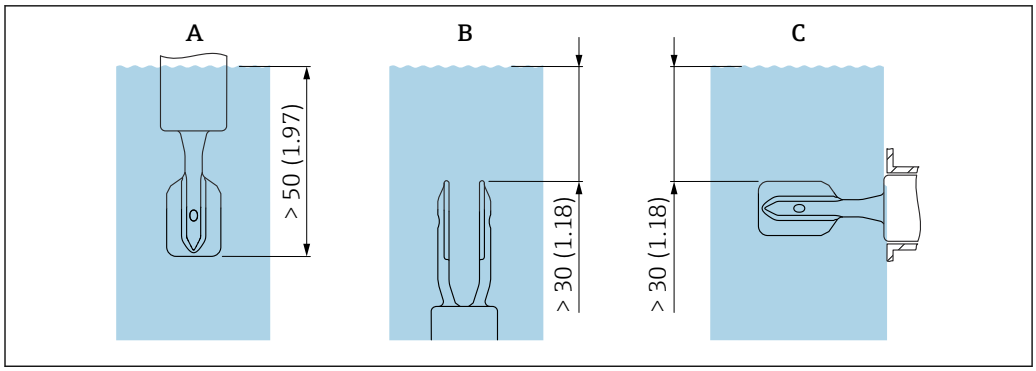

5 *Unit mm (in)*

A Installation from above
B Installation from below
C Installation from the side

- Avoid air bubbles in pipe or nozzle
- Ensure suitable ventilation

Maximum viscosity: 350 mPa·s (3.5 P)

5.1.1 Flow velocity - Installation in piping

Install the tuning fork within the medium flow

- Flow velocity: < 2 m/s (6.56 ft/s) per second
- Prevents the formation of air bubbles (1)

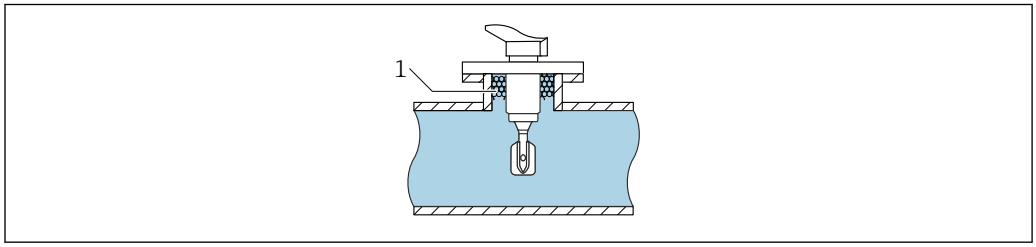

6 *Installation example in pipes within the media flow*

Install the tuning fork away from the direct flow of medium

Flow velocity: < 2 m/s (6.56 ft/s)

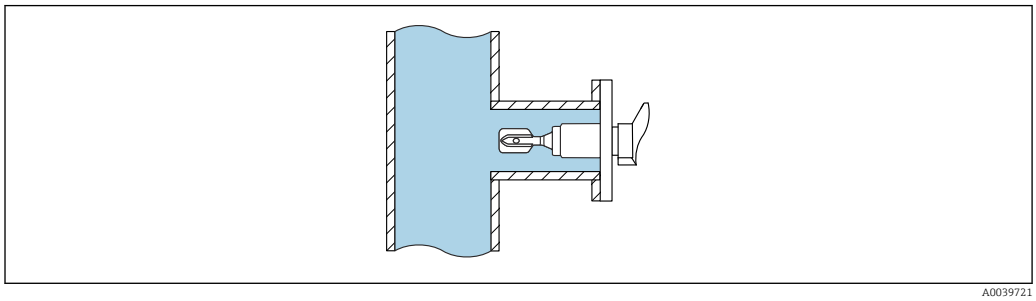

7 *Installation example in pipes away from the direct flow of medium*

5.1.2 Inlet and outlet runs

Inlet run

If possible, install the sensor as far upstream as possible, e.g. valves, T-pieces, elbows, flange elbows, etc.

To comply with the accuracy specification, the inlet run must meet the following requirements:

Inlet run: ≥ 5x DN (nominal diameter) - min. 750 mm (29.5 in)

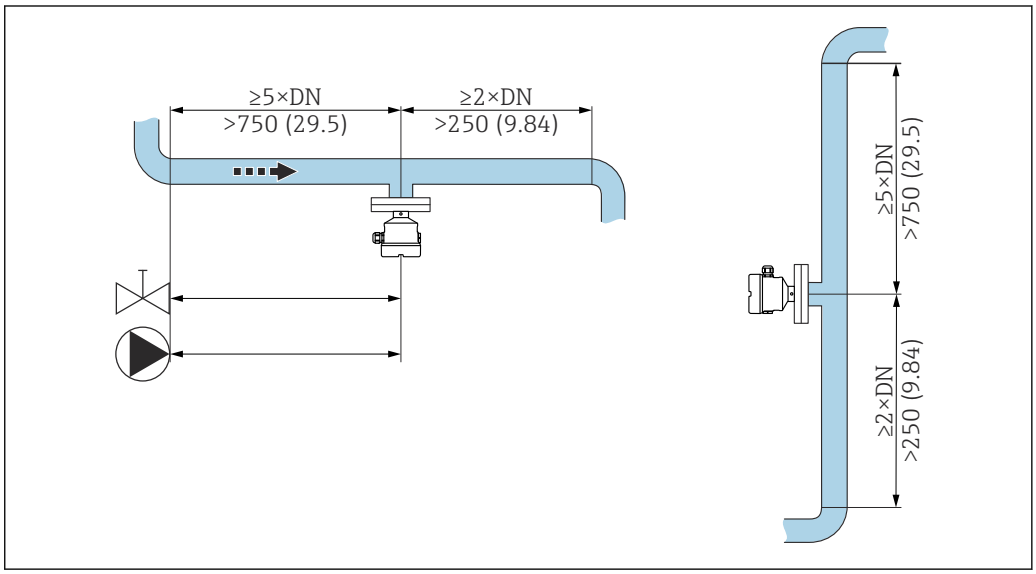

8 *Installing the inlet run. Unit of measurement mm (in)*

Outlet run

To comply with the accuracy specification, the outlet run must meet the following requirements:

Outlet run: ≥ 2x DN (nominal diameter) - min. 250 mm (9.84 in)

The pressure and temperature sensor must be installed on the outlet side of the flow direction after the Liquiphant density sensor. When installing pressure and temperature measuring points downstream of the device, make sure the distance between the measuring point and the device is sufficient.

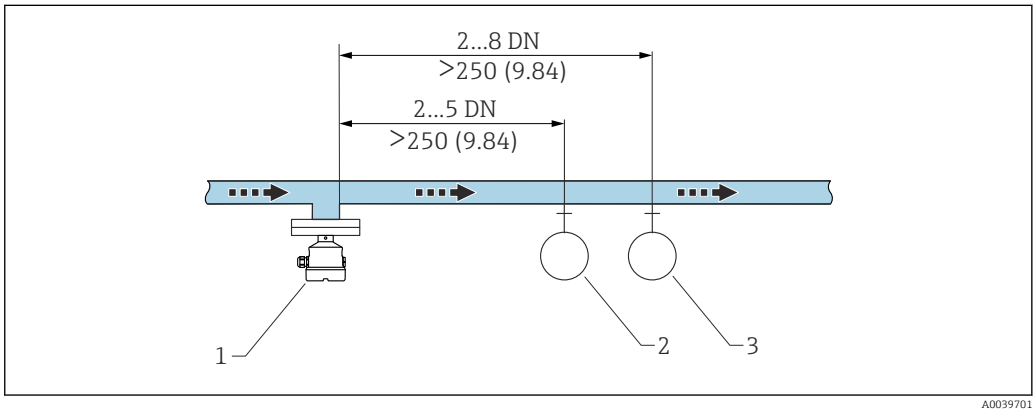

9 *Installing the outlet run. Unit of measurement mm (in)*

1 *Liquiphant density sensor*
2 *Pressure measuring point*
3 *Temperature measuring point*

5.1.3 Correction factor

If the vibration of the vibrating fork is affected by conditions at the mounting location, the measurement result can be adjusted using a correction factor (r).

Standard installation

Correction factor “r” as a function of the height “h”, for entry in the Density Computer QML51:

	h	r
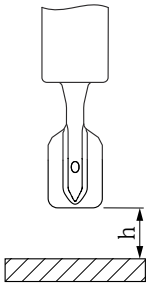 A0039687	12 mm (0.47 in)	1.0026
	14 mm (0.55 in)	1.0016
	16 mm (0.63 in)	1.0011
	18 mm (0.71 in)	1.0008
	20 mm (0.79 in)	1.0006
	22 mm (0.87 in)	1.0005
	24 mm (0.94 in)	1.0004
	26 mm (1.02 in)	1.0004
	28 mm (1.10 in)	1.0004
	30 mm (1.18 in)	1.0003
	32 mm (1.26 in)	1.0003
	34 mm (1.34 in)	1.0002
	36 mm (1.42 in)	1.0001
	38 mm (1.50 in)	1.0001
	40 mm (1.57 in)	1.0000

Installation in a bypass

Correction factor "r" as a function of the internal diameter of bypass "D", for entry in the Density Computer QML51:

	D	r
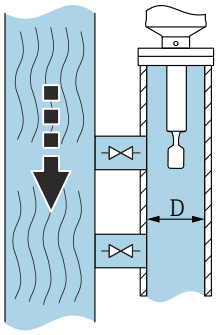 A0039689	<44 mm (1.73 in)	-
	44 mm (1.73 in)	1.0191
	46 mm (1.81 in)	1.0162
	48 mm (1.89 in)	1.0137
	50 mm (1.97 in)	1.0116
	52 mm (2.05 in)	1.0098
	54 mm (2.13 in)	1.0083
	56 mm (2.20 in)	1.0070
	58 mm (2.28 in)	1.0059
	60 mm (2.36 in)	1.0050
	62 mm (2.44 in)	1.0042
	64 mm (2.52 in)	1.0035
	66 mm (2.60 in)	1.0030
	68 mm (2.68 in)	1.0025
	70 mm (2.76 in)	1.0021

	D	r
	72 mm (2.83 in)	1.0017
	74 mm (2.91 in)	1.0014
	76 mm (2.99 in)	1.0012
	78 mm (3.07 in)	1.0010
	80 mm (3.15 in)	1.0008
	82 mm (3.23 in)	1.0006
	84 mm (3.31 in)	1.0005
	86 mm (3.39 in)	1.0004
	88 mm (3.46 in)	1.0003
	90 mm (3.54 in)	1.0003
	92 mm (3.62 in)	1.0002
	94 mm (3.70 in)	1.0002
	96 mm (3.78 in)	1.0001
	98 mm (3.86 in)	1.0001
	100 mm (3.94 in)	1.0001
	>100 mm (3.94 in)	1.0000

Installation in pipe

Correction factor "r" as a function of the internal diameter of pipe "D", for entry in the Density Computer QML51:

	D	r
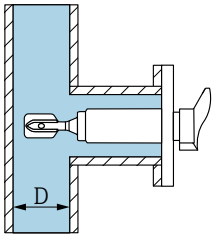 A0039707	<44 mm (1.73 in)	-
	44 mm (1.73 in)	1.0225
	46 mm (1.81 in)	1.0167
	48 mm (1.89 in)	1.0125
	50 mm (1.97 in)	1.0096
	52 mm (2.05 in)	1.0075
	54 mm (2.13 in)	1.0061
	56 mm (2.20 in)	1.0051
	58 mm (2.28 in)	1.0044
	60 mm (2.36 in)	1.0039
	62 mm (2.44 in)	1.0035
	64 mm (2.52 in)	1.0032
	66 mm (2.60 in)	1.0028
	68 mm (2.68 in)	1.0025
	70 mm (2.76 in)	1.0022
	72 mm (2.83 in)	1.0020
	74 mm (2.91 in)	1.0017
	76 mm (2.99 in)	1.0015
	78 mm (3.07 in)	1.0012
	80 mm (3.15 in)	1.0009
	82 mm (3.23 in)	1.0007

	D	r
	84 mm (3.31 in)	1.0005
	86 mm (3.39 in)	1.0004
	88 mm (3.46 in)	1.0003
	90 mm (3.54 in)	1.0002
	92 mm (3.62 in)	1.0002
	94 mm (3.70 in)	1.0001
	96 mm (3.78 in)	1.0001
	98 mm (3.86 in)	1.0001
	100 mm (3.94 in)	1.0001
	>100 mm (3.94 in)	1.0000

5.1.4 Preventing buildup

NOTICE

The presence of buildup or corrosion on the vibrating fork affects the result of the measurement and must be avoided!

- If required, define regular maintenance intervals.

5.1.5 Take clearance into consideration

Allow sufficient space outside the tank for mounting, connection and replacement of the electronic insert.

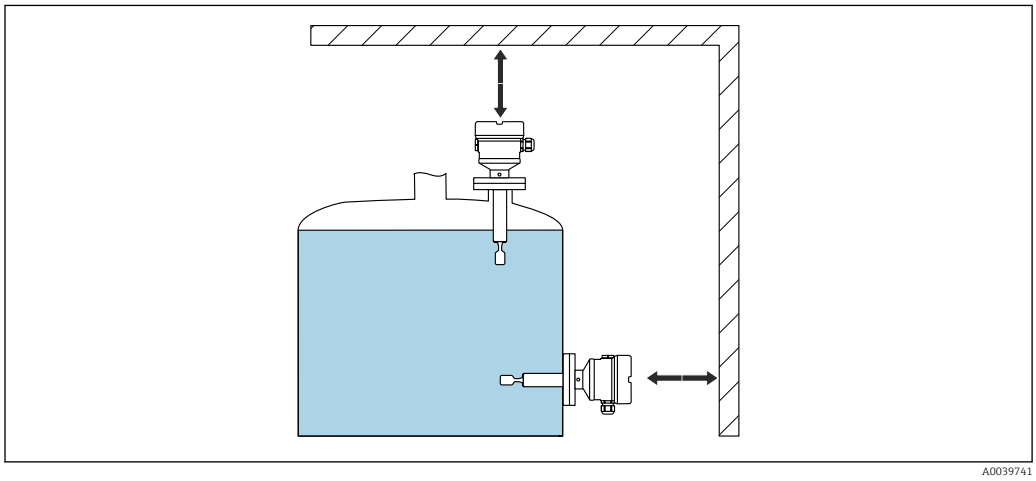

10 Take clearance into consideration

5.1.6 Support the device

Support the device in the event of severe dynamic load. Maximum lateral loading capacity of the pipe extensions and sensors: 75 Nm (55 lbf ft).

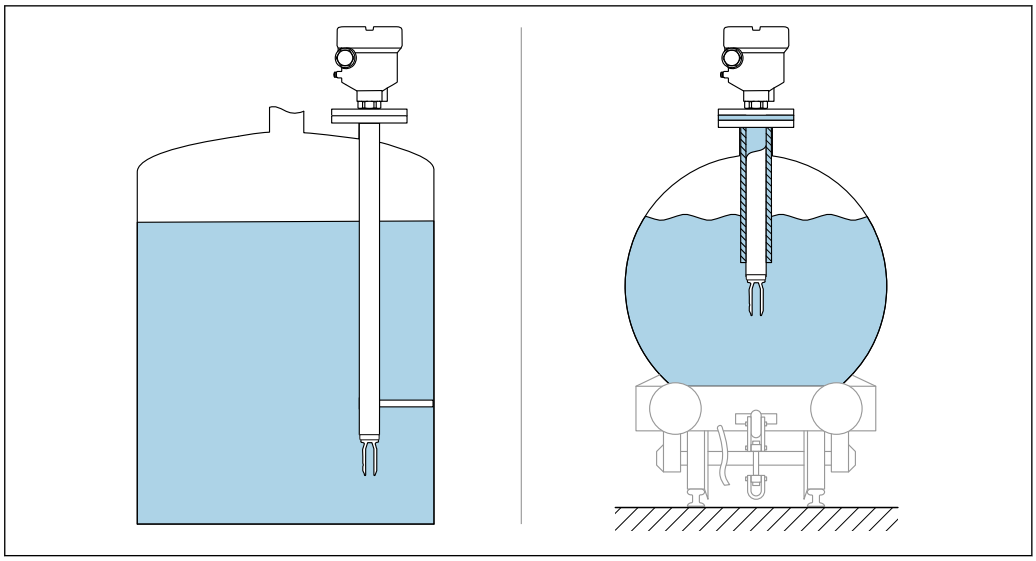

11 *Examples of support in the event of dynamic load*

5.1.7 Weld-in adapter with leakage hole

Position the weld-in adapter so that the leakage hole points downwards. This allows any leakage to be detected at an early stage, as the escaping medium becomes visible.

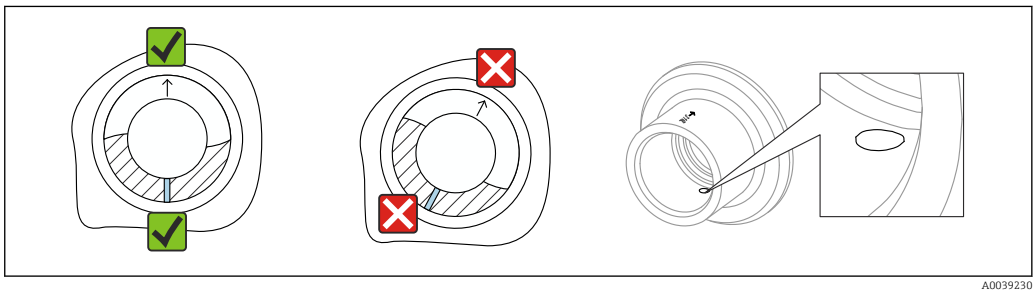

12 *Weld-in adapter with leakage hole*

5.2 Installing the device

5.2.1 Required tool

- Open-ended wrench for sensor installation
- Allen key for housing locking screw

5.2.2 Installation

Align the vibrating fork using the marking

The vibrating fork can be aligned using the marking in such a way that the medium drains off easily and buildup is avoided.

- Markings for threaded connections: Circle (material specification/thread designation opposite)
- Markings for flange or clamp connections: Line or double line

In addition, the threaded connections have a matrix code that is **not** used for alignment.

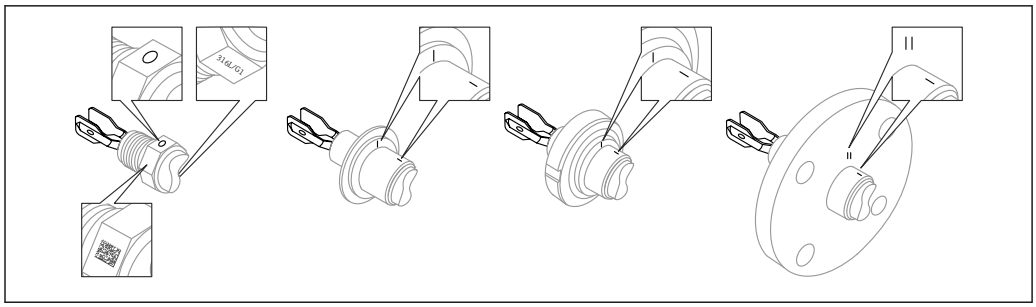

13 *Position of the vibrating fork when installed horizontally in the vessel using the marking*

Installing the device in piping

NOTICE

Incorrect alignment of the tuning fork

Vortices and eddies can falsify the measuring result.

- ▶ Align the tuning fork in the flow direction for internal fixtures in pipes or tanks with an agitator.

- The flow velocity of the medium must not exceed 2 m/s (6.56 ft/s) during operation
- Flow velocity > 2 m/s: Separate the tuning fork from the direct flow of media by using structural features such as a bypass or pipe expansion to reduce the flow velocity to max. 2 m/s (6.56 ft/s)
- The flow will not be significantly impeded if the tuning fork is correctly aligned and the marking is pointing in the direction of flow.
- A marking on the process connection indicates the position of the tuning fork. Threaded connection = dot on the hexagon head; flange = two lines on the flange. The marking is visible when installed.

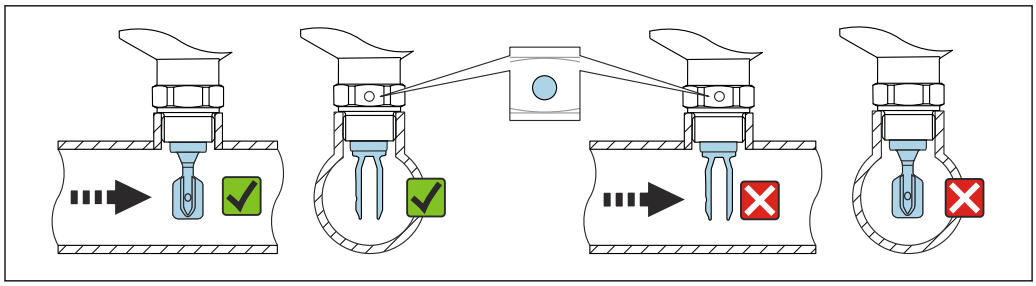

14 *Installation in pipes (take fork position and marking into consideration)*

Screwing in the device

- Turn by the hex bolt only, 15 to 30 Nm (11 to 22 lbf ft)
- Do not turn at the housing!

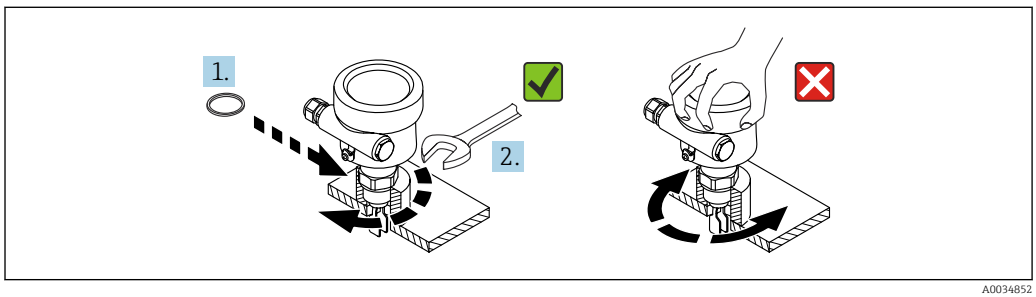

15 *Screwing in the device*

Aligning the cable entry

All housings can be aligned. Forming a drip loop on the cable prevents moisture from entering the housing.

Housing without set screw

The device housing can be rotated up to 350°.

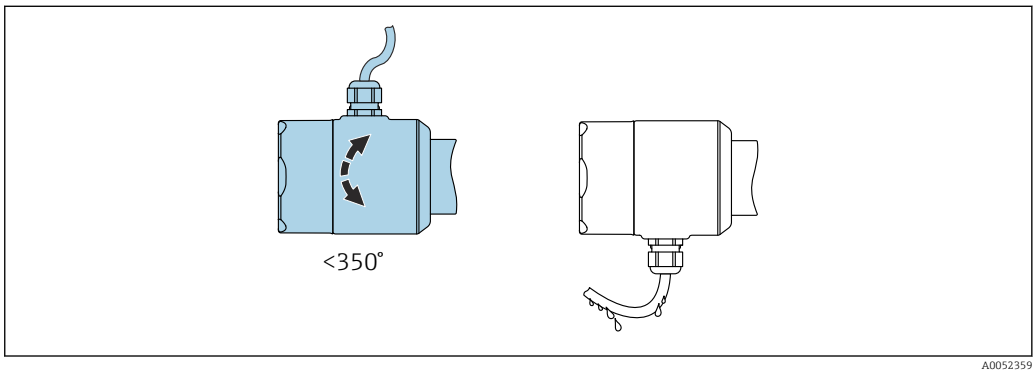

16 *Housing without set screw; form a drip loop on the cable.*

Housing with locking screw

NOTICE

The locking screw is not sufficiently tightened when the device is delivered.
The housing may rotate and become loose due to vibration.
- Tighten the locking screw to 3.5 Nm (2.58 lbf ft).

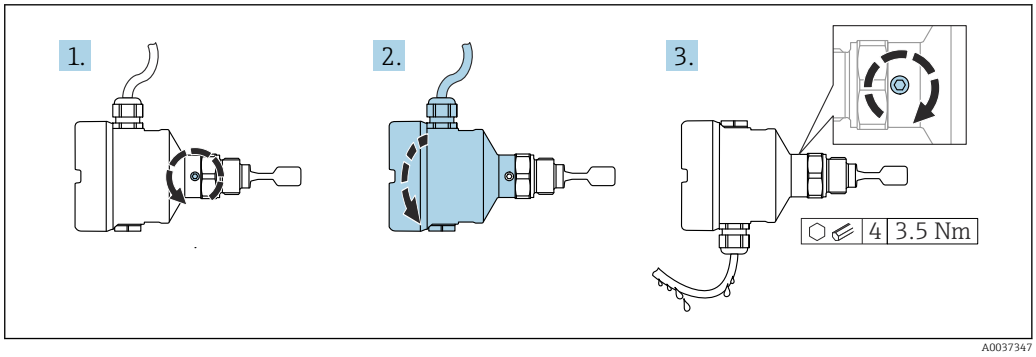

17 *Housing with external locking screw; form a drip loop on the cable*

1. Loosen the external locking screw (maximum 1.5 turns).
2. Turn the housing and align the cable entry.
3. Tighten the external locking screw.

Rotating the housing

The housing can be rotated up to 380° by loosening the locking screw.

NOTICE

The housing cannot be completely unscrewed.
- Loosen the external locking screw by a maximum of 1.5 turns. If the screw is turned further or completely removed (beyond the screw lifting point), small parts (counter disk) may become loose and fall out.
- Tighten the locking screw (hex socket 4 mm (0.16 in)) to 3.5 Nm (2.58 lbf ft) ±0.3 Nm (±0.22 lbf ft).

Closing the housing covers

NOTICE

Thread and housing cover damaged from dirt and fouling!

- Remove dirt (e.g. sand) on the thread of the covers and housing.
- If you continue to encounter resistance when closing the cover, check the thread again for fouling.

Housing thread
The threads of the electronics and connection compartment can be coated with an anti-friction coating.
The following applies for all housing materials:
Do not lubricate the housing threads.

5.3 Sliding sleeves

For more details, see the "Accessories" section.

Special Documentation SD02398F (Installation Instructions)

5.4 Post-mounting check

❑ Is the device undamaged (visual inspection)?

❑ Are the measuring point number and labeling correct (visual inspection)?

❑ Is the device adequately protected from precipitation and direct sunlight?

❑ Is the device properly secured?

❑ Does the device comply with the measuring point specifications?

For example:
- Process temperature
- Process pressure
- Ambient temperature
- Measuring range

6 Electrical connection

6.1 Connecting requirements

6.1.1 Cover with securing screw

The cover is locked by a securing screw in devices for use in hazardous areas with certain explosion protection.

NOTICE

If the securing screw is not positioned correctly, the cover cannot provide secure sealing.

- Open the cover: slacken the screw of the cover lock with a maximum of 2 turns so that the screw does not fall out. Fit the cover and check the cover seal.
- Close the cover: screw the cover securely onto the housing, making sure that the securing screw is positioned correctly. There should not be any gap between the cover and housing.

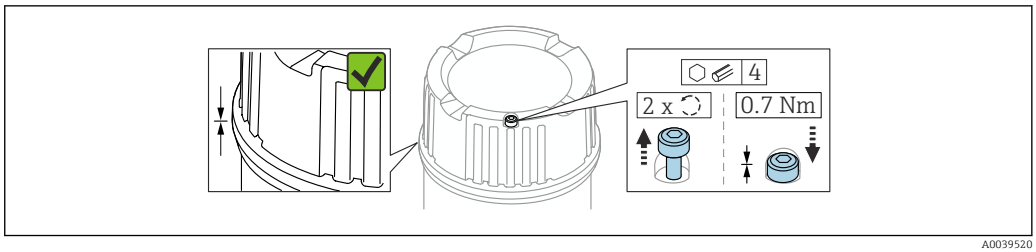

18 *Cover with securing screw*

6.1.2 Connecting protective earth (PE)

When the device is used in hazardous areas, it must always be included in the potential equalization of the system, irrespective of the operating voltage. This is possible by connecting to the inner or outer protective ground connection (PE).

6.2 Connecting the device

Housing thread
The threads of the electronics and connection compartment can be coated with an anti-friction coating.
The following applies for all housing materials:
Do not lubricate the housing threads.

6.2.1 2-wire density (electronic insert FEL60D) for density measurement

NOTICE

Operation with other switching units is not permitted.
Destruction of electronic components.

- Do not install the FEL60D electronic insert in devices that were originally used as level switches.

Terminal assignment

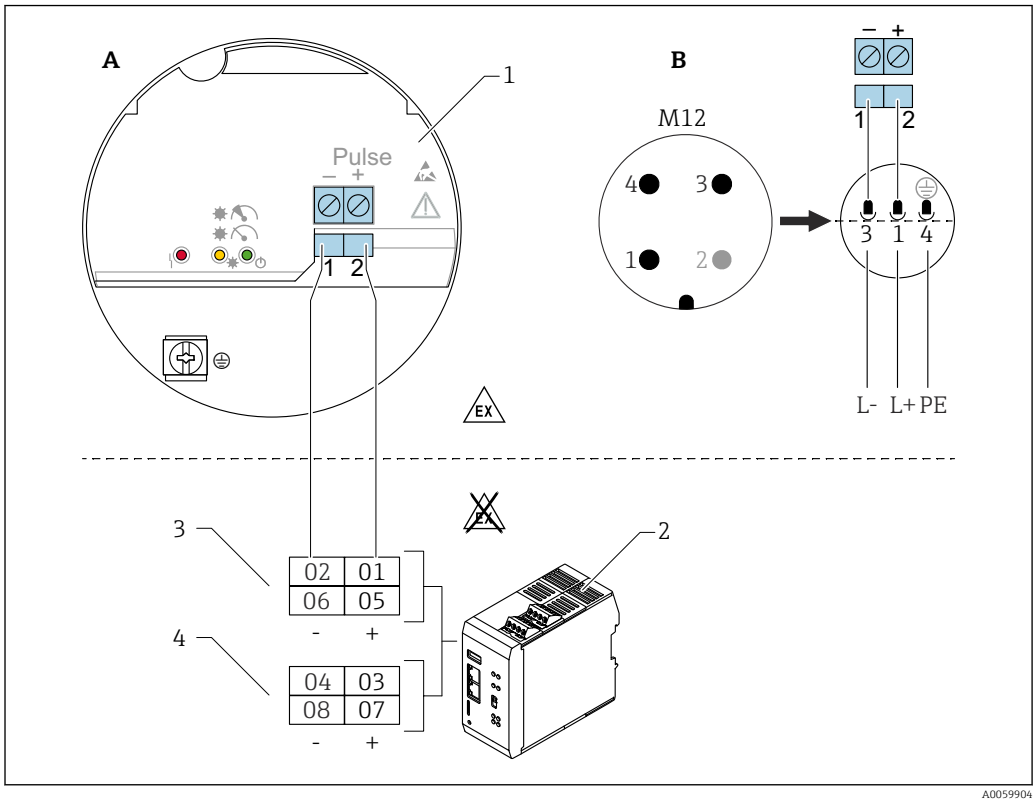

19 *Connection diagram: connection of electronic insert FEL60D to the Density Calculator QML51*

A Connection wiring with terminals
B Connection wiring with M12 plug in housing as per EN61131-2 standard
1 Electronic insert FEL60D
2 Density Calculator QML51
3 PFM channels (default setting)
4 4 to 20 mA(HART) channels (default setting), e.g. for temperature measuring devices

The channels are preset. The configuration can be changed.

It is not possible to connect a device with a pulse output (PFM) and a device with a 4 to 20 mA HART or HART-only transmission to the same terminal block if the measured values are to be transmitted via HART communication.

It is not possible to connect two devices with a pulse output (PFM) to the same terminal block.

The following devices can be connected to one terminal block:
- One device with a pulse output and one additional device with an analog output (4 to 20 mA).
- One device with a pulse output and one additional device with a 4 to 20 mA HART output, provided that HART communication is not used.
- Only one device with a pulse output. An additional device with a pulse output cannot be connected to the same terminal block.
- One or 2 devices with 4 to 20 mA or 4 to 20 mA HART In this case, HART communication can be used by both devices.

The previous Liquiphant Density version with FEL50D is compatible with Density Calculator QML51.

Supply voltage

U = DC 24 V ±20 %, only suitable for connecting to the Density Computer QML51

The device must be powered by a voltage supply categorized as "CLASS 2" or "SELV".

Power consumption

- FTL51B Density: P < 160 mW
- Density Computer QML51: P < 9 W

Current consumption

Density: I < 10 mA

Overvoltage protection

Overvoltage category I

Adjusting Liquiphant with density electronics FEL60D

There are 3 different types of adjustment:

- Standard adjustment (as delivered state):
  To determine the sensor characteristics, the fork parameters are measured under two conditions (vacuum and a defined water bath). The device-specific parameters determined are supplied with the device in an adjustment report. These parameters must be transferred to the Density Computer QML51.
- Special adjustment (select in the Product Configurator):
  To determine the sensor characteristics, the fork parameters are measured under three conditions (vacuum and two defined water baths at specified temperatures). The device-specific parameters determined are supplied with the device in an adjustment report. These parameters must be transferred to the Density Computer QML51.
  This type of adjustment achieves an even higher level of accuracy.
- Field adjustment:
  During field adjustment, the density determined by the user is transferred to the Density Computer QML51.

All the necessary parameters of the Liquiphant Density are documented in the **adjustment report** and in the **sensor pass**.

The documents are included in the scope of delivery.

Further information and the documentation currently available can be found on the Endress+Hauser website: www.endress.com → Downloads.

Density measurement

The Liquiphant Density measures the density of a liquid medium in pipes and tanks. The device is suitable for all Newtonian (purely viscous) fluids. In addition, the device is also suitable for use in hazardous areas.

The measurement can be affected by:
- Air bubbles at the sensor
- Sensor not fully covered by medium
- Solid media buildup on the sensor
- High fluid velocity in pipes
- Severe turbulence in the pipe due to inlet and outlet runs that are too short
- Corrosion of the fork
- Non-Newtonian (not purely viscous) behavior of fluids

6.2.2 Connecting the cable

Required tools

- Flat-blade screwdriver (0.6 mm x 3.5 mm) for terminals
- Suitable tool with width across flats AF24/25 (8 Nm (5.9 lbf ft)) for M20 cable gland

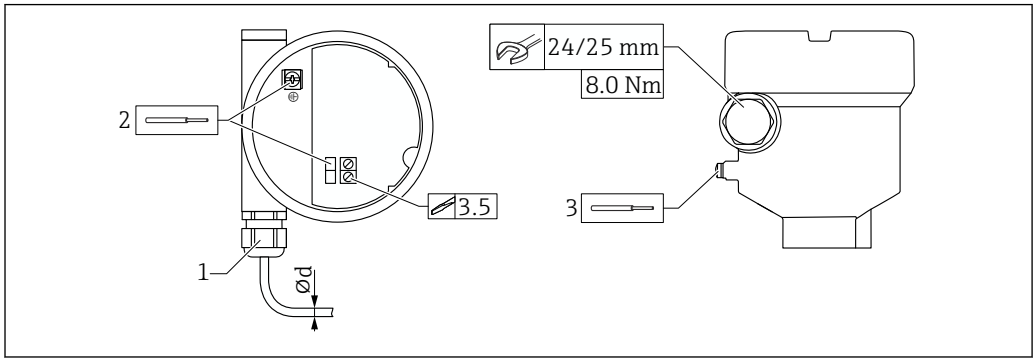

20 Example of coupling with cable entry, electronic insert with terminals

1 M20 coupling (with cable entry), example
2 Maximum conductor cross-section 2.5 mm² (AWG14), ground terminal inside the housing + terminals on the electronics
3 Maximum conductor cross-section 4.0 mm² (AWG12), ground terminal on outside of the housing (example: Plastic housing with outer protective ground connection (PE))
Ød Nickel-plated brass 7 to 10.5 mm (0.28 to 0.41 in)
Plastic 5 to 10 mm (0.2 to 0.38 in)
Stainless steel 7 to 12 mm (0.28 to 0.47 in)
Hygienic stainless steel 7 to 10 mm (0.28 to 0.39 in)

Pay attention to the following when using the M20 coupling
After inserting the cable:
- Counter-tighten the coupling
- Tighten the union nut of the coupling with a torque of 8 Nm (5.9 lbf ft)
- Screw the enclosed coupling into the housing with a torque of 3.75 Nm (2.76 lbf ft)

6.2.3 Post-connection check

- ❑ Is the device or cable undamaged (visual inspection)?
- ❑ Do the cables used comply with the requirements?
- ❑ Do the mounted cables have adequate strain relief?
- ❑ Are the cable glands mounted and firmly tightened?
- ❑ Does the supply voltage match the information on the nameplate?
- ❑ No reverse polarity, is terminal assignment correct?
- ❑ If supply voltage is present, is the green LED lit?
- ❑ Are all the housing covers installed and tightened?
- ❑ Optional: Is the cover tightened with securing screw?

7 Operation options

7.1 Overview of operation options

7.1.1 Operation concept

Operation with the Density Computer QML51 For details, see documentation for the Density Computer QML51.

7.1.2 Elements on the electronic insert

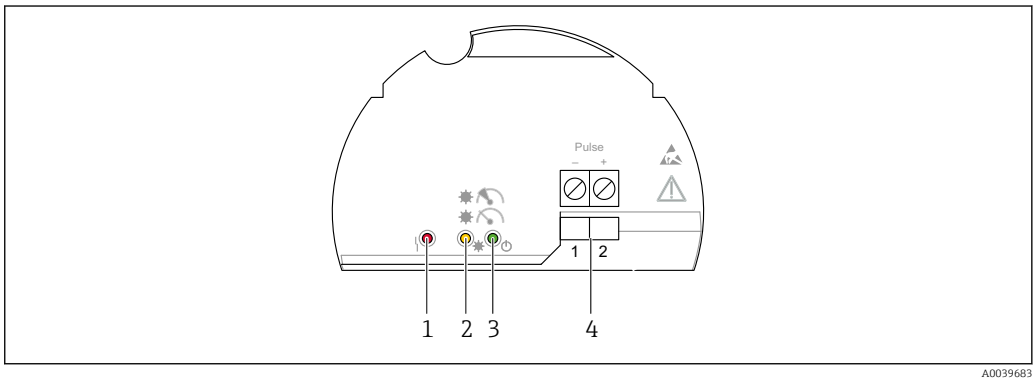

21 Electronic insert FEL60D

1 *LED red, for warning or alarm*
2 *LED yellow, stability of measurement*
3 *LED green, operational status (device is on)*
4 *Pulse output terminals*

8 Commissioning

The contents of this section apply to the Liquiphant.
See also the Operating Instructions for the density calculator: BA02545S.

8.1 Post-installation and function check

Before commissioning the measuring point, check whether the post-installation and post-connection checks have been performed.

Post-mounting check

Post-connection check

8.2 Switching on the device

- Switch on
  - The green LED is lit and the yellow LED flashes 2-3 times

The measurement is stable if both LEDs (green and yellow) are then lit.

9 Operation

The contents of this section apply to the Liquiphant.
See also the Operating Instructions for the density calculator: BA02545S.

9.1 Light signals

Yellow LED
Symbols, information
/ Stable measurement
/ Unstable measurement/process conditions
● Maintenance required

Green LED
Symbols, information
/ Power on
/ ● Power off

Red LED
Symbols, information
/ ● No fault
Maintenance required
Device failure

For more information, see the Technical Information for Liquiphant Density.

10 Diagnostics and troubleshooting

The contents of this section apply to the Liquiphant.
See also the Operating Instructions for the density calculator: BA02545S.

The Liquiphant Density indicates warnings and errors via the LEDs on the electronic insert. The faults diagnosed by the device are displayed in accordance with NE 107. The device behavior corresponds to the diagnostic message (warning or fault).

The device behaves in accordance with NAMUR Recommendation NE 131 "NAMUR standard device requirements for field devices for standard applications".

10.1 Diagnostic information via LEDs

10.1.1 LED at electronic insert

indicator: power supply or off
- No supply voltage present: check supply voltage
- Reverse polarity: check terminal assignment
- Signal line is defective: check signal line
- Incorrect terminal assignment on QML51: Check the terminal configuration on the QML51

indicator: unstable process conditions
- Extreme vibrations from an external source: isolate measuring point from vibrations
- Extremely turbulent flow: provide a calming section
- Flow rate > 2 m/s: keep vibrating fork away from direct flow of medium
- Buildup: remove buildup, allow for cleaning intervals

indicator: maintenance required
- Extreme vibrations from an external source: isolate measuring point from vibrations
- Flow rate > 2 m/s: keep vibrating fork away from direct flow of medium
- Buildup: remove buildup, allow for cleaning intervals
- Vibrating fork is blocked: change installation position

indicator: device failure
- Electronic insert is defective: replace electronic insert
- No connection to sensor: replace sensor

11 Maintenance

11.1 Maintenance tasks

No specific maintenance work is required.

11.1.1 Cleaning

Cleaning of surfaces not in contact with the medium

- Recommendation: Use a lint-free cloth that is either dry or slightly dampened using water.
- Do not use any sharp objects or aggressive cleaning agents that corrode the surfaces (e.g. displays, housing) and seals.
- Do not use high-pressure steam.
- Observe the degree of protection of the device.

The cleaning agent used must be compatible with the materials of the device configuration. Do not use cleaning agents with concentrated mineral acids, bases or organic solvents.

Cleaning of surfaces in contact with the medium

Note the following for cleaning and sterilization in place (CIP/SIP):
- Use only cleaning agents to which the materials in contact with the medium are sufficiently resistant.
- Observe the permitted maximum medium temperature.

Cleaning the vibrating fork

It is not permitted to use the device with abrasive media. Material abrasion on the vibrating fork can result in the device malfunctioning.

- Clean the vibrating fork as necessary
- Cleaning is also possible in the installed state, e.g. CIP Cleaning in Place and SIP Sterilization in Place

12 Repair

12.1 General notes

12.1.1 Repair concept

Endress+Hauser repair concept
- The devices have a modular design
- Customers can carry out repairs

For more information on service and spare parts, please contact your Endress+Hauser sales representative.

12.1.2 Repairs to Ex-approved devices

WARNING

Incorrect repair can compromise electrical safety!
Explosion hazard!

- Only specialist personnel or the manufacturer's service team may carry out repairs on Ex-certified devices in accordance with national regulations.
- Relevant standards and national regulations on hazardous areas, safety instructions and certificates must be observed.
- Only use original spare parts from the manufacturer.
- Please note the device designation on the nameplate. Only identical parts may be used as replacements.
- Carry out repairs according to the instructions.
- Only the manufacturer's service team is permitted to modify a certified device and convert it to another certified version.

12.2 Spare parts

Product spare parts that are currently available can be found online at:
www.endress.com/onlinetools

12.3 Return

The requirements for safe device return can vary depending on the device type and national legislation.

1. Refer to the web page for information: https://www.endress.com
2. If returning the device, pack the device in such a way that it is reliably protected against impact and external influences. The original packaging offers the best protection.

12.4 Disposal

If required by the Directive 2012/19/EU on waste electrical and electronic equipment (WEEE), the product is marked with the depicted symbol in order to minimize the disposal of WEEE as unsorted municipal waste. Do not dispose of products bearing this marking as unsorted municipal waste. Instead, return them to the manufacturer for disposal under the applicable conditions.

13 Accessories for Liquiphant Density

The accessories currently available for the product can be selected at www.endress.com:

1. Select the product using the filters and search field.
2. Open the product page.
3. Select **Spare parts & Accessories**.

The accessories can be partially ordered via the "Accessory enclosed" product structure.

13.1 Device Viewer

All the spare parts for the device, along with the order code, are listed in the *Device Viewer* (www.endress.com/deviceviewer).

13.2 Weather protection cover for dual compartment housing, aluminum

The weather protection cover can be ordered together with the device via the "Accessory enclosed" product structure.

It is used to protect against direct sunlight, precipitation and ice.

The 316L weather protection cover is suitable for dual compartment housings made of aluminum. The delivery includes the holder for direct mounting on the housing.

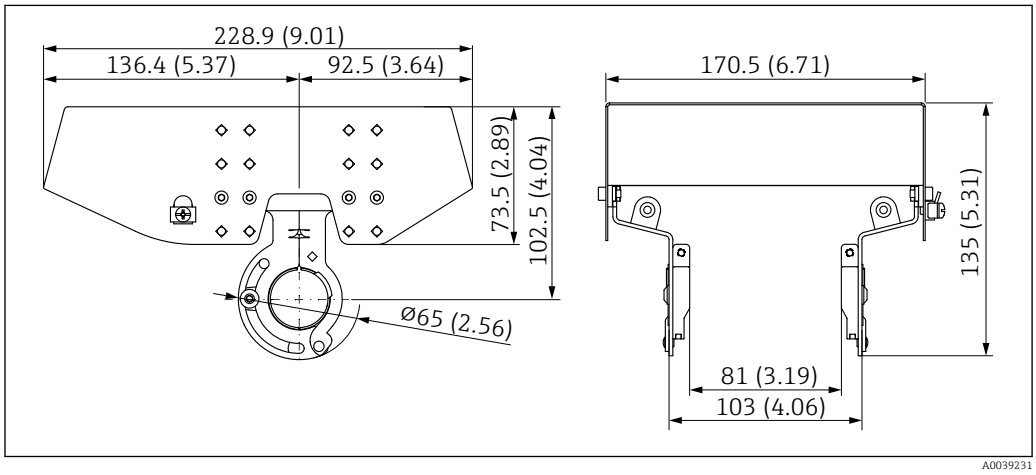

22 Dimensions of weather protection cover, 316L, XW112. Unit of measurement mm (in)

Material
- Weather protection cover: 316L
- Clamping screw: A4
- Bracket: 316L

Accessory order code:
71438303

Special Documentation SD02424F

13.3 Weather protection cover for aluminum single compartment housing

The weather protection cover can be ordered together with the device via the "Accessory enclosed" product structure.

It is used to protect against direct sunlight, precipitation and ice.

The plastic weather protection cover is suitable for the single compartment housing made of aluminum. The delivery includes the holder for direct mounting on the housing.

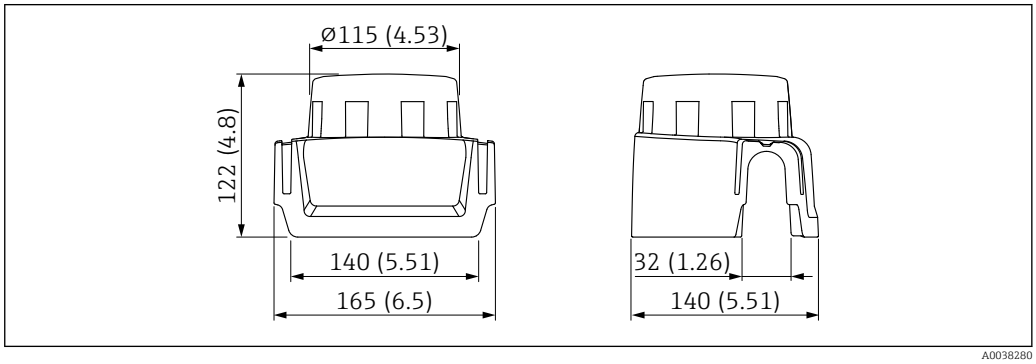

23 Weather protection cover for aluminum single compartment housing. Unit of measurement mm (in)

Material
Plastic

Accessory order code:
71438291

Special Documentation SD02423F

13.4 M12 socket

The M12 sockets listed are suitable for use in the temperature range −25 to 70 °C (−13 to 158 °F).

M12 socket IP69
- Terminated at one end
- Angled
- 5 m (16 ft) PVC cable (orange)
- Slotted nut 316L (1.4435)
- Body: PVC
- Order number: 52024216

M12 socket IP67
- Angled
- 5 m (16 ft) PVC cable (gray)
- Slotted nut Cu Sn/Ni
- Body: PUR
- Order number: 52010285

13.5 Weld-in adapter

Various weld-in adapters are available for installation in vessels or pipes. The adapters are optionally available with inspection certificate 3.1 EN 10204.

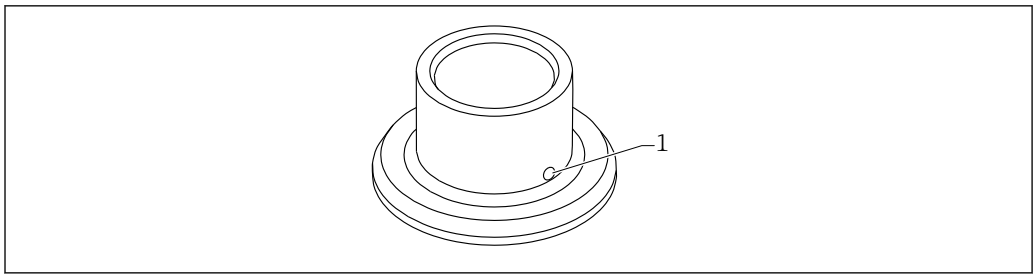

24 *Weld-in adapter (sample view)*

1 Leakage hole

Weld in the weld-in adapter in such a way that the leakage hole is pointing downwards. This enables any leaks to be detected quickly.

- G 1, Ø53 mounting on the pipe
- G 1, Ø60 flush mount on the vessel
- G ¾, Ø55 flush mount
- G 1 sensor adjustable

For detailed information, see "Technical Information" TI00426F (Weld-in adapters, process adapters and flanges)

Available in the Downloads area of the Endress+Hauser website (www.endress.com/downloads).

13.6 Sliding sleeves for unpressurized operation

Not suitable for use in explosive atmospheres.

Switch point, infinitely adjustable.

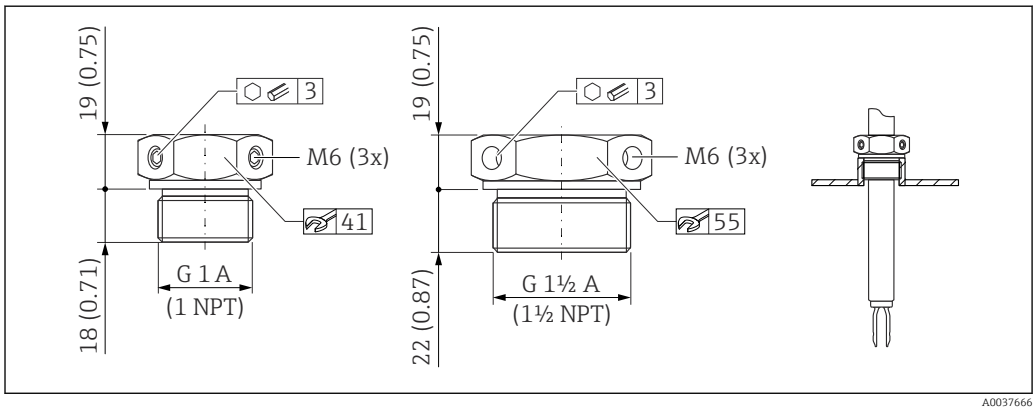

25 *Sliding sleeves for unpressurized operation p_e = 0 bar (0 psi). Unit of measurement mm (in)*

G 1, DIN ISO 228/I
- Material: 1.4435 (AISI 316L)
- Weight: 0.21 kg (0.46 lb)
- Order number: 52003978
- Order number: 52011888, approval: with inspection certificate EN 10204 - 3.1 material

NPT 1, ASME B 1.20.1
- Material: 1.4435 (AISI 316L)
- Weight: 0.21 kg (0.46 lb)
- Order number: 52003979
- Order number: 52011889, approval: with inspection certificate EN 10204 - 3.1 material

G 1½, DIN ISO 228/I
- Material: 1.4435 (AISI 316L)
- Weight: 0.54 kg (1.19 lb)
- Order number: 52003980
- Order number: 52011890, approval: with inspection certificate EN 10204 - 3.1 material

NPT 1½, ASME B 1.20.1
- Material: 1.4435 (AISI 316L)
- Weight: 0.54 kg (1.19 lb)
- Order number: 52003981
- Order number: 52011891, approval: with inspection certificate EN 10204 - 3.1 material

More detailed information and documentation are available:
- Product Configurator on the Endress+Hauser website www.endress.com
- Endress+Hauser Sales Organizationwww.addresses.endress.com

14 Technical data

14.1 Input

14.1.1 Measured variable

Density of liquids

14.1.2 Measuring range

Density range: 0.3 to 2 g/cm³

14.2 Output

2-wire pulse (FEL60D) for density measurement
Connection to Density Calculator QML51

14.2.1 Ex connection data

See safety instructions (XA): All data relating to explosion protection are provided in separate Ex documentation and are available from the Downloads area of the Endress+Hauser website. The Ex documentation is supplied as standard with all devices approved for use in explosion hazardous areas.

Ex versions require an Ex barrier or active barrier (e.g. RN22 from Endress+Hauser), for connection to the QML51.

14.3 Environment

14.3.1 Ambient temperature range

−40 to 70 °C (−40 to 158 °F)

The minimum permitted ambient temperature of the plastic housing is limited to −20 °C (−4 °F); 'indoor use' applies to North America.

Outdoor operation in strong sunlight:
- Mount the device in a shaded location
- Avoid direct sunlight, particularly in warmer climatic regions
- Use a weather protection cover, which can be ordered as an accessory

Further information on using the device in hazardous areas and on documentation that is currently available can be found on the Endress+Hauser website: www.endress.com → Downloads.

Hazardous area
In the hazardous area, the permitted ambient temperature can be limited depending on the zones and gas groups. Pay attention to the information in the Ex documentation (XA).

14.3.2 Operating altitude

As per IEC 61010-1 Ed.3:
- Up to 2 000 m (6 600 ft) above sea level
- Can be extended to 3 000 m (9 800 ft) above sea level if overvoltage protection is used

14.3.3 Climate class

As per IEC 60068-2-38 test Z/AD

14.3.4 Degree of protection

Testing according to IEC 60529 and NEMA 250

IP68 test condition: 1.83 m H_2O for 24 h

Housing
See cable entries

Cable entries
- M20 coupling, plastic, IP66/68 NEMA Type 4X/6P
- M20 coupling, nickel-plated brass, IP66/68 NEMA Type 4X/6P
- M20 coupling, 316L, IP66/68 NEMA Type 4X/6P
- M20 coupling, 316L, hygienic, IP66/68/69 NEMA Type 4X/6P
- M20 thread, IP66/68 NEMA Type 4X/6P
- G ½ thread, NPT ½, NPT ¾ IP66/68 NEMA Type 4X/6P

Degree of protection for M12 plug
- When housing is closed and connection cable is plugged in: IP66/67 NEMA Type 4X
- When housing is open or connection cable is not plugged in: IP20, NEMA Type 1

NOTICE
M12 plug: Loss of IP protection class due to incorrect installation!
- ▶ The degree of protection only applies if the connecting cable used is plugged in and screwed tight.
- ▶ The degree of protection only applies if the connecting cable used is specified according to IP67 NEMA Type 4X.

If the "M12 plug" option is selected as the electrical connection, **IP66/67 NEMA Type 4X** applies for all housing types.

14.3.5 Pollution degree

Pollution degree 2

14.4 Process

14.4.1 Process temperature range

0 to 80 °C (32 to 176 °F)

14.4.2 Thermal shock

≤ 120 K/s

14.4.3 Process pressure range

−1 to 25 bar (−14.5 to 362.5 psi) for a maximum of 150 °C (302 °F)

The maximum pressure for the device depends on the lowest-rated element with regard to pressure.

Components are: process connection, optional mounting parts, or accessories.

WARNING

Incorrect design or use of the device may lead to bursting parts!
This may result in severe, possibly irreversible injury to persons and environmental hazards.

- Only operate the device within the specified limits for the components!
- MWP (maximum working pressure): The maximum working pressure is specified on the nameplate. This value refers to a reference temperature of 20 °C (68 °F) and may be present at the device for an unlimited time. Note temperature dependency of MWP. For higher temperatures, refer to the following standards for the permitted pressure values for flanges:EN 1092-1 (materials 1.4435 and 1.4404 are identical with regard to their stability/temperature property and are grouped together in under 13E0 in EN 1092-1 Tab. 18. The chemical composition of the two materials can be identical), ASME B 16.5a, JIS B 2220 (the latest version of the standard applies in each case).
- The Pressure Equipment Directive (2014/68/EU) uses the abbreviation "PS". The abbreviation "PS" corresponds to the maximum working pressure (MWP) of the device
- MWP data that deviate from this is provided in the relevant sections of the Technical Information.

The lowest value from the derating curves of the device and of the selected flange applies in each case.

Devices with CRN approval: Information on the Endress+Hauser website: www.endress.com → Downloads.

14.4.4 Pressure tightness

Up to vacuum

14.5 Additional technical data

Current Technical Information: Endress+Hauser website: www.endress.com → Downloads.

Index

A
About this document
  Symbols – description 5

C
CE mark 9

D
Declaration of Conformity 9
Disposal 31
Document
  Function 5
Document function 5

E
Electrical connection
  Terminal assignment 22

F
Field of application
  Residual risks 8

I
Installation
  Installation requirements 13
Intended use 7

O
Operational safety 8

P
Post-connection check 26
Product description
  Product design 9
Product safety 9

R
Repair concept 30
Requirements for personnel 7
Return 31

S
Securing screw 22
Spare parts 31
Symbols for certain types of information and graphics . 5
Symbols in graphics 6

T
Technical data
  Measured variables
    Measuring ranges 35
  Process range 37
Transporting
  Handling 13

U
Use of the device
  see Intended use
Using the devices
  Borderline cases 8
  Incorrect use 8

W
Workplace safety 8

71783291

www.addresses.endress.com

Endress+Hauser

People for Process Automation