KA01559F/00/EN/05.26-00
71783251
2026-09-11

Brief Operating Instructions
Liquiphant FTL64

Vibronic
HART
Level switch for liquids in high-temperature applications

These Brief Operating Instructions are not a substitute for the Operating Instructions. For further information on the product, see:

- www.endress.com/deviceviewer
- Smartphone/tablet: Endress+Hauser Operations app

Endress+Hauser
People for Process Automation

1 Related documentation

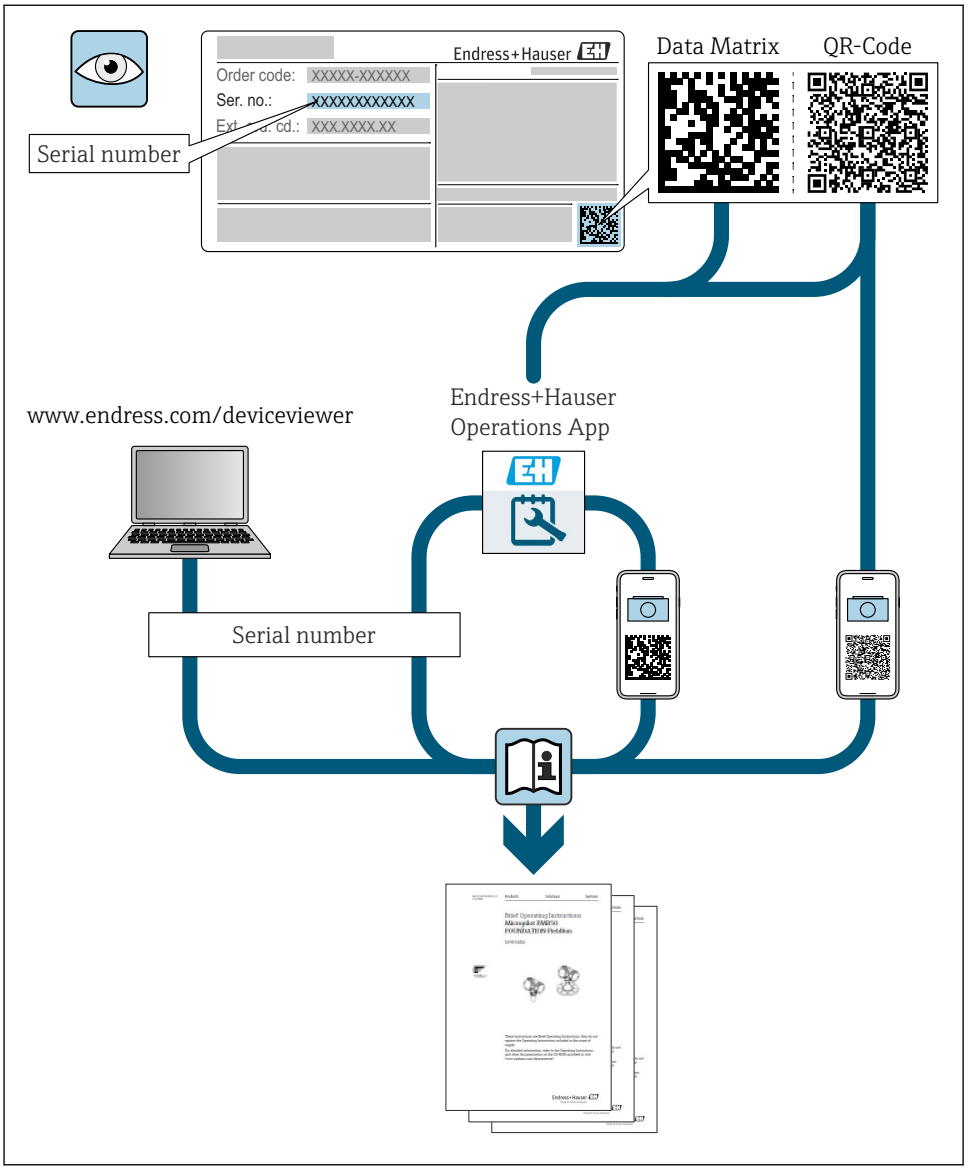

A0023555

2 About this document

2.1 Symbols

2.1.1 Safety symbols

DANGER
This symbol alerts you to a dangerous situation. Failure to avoid this situation will result in serious or fatal injury.

WARNING
This symbol alerts you to a potentially dangerous situation. Failure to avoid this situation can result in serious or fatal injury.

CAUTION
This symbol alerts you to a potentially dangerous situation. Failure to avoid this situation can result in minor or medium injury.

NOTICE
This symbol alerts you to a potentially harmful situation. Failure to avoid this situation can result in damage to the product or something in its vicinity.

2.1.2 Electrical symbols

Ground connection
Grounded clamp, which is grounded via a grounding system.

Protective earth (PE)
Ground terminals, which must be grounded prior to establishing any other connections. The ground terminals are located on the inside and outside of the device.

2.1.3 Tool symbols

Flat-blade screwdriver

Allen key

Open-ended wrench

2.1.4 Communication-specific symbols

Bluetooth® wireless technology
Wireless data transmission between devices over a short distance via radio technology.

2.1.5 Symbols for certain types of Information

Permitted
Procedures, processes or actions that are permitted.

Forbidden
Procedures, processes or actions that are forbidden.

Tip
Indicates additional information

Reference to documentation

Reference to another section

1., 2., 3. Series of steps

2.1.6 Symbols in graphics

A, B, C ... View

1, 2, 3 ... Item numbers

Hazardous area

Safe area (non-hazardous area)

2.1.7 Registered trademarks

HART®
Registered trademark of the FieldComm Group, Austin, Texas, USA

Bluetooth®
The *Bluetooth®* word mark and logos are registered trademarks owned by the Bluetooth SIG, Inc. and any use of such marks by Endress+Hauser is under license. Other trademarks and trade names are those of their respective owners.

Apple®
Apple, the Apple logo, iPhone, and iPod touch are trademarks of Apple Inc., registered in the U.S. and other countries. App Store is a service mark of Apple Inc.

Android®
Android, Google Play and the Google Play logo are trademarks of Google Inc.

3 Basic safety instructions

3.1 Requirements for the personnel

The personnel must fulfill the following requirements for its tasks:
- Trained, qualified specialists must have a relevant qualification for this specific function and task.
- Are authorized by the plant owner/operator.
- Are familiar with federal/national regulations.
- Before starting work, read and understand the instructions in the manual and supplementary documentation as well as the certificates (depending on the application).
- Follow instructions and comply with basic conditions.

3.2 Intended use

The device described in this manual is intended only for the level measurement of liquids.

Do not exceed or drop below the relevant limit values for the device
See the Technical Documentation

Incorrect use
The manufacturer is not liable for damage caused by improper or non-designated use.

Avoid mechanical damage:
- Do not touch or clean device surfaces with pointed or hard objects.

Clarification for borderline cases:
- For special media and fluids for cleaning, Endress+Hauser is glad to provide assistance in verifying the corrosion resistance of fluid-wetted materials, but does not accept any warranty or liability.

Residual risks
Due to the transfer of heat from the process and power dissipation within the electronics, the temperature of the housing may increase to up to 80 °C (176 °F) during operation. When in operation, the sensor can reach a temperature close to the medium temperature.

Danger of burns from contact with surfaces!
- In the event of elevated fluid temperatures, ensure protection against contact to prevent burns.

3.3 Workplace safety

For work on and with the device:
- Wear the required personal protective equipment according to federal/national regulations.

3.4 Operational safety

Damage to the device!
- Operate the device only if it is in proper technical condition, free from errors and faults.
- The operator is responsible for the trouble-free operation of the device.

Configuration, testing and maintenance work on the device

Process safety may be at risk during configuration, testing and maintenance work on the device.
- Alternative supervisory measures must be taken to guarantee the operational safety and process safety.

Modifications to the device

Unauthorized modifications to the device are not permitted and can lead to unforeseeable dangers.
- If modifications are nevertheless required, consult Endress+Hauser.

Repair

To ensure continued operational safety and reliability:
- Only perform repair work on the device if this is expressly permitted.
- Observe federal/national regulations pertaining to the repair of an electrical device.
- Use original spare parts and accessories from Endress+Hauser only.

Hazardous area

To eliminate danger to persons or the facility when the device is used in the hazardous area (e.g. explosion protection):

- ▶ Check the nameplate to verify if the device ordered can be put to its intended use in the hazardous area.
- ▶ Comply with the instructions in the separate supplementary documentation, which is an integral part of this manual.

3.5 Product safety

This state-of-the-art device is designed and tested in accordance with good engineering practice to meet operational safety standards. It left the factory in a condition in which it is safe to operate.

It meets general safety standards and legal requirements. It also complies with the EU directives listed in the device-specific EU declaration of conformity. The manufacturer confirms this by affixing the CE mark.

3.6 Functional Safety SIL (optional)

The Functional Safety Manual must be strictly observed for devices that are used in functional safety applications.

3.7 IT security

The manufacturer warranty is valid only if the product is installed and used as described in the Operating Instructions. The product features security mechanisms to protect it against any inadvertent changes to the settings. Security measures, which provide additional protection for the product and associated data transfer, must be implemented by the operators themselves in line with their security standards.

3.8 Device-specific IT security

The device offers specific functions to support protective measures by the operator. These functions can be configured by the user and guarantee greater in-operation safety if used correctly. An overview of the most important functions is provided in the following section.

- Write protection via hardware write protection switch
- Access code to change user role (applies to operation via display, Bluetooth® wireless technology or FieldCare, DeviceCare, asset management tools (e.g. AMS, PDM)

4 Incoming acceptance and product identification

4.1 Incoming acceptance

On receipt of the delivery:

1. Check the packaging for damage.
   ↳ Report all damage immediately to the manufacturer.
   Do not install damaged components.
2. Check the scope of delivery using the delivery note.
3. Compare the data on the nameplate with the order specifications on the delivery note.
4. Check the technical documentation and all other necessary documents, e.g. certificates, to ensure they are complete.

If one of the conditions is not satisfied, contact the manufacturer.

4.2 Product identification

The following options are available for identification of the device:
- Nameplate specifications
- Order code with breakdown of the device features on the delivery note
- Enter the serial numbers from the nameplates in *Device Viewer* (www.endress.com/deviceviewer): all the information about the device is displayed.

4.2.1 Nameplate

Do you have the correct device?

The nameplate provides you with the following information on the device:
- Manufacturer identification, device designation
- Order code
- Extended order code
- Serial number
- Tag name (TAG) (optional)
- Technical values such as supply voltage, current consumption, ambient temperature, communication-specific data (optional)
- Degree of protection
- Approvals with symbols
- Reference to Safety Instructions (XA) (optional)

▶ Compare the information on the nameplate with the order.

4.2.2 Manufacturer address

Endress+Hauser SE+Co. KG
Hauptstraße 1
79689 Maulburg, Germany

Place of manufacture: See nameplate.

4.3 Storage and transport

4.3.1 Storage conditions

Use original packaging.

Storage temperature

−40 to +80 °C (−40 to +176 °F)
Optional: −50 °C (−58 °F), −60 °C (−76 °F)

4.3.2 Transporting the device

- Transport the device to the measuring point in the original packaging
- Hold the device by the housing, temperature spacer, flange or extension pipe
  Take suitable measures to protect the coating!
- Do not bend, shorten or extend the tuning fork

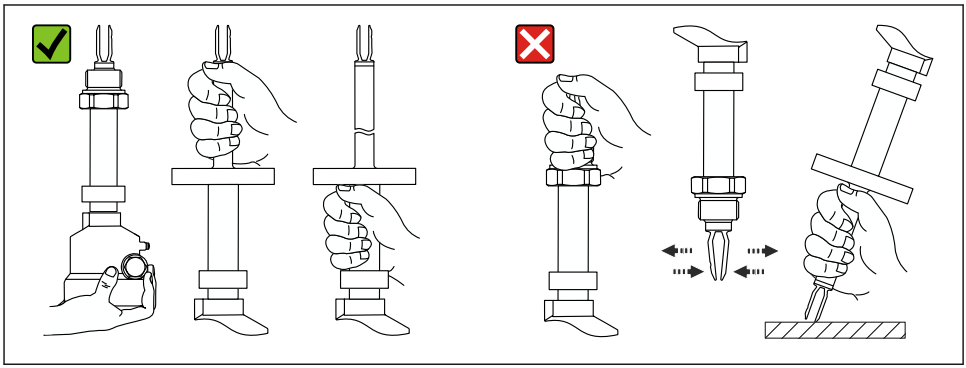

1 *Handling the device during transportation*

5 Installation

Mounting instructions
- Any orientation for compact version or version with a pipe length up to approx. 500 mm (19.7 in)
- Vertical orientation from above for device with long pipe
- Minimum distance between the vibrating fork and the tank wall or pipe wall: 10 mm (0.39 in)

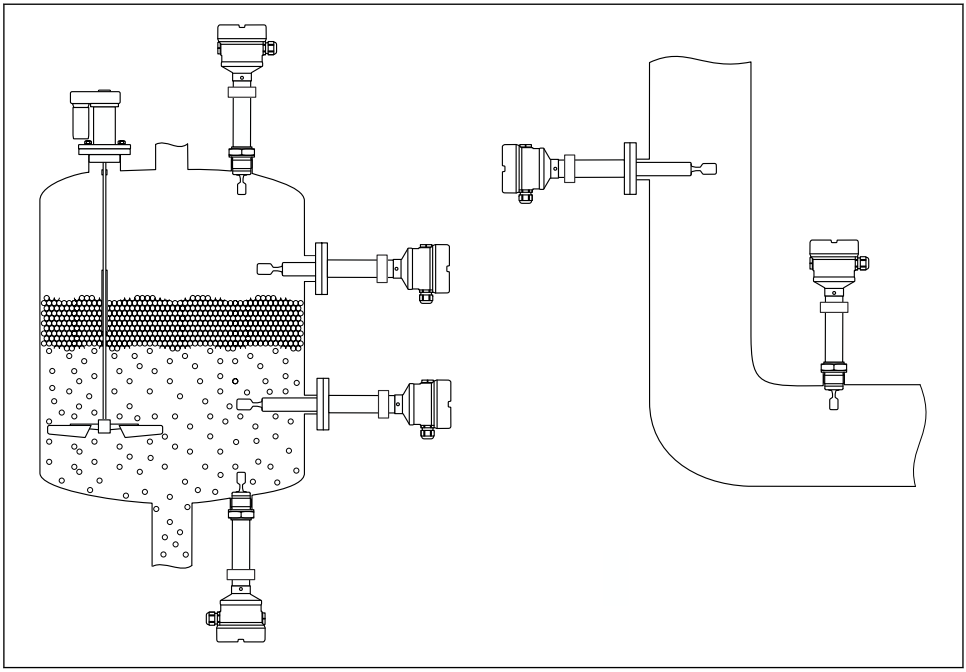

A0042329

2 *Installation examples for a vessel, tank or pipe*

5.1 Installation requirements

NOTICE

Scratches or impacts damage the coated surface of the device.

- Ensure the device is handled properly and professionally during all mounting work.

5.1.1 Pay attention to the temperature for devices with a PFA coating (conductive)

The difference in temperature between the outer and inner side of the flange may not exceed 60 °C (140 °F).

If necessary, use external insulation.

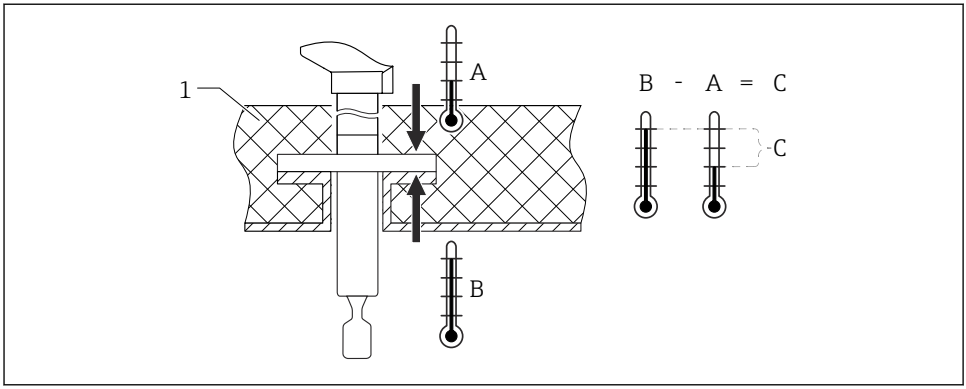

A0042298

3 *Difference in temperature between outer and inner side of flange*

1 Insulation
A Temperature of flange, outer side
B Temperature of flange, inner side, for PFA (conductive) maximum 230 °C (446 °F)
C Difference in temperature for PFA (conductive) maximum 60 °C (140 °F)

5.1.2 Taking the switch point into consideration

The following are typical switch points, depending on the orientation of the level switch

Water +23 °C (+73 °F)

Minimum distance between the tuning fork and the tank wall or pipe wall:
10 mm (0.39 in)

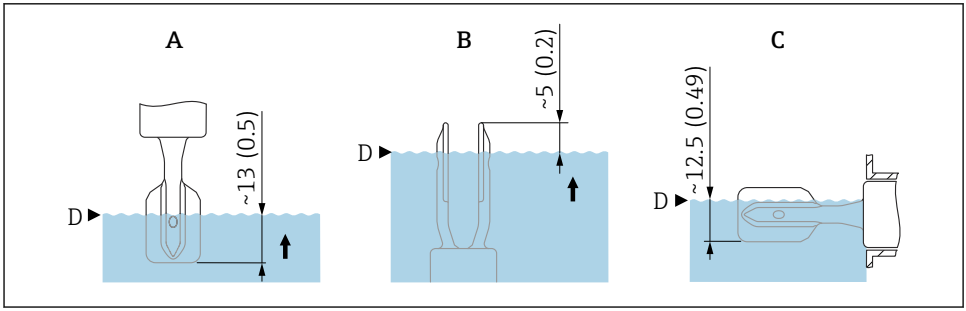

A0044069

4 *Typical switch points. Unit of measurement mm (in)*

A Installation from above
B Installation from below
C Installation from the side
D Switch point

5.1.3 Take viscosity into consideration

Viscosity values
- Low viscosity : < 2 000 mPa·s
- High viscosity: > 2 000 to 10 000 mPa·s

Low viscosity

Low viscosity, e.g. water: < 2 000 mPa·s

It is permitted to position the tuning fork within the installation socket.

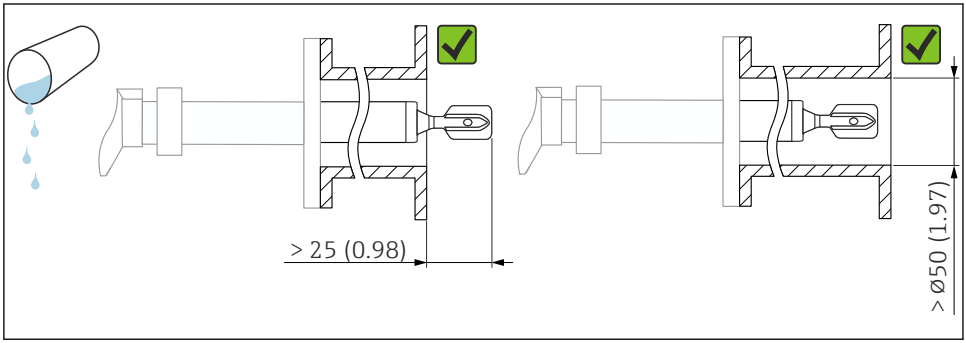

5 *Installation example for low-viscosity liquids. Unit of measurement mm (in)*

High viscosity

NOTICE

Highly viscous liquids may cause switching delays.
- ▶ Make sure that the liquid can run off the tuning fork easily.
- ▶ Deburr the socket surface.

High viscosity, e.g. viscous oils: ≤ 10 000 mPa·s

The tuning fork must be located outside the installation socket!

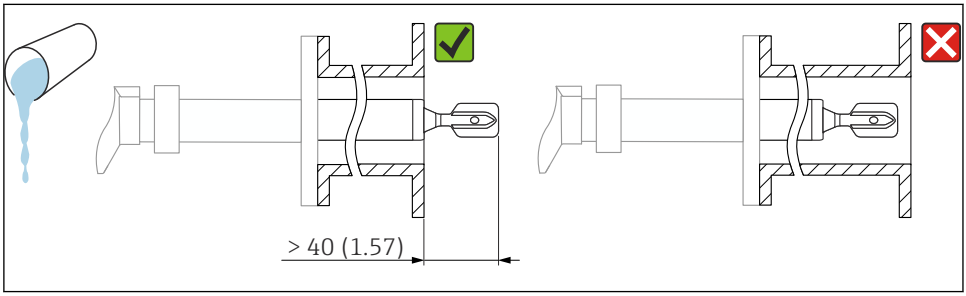

6 *Installation example for a highly viscous liquid. Unit of measurement mm (in)*

5.1.4 Avoid buildup

- Use short installation sockets to ensure that the tuning fork projects freely into the vessel
- Leave sufficient distance between the buildup expected on the tank wall and the tuning fork

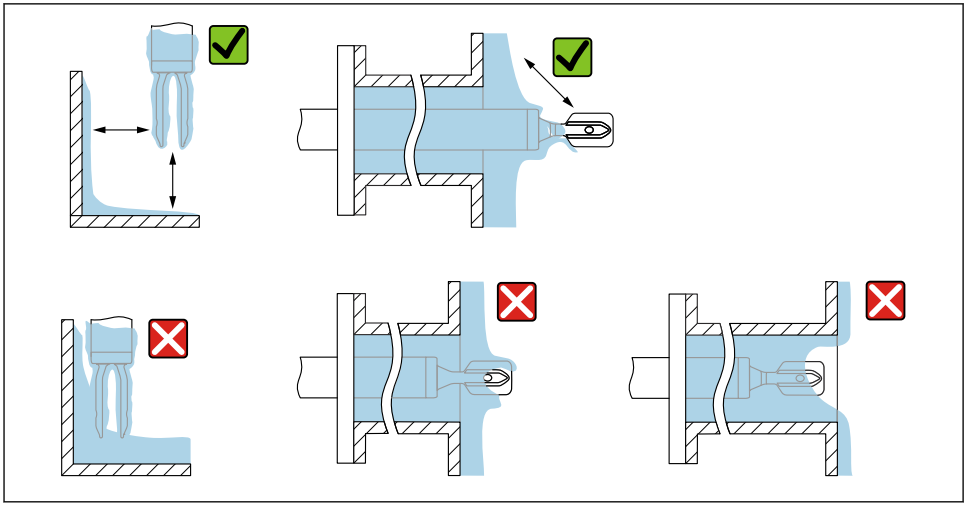

7 *Installation examples for a highly viscous process medium*

5.1.5 Take clearance into consideration

Allow sufficient space outside the tank for mounting, connection and settings involving the electronic insert.

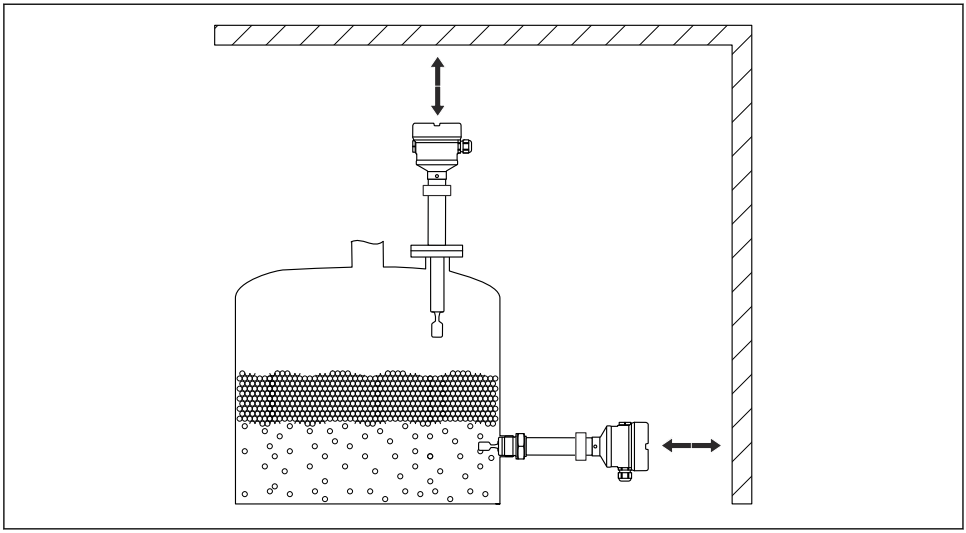

8 *Take clearance into consideration*

5.1.6 Support the device

NOTICE

If the device is supported incorrectly, shocks and vibrations can damage the coated surface.

- Use suitable supports only.

Support the device in the event of severe dynamic load. Maximum lateral loading capacity of the pipe extensions and sensors: 75 Nm (55 lbf ft).

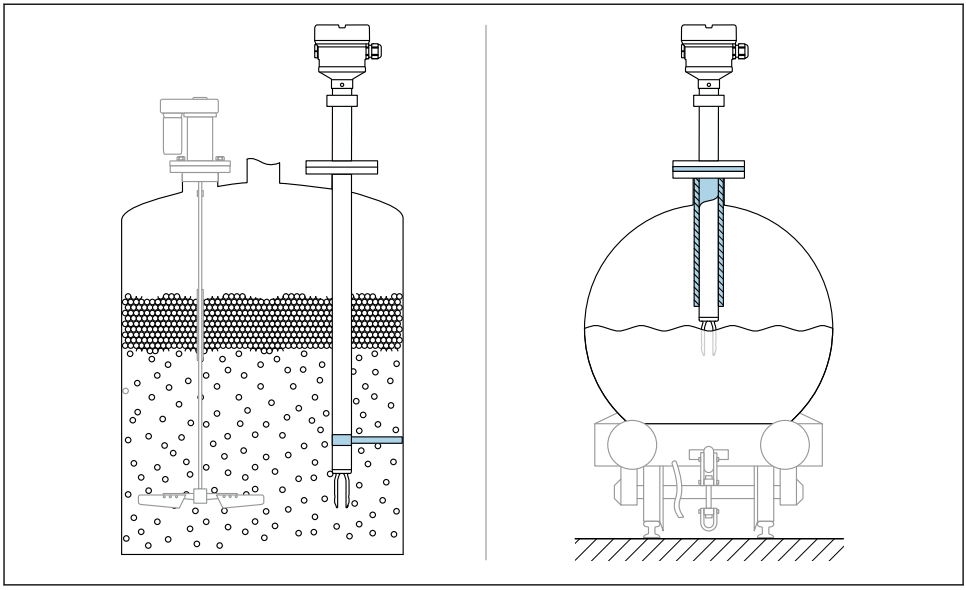

9 Examples of support in the event of dynamic load

Marine approval: In the case of pipe extensions or sensors longer than 1 600 mm (63 in), a support is needed at least every 1 600 mm (63 in).

5.2 Installing the device

5.2.1 Installation

Align the vibrating fork using the marking.

The vibrating fork can be aligned using the marking in such a way that the medium drains off easily and buildup is avoided.

- Markings for threaded connections: Circle (material specification/thread designation opposite)
- Markings for flange connections: line or double line

In addition, the threaded connections have a matrix code that is **not** used for alignment.

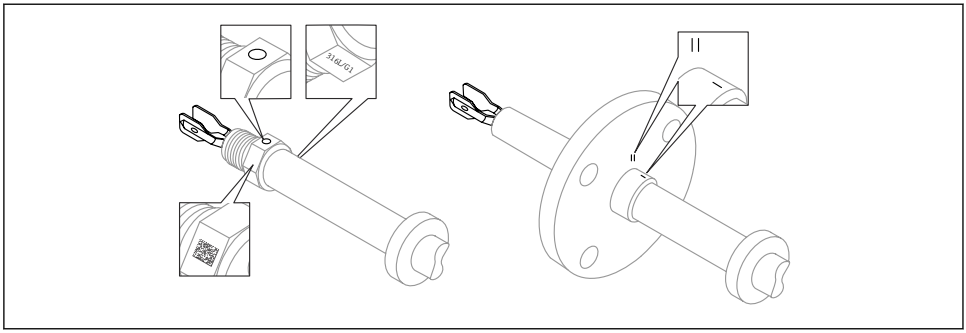

10 *Position of the vibrating fork when installed horizontally in the vessel using the marking*

Installing the device in piping

- Flow velocity up to 5 m/s with a viscosity of 1 mPa·s and density of 1 g/cm³ (62.4 lb/ft³) (SGU).
  Check for correct functioning in the event of other process medium conditions.
- The flow will not be significantly impeded if the tuning fork is correctly aligned and the marking is pointing in the direction of flow.
- The marking is visible when installed

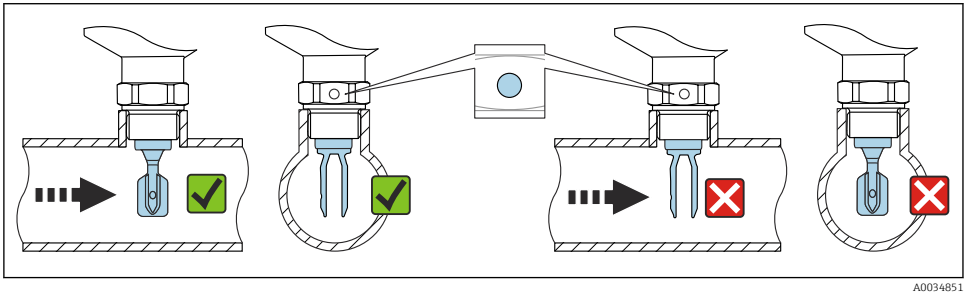

11 *Installation in pipes (take fork position and marking into consideration)*

Screwing in the device

- Turn by the hex bolt only, 15 to 30 Nm (11 to 22 lbf ft)
- Do not turn at the housing!

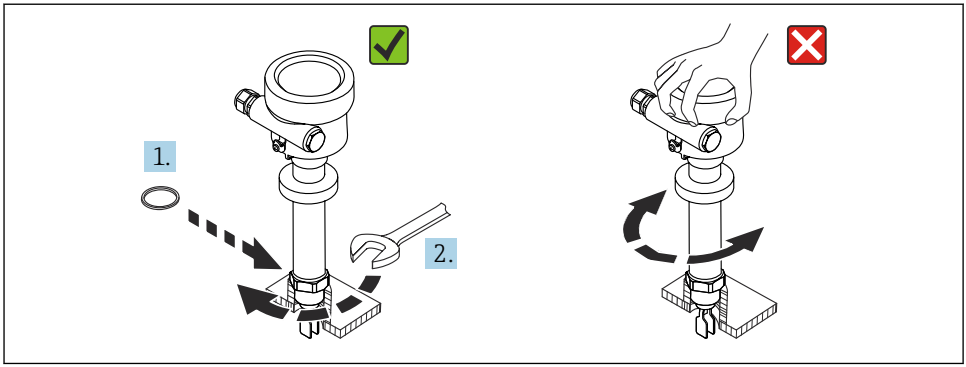

A0042423

12 *Screwing in the device*

Aligning the cable entry

All housings can be aligned. Forming a drip loop on the cable prevents moisture from entering the housing.

Housing without set screw

The device housing can be rotated up to 350°.

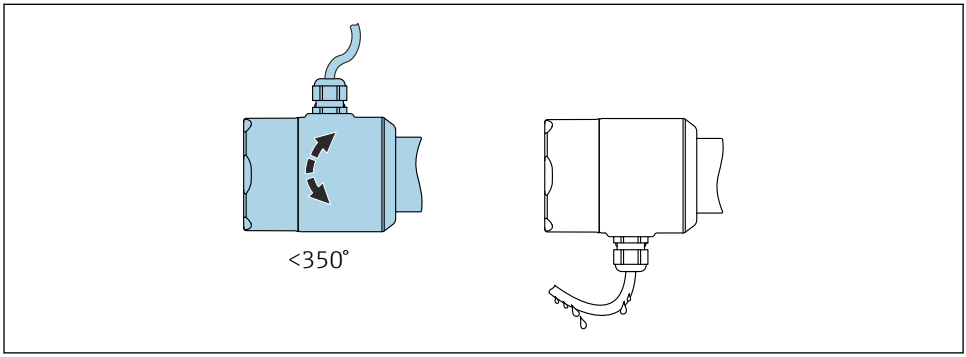

A0052359

13 *Housing without set screw; form a drip loop on the cable.*

Housing with locking screw

NOTICE

The locking screw is not sufficiently tightened when the device is delivered.

The housing may rotate and become loose due to vibration.

- Tighten the locking screw to 3.5 Nm (2.58 lbf ft).

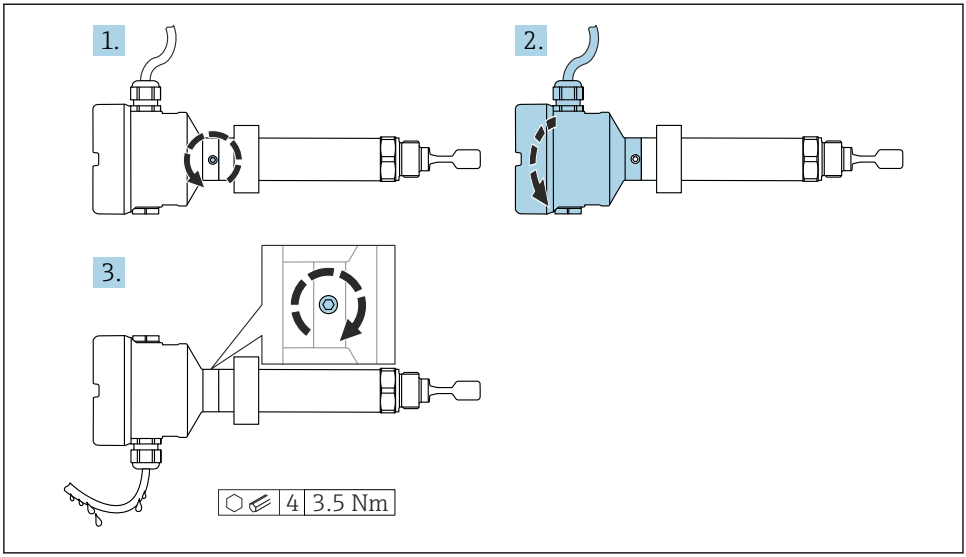

14 *Housing with external locking screw; form a drip loop on the cable*

1. Loosen the external locking screw (maximum 1.5 turns).
2. Turn the housing and align the cable entry.
3. Tighten the external locking screw.

Rotating the housing

The housing can be rotated up to 380° by loosening the locking screw.

NOTICE

The housing cannot be completely unscrewed.

- Loosen the external locking screw by a maximum of 1.5 turns. If the screw is turned further or completely removed (beyond the screw lifting point), small parts (counter disk) may become loose and fall out.
- Tighten the locking screw (hex socket 4 mm (0.16 in)) to 3.5 Nm (2.58 lbf ft) ±0.3 Nm (±0.22 lbf ft).

Closing the housing covers

NOTICE

Thread and housing cover damaged from dirt and fouling!

- Remove dirt (e.g. sand) on the thread of the covers and housing.
- If you continue to encounter resistance when closing the cover, check the thread again for fouling.

Housing thread
The threads of the electronics and connection compartment can be coated with an anti-friction coating.
The following applies for all housing materials:
Do not lubricate the housing threads.

Turning the display module

WARNING

Opening the device in hazardous environments when the supply voltage is connected
Explosion hazard due to live electrical energy.

- Do not open devices with Ex d or Ex t approval as long as the supply voltage is connected.
- Before opening the device, switch off the supply voltage and ensure no voltage is present.

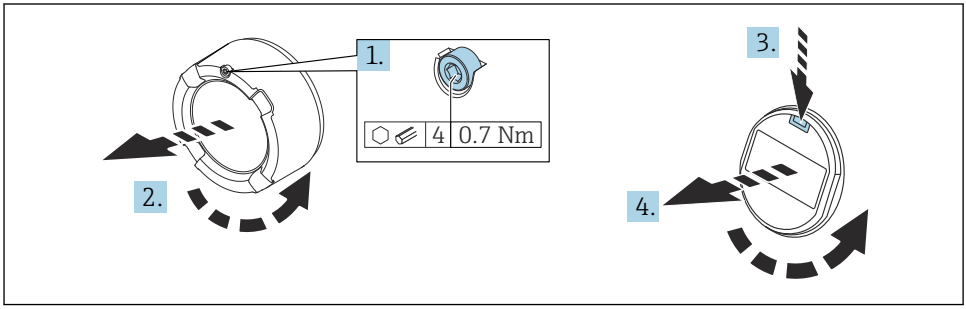

A0038224

1. If fitted: release the screw of the cover lock for the electronics compartment cover using the Allen key.
2. Unscrew the cover from the housing and inspect the cover seal.
3. Press the release mechanism and remove the display module.
4. Turn the display module to the desired position: maximum 4 × 90 ° in each direction.
5. Insert the display module into the desired position until it clicks into place.
6. Screw the cover tightly back onto the housing.
7. If fitted: tighten the screw of the cover lock using the Allen key 0.7 Nm (0.52 lbf ft) ±0.2 Nm (±0.15 lbf ft).

In the case of a dual-compartment housing, the display can be mounted in the electronics compartment as well as in the connection compartment.

Changing the installation position of the display module

The installation position of the display can be changed in the case of the dual compartment housing, L-form.

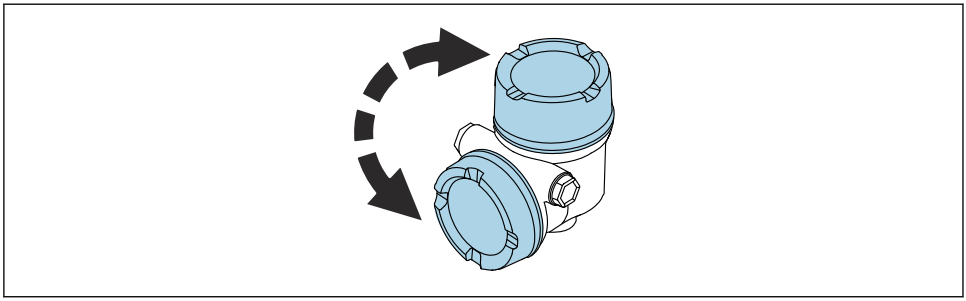

A0048401

WARNING

Opening the device in hazardous environments when the supply voltage is connected

Explosion hazard due to live electrical energy.

- ▶ Do not open devices with Ex d or Ex t approval as long as the supply voltage is connected.
- ▶ Before opening the device, switch off the supply voltage and ensure no voltage is present.

1 →

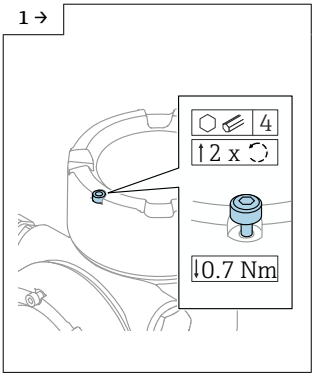

A0046831

- ▶ If fitted: release the screw of the cover lock for the display cover using the Allen key.

2 →

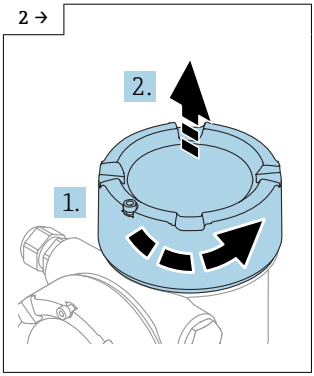

A0046832

- ▶ Unscrew the display cover and check the cover seal.

3 →

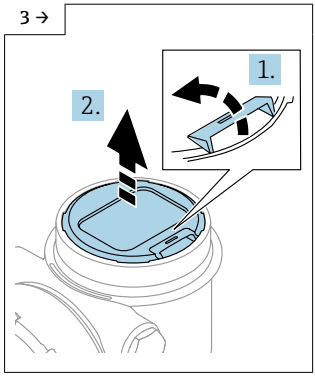

A0046833

- ▶ Press the release mechanism, remove the display module.

4 →

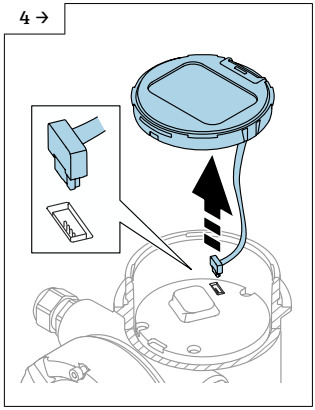

A0046834

- Release the plug connection.

5 →

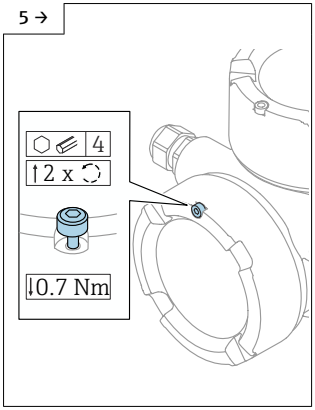

A0046923

- If fitted: release the screw of the cover lock for the connection compartment cover using the Allen key.

6 →

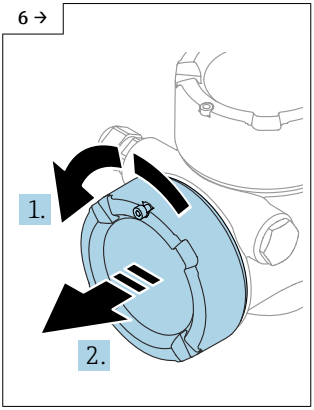

A0046924

- Unscrew the connection compartment cover, check the cover seal. Screw this cover onto the electronics compartment instead of the display cover. If fitted: tighten the screw of the cover lock using the Allen key

7 →

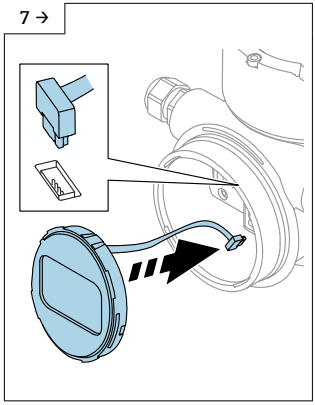

A0048406

- Plug in the connection for the display module in the connection compartment.
- Insert the display module into the desired position until it clicks into place.

8

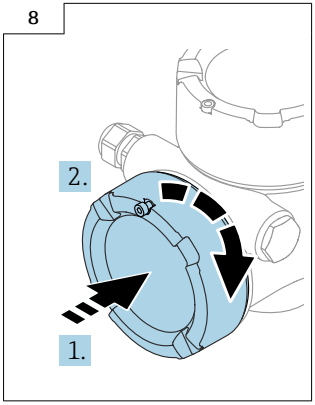

A0046928

- Screw the display cover firmly back onto the housing. If fitted: tighten the screw of the cover lock using the Allen key 0.7 Nm (0.52 lbf ft).

6 Electrical connection

6.1 Connecting requirements

6.1.1 Cover with securing screw

The cover is locked by a securing screw in devices for use in hazardous areas with certain explosion protection.

NOTICE

If the securing screw is not positioned correctly, the cover cannot provide secure sealing.

- ▶ Open the cover: slacken the screw of the cover lock with a maximum of 2 turns so that the screw does not fall out. Fit the cover and check the cover seal.
- ▶ Close the cover: screw the cover securely onto the housing, making sure that the securing screw is positioned correctly. There should not be any gap between the cover and housing.

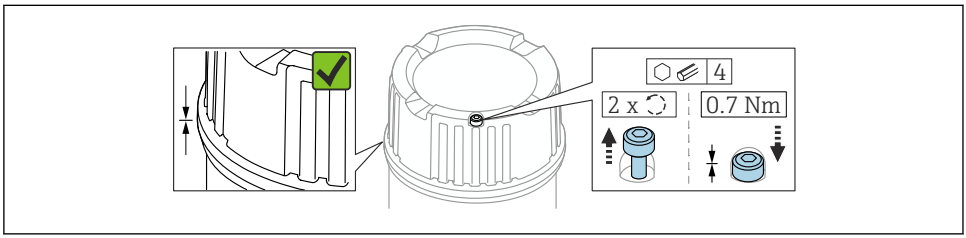

15 *Cover with securing screw*

6.1.2 Potential equalization

WARNING

Ignitable sparks or excessively high surface temperatures.

Explosion hazard!

- ▶ Please refer to the separate documentation on applications in hazardous areas for the safety instructions.

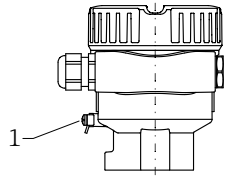

A0045830

1 Ground terminal for connecting the potential matching line (example)

If necessary, the potential matching line can be connected to the external ground terminal of the transmitter before the device is connected.

For optimum electromagnetic compatibility:
- Potential matching line as short as possible
- Observe a cross-section of at least 2.5 mm^2 (14 AWG)

6.2 Connecting the device

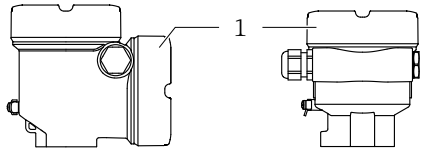

A0046355

1 Connection compartment cover

Housing thread
The threads of the electronics and connection compartment can be coated with an anti-friction coating.
The following applies for all housing materials:
Do not lubricate the housing threads.

6.2.1 Supply voltage

- U = DC 10.5 to 35 V (Ex d, Ex e, not Ex)
- U = DC 10.5 to 30 V (Ex i)
- Rated current: 4 to 20 mA HART

- The power unit must be tested to ensure it meets safety requirements (e.g. PELV, SELV, Class 2) and must comply with the relevant protocol specifications.
- Comply with the following according to IEC 61010-1: provide a suitable circuit breaker for the device.

Depending on the supply voltage at the moment the device is switched on, the backlight is switched off (supply voltage < 13 V).

6.2.2 Terminals

- Supply voltage and internal ground terminal: 0.5 to 2.5 mm^2 (20 to 14 AWG)
- External ground terminal: 0.5 to 4 mm^2 (20 to 12 AWG)

6.2.3 Cable specification

The cable outer diameter depends on the cable entry used.
Cable outer diameter:
- Plastic gland: Ø5 to 10 mm (0.2 to 0.38 in)
- Nickel-plated brass gland: Ø7 to 10.5 mm (0.28 to 0.41 in)
- Stainless steel gland: Ø7 to 12 mm (0.28 to 0.47 in)

6.2.4 4 to 20 mA HART

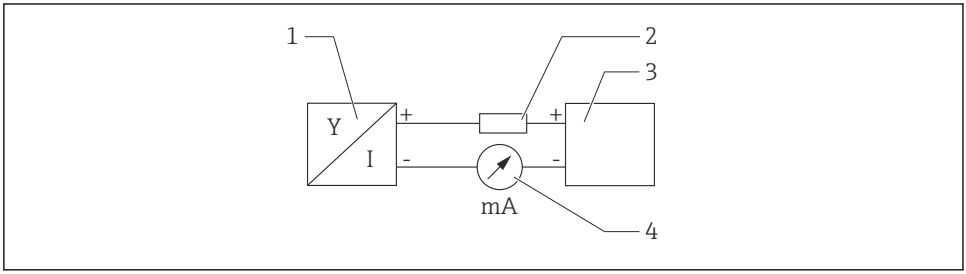

A0028908

16 Block diagram of HART connection

1 Device with HART communication
2 HART communication resistor
3 Power supply
4 Multimeter or ammeter

The HART communication resistor of 250 Ω in the signal line is always necessary in the case of a low-impedance power supply.

Take the voltage drop into consideration:
Maximum 6 V for a 250 Ω communication resistor

6.2.5 Overvoltage protection

Devices without optional overvoltage protection

Equipment from Endress+Hauser fulfills the requirements of the product standard IEC 61326-1 (Table 2 Industrial Environment).

Depending on the type of connection (DC power supply, input line, output line) and in accordance with IEC 6132 6-1, different test levels are used to prevent transient overvoltages (IEC 61000-4-5 Surge): Test level for DC power supply lines and IO lines: 1 000-V-wire to ground

Devices with optional overvoltage protection

- Spark-over voltage: min. DC 400 V
- Tested in accordance with:
  - IEC 60079-14 Subsection 12.3
  - IEC 60060-1 Section 7
- Nominal discharge current: 10 kA

NOTICE

The device can be damaged by excessively high electrical voltages.

▶ Always ground the device with integrated overvoltage protection.

Overvoltage category

Overvoltage category II

6.2.6 Wiring

⚠ WARNING

Supply voltage might be connected!

Risk of electric shock and/or explosion!

▶ If the device is used in hazardous areas, make sure to comply with national standards and the specifications in the Safety Instructions (XAs). The specified cable gland must be used.
▶ The supply voltage must match the specifications on the nameplate.
▶ Switch off the supply voltage before connecting the device.
▶ If necessary, the potential matching line can be connected to the outer ground terminal of the transmitter before the device is connected.
▶ A suitable circuit breaker should be provided for the device in accordance with IEC 61010.
▶ The cables must be adequately insulated, with due consideration given to the supply voltage and the overvoltage category.
▶ The connecting cables must offer adequate temperature stability, with due consideration given to the ambient temperature.
▶ Only operate the device with the covers closed.

1. De-energize the system.
2. Release the cover lock (if provided).
3. Unscrew the cover.
4. Guide the cables into the cable glands or cable entries. Use a suitable tool with width across flats AF24/25 (8 Nm (5.9 lbf ft)) for the M20 cable gland.
5. Connect the cables.
6. Tighten the cable glands or cable entries so that they are leak-tight. Counter-tighten the housing entry.
7. Screw the cover securely back onto the connection compartment.
8. If provided: tighten the screw of the cover lock using the Allen key 0.7 Nm (0.52 lbf ft) ±0.2 Nm (0.15 lbf ft).

6.2.7 Terminal assignment

Single compartment housing

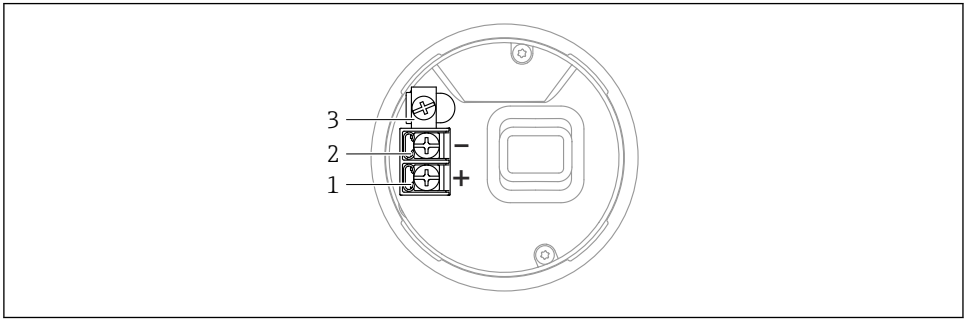

A0042594

17 Connection terminals and ground terminal in the connection compartment, single compartment housing

1 *Positive terminal*
2 *Negative terminal*
3 *Internal ground terminal*

Dual-compartment housing, L-form

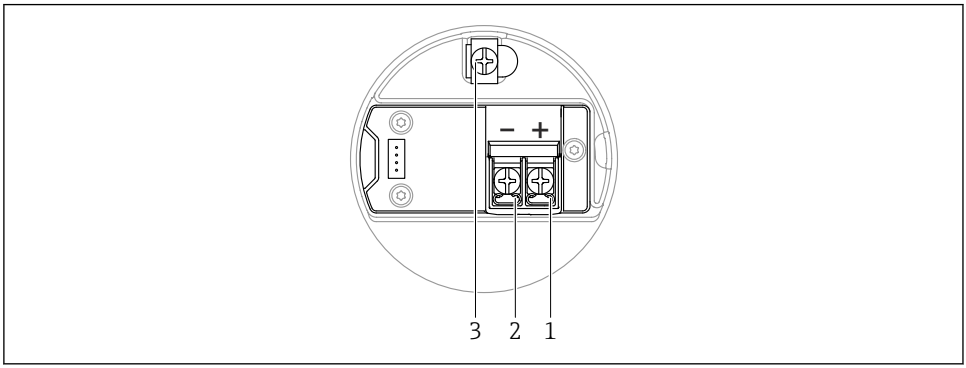

A0045842

18 Connection terminals and ground terminal in the connection compartment, dual-compartment housing, L-form

1 *Plus terminal*
2 *Minus terminal*
3 *Internal ground terminal*

6.2.8 Cable entries

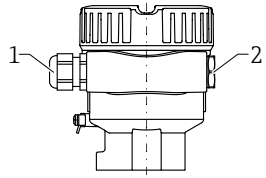

A0045831

19 Example

1 Cable entry
2 Blind plug

The type of cable entry depends on the device version ordered.

6.2.9 Available device plugs

In the case of devices with a plug, it is not necessary to open the housing for connection purposes.

Use the enclosed seals to prevent the penetration of moisture into the device.

Various M12 sockets are available as accessories for devices with M12 plugs.

For more details, see the "Accessories" section.

M12 plug

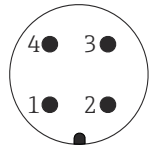

A0011175

20 View of the connection on the device

1 Signal +
2 Not used
3 Signal –
4 Ground

6.3 Ensuring the degree of protection

6.3.1 Degree of protection

Testing according to IEC 60529 and NEMA 250

IP68 test condition: 1.83 m H_2O for 24 h

Housing
See cable entries

Cable entries
- M20 coupling, plastic, IP66/68 NEMA Type 4X/6P
- M20 coupling, nickel-plated brass, IP66/68 NEMA Type 4X/6P
- M20 coupling, 316L, IP66/68 NEMA Type 4X/6P
- M20 thread, IP66/68 NEMA Type 4X/6P
- G ½ thread, NPT ½ , IP66/68 NEMA Type 4X/6P

Degree of protection for M12 plug
- When housing is closed and connecting cable is plugged in: IP66/67 NEMA Type 4X
- When housing is open or connecting cable is not plugged in: IP20, NEMA Type 1

NOTICE

M12 plug: Loss of IP protection class due to incorrect installation!
- ▶ The degree of protection only applies if the connecting cable used is plugged in and screwed tight.
- ▶ The degree of protection only applies if the connecting cable used is specified according to IP67 NEMA Type 4X.

If the "M12 plug" option is selected as the electrical connection, **IP66/67 NEMA Type 4X** applies for all housing types.

7 Operation options

For additional information about the connection, see the Operating Instructions for the device. Documentation currently available on the Endress+Hauser- website: www.endress.com → Downloads.

7.1 Overview of operation options

- Operation via operating keys and DIP switches on the electronic insert
- Operation via optical operating keys on the device display (optional)
- Operation via Bluetooth® wireless technology (with optional device display, including Bluetooth® wireless technology) with SmartBlue app, Field Xpert or DeviceCare
- Operation via operating tool (Endress+Hauser FieldCare/DeviceCare, handheld terminal, AMS, PDM, ...)

7.2 FEL60H electronic insert

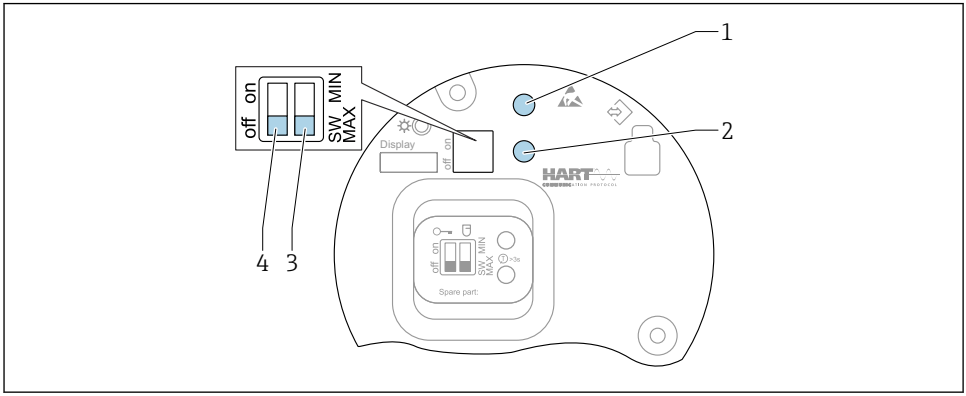

A0046129

21 Operating keys and DIP switch on FEL60H electronic insert

1 Operating key for reset password
1+2 Operating keys for device reset (as-delivered state)
2 Operating key for Proof test
3 DIP switch for safety function
4 DIP switch for locking and unlocking the device

1: Operating key for reset password:
- For login via Bluetooth® wireless technology
- For Maintenance user role

1 + 2: Operating keys for resetting the device:
- Reset the device to the order configuration
- Press both keys 1 + 2 simultaneously

2: Operating key for Proof test:
- The output changes from the OK status to demand mode
- Press the key for > 3 s

3: DIP switch for safety function:
- SW: When the switch is set to "SW", the MIN or MAX setting is defined by the software (MAX = default value)
- MIN: In the MIN switch position, the value is permanently set to MIN irrespective of the software

4: Overview of the operating keys and DIP switch functions:
- Switch position on: Device locked
- Switch position off: Device unlocked

The minimum detection and maximum detection operating modes can be switched directly on the electronic insert:
- MIN (minimum detection): when the vibrating fork is uncovered, the output switches to demand mode, e.g. use to prevent pumps from running dry
- MAX (maximum detection): when the vibrating fork is covered, the output switches to demand mode, e.g. use as overfill protection system

The setting of the DIP switches on the electronic insert has priority over the settings made via other operation methods (e.g. FieldCare/DeviceCare).

Density switchover: A density preset can be ordered as an option or configured via the display, Bluetooth® wireless technology and HART.

7.3 Access to the operating menu via local display

7.3.1 Device display (optional)

Possible to operate the optical operating keys through the cover. No need to open the device.

Backlighting is switched on or off depending on the supply voltage and the current consumption.

The device display is optionally available with Bluetooth® wireless technology.

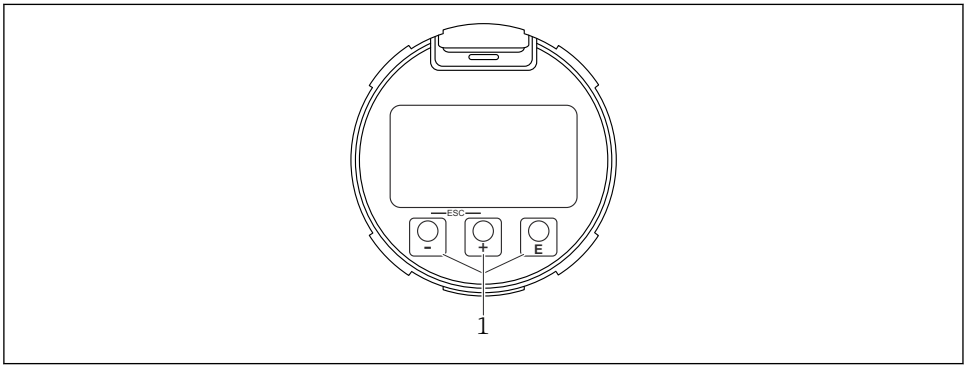

A0039284

22 *Graphic display with optical operating keys (1)*

7.3.2 Operation via Bluetooth® wireless technology (optional)

Prerequisite
- Device with device display including Bluetooth® wireless technology
- Smartphone or tablet with Endress+Hauser SmartBlue app or PC with DeviceCare from version 1.07.05 or Field Xpert SMT70

The connection has a range of up to 25 m (82 ft). The range can vary depending on environmental conditions such as attachments, walls or ceilings.

The operating keys on the display are locked as soon as a Bluetooth® connection is established.

An available Bluetooth® connection is indicated by a flashing Bluetooth symbol.

If the Bluetooth® display is removed from one device and installed in another device.
- All login data are stored only in the Bluetooth® display and not in the device.
- The password changed by the user is also stored in the Bluetooth® display.

Special Documentation SD02530P

Operation via SmartBlue app

The device can be operated and configured with the SmartBlue App.

- The SmartBlue app must be downloaded onto a mobile device for this purpose
- For information on the compatibility of the SmartBlue app with mobile devices, see **Apple App Store (iOS devices)** or **Google Play Store (Android devices)**
- Incorrect operation by unauthorized persons is prevented by means of encrypted communication and password encryption.
- The Bluetooth® function can be deactivated after initial device setup.

ANDROID APP ON Google Play

Download on the App Store

A0033202

23 QR code for free Endress+Hauser SmartBlue App

Download and installation:

1. Scan the QR code or enter **SmartBlue** in the search field of the Apple App Store (iOS) or Google Play Store (Android).
2. Install and start the SmartBlue app.
3. For Android devices: enable location tracking (GPS) (not required for iOS devices).
4. Select a device that is ready to receive from the device list displayed.

Login:

1. Enter the user name: admin
2. Enter the initial password: serial number of the device

3. Change the password after logging in for the first time

Information on password and reset code

For devices that meet the requirements of IEC 62443-4-1 "Secure product developement lifecycle management" ("ProtectBlue"):
- If the user-defined password is lost: refer to the user management instructions and the reset button in the operating manual.
- Refer to the associated Security Manual (SD).

For all other devices (without "ProtectBlue"):
- If the user-defined password is lost, access can be restored via a reset code. The reset code is the serial number of the device in reverse. The original password is once again valid after the reset code has been entered.
- The reset code can also be changed in addition to the password.
- If the user-defined reset code is lost, the password can no longer be reset via the SmartBlue app. Contact Endress+Hauser Service in this case.

7.4 Access to the operating menu via the operating tool

For additional information, see Operating Instructions.

8 Commissioning

8.1 Preparations

WARNING

The settings of the current output are relevant for safety!

Incorrect settings may cause the product to overflow or a pump to run dry.
- ▶ The setting for the current output depends on the setting in the **Assign PV** parameter.
- ▶ After changing the setting of the current output: check the settings for the range (Lower range value output (LRV) and Upper range value output (URV)) and reconfigure them if necessary!

8.1.1 As-delivered state

If no customized settings were ordered:
- **Assign PV** parameter Level limit detection (8/16 mA mode)
- MAX safety mode
- Alarm condition set to min. 3.6 mA
- DIP switch for locking in OFF position
- Bluetooth switched on
- Density range > 0.7 g/cm³ (43.7 lb/ft³)
- Switching times 0.5 s when the fork is covered and 1.0 s when it is uncovered
- HART burst mode switched off

8.2 Configuring the operating language

8.2.1 Local display

Configuring the language of the local display

1. Press the E key for at least 2 s.
   ↳ A dialog box appears.
2. Unlock the display operation.
3. Select the **Language** parameter in the main menu.
4. Press the E key.
5. Select the desired language with the + key.
6. Press the E key.

Display operation locks automatically (except in the **Safety mode** wizard):
- after 1 min on the main page if no key has been pressed
- after 10 min within the operating menu if no key has been pressed

8.2.2 Operating tool

Set display language

Navigation: System → Display → Language

Selection in **Language** parameter; Visibility depends on order options or device settings

8.2.3 FieldCare

1. In the "Extras" menu, click "Options".
2. Set the preferred language for FieldCare in the "Language" section.

Setting the language for the local display via FieldCare

Navigation: System → Display → Language

▶ Set the desired language in the **Language** parameter.

8.2.4 DeviceCare

Click the menu icon:

A0046404

Click "Settings" and select the desired language:

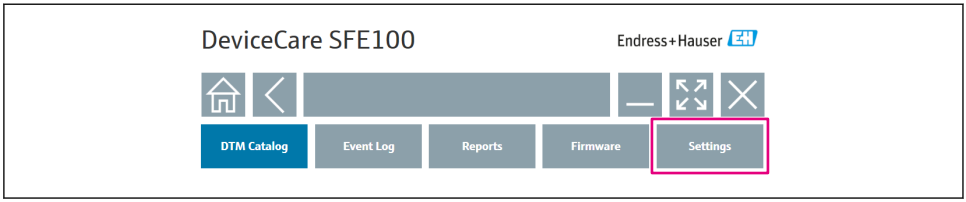

A0046406

Setting the language for the local display via DeviceCare

Navigation: System → Display → Language

- Set the desired language in the **Language** parameter.

8.3 Switching on the device

All configuration tools provide a commissioning assistant that supports the user when setting the most important configuration parameters (**Guidance** menu **Commissioning** wizard).

71783251

www.addresses.endress.com

Endress+Hauser

People for Process Automation