TI01884F/00/EN/04.26-00
71783274
2026-09-11

Technical Information
Liquiphant FTL63 Density with Density Calculator QML51

Vibronic

Density calculator for liquids specifically for the food and life sciences industries

Field of application

The density measuring line can be used in liquid media and in hazardous areas. It is used for the following purposes:
- Density measurement
- Intelligent medium detection
- Calculation of standard density and concentration
- To convert values to different units such as °Brix, °Baumé, °API etc.

Advantages

- Measurement used directly in tanks or pipes without the need for additional pipework
- Density Computer QML51 used for up to two measuring points
- Integration of existing temperature measurements for temperature compensation
- Integration of a pressure measuring instrument for pressure-compensated density measurement
- Hygienic sensor design (3-A, EHEDG) and conformity with materials standards, e.g., EG1935/2004, FDA, GB4806, cGMP

Endress+Hauser
People for Process Automation

Table of contents

About this document 3
Symbols 3

Function and system design 4
Density measurement and concentration calculation 4
Measuring principle 4
Measuring system 5
Specific density applications 6
Electronic insert for density measurement 7
Density Computer QML51 7
Application examples 7
Network connection 8
Communication and data processing 8

Inputs 9
Input of Liquiphant Density 9
Input of Density Computer QML51 10

Outputs 10
Output of Liquiphant Density 10
Output of Density Calculator QML51 11

Power supply 11
Energy supply of Liquiphant Density 11
Power supply of Density Calculator QML51 13

Performance characteristics 14
Reference operating conditions 14
Measurement accuracy 14

Installation 15
Liquiphant Density 15
Density Calculator QML51 19

Environment 19
Liquiphant Density 19
Density Computer QML51 21

Liquiphant Density process 22
Process temperature range 22
Thermal shock 22
Process pressure range 22
Pressure tightness 22
Solids contents 22

Mechanical construction 22
Mechanical construction of Liquiphant Density 22
Mechanical construction of Density Calculator QML51 32

Operability 34
Local display 34
Controls 34
Interfaces for data transmission 35

Certificates and approvals 36
CE mark 37
Ex approval 37
Other standards and guidelines 37
Additional information on Liquiphant Density 37

Ordering information 38
Service 38
Test reports, declarations and inspection certificates 38
Test, certificate, declaration 38
TAG 38

Accessories 39
Accessories 39
Accessories for Density Computer QML51 41

Documentation 41
Standard documentation 41
Supplementary device-dependent documentation 41

Registered trademarks 42

About this document

Symbols

Safety symbols

DANGER
This symbol alerts you to a dangerous situation. Failure to avoid this situation will result in serious or fatal injury.

WARNING
This symbol alerts you to a potentially dangerous situation. Failure to avoid this situation can result in serious or fatal injury.

CAUTION
This symbol alerts you to a potentially dangerous situation. Failure to avoid this situation can result in minor or medium injury.

NOTICE
This symbol alerts you to a potentially harmful situation. Failure to avoid this situation can result in damage to the product or something in its vicinity.

Symbols for certain types of information

Permitted
Procedures, processes or actions that are permitted

Preferred
Procedures, processes or actions that are preferred

Forbidden
Procedures, processes or actions that are forbidden

Tip
Indicates additional information

Reference to documentation

Reference to page

Reference to graphic

Symbols in graphics

1, 2, 3, ...
Item numbers

1., 2., 3.
Series of steps

Result of a step

Notice or individual step to be observed

A, B, C, ...
Views

Viewing angle
Indicates the object is shown from another view

Hazardous area
Indicates the hazardous area

Safe area (non-hazardous area)
Indicates the non-hazardous area

Electrical symbols

Symbol	Meaning
⎓	Direct current
∼	Alternating current

Symbol	Meaning
⎓	Direct current and alternating current
⏚	**Ground connection** A grounded terminal which, as far as the operator is concerned, is grounded via a grounding system.
⏚	**Protective earth (PE)** Ground terminals that must be connected to ground prior to establishing any other connections. The ground terminals are located on the interior and exterior of the device: ▪ Interior ground terminal: protective earth is connected to the mains supply. ▪ Exterior ground terminal: device is connected to the plant grounding system.

Tool symbols

Flat-blade screwdriver

Allen key

Open-ended wrench

Function and system design

Density measurement and concentration calculation

Determining the density and concentration, as well as media detection of liquids in tanks or pipes in all industries. Used, for example, for density and concentration measurements of acids, bases, solvents, pharmaceutical chemicals, sugar solutions, etc.

Measuring principle

The measuring system consists of the following main components:
- Liquiphant Density
- Density calculator

In conjunction with the density calculator, the Liquiphant Density measures the density of a Newtonian, purely viscous, liquid in pipes and tanks.

A piezoelectric drive causes the vibrating fork of the Liquiphant Density to vibrate at its resonance frequency. Changes in liquid density cause a change in the resonance frequency of the vibrating fork. As a result, the density of the medium has a direct impact on the resonance frequency of the vibrating fork. This effect is used for density measurement.

In the density calculator, the density of the liquid is calculated from the resonance frequency of the vibrating fork transmitted by the sensor and from stored sensor-specific parameters. To compensate for temperature and pressure influences, additional corresponding sensors can be connected to the density calculator.

Measuring system

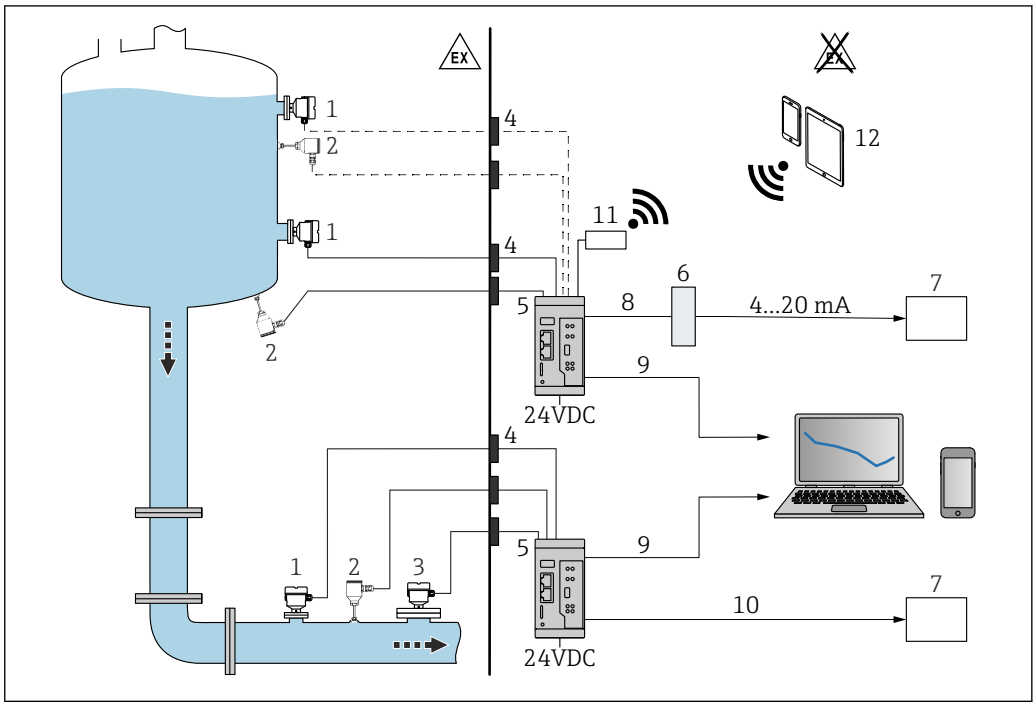

1 *Density measurement with Density Calculator QML51*

1 *Liquiphant Density with electronic insert FEL60D → pulse output*
2 *Temperature sensor, e.g.4 to 20 mAoutput*
3 *Pressure transmitter 4 to 20 mAoutput; required for pressures above 6 bar (87 psi) or for pressure fluctuations.*
4 *Ex barrier (Liquiphant Density, temperature and/or pressure measuring cell installed in the hazardous area)*
5 *Density Calculator QML51*
6 *Modbus TCP to 4 to 20 mA converter*
7 *Programmable logic controller (PLC)*
8 *Modbus TCP*
9 *Ethernet*
10 *Modbus TCP or OPC UA*
11 *TELTONIKA Router RUT241 (accessory). For a wireless connection.*
12 *Mobile devices*

For use in hazardous areas: Ex barrier via RN22 active barrier. The two-channel RN22 active barrier powers analog device circuits and safety equipment up to SIL 2 (SC 3). The intrinsically safe, HART® transparent interface provides a reliable connection between the field devices and Density Computer QML51. It is connected to 2-wire/4-wire devices in hazardous areas and provides a second galvanically isolated signal output in accordance with NAMUR NE 175.

In addition to calculating the density of a liquid medium, Density Calculator QML51 can also determine the reference density of the medium and the concentration of a solution, as well as detect up to four different media or an empty pipeline.

In doing so, the density calculator evaluates up to two measuring points and directly supplies connected two-wire transmitters with auxiliary power. This allows the connection of up to two Liquiphant Density sensors and two temperature sensors for compensation of temperature effects in order to calculate reference densities.

For concentration determination, stored standards such as ICUMSA for sugar concentrations, OIML ITS-90 for ethanol, and various preconfigured calculations for electrolyte solutions (according to the Laliberté-Cooper model) can be used.

Specific reference density or concentration tables can be entered manually in the form of linearization tables or imported into the density calculator in standard data formats (e.g., .csv, .xlsx) and used for calculations.

Density and concentration values can be output in various units, for example, SI units, °Baume, °Brix or °API.

Configuration of the QML51 is performed via an integrated web server, which can be accessed via a secure TLS connection using a standard web browser.

For output to a PLC or a SCADA system, the QML51 supports the Ethernet protocols Modbus TCP and OPC UA. If a current signal is required for connection to a PLC, this can be generated via a converter. A converter that generates up to 4 channels with an analog 4 to 20 mA signal from the Modbus TCP protocol is available as an accessory.

Specific density applications

The density computer's software calculates the density from the frequency, temperature and pressure input variables.

Operating principle

The oscillation frequency of the vibrating fork is reduced when the fork is completely covered with liquid. Since the density of the medium has a direct influence on the oscillation frequency, the density of the medium can be determined from the oscillation frequency based on this relationship. Using additional information, such as temperature and pressure, the current density of the medium can be compensated to a reference density or standard density. If the correlation between density and concentration is known, the concentration of the medium can be determined using a stored function. This value can be determined empirically or using existing tables or curves,for example. Standardized conversion tables from density to concentration are already stored in the density computer. Additional conversion tables can be provided by the customer and imported into the density computer.

Furthermore, up to four different media can be detected based on their density ranges. It is also possible to detect an empty pipe based on whether a certain density or frequency value is exceeded or not reached.

Reference density

In this application, the system uses a reference temperature such as 15.56 °C (59 °F) or 20 °C (68 °F). The variation of the medium's density at other temperatures must be known.

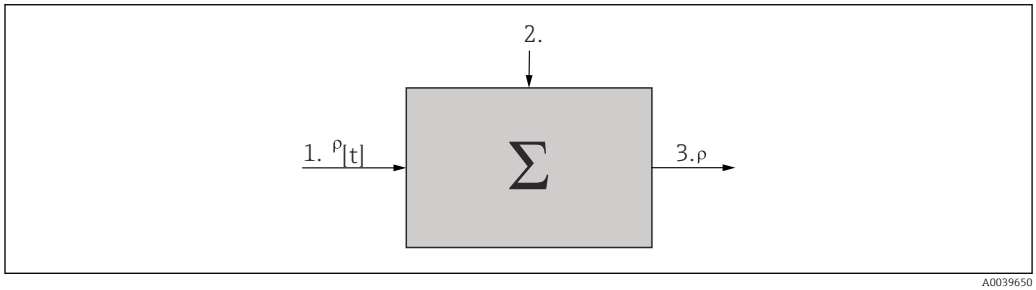

A0039650

1 *Input data: Table ρ [t]*
2 *Measured liquid medium: Temperature and density*
3 *Output: Calculated density ρ [standard]*

Concentration

Using density and concentration tables or curves already available or determined empirically, it is possible to determine the concentration when substances are continuously dissolved in a medium.

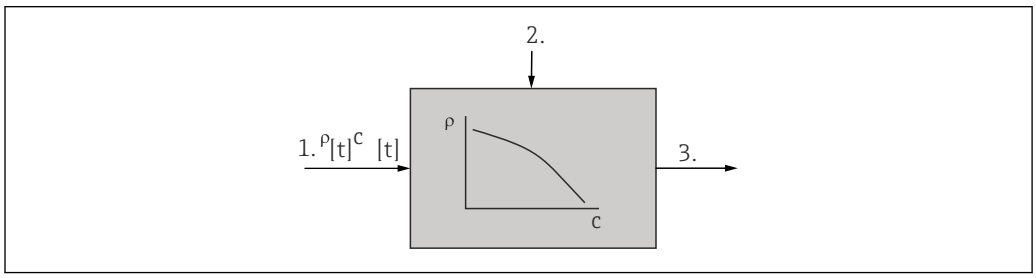

A0039651

1 *Input data: Table ρ, c [t]*
2 *Measured liquid medium: Temperature and density*
3 *Output: Calculated concentration*

Medium detection

To be able to distinguish between two to four media, the density function can be stored for several media, depending on the temperature. This allows the system to differentiate between two to four media.

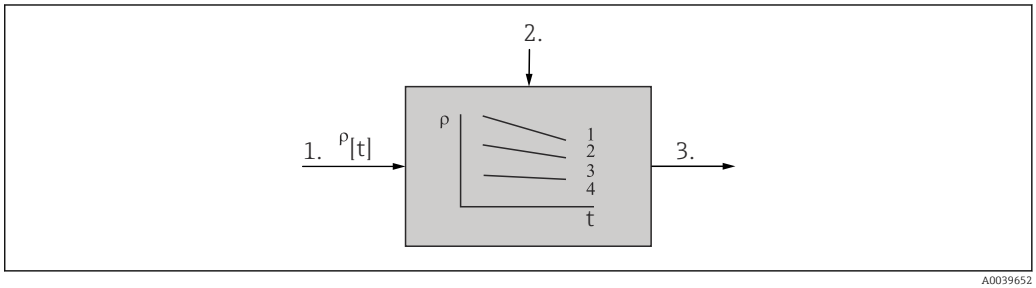

1 Input data: Tables ρ [t] for two liquid media
2 Measured liquid medium: Temperature and density
3 Output: Modbus TCP

Electronic insert for density measurement

Electronic insert FEL60D

The output signal of the Liquiphant with density electronics FEL60D is based on pulse technology. This signal continuously transmits the measured resonance frequency of the Liquiphant to Density Computer QML51

Density Computer QML51

Transmitter for calculating density and concentration values, and for medium detection.

Application examples

The measurement can be affected by:
- Air bubbles at the sensor
- Sensor not fully covered by medium
- Solid media buildup on the sensor
- High fluid velocity in pipes
- Severe turbulence in the pipe due to inlet and outlet runs that are too short
- Corrosion of the fork
- Non-Newtonian (not purely viscous) behavior of fluids

Applications: Density and concentration measurement

1 density measuring line, temperature-compensated

- 1x Liquiphant with electronic insert FEL60D
- 1x Density Computer QML51
- 1x 4 to 20 mA temperature transmitter

Available outputs: Modbus TCP, OPC UA, web browser

2 density measuring lines, temperature-compensated

- 2x Liquiphant with electronic insert FEL60D
- 1x Density Computer QML51
- 2x 4 to 20 mA temperature transmitter

Available outputs: Modbus TCP, OPC UA, web browser

1 density measuring line, pressure and temperature-compensated

- 1x Liquiphant with electronic insert FEL60D
- 1x Density Computer QML51
- 1x 4 to 20 mA temperature transmitter
- 1x pressure transmitter 4 to 20 mA

Available outputs: Modbus TCP, OPC UA, web browser

Applications: Medium detection

Detect 2-4 media

- 1x Liquiphant with electronic insert FEL60D
- 1x Density Computer QML51
- 1x 4 to 20 mA temperature transmitter
- **Available outputs:** Modbus TCP, OPC UA

Medium detection is performed on the basis of a configurable density and temperature range.

Network connection

The device can be connected into the computer network using 2 LAN ports that support the following connection speeds:
- 1 Gbit/s
- 100 Mbit/s
- 10 Mbit/s

The LAN ports support the "Auto MDI-X" feature. The ports automatically detect the type of connected cable (crossover or straight).

No special cables are required to connect the components.

Communication and data processing

- Measuring density of a liquid medium
- Liquiphant with electronic insert FEL60D and Density Calculator QML51
- Also for hazardous areas via intrinsically safe barrier accessories
- Up to 2 density measuring lines can be operated with Density Calculator QML51.

It is not possible to connect a device with a pulse output (PFM) and a device with a 4 to 20 mA HART or HART-only transmission to the same QML51 terminal block if the measured values are to be transmitted via HART communication.

It is not possible to connect two devices with a pulse output (PFM) to the same terminal block.

QML51 specifications	Version
Input terminals	2 x pulse **AND** 2 x 4 to 20 mA analog
	4 x 4 to 20 mA HART
Communication	Modbus TCP, OPC UA, web browser
Power supply mode	4 devices, max. current consumption per device: 24 mA

Interface connection data

OPC UA
The QML51 provides a preconfigured OPC UA server.

For additional information, see SD03498S.

Modbus TCP
Each of the two measuring points has a fixed register assignment, which is available via Device ID 1 for measuring point 1 and via Device 2 for measuring point 2 on the Modbus TCP server of the QML51. To connect the “Modbus TCP to 4-20 mA converter” accessory, Device 3 can be configured via the web browser according to the application.

For further information, see SD03501S.

LAN interface
The two LAN interfaces are compatible with IEEE 802.3. There are 2 shielded RJ45 sockets available for connection. The LAN interface can be used to connect the device to other devices with a hub or switch. The office equipment standard EN 60950 must be taken into consideration for safe distances between equipment. The arrangement corresponds to a standard MDI interface (AT&T258), which means that a shielded 1:1 cable with a maximum length of 100 m (328 ft) can be used. The device can operate with a bandwidth of 1 Gbit/s, 100 Mbit/s and 10 Mbit/s via the LAN interfaces. Direct connection to a PC is possible with a crossover cable. Half-duplex and full-duplex data transmission are supported.

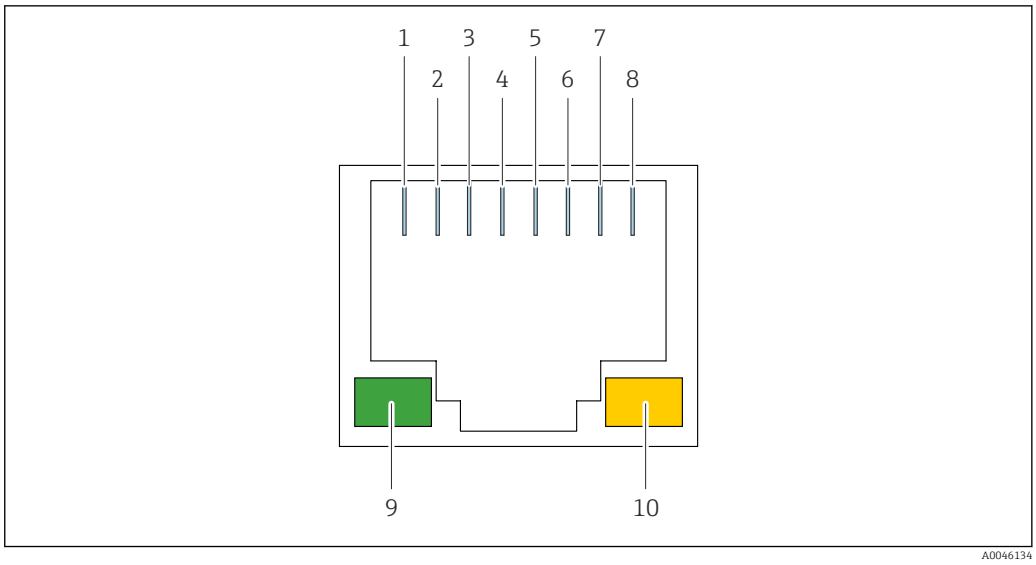

2 *Connection diagram for RJ45 socket*

1 *Tx+*
2 *Tx-*
3 *Rx+*
4 *Not connected*
5 *Not connected*
6 *Rx-*
7 *Not connected*
8 *Not connected*
9 *Green LED: link indicator*
10 *Yellow LED: active transfer indicator*

Dependability

Ease of maintenance

Firmware updates can be installed from the web server.

The configuration of the device or saved log files are not changed if the firmware is updated.

Ease of maintenance

Firmware updates can be installed in a variety of ways:
- Ethernet connection
- SD card
- USB stick

The configuration of the device or saved log files are not changed if the firmware is updated.

IT security

The manufacturer warranty is valid only if the product is installed and used as described in the Operating Instructions. The product is equipped with security mechanisms to protect it against any inadvertent changes to the settings.

IT security measures, which provide additional protection for the product and associated data transfer, must be implemented by the operators themselves in line with their security standards.

Inputs

Input of Liquiphant Density

Measured variable

Density of liquids

Measuring range

Density range: 0.3 to 2 g/cm³ (18.7 to 125 lb/ft³) (0.3 to 2 SGU)

Input of Density Computer QML51

Measured variable

- Current (Analog input, 4 to 20 mA)
- PFM
- HART

Only Liquiphant units with Endress+Hauser density electronics can be connected to the PFM input.

Not suitable for level and pressure measuring instruments.

Input signals

The following measured variables are implemented as an analog signal:
- Density
- Temperature
- Pressure

Measuring range

Current input
- 4 to 20 mA
- Max. input current: 24 mA per channel
- Measurement accuracy ± 0.04 mA
- Temperature drift: ± 2 µA / K
- Resolution: 12 bit

PFM/pulse input
- Frequency range: 10 to 160 Hz
- Measurement method: Period length or frequency measurement
- Temperature drift: 10 ppm at ambient temperatures of 15 to 45 °C

HART
- 4 to 20 mA + HART
- Fixed current: 4 mA (HART only)
- HART command 3: Up to four HART variables (PV, SV, TV, QV) are polled.

PFM/pulse input and HART cannot be operated on one terminal block simultaneously.

Galvanic isolation

The terminals are galvanically isolated.

With digital inputs, all terminal blocks are galvanically isolated from one another.

Outputs

Output of Liquiphant Density

Output and input variants

2-wire density (FEL60D) for density measurement
Connection to Density Calculator QML51

Ex connection data

See Safety instructions (XA):

All data relating to explosion protection are provided in separate Ex documentation and are available from the Downloads area:

Endress+Hauser website www.endress.com → Downloads

The Ex documentation is supplied as standard with all devices approved for use in explosion hazardous areas.

Intrinsically safe barrier
The following devices must be connected to the density calculator via an intrinsically safe barrier or an active barrier if they are used in a hazardous area:
- Liquiphant devices with hazardous area approval
- Temperature devices with hazardous area approval
- Pressure equipment with hazardous area approval

Output of Density Calculator QML51

Output signal

Ethernet-based protocols Modbus TCP, OPC UA and web browser.

For detailed information, see the Technical Information for Density Calculator QML51 (TI01866F)

Analog outputs can be implemented via a Modbus TCP to 4 to 20 mA signal converter. A suitable signal converter can be ordered as an accessory for the density calculator.

Power supply

Energy supply of Liquiphant Density

Liquiphant with FEL60D electronics is powered via the connection to the PFM terminals of the QML51. A separate power supply is not required.

NOTICE

Operation with other switching units is not permitted.
Destruction of electronic components.
- ▶ Do not install the FEL60D electronic insert in devices that were originally used as level switches.

Terminal assignment

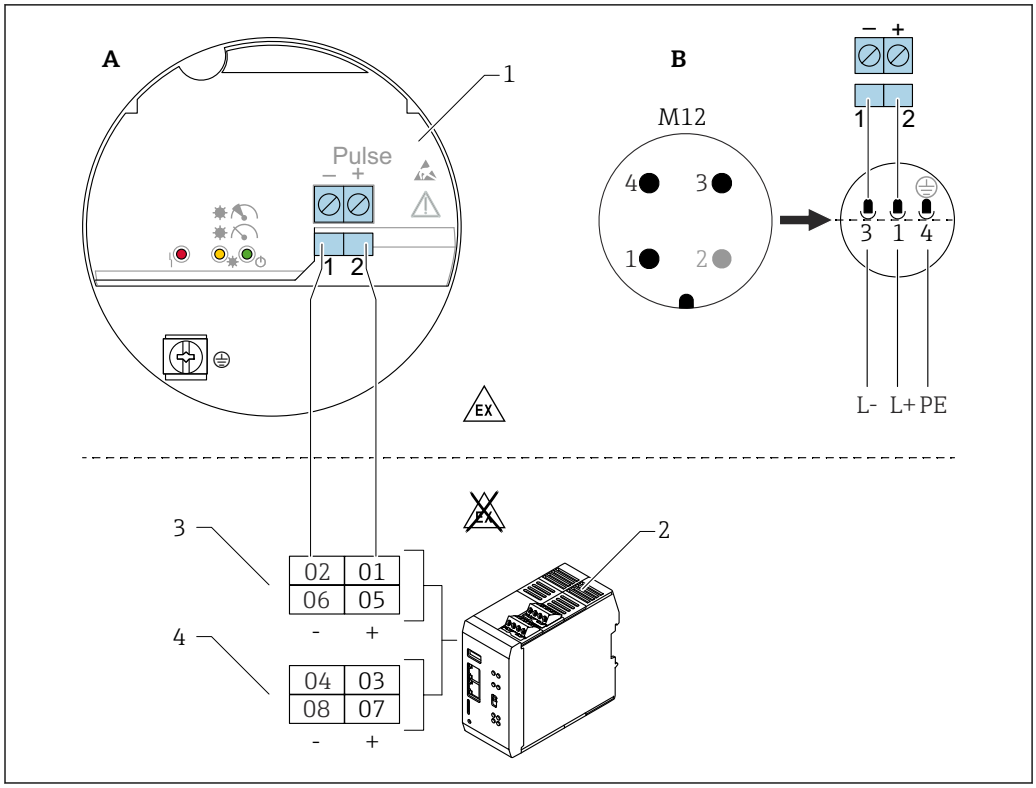

3 Connection diagram: connection of electronic insert FEL60D to the Density Calculator QML51

A Connection wiring with terminals
B Connection wiring with M12 plug in housing as per EN61131-2 standard
1 Electronic insert FEL60D
2 Density Calculator QML51
3 PFM channels (default setting)
4 4 to 20 mA(HART) channels (default setting), e.g. for temperature measuring devices

The channels are preset. The configuration can be changed.

It is not possible to connect a device with a pulse output (PFM) and a device with a 4 to 20 mA HART or HART-only transmission to the same terminal block if the measured values are to be transmitted via HART communication.

It is not possible to connect two devices with a pulse output (PFM) to the same terminal block.

The following devices can be connected to one terminal block:
- One device with a pulse output and one additional device with an analog output (4 to 20 mA).
- One device with a pulse output and one additional device with a 4 to 20 mA HART output, provided that HART communication is not used.
- Only one device with a pulse output. An additional device with a pulse output cannot be connected to the same terminal block.
- One or 2 devices with 4 to 20 mA or 4 to 20 mA HART In this case, HART communication can be used by both devices.

The previous Liquiphant Density version with FEL50D is compatible with Density Calculator QML51.

Supply voltage

U = DC 24 V ±20 %, only suitable for connecting to the Density Computer QML51

The device must be powered by a voltage supply categorized as "CLASS 2" or "SELV".

Power consumption

P < 9 W

Current consumption

Density: I < 10 mA

Overvoltage protection

Overvoltage category I

Pulse signal in case of alarm

Output signal in case of power failure and damaged sensor: 0 Hz.

Adjusting Liquiphant with density electronics FEL60D

There are 3 different types of adjustment:

- Standard adjustment (as delivered state):
  To determine the sensor characteristics, the fork parameters are measured under two conditions (vacuum and a defined water bath). The device-specific parameters determined are supplied with the device in an adjustment report. These parameters must be transferred to the Density Computer QML51.
- Special adjustment (select in the Product Configurator):
  To determine the sensor characteristics, the fork parameters are measured under three conditions (vacuum and two defined water baths at specified temperatures). The device-specific parameters determined are supplied with the device in an adjustment report. These parameters must be transferred to the Density Computer QML51.
  This type of adjustment achieves an even higher level of accuracy.
- Field adjustment:
  During field adjustment, the density determined by the user is transferred to the Density Computer QML51.

All the necessary parameters of the Liquiphant Density are documented in the **adjustment report** and in the **sensor pass**.

The documents are included in the scope of delivery.

Further information and the documentation currently available can be found on the Endress+Hauser website: www.endress.com → Downloads.

Power supply of Density Calculator QML51

Terminal assignment of density computer

Use flexible stranded conductors only with ferrules.

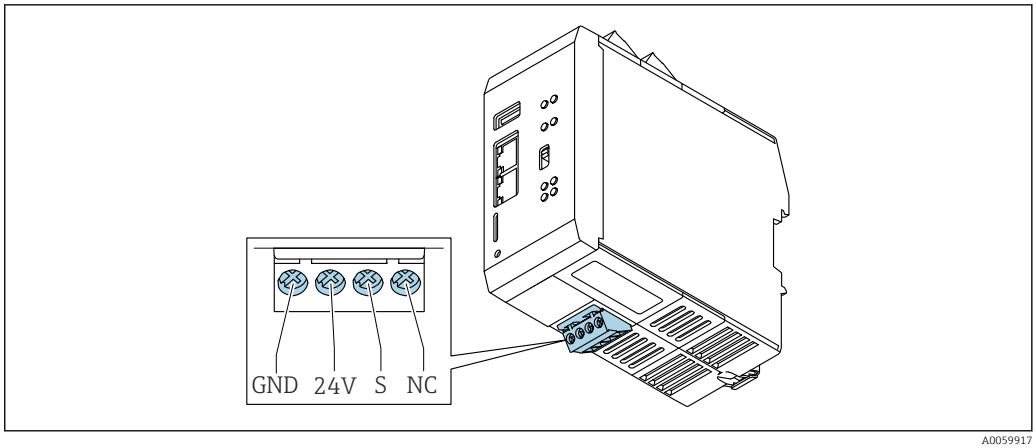

A0059917

GND : functional grounding and negative potential of the power supply
24V : positive potential of the power supply
S : shield
NC : Not connected

Supply voltage

24 V_{DC}

Power consumption

< 9 W

Connecting the power supply

NOTICE

Destruction of electronic components.

- Check whether the supply voltage matches the voltage indicated on the nameplate of the device.

DANGER

Impermissible supply voltage

There is a high risk of physical injury and damage to the electronic components.

-

Performance characteristics

Reference operating conditions

Normal operating conditions for special calibration and Liquiphant Density

- Medium: water H_2O
- Medium temperature: 0 to 80 °C (32 to 176 °F), motionless fluid
- Ambient temperature: 24 °C (75 °F) ±5 °C (±9 °F)
- Moisture: max. 90 %
- Warm-up time: >30 min

Measurement accuracy

The accuracy described here refers to the entire density measuring line.

General measuring conditions for accuracy data

- Measuring range: 0.3 to 2 g/cm³ (18.7 to 125 lb/ft³) (0.3 to 2 SGU)
- Observe the distance between the vibrating fork and the surface of the medium (> 50 mm (1.97 in)) see the "Orientation" section
- Measurement error, temperature sensor: < 1 K
- Maximum viscosity: 350 mPa·s (3.5 P)
- Maximum flow velocity: 2 m/s (6.56 ft/s)
  - Laminar flow rate, bubble-free
  - For higher flow velocities, structural measures such as a bypass or an increase in pipe diameter must be taken to reduce the flow velocity
- Process temperature: 0 to 80 °C (32 to 176 °F) - validity of accuracy data
- Power supply in accordance with specification QML51
- Data as per DIN EN 61298-2
- Process pressure: −1 to 25 bar (−14.5 to 362.5 psi)

Measured error

1 g/cm³ (62.4 lb/ft³) = 1 SGU (Specific Gravity Unit)

- Standard adjustment: ±0.02 g/cm³ (±1.2 lb/ft³) (±1.2 % of the span 1.7 g/cm³ (106.1 lb/ft³), under general measuring conditions)
- Special adjustment: ±0.005 g/cm³ (±0.3 lb/ft³) (±0.3 % of span 1.7 g/cm³ (106.1 lb/ft³), under normal operating conditions)
- Field adjustment: ±0.002 g/cm³ (±0.1 lb/ft³), at operating point

Non-repeatability - reproducibility

1 g/cm³ (62.4 lb/ft³) = 1 SGU (Specific Gravity Unit)

- Standard adjustment: ±0.002 g/cm³ (±0.1 lb/ft³) (under general measuring conditions)
- Special adjustment: ±0.0007 g/cm³ (±0.04 lb/ft³) (under normal operating conditions)
- Field adjustment: ±0.002 g/cm³ (±0.1 lb/ft³), at operating point

Factors influencing accuracy data

- All information relating to measurement accuracy when determining the viscosity of liquids is based on Newtonian fluids
  - It is not possible to perform density measurement in the following liquids: gel, viscoelastic gel, non-Newtonian elastic, pseudoelastic and plastic-viscous liquids.

- Long-term drift typically: ±0.00002 g/cm³ (±0.0012 lb/ft³) per day
- Temperature coefficient typically: ±0.0002 g/cm³ (±0.002 lb/ft³) per 10 K
- Flow velocity in pipes: > 2 m/s (6.56 ft/s)
- Buildup on fork
- Air bubbles in the case of vacuum applications or improper installation
- Incomplete coverage of the fork
- In the event of changes in pressure >5 bar (72 psi), a pressure measurement is necessary for compensation
- In the event of changes in temperature >1 K, a temperature measurement is necessary for compensation
- Mechanical stress, such as deformation of the vibrating fork, can impair measurement accuracy and must be avoided
- Devices exposed to mechanical stress must be replaced

Cyclic field calibration can take place depending on the measurement accuracy required.

Installation

Liquiphant Density

The following information is supplemented by additional documentation for the Liquiphant (Endress+Hauser website www.endress.com → Downloads)

Orientation

The mounting location must be selected such that the vibrating fork and the membrane are always immersed in the medium.

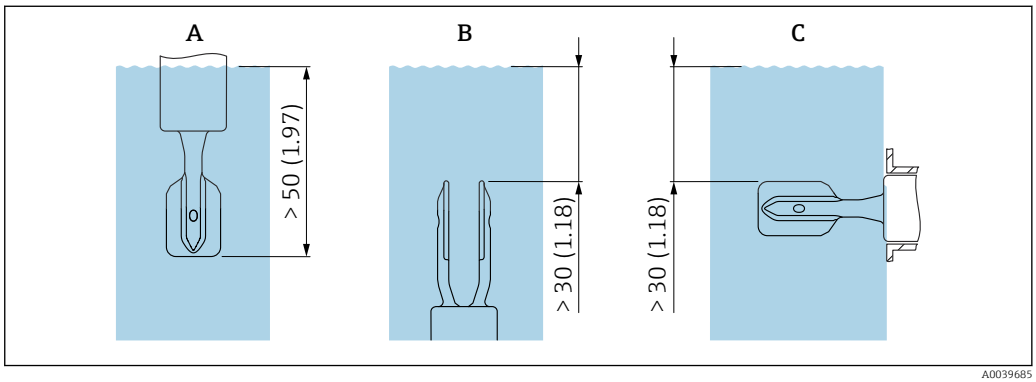

4 *Unit mm (in)*

A Installation from above
B Installation from below
C Installation from the side

- Avoid air bubbles in pipe or nozzle
- Ensure suitable ventilation

Maximum viscosity: 350 mPa·s (3.5 P)

Input of correction factor "r"

The measurement result is affected if the distance between the tuning fork and the wall of the tank or pipe is very short:
- The medium has to flow around the tuning fork.
- The tuning fork of Liquiphant requires space to vibrate.

The measured error can be compensated for by entering a correction factor "r".

Pipe nominal diameters with internal measurements <44 mm (1.73 in) are not permitted!

For detailed information, please refer to the relevant Operating Instructions.

Inlet and outlet runs

Inlet run

If possible, install the sensor as far upstream as possible, e.g. valves, T-pieces, elbows, flange elbows, etc.

To comply with the accuracy specification, the inlet run must meet the following requirements:

Inlet run: ≥ 5x DN (nominal diameter) - min. 750 mm (29.5 in)

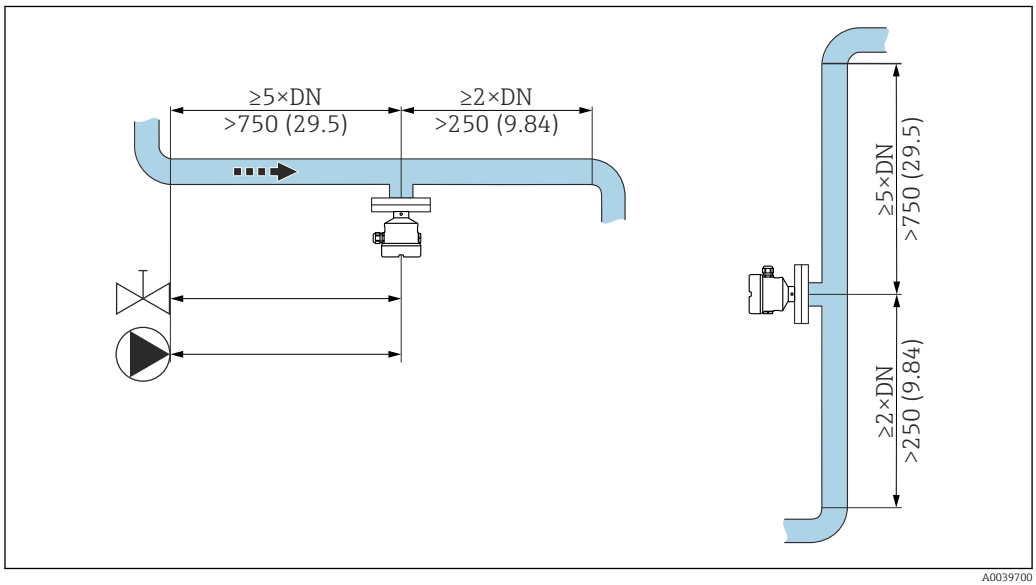

5 Installing the inlet run. Unit of measurement mm (in)

Outlet run

To comply with the accuracy specification, the outlet run must meet the following requirements:

Outlet run: ≥ 2x DN (nominal diameter) - min. 250 mm (9.84 in)

The pressure and temperature sensor must be installed on the outlet side of the flow direction after the Liquiphant density sensor. When installing pressure and temperature measuring points downstream of the device, make sure the distance between the measuring point and the device is sufficient.

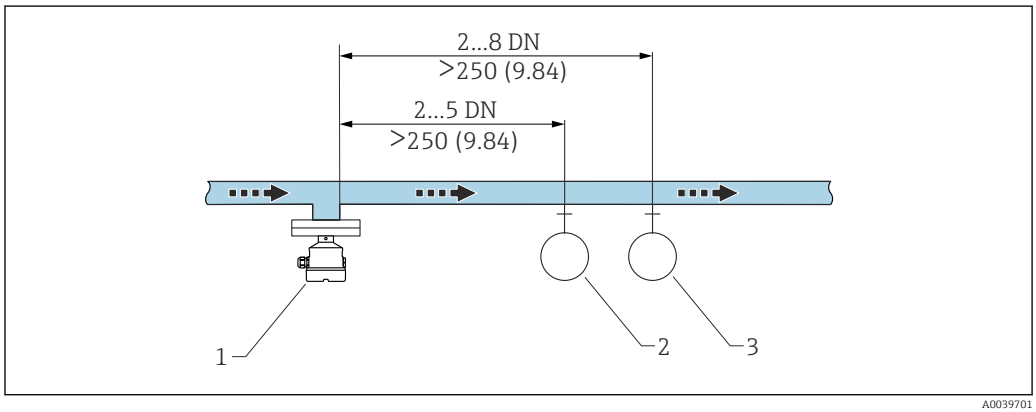

6 Installing the outlet run. Unit of measurement mm (in)

1 Liquiphant density sensor
2 Pressure measuring point
3 Temperature measuring point

Installing the device in piping

NOTICE

Incorrect alignment of the tuning fork

Vortices and eddies can falsify the measuring result.

▶ Align the tuning fork in the flow direction for internal fixtures in pipes or tanks with an agitator.

- The flow velocity of the medium must not exceed 2 m/s (6.56 ft/s) during operation
- Flow velocity > 2 m/s: Separate the tuning fork from the direct flow of media by using structural features such as a bypass or pipe expansion to reduce the flow velocity to max. 2 m/s (6.56 ft/s)
- The flow will not be significantly impeded if the tuning fork is correctly aligned and the marking is pointing in the direction of flow.
- A marking on the process connection indicates the position of the tuning fork.
  Threaded connection = dot on the hexagon head; flange = two lines on the flange.
  The marking is visible when installed.

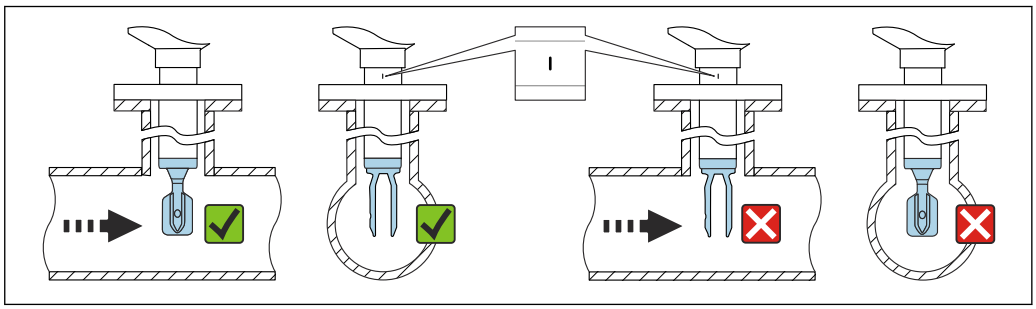

A0042208

7 *Installation in pipes (take fork position and marking into consideration)*

Aligning the cable entry

All housings can be aligned. Forming a drip loop on the cable prevents moisture from entering the housing.

Housing without set screw

The device housing can be rotated up to 350°.

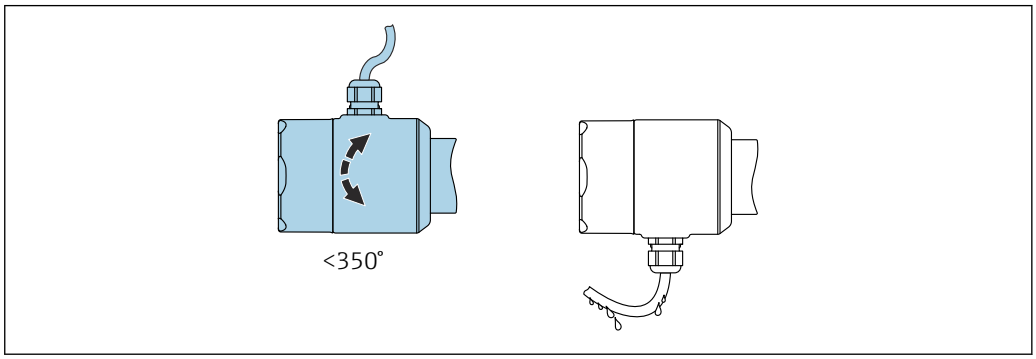

A0052359

8 *Housing without set screw; form a drip loop on the cable.*

Housing with locking screw

NOTICE

The locking screw is not sufficiently tightened when the device is delivered.

The housing may rotate and become loose due to vibration.

▶ Tighten the locking screw to 3.5 Nm (2.58 lbf ft).

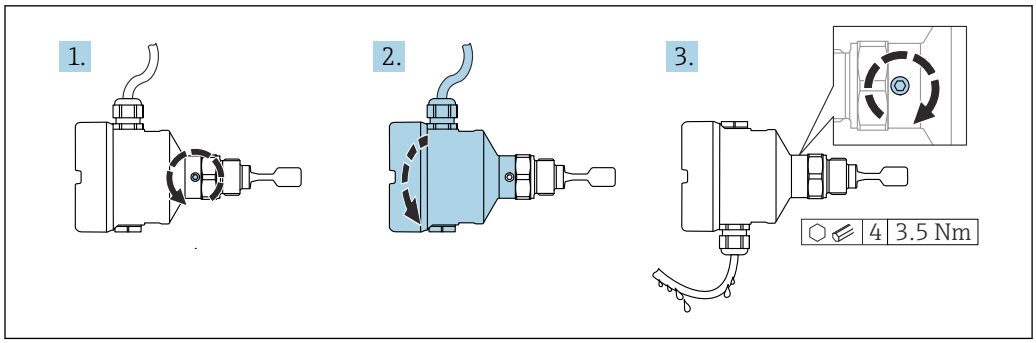

A0037347

9 Housing with external locking screw; form a drip loop on the cable

Special installation instructions

Vessel with heat insulation

If process temperatures are high, the device should be included in the vessel insulation system to prevent the electronics from heating as a result of thermal radiation or convection. The insulation in this case should not be higher than the neck of the device.

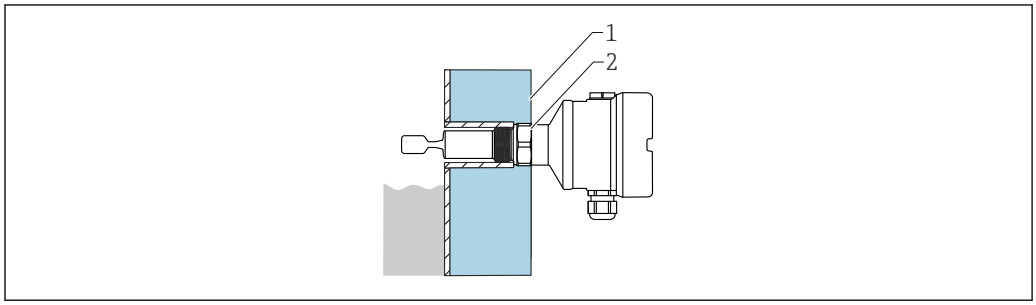

A0051616

10 Example of a vessel with heat insulation

1 Vessel insulation
2 Insulation (up to the housing neck max.)

Support the device

Support the device in the event of severe dynamic load. Maximum lateral loading capacity of the pipe extensions and sensors: 75 Nm (55 lbf ft).

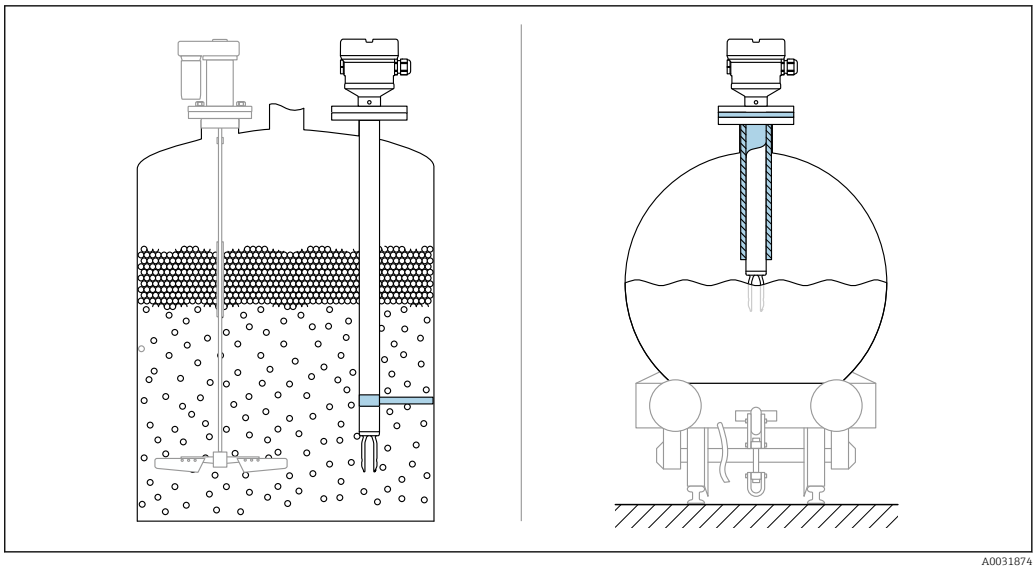

11 *Examples of support in the event of dynamic load*

Marine approval: In the case of pipe extensions or sensors longer than 1 600 mm (63 in), a support is needed at least every 1 600 mm (63 in).

Weld-in adapter with leakage hole

Position the weld-in adapter so that the leakage hole points downwards. This allows any leakage to be detected at an early stage, as the escaping medium becomes visible.

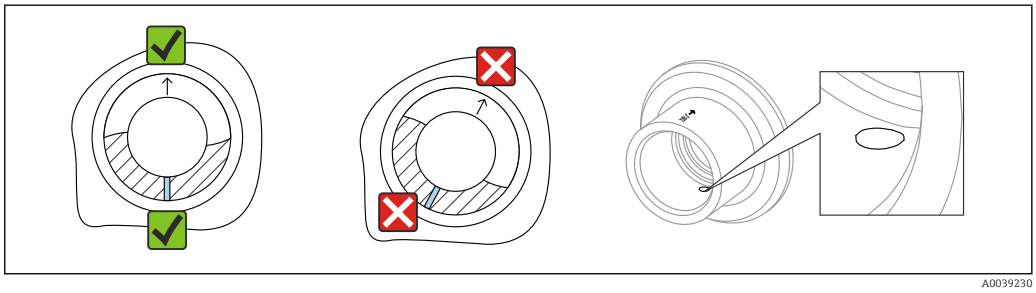

12 *Weld-in adapter with leakage hole*

Sliding sleeves

For more details, see the "Accessories" section.

Special Documentation SD02398F (Installation Instructions)

Density Calculator QML51

Mounting location

Mount the device in a cabinet on a DIN rail as per IEC 60715.

Orientation

No restrictions.

Environment

Liquiphant Density

Ambient temperature range

−40 to 70 °C (−40 to 158 °F)

The minimum permitted ambient temperature of the plastic housing is limited to −20 °C (−4 °F); 'indoor use' applies to North America.

Outdoor operation in strong sunlight:
- Mount the device in a shaded location
- Avoid direct sunlight, particularly in warmer climatic regions
- Use a weather protection cover, which can be ordered as an accessory

Further information on using the device in hazardous areas and on documentation that is currently available can be found on the Endress+Hauser website: www.endress.com → Downloads.

Hazardous area
In the hazardous area, the permitted ambient temperature can be limited depending on the zones and gas groups. Pay attention to the information in the Ex documentation (XA).

Humidity

Operation up to 100 %. Do not open in a condensing atmosphere.

Storage temperature

−40 to 80 °C (−40 to 176 °F)

Operating altitude

As per IEC 61010-1 Ed.3:
- Up to 2 000 m (6 600 ft) above sea level
- Can be extended to 3 000 m (9 800 ft) above sea level if overvoltage protection is used

Climate class

As per IEC 60068-2-38 test Z/AD

Degree of protection

Testing according to IEC 60529 and NEMA 250

IP68 test condition: 1.83 m H_2O for 24 h

Housing
See cable entries

Cable entries
- M20 coupling, plastic, IP66/68 NEMA Type 4X/6P
- M20 coupling, nickel-plated brass, IP66/68 NEMA Type 4X/6P
- M20 coupling, 316L, IP66/68 NEMA Type 4X/6P
- M20 coupling, 316L, hygienic, IP66/68/69 NEMA Type 4X/6P
- M20 thread, IP66/68 NEMA Type 4X/6P
- G ½ thread, NPT ½, NPT ¾ IP66/68 NEMA Type 4X/6P

Degree of protection for M12 plug
- When housing is closed and connection cable is plugged in: IP66/67 NEMA Type 4X
- When housing is open or connection cable is not plugged in: IP20, NEMA Type 1

NOTICE

M12 plug: Loss of IP protection class due to incorrect installation!
- ▶ The degree of protection only applies if the connecting cable used is plugged in and screwed tight.
- ▶ The degree of protection only applies if the connecting cable used is specified according to IP67 NEMA Type 4X.

If the "M12 plug" option is selected as the electrical connection, **IP66/67 NEMA Type 4X** applies for all housing types.

Vibration resistance

As per IEC 60068-2-64-2008
a(RMS) = 50 m/s^2, f = 5 to 2 000 Hz, t = 3 axes x 2 h

For increased oscillations or vibrations, the following additional option is recommended: feature "Application", version "B" 100 bar (1 450 psi) process pressure.

Shock resistance

As per IEC 60068-2-27-2008: 300 m/s² [= 30 g_n] + 18 ms

g_n: standard acceleration of gravity

Mechanical load

Support the device in the event of severe dynamic load. Maximum lateral loading capacity of the pipe extensions and sensors: 75 Nm (55 lbf ft).

For more details, see the "Supporting the device" section.

Pollution degree

Pollution degree 2

Electromagnetic compatibility (EMC)

Electromagnetic compatibility as per the EN 61326 series and NAMUR Recommendation EMC (NE 21)
Interference immunity according to Table 2 (Industrial), interference radiation according to Group 1 Class B

For more details, refer to the EU Declaration of Conformity.

Density Computer QML51

Ambient temperature range

−20 to 60 °C (−4 to 140 °F)

Transport and storage temperature

−25 to 85 °C (−13 to 185 °F)

Humidity

EN 60068-2-30; Db; 0.5 K/min: 5 to 85 %; non-condensing

Condensation

Not permitted

Operating height

Up to 2 000 m (6 562 ft) above sea level

Climate class

IEC 60654-1, Class B2

Ambient class

Pollution degree: 2

Degree of protection

IP20 (as per IEC/EN 60529, NEMA 1)

IK06 (as per IEC/EN 61010-1)

Vibration resistance

EN 60068-2-64 / IEC60068-2-64: 20 to 2 000 Hz, 0.01 g^2/Hz

Shock resistance

IEC60068-2-27:2008, ±15 g; 11 ms

Impact resistance

1 J

Electromagnetic compatibility (EMC)

- Interference immunity: as per IEC 61326, industrial environment
- Interference emissions: as per IEC 61326, Class B

Information on connecting shielded cables is provided in Technical Information TI00241F, "EMC test procedures".

Liquiphant Density process

Process temperature range	0 to 80 °C (32 to 176 °F)
Thermal shock	≤ 120 K/s
Process pressure range	−1 to 25 bar (−14.5 to 362.5 psi) **WARNING** **Incorrect design or use of the device may lead to bursting parts!** This may result in severe, possibly irreversible injury to persons and environmental hazards. ▶ Only operate the device within the specified limits for the components! ▶ MWP (maximum working pressure): The maximum working pressure is specified on the nameplate. This value refers to a reference temperature of 20 °C (68 °F) and may be present at the device for an unlimited time. Note temperature dependency of MWP. For higher temperatures, refer to the following standards for the permitted pressure values for flanges:EN 1092-1 (materials 1.4435 and 1.4404 are identical with regard to their stability/ temperature property and are grouped together in under 13E0 in EN 1092-1 Tab. 18. The chemical composition of the two materials can be identical), ASME B 16.5a, JIS B 2220 (the latest version of the standard applies in each case). ▶ The Pressure Equipment Directive (2014/68/EU) uses the abbreviation "PS". The abbreviation "PS" corresponds to the maximum working pressure (MWP) of the device ▶ MWP data that deviate from this is provided in the relevant sections of the Technical Information.
Pressure tightness	Up to vacuum
Solids contents	Ø ≤ 5 mm (0.2 in)

Mechanical construction

Mechanical construction of Liquiphant Density	**Design, dimensions** *Device height* The device height consists of the following components: ▪ Housing including cover ▪ Temperature spacer and/or pressure-tight feedthrough (second line of defense), optional ▪ Compact version, pipe extension or short pipe version ▪ Process connection ▪ Probe design: compact version, pipe extension or short pipe version The individual heights of the components can be found in the following sections: ▪ Determine the height of the device and add the individual heights ▪ Take the installation clearance into consideration (space that is needed to install the device)

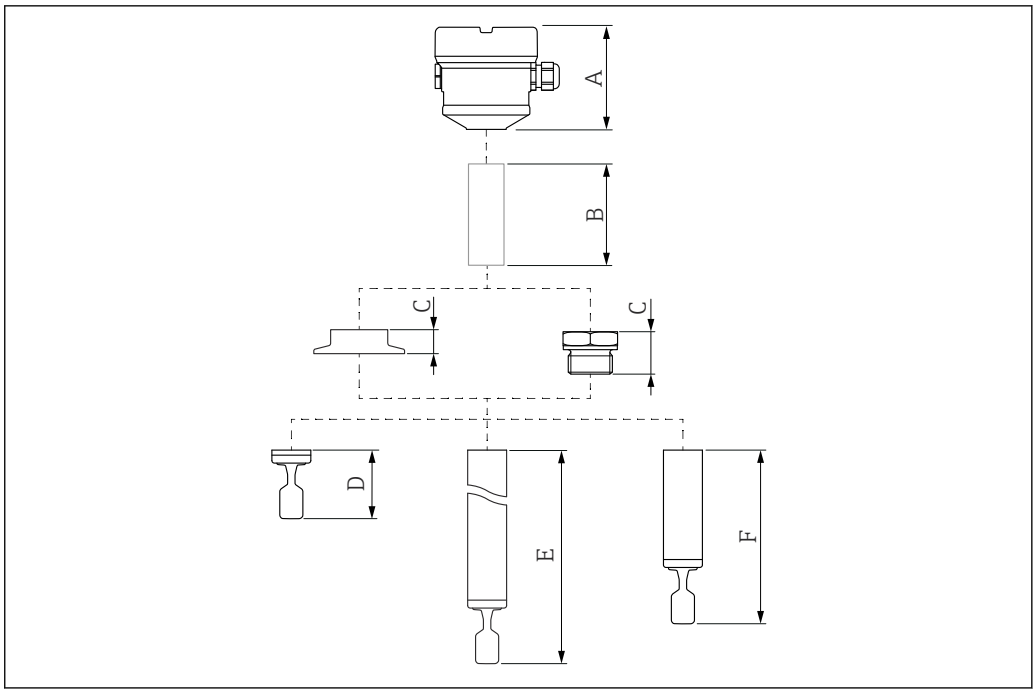

A0052410

13 Components for determining the height of the device

A Housing with electronic insert FEL60D and cover
B Temperature spacer, pressure-tight feedthrough (optional)
C Process connection
D Probe design: compact version with vibrating fork
E Probe design: pipe extension with vibrating fork
F Probe design: short pipe version with vibrating fork

Dimensions

Housing and cover

All housings can be aligned. The housing alignment can be fixed on housings with a locking screw.

Single compartment housing, plastic

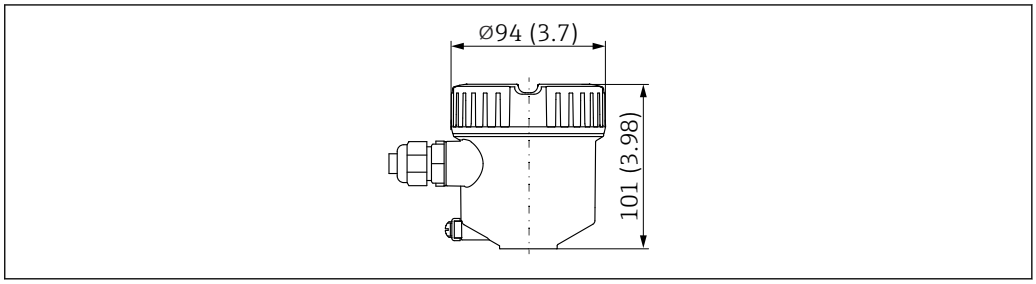

A0051909

14 Dimensions of single compartment housing, plastic; cover without sight glass. Unit of measurement mm (in)

Single compartment housing, aluminium, coated

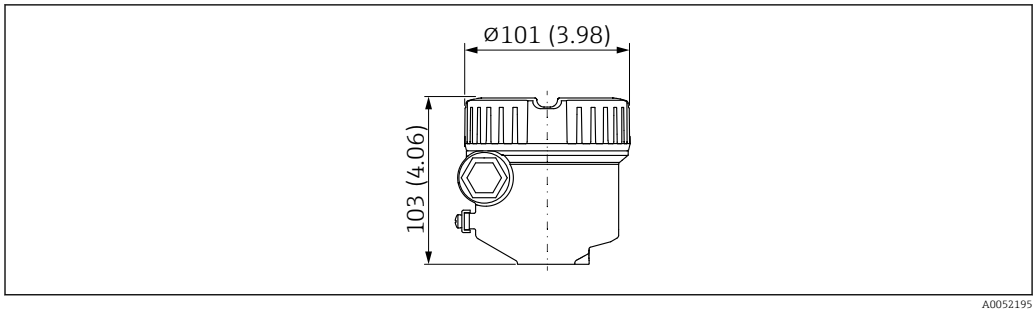

15 Dimensions of single compartment housing, aluminium; cover without sight glass. Unit of measurement mm (in)

Single compartment housing, aluminum, coated (Ex d/XP, dust ignition-proof)

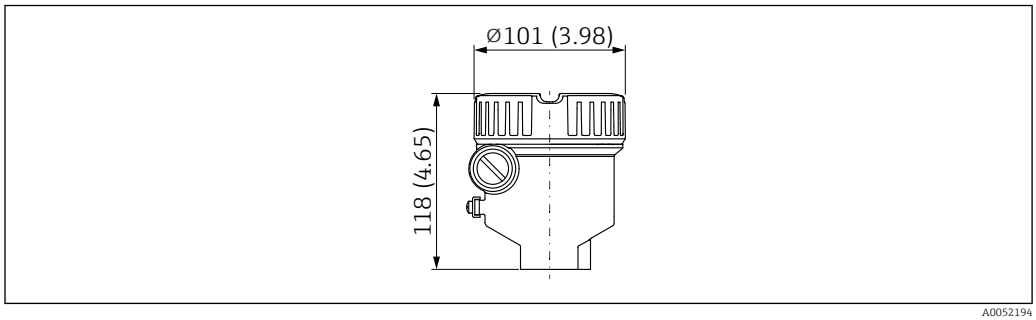

16 Dimensions of single compartment housing, aluminum, coated; suitable for Ex d/XP, dust ignition-proof; cover without sight glass. Unit of measurement mm (in)

Single compartment housing, 316L, hygienic

For use in hazardous areas with a certain type of protection, the ground terminal on the outside of the housing is required.

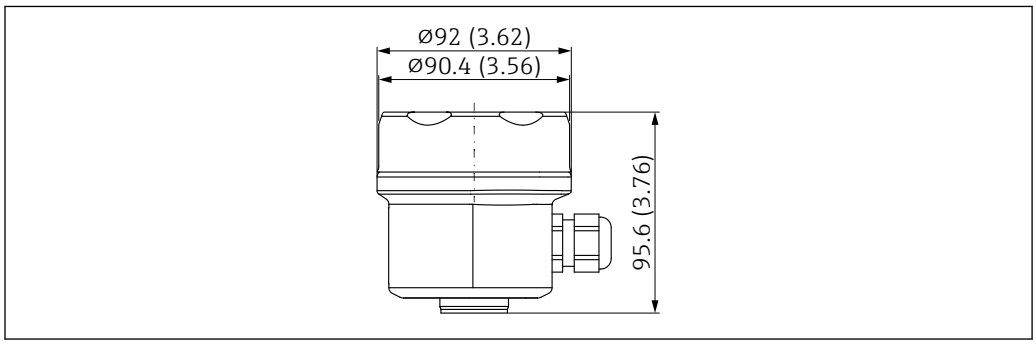

17 Dimensions of single compartment housing, 316L, hygienic; cover without sight glass. Unit of measurement mm (in)

Dual compartment housing, L-shaped, aluminum, coated

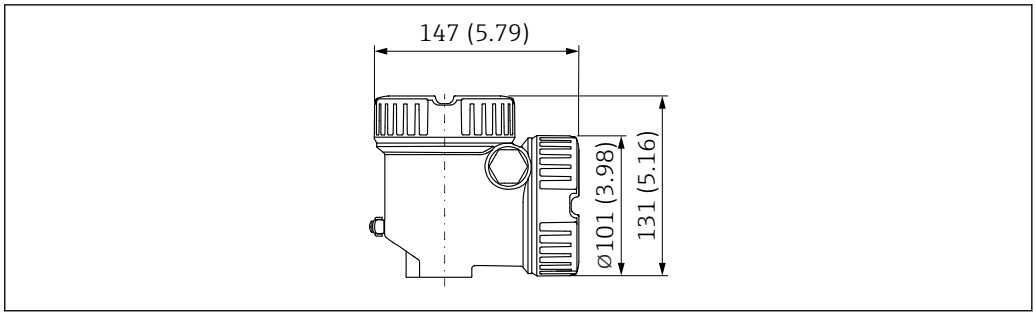

18 *Dimensions of dual compartment housing, L-shaped, aluminum, coated; also with Ex d/XP, dust ignition-proof; cover without sight glass. Unit of measurement mm (in)*

Ground terminal

- Ground terminal inside the housing, max. conductor cross-section 2.5 mm^2 (14 AWG)
- Ground terminal outside on the housing, max. conductor cross-section 4 mm^2 (12 AWG)

Cable glands

Cable diameter:
- Plastic: Ø5 to 10 mm (0.2 to 0.38 in)
- Nickel-plated brass: Ø7 to 10.5 mm (0.28 to 0.41 in)
- Stainless steel: Ø7 to 12 mm (0.28 to 0.47 in)
- Stainless steel, hygienic: Ø7 to 10 mm (0.28 to 0.39 in)

The scope of delivery comprises:
- 1 cable gland installed
- 1 cable gland sealed with dummy plug

Exceptions: For Ex d/XP, only threaded insertions are permitted.

Temperature spacer, pressure-tight feedthrough (optional)

Provides sealed insulation for the vessel and a normal ambient temperature for the housing.

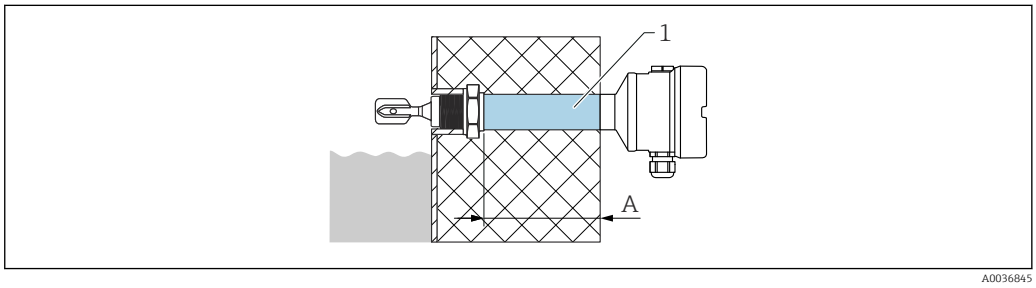

1 *Temperature spacer and/or pressure-tight feedthrough with maximum insulation length*
A *Approx. 140 mm (5.51 in)*

Dimension A depends on the process connection selected and can therefore vary. For exact dimensions, information is available from the Endress+Hauser sales office.

Product Configurator, feature "Sensor design":
- Temperature spacer
- Pressure-tight feedthrough (second line of defense)
  If the sensor is damaged, this protects the housing from vessel pressures up to 100 bar (1 450 psi).

The "Pressure-tight feedthrough" version can only be selected in conjunction with the "Temperature spacer" option.

Probe design

Compact version
Sensor length L: depends on process connection
For more details, see the "Process connections" section.

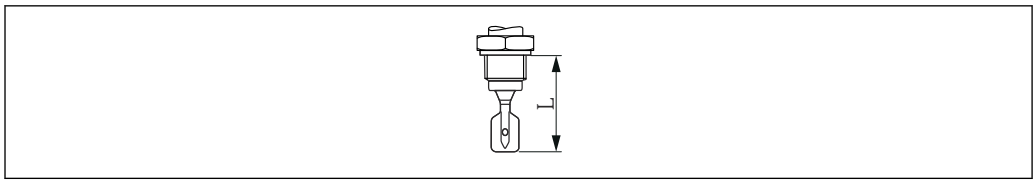

19 Probe design: Compact version, sensor length L

Short pipe version

Sensor length L: Depends on process connection

- Thread G 1 approx. 118 mm (4.65 in)
- Ingold, flush-mounted tank connection, DIN 11851/DIN 11864-1/SMS 1145 pipe connection, DRD, Varivent, clamp/Tri-Clamp approx. 115 mm (4.53 in)
- Flush-mounted 1" (G 1 welding boss from Endress+Hauser) approx. 104 mm (4.09 in)

Pipe extension

- Sensor lengths L: 148 to 3 000 mm (5.83 to 118.11 in)
- Length tolerances L: < 1 m (3.3 ft) = −5 mm (−0.2 in), 1 to 3 m (3.3 to 9.8 ft) = −10 mm (−0.39 in)

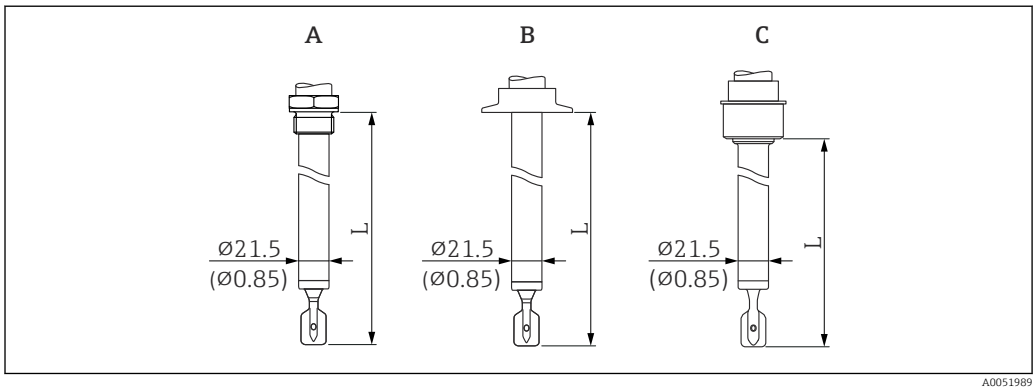

20 Probe designs: Pipe extension, short pipe version (sensor length L). Unit of measurement mm (in)

A Thread G 1
B For example, clamp/Tri-Clamp, Varivent
C Flush-mounted tank connection for installation in weld-in adapter

Tuning fork

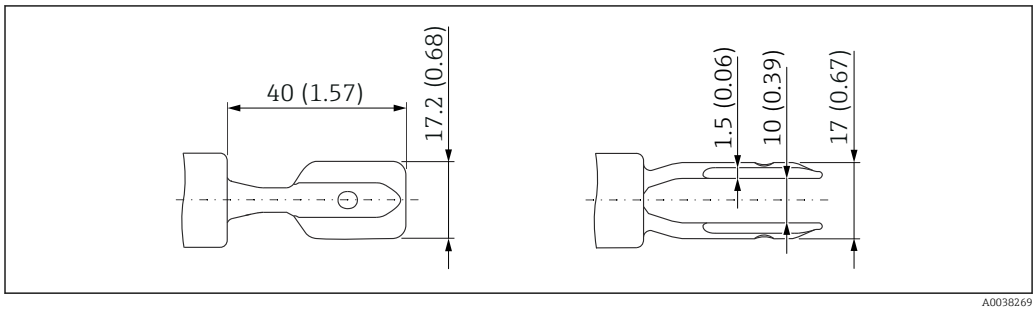

21 Tuning fork. Unit of measurement mm (in)

Process connections

Observe the permitted process temperature of 0 to 80 °C (32 to 176 °F). Higher temperatures affect the measurement accuracy.

Process connection, sealing surface

- Thread ISO228, G
- Ingold
- Flush-mounted tank connection

- DIN11851 pipe union
- DIN11864-1 pipe union
- DRD
- SMS1145 pipe union
- Varivent (Varinline)
- Clamp/Tri-Clamp

Height of process connection

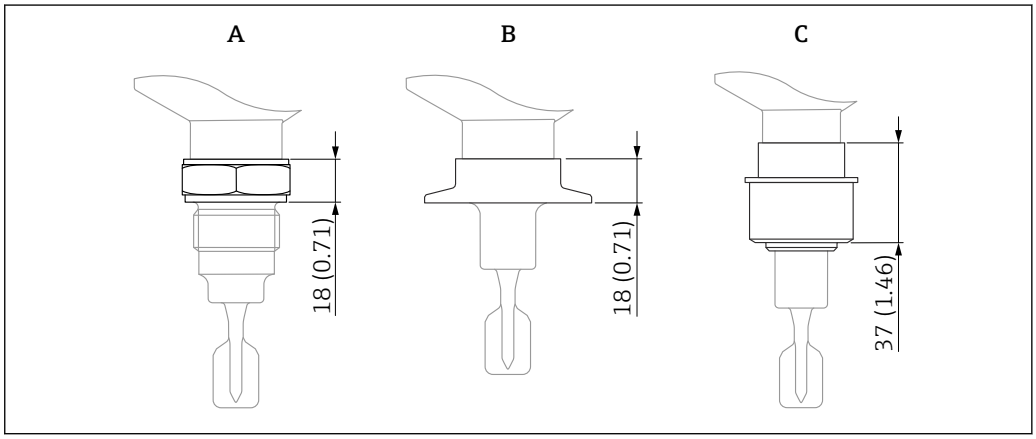

22 Maximum height specification for the process connections. Unit of measurement mm (in)

A Process connection with threaded connection
B For example: Clamp/Tri-Clamp, Varivent
C Flush-mounted tank connection for installation in welding neck

Thread ISO228 G ¾ for installation in weld-in adapter

G ¾ with defined thread start for flush mounting in weld-in adapter
- Only for sensor design: compact version
- Pressure rating, temperature: ≤ 40 bar (580 psi), ≤ +100 °C (+212 °F)
- Pressure rating, temperature: ≤ 25 bar (363 psi), ≤ +150 °C (+302 °F)
- Weight: 0.2 kg (0.44 lb)
- Accessories: weld-in adapter, optionally available as "Accessory enclosed"

A seal is not included in the delivery. The maximum temperature and maximum pressure depend on the clamping ring and sealing element used (according to the process connection design). The lowest value applies in each case.

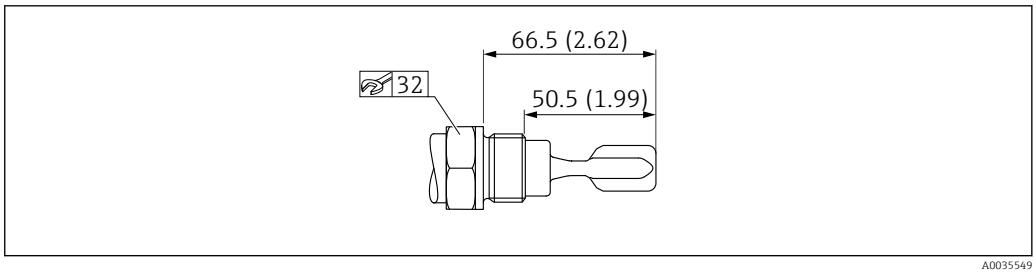

23 Thread ISO228 G ¾. Unit of measurement mm (in)

Thread ISO228 G 1 for installation in weld-in adapter

G 1 with defined thread start, comprising sealing surface for flush mounting in weld-in adapter
- Pressure rating, temperature: ≤ 40 bar (580 psi), ≤ +100 °C (+212 °F)
- Pressure rating, temperature: ≤ 25 bar (363 psi), ≤ +150 °C (+302 °F)
- Weight: 0.33 kg (0.73 lb)
- Accessories: weld-in adapter, optionally available as "Accessory enclosed"

A seal is not included in the delivery. The maximum temperature and maximum pressure depend on the clamping ring and sealing element used (according to the process connection design). The lowest value applies in each case.

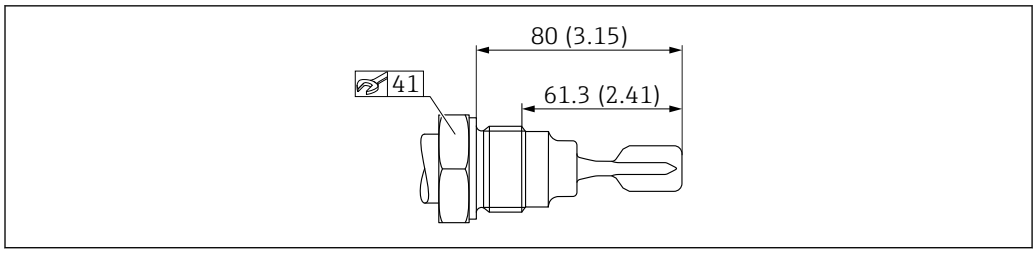

24 Thread ISO228 G 1. Unit of measurement mm (in)

Ingold fitting

Ingold fitting 25 x 46 mm (2.52 in)
- Pressure rating: ≤ 16 bar (232 psi)
- Temperature: ≤ 150 °C (302 °F)
- Weight: 0.2 kg (0.44 lb)
- Scope of delivery: cap-nut G 1¼, seal

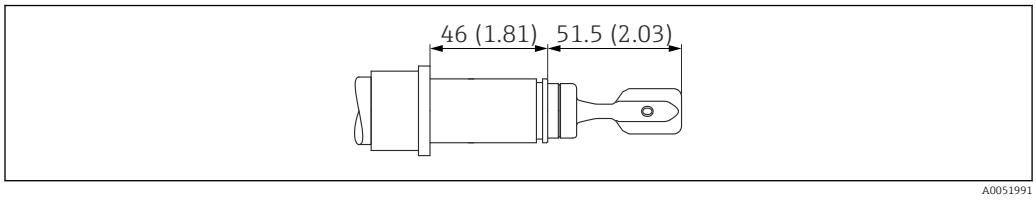

25 Ingold fitting 25 x 46 mm (2.52 in). Unit of measurement mm (in)

Flush-mounted tank connection for installation in weld-in adapter

- Pressure rating, temperature: ≤ 40 bar (580 psi), ≤ +100 °C (+212 °F)
- Pressure rating, temperature: ≤ 25 bar (363 psi), ≤ 140 °C (284 °F)
- Weight: 0.44 kg (0.97 lb)
- Accessories: weld-in adapter, optionally available as "Accessory enclosed"
- Scope of delivery: cap-nut, seal

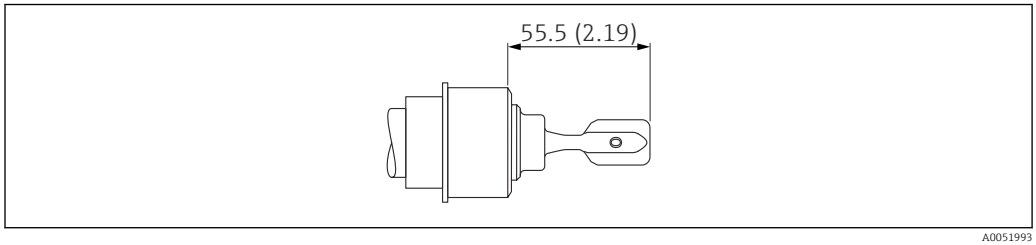

26 Flush-mounted tank connection. Unit of measurement mm (in)

DIN 11851 pipe connection

DN32 PN25
- Slotted nut
- Pressure rating: ≤ 40 bar (580 psi)/≤ 25 bar (363 psi)
- Temperature: ≤ 100 °C (212 °F)/ 140 °C (284 °F)
- Weight: 0.3 kg (0.66 lb)

DN40 PN25
- Slotted nut
- Pressure rating: ≤ 40 bar (580 psi)/≤ 25 bar (363 psi)
- Temperature: ≤ 100 °C (212 °F)/≤ 140 °C (284 °F)
- Weight: 0.35 kg (0.77 lb)

DN50 PN25
- Slotted nut
- Pressure rating: ≤ 25 bar (363 psi)
- Temperature: ≤ 140 °C (284 °F)
- Weight: 0.47 kg (1.04 lb)

A seal is not included in the delivery. The maximum temperature and maximum pressure depend on the clamping ring and sealing element used (according to the process connection design). The lowest value applies in each case.

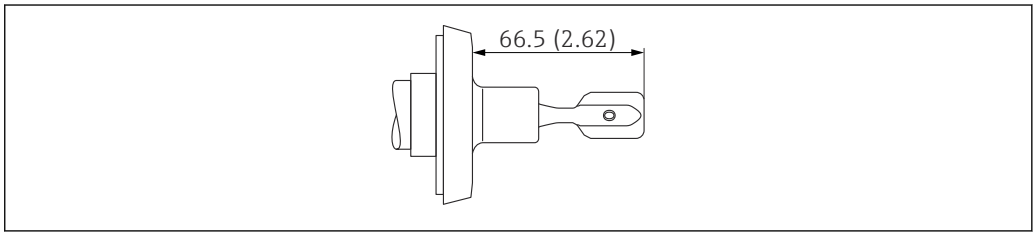

27 *DIN 11851 pipe connection. Unit of measurement mm (in)*

DIN 11864-1 pipe connection

DIN 11864-1 A DN50 pipe DIN 11850
- Slotted nut
- Pressure rating: ≤ 25 bar (363 psi)
- Temperature: ≤ 140 °C (284 °F)
- Weight: 0.47 kg (1.04 lb)

A seal is not included in the delivery. The maximum temperature and maximum pressure depend on the clamping ring and sealing element used (according to the process connection design). The lowest value applies in each case.

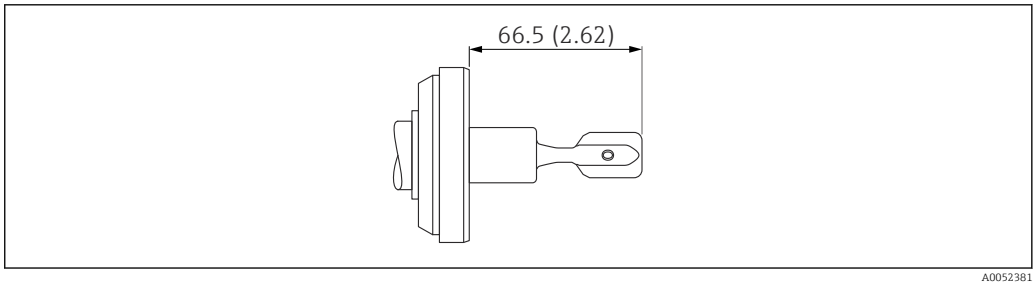

28 *DIN 11864-1 pipe connection. Unit of measurement mm (in)*

DRD

DRD 65 mm (2.56 in)
- Pressure rating, temperature: ≤ 40 bar (580 psi), ≤ +100 °C (+212 °F)
- Pressure rating, temperature: ≤ 25 bar (363 psi), ≤ 140 °C (284 °F)
- Weight: 0.43 kg (0.95 lb)
- Accessories: Weld-in flange with PTFE flat seal, optionally available to order as "Accessories"

A seal is not included in the delivery. The maximum temperature and maximum pressure depend on the clamping ring and sealing element used (according to the process connection design). The lowest value applies in each case.

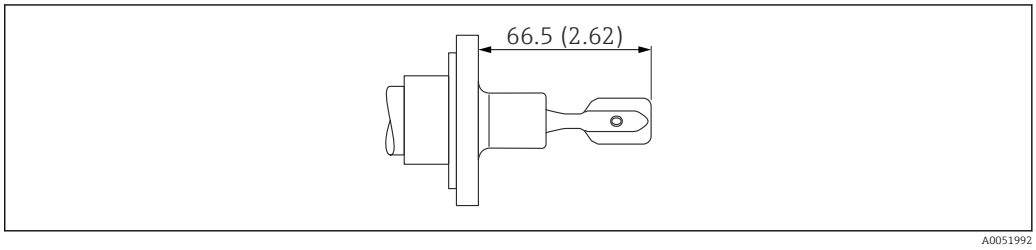

29 *DRD. Unit of measurement mm (in)*

SMS 1145 pipe connection

SMS 2" PN25
- Pressure rating: ≤ 25 bar (363 psi)
- Temperature: ≤ 140 °C (284 °F)
- With cap nut
- Weight: 0.33 kg (0.72 lb)

A seal is not included in the delivery. The maximum temperature and maximum pressure depend on the clamping ring and sealing element used (according to the process connection design). The lowest value applies in each case.

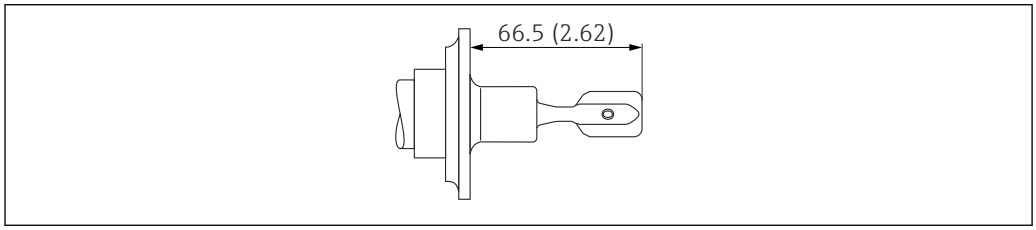

A0051994

30 SMS 1145 pipe connection. Unit of measurement mm (in)

Varivent (Varinline)

Varivent N pipe DN65-162 PN25
- Pressure rating: ≤ 25 bar (363 psi)
- Temperature: ≤ 150 °C (302 °F)
  Suitable for GEA Tuchenhagen
- Weight: 0.72 kg (1.59 lb)

A seal is not included in the delivery. The maximum temperature and maximum pressure depend on the clamping ring and sealing element used (according to the process connection design). The lowest value applies in each case.

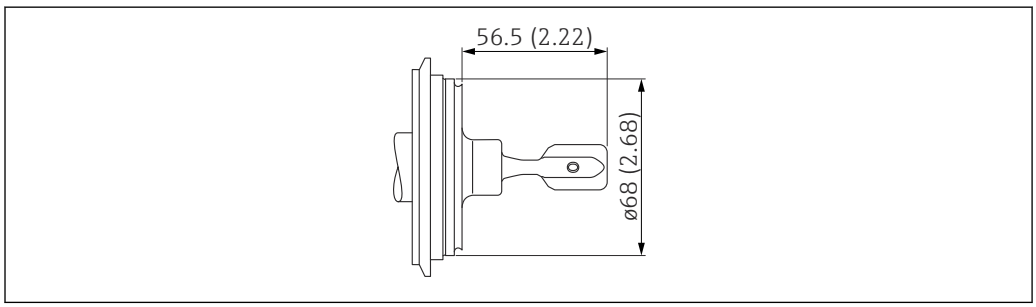

A0051996

31 Varivent N pipe DN65-162 PN25. Unit of measurement mm (in)

Tri-Clamp

ISO2852 DN25-38 (1 to 1 ½"), DIN32676 DN25-40
- Pressure rating: ≤ 25 bar (363 psi)
- Temperature: ≤ 150 °C (302 °F)
- Weight: 0.3 kg (0.66 lb)

ISO2852 DN40-51 (2"), DIN32676 DN50
- Pressure rating: ≤ 25 bar (363 psi)
- Temperature: ≤ 150 °C (302 °F)
- Weight: 0.3 kg (0.66 lb)

The Tri-Clamp connection is NA Connect-compatible.

A seal is not included in the delivery. The maximum temperature and maximum pressure depend on the clamping ring and sealing element used (according to the process connection design). The lowest value applies in each case.

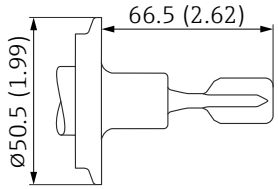

32 *Tri-Clamp 1 to 1 ½". Unit of measurement mm (in)*

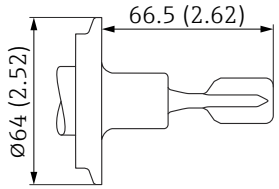

33 *Tri-Clamp 2". Unit of measurement mm (in)*

Weight

Basic weight: 0.65 kg (1.43 lb)
The basic weight comprises:
- Probe design: compact version
- Electronic insert
- Housing: single compartment, plastic with cover
- Thread, G ¾

Differences in weight are caused by the housing and cover selected.

Housing
- Single compartment, aluminum, coated: 0.8 kg (1.76 lb)
- Single compartment; 316L, hygienic: 0.45 kg (0.99 lb)
- Dual compartment, L-shaped; aluminum, coated: 1.22 kg (2.69 lb)

Temperature spacer
0.6 kg (1.32 lb)

Pressure-tight feedthrough
0.7 kg (1.54 lb)

Pipe extension
- 1 000 mm: 0.9 kg (1.98 lb)
- 50 in: 1.15 kg (2.54 lb)

Process connection

See "Process connections" section

Protective cover, plastic
0.2 kg (0.44 lb)

Protective cover, 316L
0.93 kg (2.05 lb)

Materials

Materials in contact with process

Process connection and pipe extension

316L (1.4404 or 1.4435)

Tuning fork

316L (1.4435)

Seals

Scope of delivery including seal
- Ingold fitting, seal material: EPDM (in compliance with FDA, USP Class VI)
- Flush-mounted tank connection for installation in welding neck, seal material: silicone

Materials not in contact with process

Single compartment housing, plastic

- Housing: PBT/PC
- Dummy cover: PBT/PC
- Transparent cover: PA12
- Cover with sight glass: PBT/PC and PC
- Cover seal: EPDM
- Potential equalization: 316L
- Seal under potential equalization: EPDM
- Plug: PBT-GF30-FR
- M20 cable gland: PA
- Seal on plug and cable gland: EPDM
- Threaded adapter as replacement for cable glands: PA66-GF30
- Nameplate: plastic foil
- TAG plate: plastic foil, metal or provided by the customer

Aluminum housing, coated

- Housing: aluminum EN AC 43400
- Dummy cover: aluminum EN AC 43400
- Cover seal materials: HNBR
- Cover seal materials: FVMQ
- Plug: aluminum
  Plastic (PBT-GF30-FR) in Ex-free, Ex i or IS combination with cable gland, plastic, M20 thread or G ½ thread
- Nameplate: plastic foil
- TAG plate: plastic foil, stainless steel or provided by the customer
- M20 cable glands: select material (stainless steel, nickel-plated brass, polyamide)

Stainless steel housing, 316L, hygienic

- Housing: stainless steel AISI 316L (1.4404)
- Dummy cover: stainless steel AISI 316L (1.4404)
- Cover with polycarbonate sight glass optionally available. For dust ignition-proof applications, the sight glass is made of borosilicate.
- Cover seal materials: VMQ
- Plug: stainless steel or plastic
  - Plastic (PBT-GF30-FR) in Ex-free, Ex i or IS combination with cable gland, plastic, M20 thread or G ½ thread
  - Stainless steel for cable glands made of stainless steel or nickel or for Ex t, Ex ia IIIC
- Nameplate: stainless steel housing labeled directly
- TAG plate: plastic foil, stainless steel or provided by the customer
- M20 cable glands: select material (stainless steel, nickel-plated brass, polyamide)

Surface roughness

Surface roughness of the surface in contact with the process:
Ra < 1.5 µm (59 µin)

Optional:
Ra < 0.3 µm (12 µin) mechanically polished (3-A, EHEDG)

Mechanical construction of Density Calculator QML51

Terminal

- Plug-in screw terminals
- Coded supply terminal (mechanical coding prevents incorrect insertion of the terminal)
- Clamping range: 0.5 to 2.5 mm^2 (20 to 13 AWG)

Use flexible stranded conductors only with ferrules.

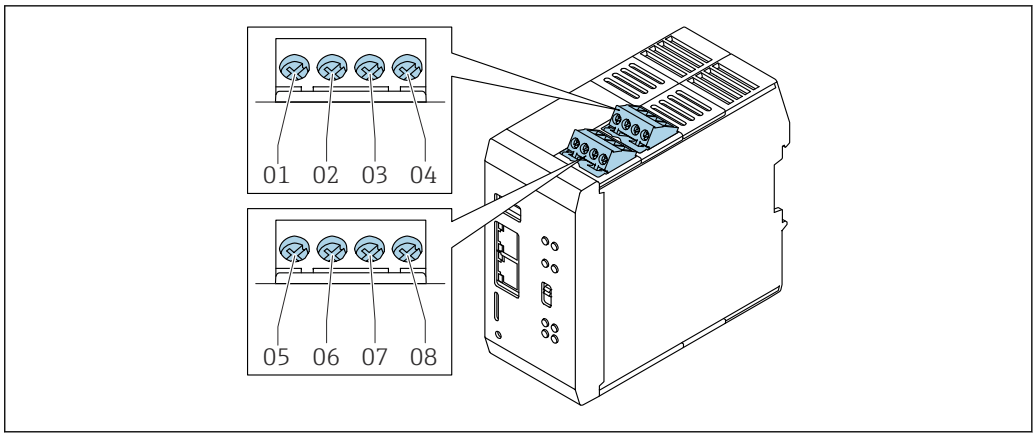

34 Pulse and analog input

01 Channel 3 (+), default setting: PFM
02 Channel 3 (-), default setting: PFM
03 Channel 4 (+), default setting: 4 to 20 mA(HART)
04 Channel 4 (-), default setting: 4 to 20 mA(HART)
05 Channel 1 (+), default setting: PFM
06 Channel 1 (-), default setting: PFM
07 Channel 2 (+), default setting: 4 to 20 mA(HART)
08 Channel 2 (-), default setting: 4 to 20 mA(HART)

The channels are preset (factory setting). The configuration can be changed later.

Design, dimensions

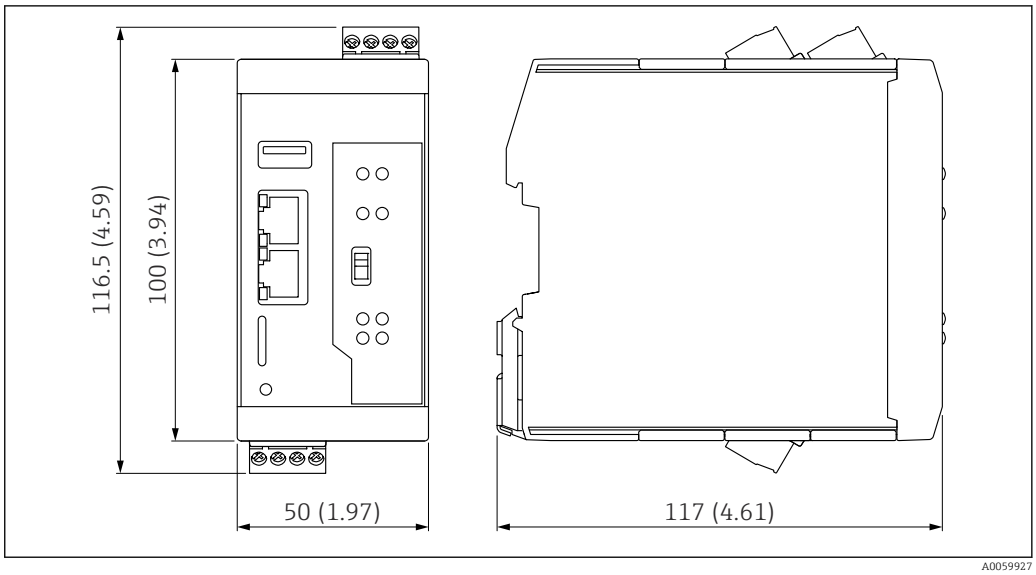

35 Dimensions. Unit of measurement mm (in)

Weight

260 g (0.57 lb)

Materials

Housing: Polyamide

Operability

Local display

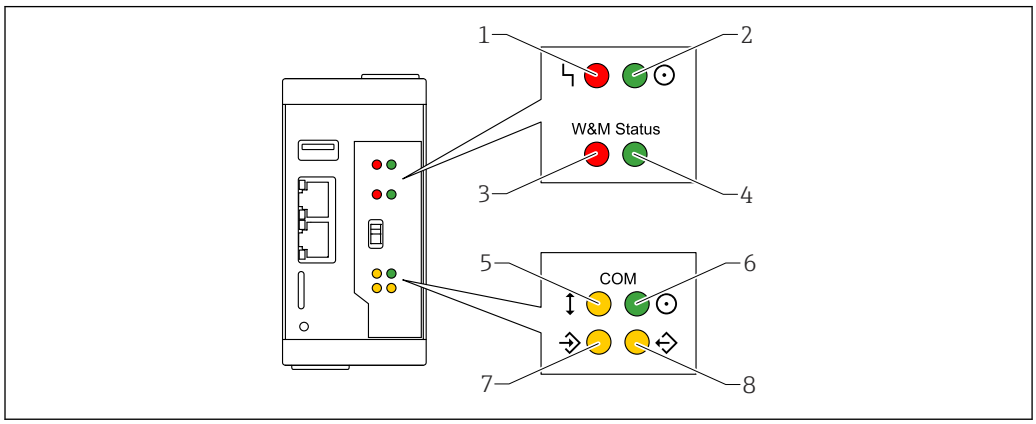

36 Description of LED statuses

1 *Red LED: Fault*
2 *Green LED: Power supply status*
3 *Red LED: verification switch in the locked position (no function assigned for Density Calculator QML51)*
4 *Green LED: verification switch in the unlocked position (no function assigned for Density Calculator QML51)*
5 *Yellow LED: Field communication status*
6 *Green LED: Power supply status of the communication interface*
7 *Yellow LED: Incoming data packets*
8 *Yellow LED: Outgoing data packets*

Controls

Reset button

The device is reset to the factory settings.

Use a pen tip to press the reset button.

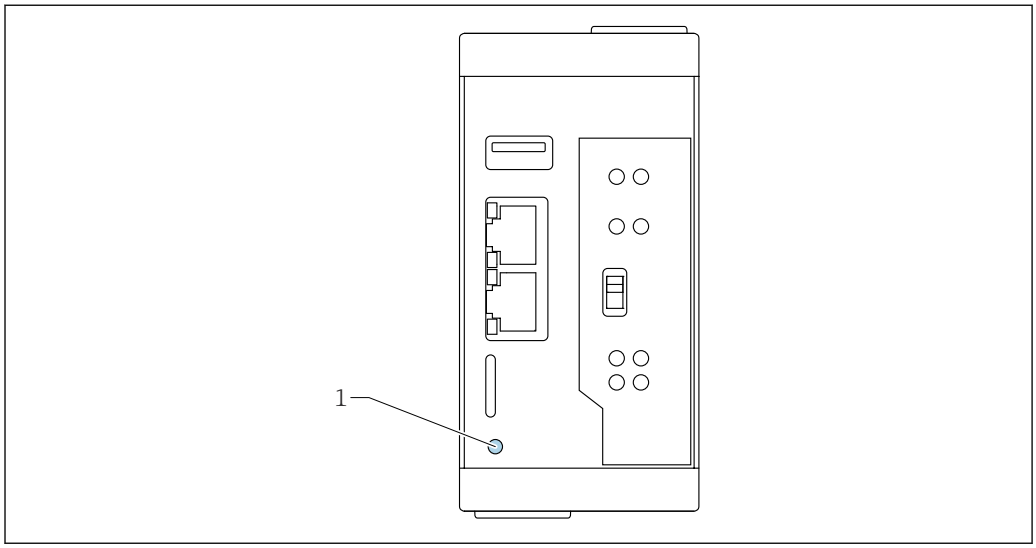

37 Reset button position

1 *Reset button*

Hardware switch (no function)

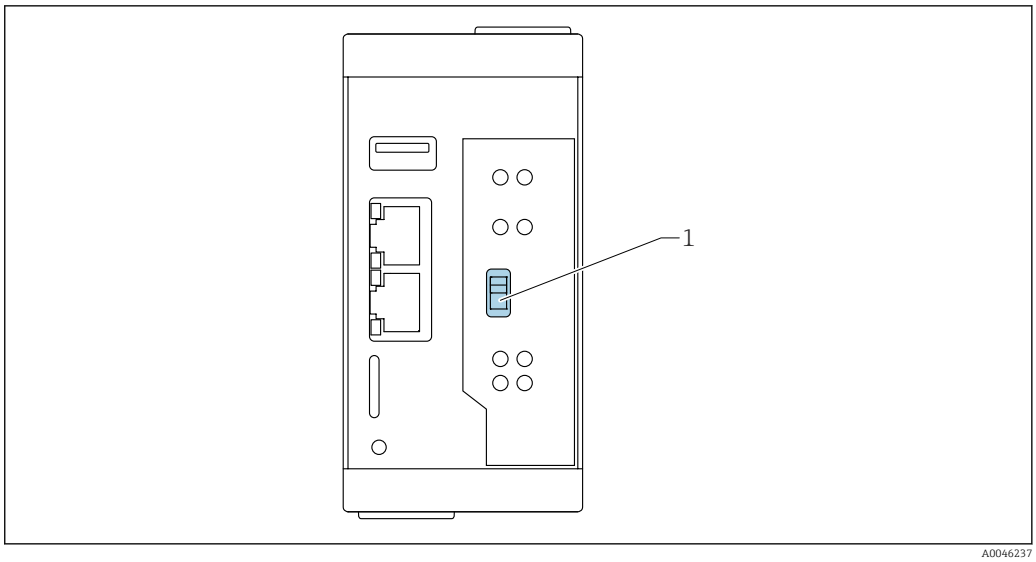

1 Hardware switch (no function)

This switch has no function on the Density Calculator QML51.

Interfaces for data transmission

The device configuration (user data, log files, certificates, or diagnostic codes) can be saved.

Prerequisites:
- To save a backup to a USB stick or an SD card, an appropriate permitted storage medium must be available and have been detected by the device.
- If the backup is to be saved on an FTP server, an FTP server must first be set up and connection must be possible.

A backup can be protected with a password by the system. The password can be freely selected without restriction. A password-protected backup can only be imported to another system with the associated password.

Card slot

The microSD card is not included in the delivery.

Endress+Hauser recommends using microSD cards with the following parameters:
- Storage capacity: 8 to 64 GB
- Temperature range: −40 to 85 °C (−40 to 185 °F)

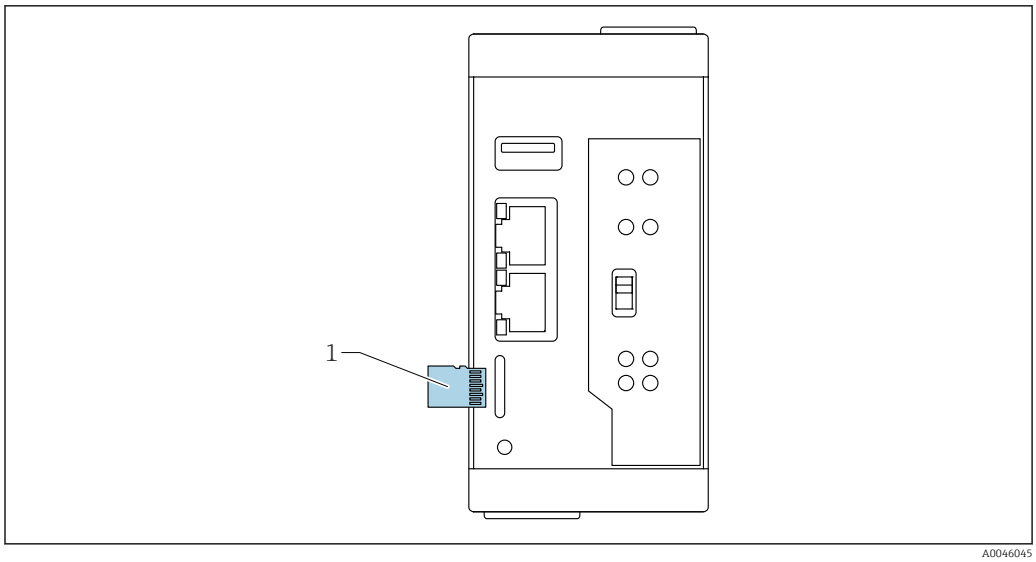

38 Position of the card slot

1 microSD card

USB port

USB (type A) port data:
- USB 2.0 Host
- Up to 480 Mbit/s
- 5 V_{DC} up to 1.5 A

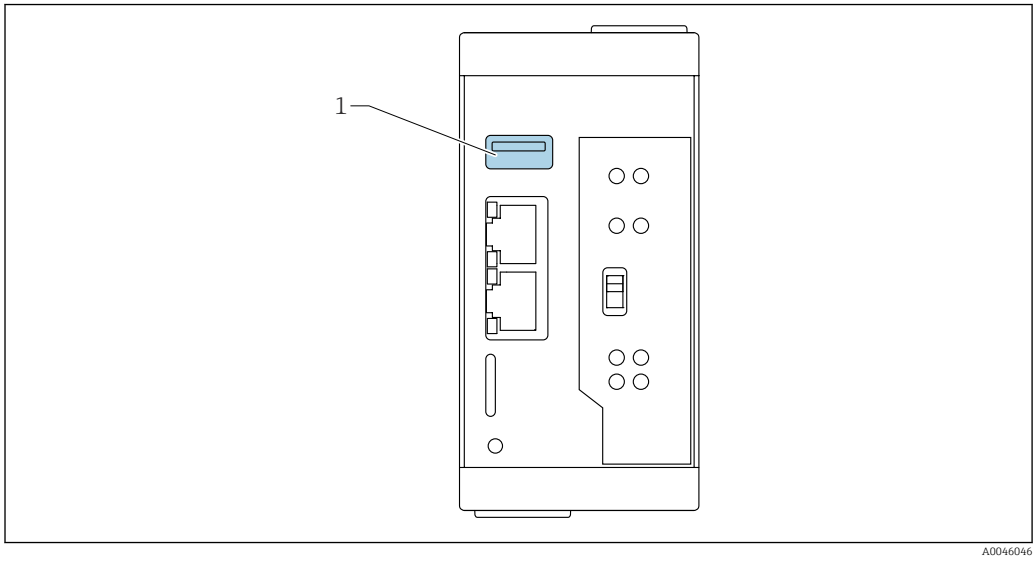

39 USB port position

1 USB port

Certificates and approvals

Current certificates and approvals for the product are available at www.endress.com on the relevant product page:

1. Select the product using the filters and search field.
2. Open the product page.
3. Select **Downloads**.

CE mark

The measuring system meets the legal requirements of the applicable EU Directives. These are listed in the corresponding EU Declaration of Conformity along with the standards applied.

Endress+Hauser confirms that the device has been successfully tested by applying the CE mark.

Ex approval

For available Ex approvals, see Product Configurator.

All explosion protection data are listed in a separate document, which is available on request.

Other standards and guidelines

IEC 60529
Degrees of protection provided by enclosures (IP code)

IEC 61010
Safety requirements for electrical equipment for measurement, control and laboratory use

EN 61326 series
EMC product family standard for electrical equipment for measurement, control and laboratory use

NAMUR
User association of automation technology in process industries

Additional information on Liquiphant Density

Material compliance for contact with food

The device has been developed for food contact applications. Versions can be selected that meet the following requirements:
- EU Food Contact Material (EC) 1935/2004
- US Food Contact Material FDA CFR 21
- CN Food Contact Material GB 4806

Hygienic design compliance

3-A and EHEDG-certified versions of the sensor are suitable for Cleaning-in-Place (CIP) and Sterilization-in-Place (SIP) without removing them from the plant. This means that the sensor does not need to be removed during cleaning. The maximum permitted pressure and temperature values for sensor and adapter must not be exceeded (see notes in this TI).

- Notes on installation and certification in accordance with 3-A and EHEDG:
  SD02503F document "Hygienic approvals"
- Information on 3-A and EHEDG-certified adapters:
  TI00426F document "Weld-in adapters, process adapters and flanges"

cGMP

The device was developed for life sciences applications. You can select versions with a cGMP declaration (Current Good Manufacturing Practice) for process-wetted parts with the following content in English:
- Materials of construction
- Polishing and surface treatment
- Materials and compounds compliance table: USP, FDA
- TSE/BSE-compliant based on EMA/410/01 Rev.3

General material compliance

Endress+Hauser guarantees compliance with all relevant laws and regulations, including the current guidelines for materials and substances.

Examples:
- RoHS
- China RoHS
- REACH
- POP VO (Stockholm Convention)

For further information and general declarations of compliance, see the Endress+Hauser website www.endress.com

TSE (BSE) compliance (ADI free - Animal Derived Ingredients)

Versions can be selected that meet the following requirements:
- The parts of this product in contact with the process are not made from materials derived from animals **or**
- The parts of this product in contact with the process correspond to at least the requirements of the EMA/410/01 Rev. 3 guideline (TSE (BSE) compliant)

Ordering information

Detailed ordering information is available from your nearest sales organization www.addresses.endress.com or in the Product Configurator at www.endress.com:

1. Select the product using the filters and search field.
2. Open the product page.
3. Select **Configuration**.

Product Configurator - the tool for individual product configuration
- Up-to-the-minute configuration data
- Depending on the device: direct input of information specific to the measuring point, such as the measuring range or operating language
- Automatic verification of exclusion criteria
- Automatic creation of the order code and its breakdown in PDF or Excel output format
- Ability to order directly in the Endress+Hauser Online Shop

Service

- Cleaned of oil+grease (wetted)
- PWIS-free (paint-wetting impairment substances)
  The plastic protective cover and weld-in adapters are excluded from the PWIS cleaning.

Test reports, declarations and inspection certificates

All test reports, declarations and inspection certificates are provided electronically in the *Device Viewer*:
Enter the serial number from the nameplate
(https://www.endress.com/de/pages/supporting-tools/device-viewer)

Product documentation on paper
Test reports, declarations and inspection certificates in hard copy can optionally be ordered with feature 570 "Service", Version I7 "Product documentation on paper". The documents are then provided with the device upon delivery.

Test, certificate, declaration

Versions can be selected for which the following certificates are available:
- Inspection certificate 3.1, EN10204 (material certificate, wetted parts)
- AD 2000 (wetted parts), declaration, excluding cast parts
- CoC ASME BPE, declaration
- ASME B31.3 process piping, declaration
- Compliance with requirements derived from cGMP, Declaration
- EU Food Contact Material (EC) 1935/2004
- US Food Contact Material FDA CFR 21
- CN Food Contact Material GB 4806
- Surface roughness test ISO 4287/Ra, (wetted parts), test report
- Delta-ferrite test, internal procedure (wetted parts), test report

Documentation currently available on the Endress+Hauser website: www.endress.com → Downloads or with the serial number of the device under Online Tools in the Device Viewer.

TAG

Measuring point (TAG)

The device can be ordered with a tag name.

Location of tag name
Select in the additional specification:
- Stainless steel tag plate
- Paper adhesive label
- Tag provided by the customer
- RFID tag
- RFID tag + stainless steel tag plate
- RFID tag + paper adhesive label
- RFID tag + tag provided by the customer
- IEC 61406 stainless steel tag
- IEC 61406 stainless steel tag + NFC tag
- IEC 61406 stainless steel tag, stainless steel tag
- IEC 61406 stainless steel tag + NFC, stainless steel tag
- IEC 61406 stainless steel tag, plate supplied
- IEC 61406 stainless steel tag + NFC, plate supplied

Definition of tag name
Specify in the additional specification:
3 lines of maximum 18 characters each
The specified tag name appears on the selected plate and/or on the RFID tag.

Accessories

Accessories

The contents of this section apply to the Liquiphant.
See also the Operating Instructions for the density calculator: BA02545S.

The accessories currently available for the product can be selected at www.endress.com:

1. Select the product using the filters and search field.
2. Open the product page.
3. Select **Spare parts & Accessories**.

Device Viewer

All the spare parts for the device, along with the order code, are listed in the *Device Viewer* (www.endress.com/deviceviewer).

Weather protection cover for dual compartment housing, aluminum

The weather protection cover can be ordered together with the device via the "Accessory enclosed" product structure.

It is used to protect against direct sunlight, precipitation and ice.

The 316L weather protection cover is suitable for dual compartment housings made of aluminum. The delivery includes the holder for direct mounting on the housing.

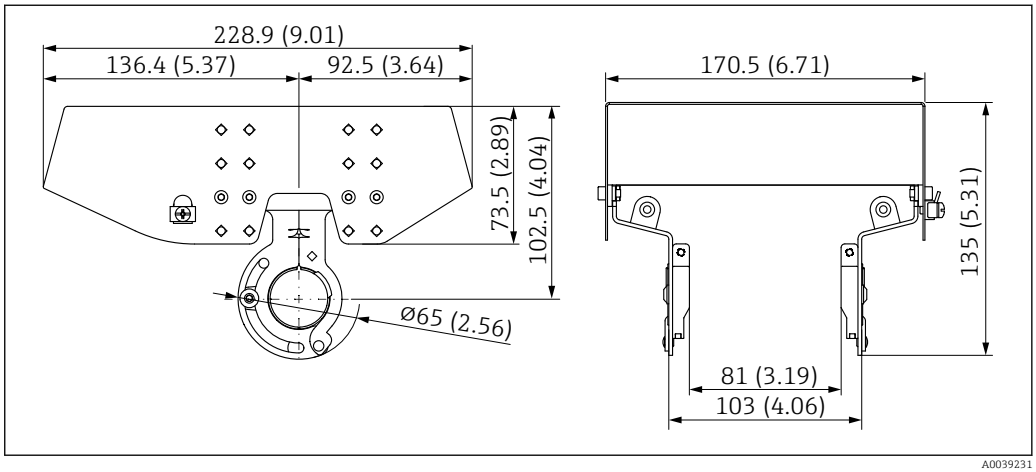

40 *Dimensions of weather protection cover, 316L, XW112. Unit of measurement mm (in)*

Material
- Weather protection cover: 316L
- Clamping screw: A4
- Bracket: 316L

Accessory order code:
71438303

Special Documentation SD02424F

Weather protection cover for aluminum single compartment housing

The weather protection cover can be ordered together with the device via the "Accessory enclosed" product structure.

It is used to protect against direct sunlight, precipitation and ice.

The plastic weather protection cover is suitable for the single compartment housing made of aluminum. The delivery includes the holder for direct mounting on the housing.

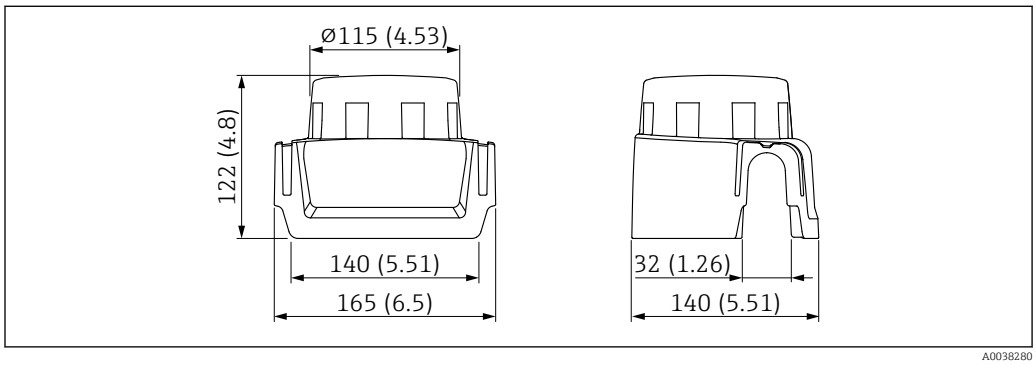

41 Weather protection cover for aluminum single compartment housing. Unit of measurement mm (in)

Material
Plastic

Accessory order code:
71438291

Special Documentation SD02423F

M12 socket

The M12 sockets listed are suitable for use in the temperature range −25 to 70 °C (−13 to 158 °F).

M12 socket IP69
- Terminated at one end
- Angled
- 5 m (16 ft) PVC cable (orange)
- Slotted nut 316L (1.4435)
- Body: PVC
- Order number: 52024216

M12 socket IP67
- Angled
- 5 m (16 ft) PVC cable (gray)
- Slotted nut Cu Sn/Ni
- Body: PUR
- Order number: 52010285

Weld-in adapter

Various weld-in adapters are available for installation in vessels or pipes. The adapters are optionally available with inspection certificate 3.1 EN10204.

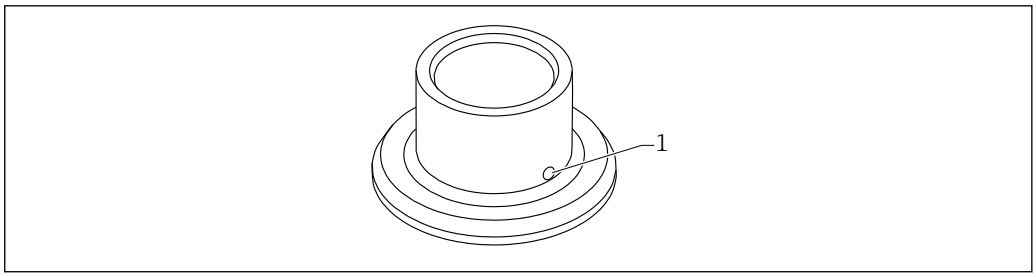

42 *Weld-in adapter with leakage hole (sample view)*

1 Leakage hole

Weld in the weld-in adapter in such a way that the leakage hole is pointing downwards. This enables any leaks to be detected quickly.

- G 1, Ø53 mounting on the pipe
- G 1, Ø60 flush mount on the vessel
- G ¾, Ø55 flush mount
- G 1 sensor adjustable
- RD52 sensor adjustable

For detailed information, see "Technical Information" TI00426F (Weld-in adapters, process adapters and flanges)

Available in the Download Area of the Endress+Hauser website (www.endress.com/downloads).

Accessories for Density Computer QML51

See Technical Information for Density Computer QML51 (TI01866F)

Documentation

For an overview of the scope of the associated Technical Documentation, refer to the following:
- *Device Viewer* (www.endress.com/deviceviewer): Enter the serial number from the nameplate
- *Endress+Hauser Operations app*: Enter serial number from nameplate or scan matrix code on nameplate.

Standard documentation

Document type: Operating Instructions (BA)
Installation and initial commissioning – contains all the functions in the operating menu that are needed for a normal measuring task. Functions beyond this scope are not included.

Document type: Brief Operating Instructions (KA)
Quick guide to the first measured value – includes all essential information from incoming acceptance to electrical connection.

Document type: Safety Instructions, certificates
Depending on the approval, Safety Instructions are also supplied with the device, e.g. XA. This documentation is an integral part of the Operating Instructions.
The nameplate indicates the Safety Instructions (XA) that are relevant to the device.

Supplementary device-dependent documentation

Operating Instructions

For **Liquiphant FTL51B Density** with Density Calculator QML51: BA02593F

For **Liquiphant FTL62 Density** with Density Calculator QML51: BA02599F

For **Liquiphant FTL63 Density** with Density Calculator QML51: BA02600

Special Documentation

- BA02545S: Density Calculator QML51
- SD03498S: OPC UA server
- SD03501S: Modbus TCP server

- SD02398F: Sliding sleeve (for Liquiphant FTL51B, installation instructions)
- SD01622P: Weld-in adapters (installation instructions)
- TI00426F: Weld-in adapters, process adapters and flanges (overview)

Registered trademarks

Modbus®
Registered trademark of SCHNEIDER AUTOMATION, INC.

OPC UA
Registered trademark of the OPC Foundation, Scottsdale, Arizona, USA

HART®
Registered trademark of the FieldComm Group, Austin, Texas, USA

71783274

www.addresses.endress.com

Endress+Hauser

People for Process Automation