TI01662F/00/EN/07.26-00
71783267
2026-09-11

Technical Information
Liquiphant FTL62

Vibronic
HART,
PROFINET over Ethernet-APL

Level switch with highly corrosion-resistant coating for liquids

Field of application

- Level switch for all liquids, for minimum or maximum detection in vessels, e.g. process tanks, storage tanks, and piping, even in hazardous areas
- Different coatings, plastics or enamel, offer a high degree of corrosion protection for applications in aggressive media
- Process temperature range: −50 to +150 °C (−58 to +302 °F)
- Pressures up to 40 bar (580 psi)
- Viscosities up to 10 000 mPa·s
- Ideal substitute for float switches; reliable function is not affected by flow, turbulence, air bubbles, foam, vibration, solids content or buildup

Benefits

- Approved for safety systems with functional safety requirements up to SIL 2/SIL 3 in accordance with IEC 61508 (in combination with HART)
- Functional safety: monitoring of the oscillation frequency of the vibrating fork
- Heartbeat Technology - verification and monitoring function on demand without interrupting the process
- With Bluetooth® wireless technology

Endress+Hauser
People for Process Automation

Table of contents

About this document . . . 4
Safety symbols . . . 4
Electrical symbols . . . 4
Symbols for certain types of Information . . . 4
Symbols in graphics . . . 4
Communication-specific symbols . . . 4
List of abbreviations . . . 4
Graphic conventions . . . 5

Function and system design . . . 6
Measuring principle . . . 6
Measuring system . . . 6
Communication and data processing . . . 6
Dependability . . . 6

Input . . . 6
Measured variable . . . 6
Measuring range . . . 6

Output . . . 7
Output signal . . . 7
Signal on alarm . . . 7
Load . . . 7
Damping . . . 7
Switch output . . . 8
Ex connection data . . . 8
Protocol-specific data . . . 8
HART data . . . 9
Heartbeat Technology . . . 10

Power supply . . . 10
Terminal assignment . . . 10
Available device plugs . . . 10
Supply voltage . . . 11
Electrical connection . . . 12
Potential equalization . . . 12
Terminals . . . 12
Cable entries . . . 12
Cable specification . . . 13
Overvoltage protection . . . 13

Performance characteristics . . . 13
Reference operating conditions . . . 13
Take switch point into consideration . . . 14
Maximum measurement error . . . 15
Resolution . . . 15
Response time . . . 15
Dynamic behavior, current output . . . 15
Dynamic behavior, digital output . . . 15
Hysteresis . . . 15
Non-repeatability . . . 16
Influence of the process temperature . . . 16
Influence of the process pressure . . . 16
Influence of the density of the process medium (at room temperature and normal pressure) . . . 16

Installation . . . 17
Mounting location, orientation . . . 17
Installation instructions . . . 18
Installing the device in piping . . . 20
Aligning the cable entry . . . 20
Special installation instructions . . . 21

Environment . . . 22
Ambient temperature range . . . 22
Storage temperature . . . 24
Humidity . . . 24
Operating height . . . 24
Climate class . . . 24
Degree of protection . . . 24
Vibration resistance . . . 24
Shock resistance . . . 25
Mechanical load . . . 25
Pollution degree . . . 25
Electromagnetic compatibility (EMC) . . . 25

Process . . . 25
Process temperature range . . . 25
Thermal shock . . . 25
Process pressure range . . . 25
Overpressure limit . . . 26
Medium density . . . 26
Viscosity . . . 26
Pressure tightness . . . 26
Solids contents . . . 26

Mechanical construction . . . 26
Design, dimensions . . . 26
Dimensions . . . 27
Coating material and layer thickness . . . 34
Weight . . . 35
Materials . . . 36

Operability . . . 38
Operation concept . . . 38
Languages . . . 38
Local operation . . . 39
Local display . . . 40
Remote operation . . . 41
Supported operating tools . . . 42
System integration . . . 42
HistoROM data management . . . 42

Certificates and approvals . . . 43
CE mark . . . 43
RCM marking . . . 43
Ex approval . . . 43
Corrosion test . . . 43
General material compliance . . . 43
Overfill protection system . . . 43
Functional safety . . . 43
Radio approval . . . 44
CRN approval . . . 44

Pressure equipment with permitted pressure less than 200 bar, no pressure-bearing volume 44
Process seal as per ANSI/ISA 12.27.01 44
EAC conformity 44
ASME B 31.3/31.1 44
HART certification 44
PROFINET over Ethernet-APL certification 44

Ordering information 45
Service 45
Test reports, declarations and inspection certificates 45
Test, certificate, declaration 45
TAG 45

Application packages 46
Heartbeat Technology 46
Heartbeat Diagnostics 46
Heartbeat Verification 46
Heartbeat Monitoring 47
Proof testing (HART) 47

Accessories 47
Device Viewer 47
Weather protection cover: 316L, XW112 47
Weather protection cover, plastic, XW111 48
M12 socket 48
Field Xpert SMT70 49
DeviceCare SFE100 49
FieldCare SFE500 49

Documentation 49
Standard documentation 49

Registered trademarks 50

About this document

Safety symbols

DANGER
This symbol alerts you to a dangerous situation. Failure to avoid this situation will result in serious or fatal injury.

WARNING
This symbol alerts you to a potentially dangerous situation. Failure to avoid this situation can result in serious or fatal injury.

CAUTION
This symbol alerts you to a potentially dangerous situation. Failure to avoid this situation can result in minor or medium injury.

NOTICE
This symbol alerts you to a potentially harmful situation. Failure to avoid this situation can result in damage to the product or something in its vicinity.

Electrical symbols

Ground connection
Grounded clamp, which is grounded via a grounding system.

Protective earth (PE)
Ground terminals, which must be grounded prior to establishing any other connections. The ground terminals are located on the inside and outside of the device.

Symbols for certain types of Information

Permitted
Procedures, processes or actions that are permitted.

Forbidden
Procedures, processes or actions that are forbidden.

Tip
Indicates additional information

Reference to documentation

Reference to another section

1., 2., 3. Series of steps

Symbols in graphics

A, B, C ... View

1, 2, 3 ... Item numbers

Hazardous area

Safe area (non-hazardous area)

Communication-specific symbols

Bluetooth® wireless technology
Wireless data transmission between devices over a short distance via radio technology.

List of abbreviations

PN
Nominal pressure

MWP
Maximum working pressure
The maximum working pressure is indicated on the nameplate.

DTM
Device Type Manager

Operating tool

The term "operating tool" is used in place of the following operating software:
- FieldCare/DeviceCare for operation via HART communication and PC
- SmartBlue app for operation using an Android or iOS smartphone or tablet

PLC
Programmable logic controller (PLC)

Graphic conventions

- Installation, explosion and electrical connection drawings are presented in simplified format
- Devices, assemblies, components and dimensional drawings are presented in reduced-line format
- Dimensional drawings are not to-scale representations; the dimensions indicated are rounded off to 2 decimal places
- Unless otherwise described, flanges are presented with sealing surface form EN 1091-1, B2; ASME B16.5, RF; JIS B2220, RF

Function and system design

Measuring principle

The sensor's vibrating fork vibrates at its natural frequency. As soon as the liquid covers the vibrating fork, the oscillation frequency decreases. The change in frequency causes the level switch to switch.

Point level measurement

Maximum or minimum detection for liquids in tanks or pipes in all industries. Suitable for leakage monitoring, pump dry-running protection or overfill prevention, for example.

Specific versions are suitable for use in hazardous areas.

The level switch differentiates between the "covered" and "not covered" conditions.

Depending on the MIN (minimum detection) or MAX (maximum detection) modes, there are two possibilities in each case: OK status and demand mode.

OK status
- In MIN mode, the vibrating fork is covered, e.g. pump dry-run protection
- In MAX mode, the vibrating fork is not covered, e.g. overfill protection

Demand mode
- In MIN mode, the vibrating fork is not covered, e.g. pump dry-run protection
- In MAX mode, the vibrating fork is covered, e.g. overfill protection system

Measuring system

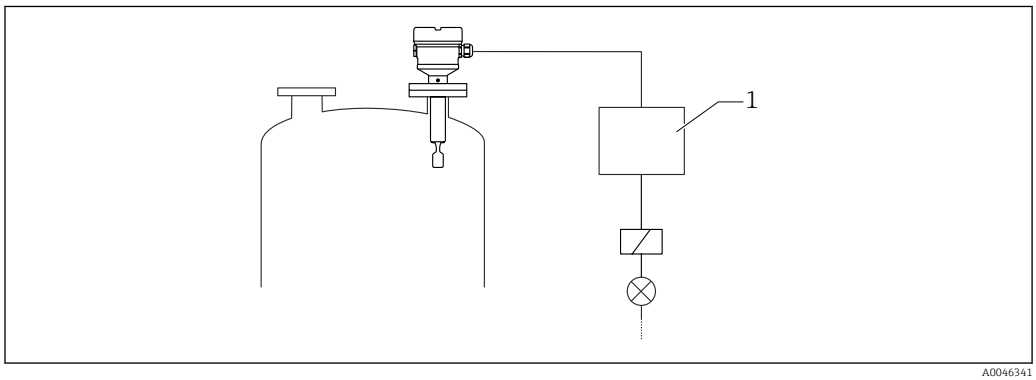

1 Example of a measuring system

1 Switching unit, PLC etc.

Communication and data processing

- 4 to 20 mA with HART communication protocol
- PROFINET over Ethernet-APL: 10BASE-T1L communication protocol
- Bluetooth® wireless technology (optional)

Dependability

IT security

The manufacturer warranty is valid only if the product is installed and used as described in the Operating Instructions. The product is equipped with security mechanisms to protect it against any inadvertent changes to the settings.

IT security measures, which provide additional protection for the product and associated data transfer, must be implemented by the operators themselves in line with their security standards.

Input

Measured variable

The point level signal is triggered according to the operating mode (minimum or maximum detection) when the level exceeds or falls below the relevant point level.

Measuring range

Depends on the installation location and the pipe extension ordered

Sensor length:
- With plastic coating, maximum 3 m (9.8 ft)
- With enamel coating, maximum 1.2 m (3.9 ft)

Output

Output signal

HART

SIO mode
8/16 mA (SIO mode) with superimposed digital communication protocol HART, 2-wire

Continuous operation
4 to 20 mA proportional to the oscillation frequency with superimposed digital communication protocol HART, 2-wire

For continuous current output, one of the following modes of operation can be selected:
- 4.0 to 20.5 mA
- NAMUR NE 43: 3.8 to 20.5 mA (factory setting)
- US mode: 3.9 to 20.8 mA

PROFINET over Ethernet-APL

10BASE-T1L, 2-wire 10 Mbit/s

Signal on alarm

Signal on alarm in accordance with NAMUR recommendation NE 43.

4 to 20 mA HART:
- Maximum alarm: can be set from 21.5 to 23 mA
- Minimum alarm: < 3.6 mA (factory setting)

PROFINET over Ethernet-APL:
- According to "Application layer protocol for decentralized periphery", Version 2.4
- Diagnostics according to PROFINET PA Profile 4.02

Load

4 to 20 mA passive, HART

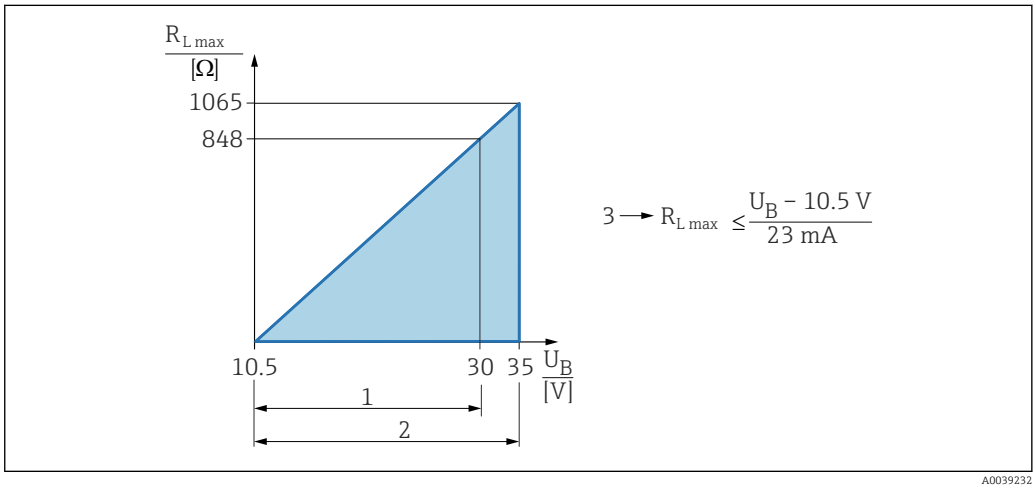

A0039232

1 Power supply DC 10.5 to 30 V Ex i
2 Power supply DC 10.5 to 35 V, for other types of protection and non-certified device versions
3 R_{Lmax} maximum load resistance
U_B Supply voltage

Operation via handheld terminal or PC with operating program: take minimum communication resistance of 250 Ω into consideration.

Damping

HART
- The damping affects all outputs, including the output signal and the display.
- It is only available in 4 to 20 mA continuous operation and has no effect on the SIO mode.
- The damping can be adjusted continuously between 0 to 999 s using the local display, Bluetooth® wireless technology, handheld control unit, or PC with operating program.
- Factory setting: 1 s

PROFINET over Ethernet-APL
- The damping can only be activated for analog inputs 1 to 3.
- The damping can be adjusted continuously between 0 and 999 s.

The device uses various modules for cyclic data exchange with the control system.

Switch output

Preconfigured switching delay available for order:
- 0.5 s when the vibrating fork is covered and 1.0 s when it is uncovered (factory setting)
- 0.25 s when the vibrating fork is covered and 0.25 s when it is uncovered
- 1.5 s when the vibrating fork is covered and 1.5 s when the vibrating fork is uncovered
- 5.0 s when the vibrating fork is covered and 5.0 s when the vibrating fork is uncovered

The user can also set the switching delays for when the fork is covered and uncovered in the range from 1 to 60 seconds independently of one another.

(operation via display, Bluetooth® wireless technology or web browser, FieldCare, DeviceCare, AMS, PDM)

Ex connection data

See safety instructions (XA): All data relating to explosion protection are provided in separate Ex documentation and are available from the Downloads area of the Endress+Hauser website. The Ex documentation is supplied as standard with all devices approved for use in explosion hazardous areas.

Protocol-specific data

HART

- Manufacturer ID: 17 (0x11)
- Device type code: 0x11C4
- Device revision: 1
- HART specification: 7
- DD revision: 1
- Device description files (DTM, DD) information and files at:
  - www.endress.com
  - www.fieldcommgroup.org
- HART load: min. 250 Ω

HART device variables (preset at the factory)

The following measured values are assigned to the device variables at the factory:

Device variable	Measured value
Primary variable (PV) parameter (Primary variable) [1]	Level limit detection [2]
Secondary variable (SV) parameter (Secondary variable)	Sensor frequency [3]
Tertiary variable (TV) parameter (Third variable)	Fork state [4]
Quaternary variable (QV) parameter (Quaternary variable)	Sensor temperature

1) **Primary variable (PV)** parameter is always applied to the current output.
2) In limit detection, the initial state depends on the **Fork state** parameter (covered or uncovered) and the safety function (MIN or MAX)
3) Sensor frequency is the oscillation frequency of the fork
4) Fork state shows the status of the vibrating fork (**Fork covered** option/**Fork uncovered** option)

Choice of HART device variables

- Level limit detection
- Sensor frequency
- Fork state
- Sensor temperature
- Terminal current
  The terminal current is the read-back current on terminal block. Visibility depends on order options or device settings
- Terminal voltage
  Visibility depends on order options or device settings

Supported functions

- Burst mode
- Additional transmitter status
- Device locking

PROFINET over Ethernet-APL

Protocol	Application layer protocol for decentral device periphery and distributed automation, Version 2.4
Communication type	Ethernet Advanced Physical Layer 10BASE-T1L
Conformity class	Conformance class B
Netload Class	Netload Class II
Baud rates	Automatic 10 Mbit/s with full-duplex detection
Periods	From 32 ms
Polarity	Auto-polarity for automatic correction of crossed TxD and RxD pairs
Media Redundancy Protocol (MRP)	Yes
System redundancy support	System redundancy S2 (2 AR with 1 NAP)
Device profile	Application interface identifier 0xB360 Generic device (PA 4.02 Profile Discrete Input)
Manufacturer ID	0x11
Device type ID	0xA1C4
Device description files (GSD, FDI, DTM, DD)	Information and files at: ▪ www.endress.com On the product page for the device: Documents/Software → Device drivers ▪ www.profibus.org
Supported connections	▪ 2 x AR (IO Controller AR) ▪ 1 x AR (IO-Supervisor Device AR connection allowed) ▪ 1 x Input CR (Communication Relation) ▪ 1 x Output CR (Communication Relation) ▪ 1 x Alarm CR (Communication Relation)
Configuration options for device	▪ Manufacturer-specific software (FieldCare, DeviceCare) ▪ Web browser ▪ Device master file (GSD), can be read out via the integrated web server of the device ▪ DIP switch for setting the service IP address
Configuration of the device name	▪ DCP protocol ▪ Process Device Manager (PDM) ▪ Integrated web server
Supported functions	▪ Identification & Maintenance Simple device identification via: ▪ Control system ▪ Nameplate ▪ Measured value status The process variables are communicated with a measured value status ▪ Blinking feature via the local display for simple device identification and assignment ▪ Device operation via operating tools (e.g. FieldCare, DeviceCare, SIMATIC PDM)
System integration	For information on system integration, see Operating Instructions ▪ Cyclic data transmission ▪ Overview and description of the modules ▪ Status coding ▪ Startup parameterization ▪ Factory setting

HART data

- Minimum start-up voltage: 10.5 V
- Start-up current: > 3.6 mA
- Start-up time: < 8 s
- Minimum operating voltage: 10.5 V
- Multidrop current: 4 mA

Heartbeat Technology

Heartbeat Technology modules

Heartbeat Technology comprises 3 modules. These three modules combined check, evaluate and monitor device functionality and process conditions.

- Heartbeat Diagnostics
- Heartbeat Verification
- Heartbeat Monitoring

Power supply

Terminal assignment

Single compartment housing

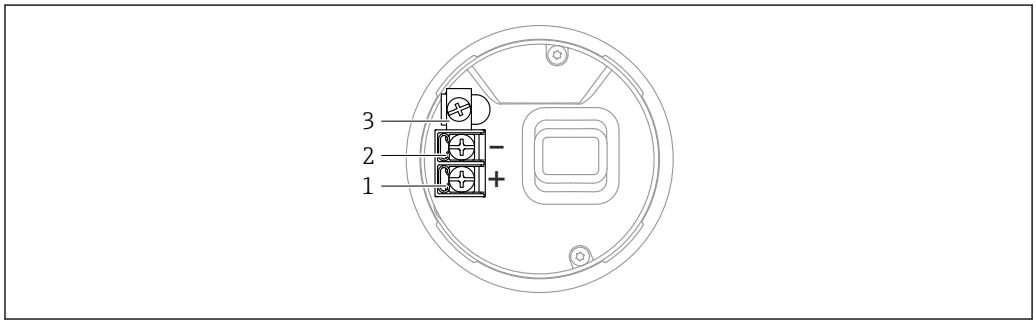

A0042594

2 Connection terminals and ground terminal in the connection compartment, single compartment housing

1 Positive terminal
2 Negative terminal
3 Internal ground terminal

Dual-compartment housing, L-form

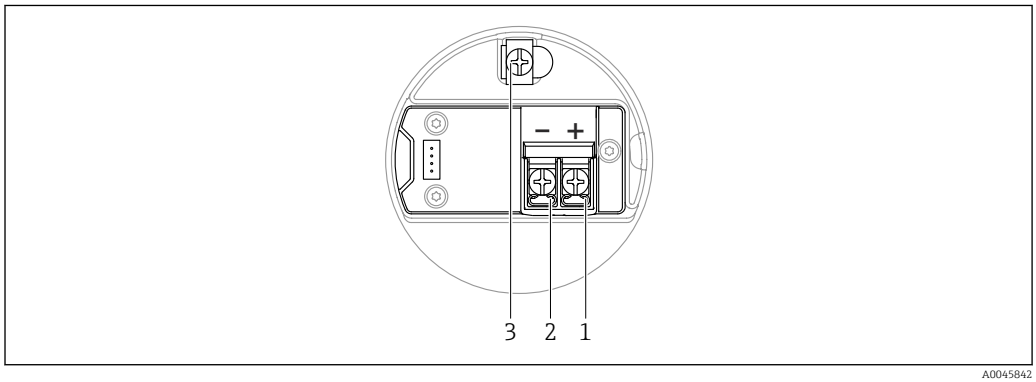

A0045842

3 Connection terminals and ground terminal in the connection compartment, dual-compartment housing, L-form

1 Plus terminal
2 Minus terminal
3 Internal ground terminal

Available device plugs

In the case of devices with a plug, it is not necessary to open the housing for connection purposes.

Various M12 sockets are available as accessories for devices with M12 plugs.

For more details, see the "Accessories" section.

M12 plug with pin assignment for HART

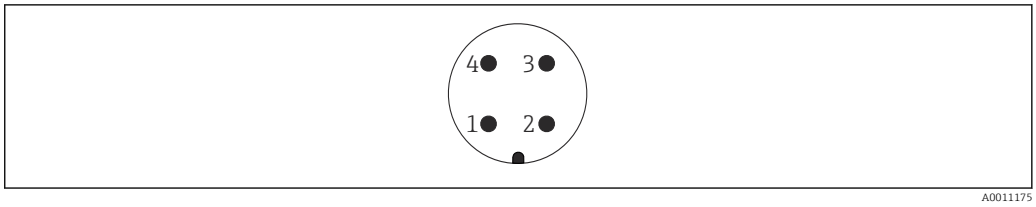

4 View of the connection on the device

1 Signal +
2 Not used
3 Signal –
4 Ground

M12 plug with pin assignment for PROFINET over Ethernet-APL

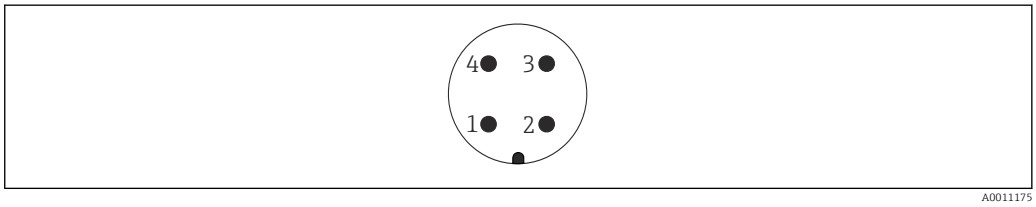

5 View of the connection on the device

1 APL signal -
2 Ethernet-APL signal +
3 Shielding
4 Not used

Supply voltage

HART

- U = DC 10.5 to 35 V (Ex d, Ex e, not Ex)
- U = DC 10.5 to 30 V (Ex i)
- Rated current: 4 to 20 mA HART

- The power unit must be tested to ensure it meets safety requirements (e.g. PELV, SELV, Class 2) and must comply with the relevant protocol specifications.
- Comply with the following according to IEC 61010-1: provide a suitable circuit breaker for the device.

Depending on the supply voltage at the moment the device is switched on, the backlight is switched off (supply voltage < 13 V).

PROFINET over Ethernet-APL

APL power class A (DC 9.6 to 15 V 540 mW)

The APL field switch must be tested to ensure it meets safety requirements (e.g., PELV, SELV, Class 2) and must comply with the relevant protocol specifications.

Electrical connection

Connection example

PROFINET over Ethernet-APL

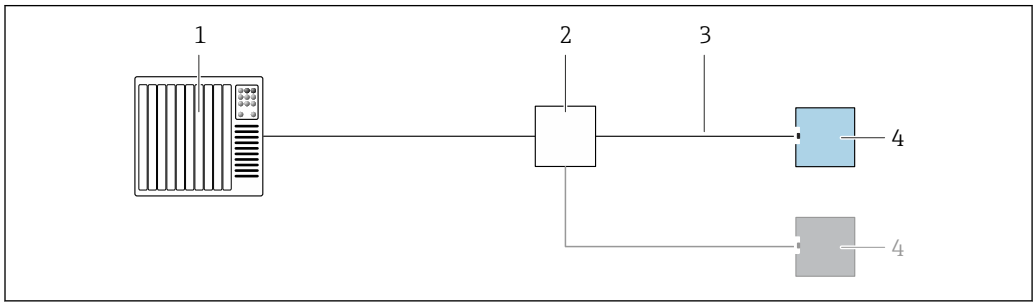

6 Connection example for PROFINET over Ethernet-APL

1 *Automation system*
2 *APL field switch*
3 *Observe cable specifications*
4 *Transmitter*

Potential equalization

WARNING

Ignitable sparks or excessively high surface temperatures.
Explosion hazard!
- Please refer to the separate documentation on applications in hazardous areas for the safety instructions.

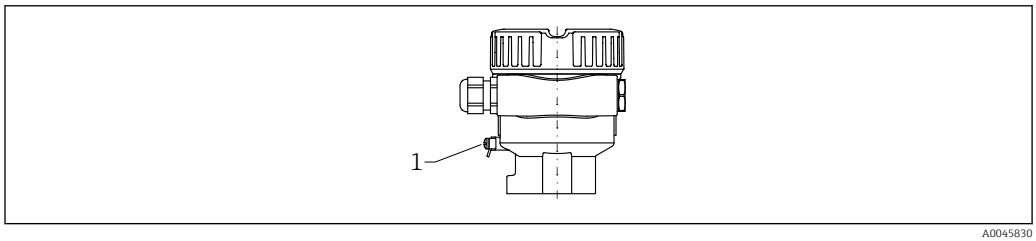

1 *Ground terminal for connecting the potential matching line (example)*

If necessary, the potential matching line can be connected to the external ground terminal of the transmitter before the device is connected.

For optimum electromagnetic compatibility:
- Potential matching line as short as possible
- Observe a cross-section of at least 2.5 mm^2 (14 AWG)

Terminals

- Supply voltage and internal ground terminal: 0.5 to 2.5 mm^2 (20 to 14 AWG)
- External ground terminal: 0.5 to 4 mm^2 (20 to 12 AWG)

Cable entries

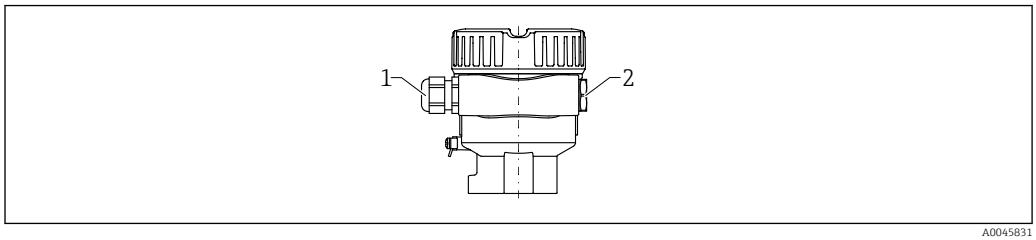

7 Example

1 *Cable entry*
2 *Blind plug*

The type of cable entry depends on the device version ordered.

Cable specification

The cable outer diameter depends on the cable entry used.
Cable outer diameter:
- Plastic gland: Ø5 to 10 mm (0.2 to 0.38 in)
- Nickel-plated brass gland: Ø7 to 10.5 mm (0.28 to 0.41 in)
- Stainless steel gland: Ø7 to 12 mm (0.28 to 0.47 in)

PROFINET over Ethernet-APL

Rated cross-section
Protective earth or grounding of the cable shield
> 1 mm^2 (17 AWG)

Reference cable type

The reference cable type for APL segments is fieldbus cable type A, MAU type 1 and 3 (specified in IEC 61158-2). This cable meets the requirements for intrinsically safe applications according to IEC TS 60079-47 and can also be used in non-intrinsically safe applications.

Cable type	A
Cable capacitance	45 to 200 nF/km
Loop resistance	15 to 150 Ω/km
Cable inductance	0.4 to 1 mH/km

Further details are provided in the Ethernet-APL Engineering Guideline (https://www.ethernet-apl.org).

Overvoltage protection

Devices without optional overvoltage protection

Equipment from Endress+Hauser fulfills the requirements of the product standard IEC 61326-1 (Table 2 Industrial Environment).

Depending on the type of connection (DC power supply, input line, output line) and in accordance with IEC 6132 6-1, different test levels are used to prevent transient overvoltages (IEC 61000-4-5 Surge): Test level for DC power supply lines and IO lines: 1 000-V-wire to ground

Devices with optional overvoltage protection

- Spark-over voltage: min. DC 400 V
- Tested in accordance with:
  - IEC 60079-14 Subsection 12.3
  - IEC 60060-1 Section 7
- Nominal discharge current: 10 kA

NOTICE

The device can be damaged by excessively high electrical voltages.
▶ Always ground the device with integrated overvoltage protection.

Overvoltage category

Overvoltage category II

Performance characteristics

Reference operating conditions

- As per IEC 62828-1
- Ambient temperature: +23 °C (+73 °F)
- Process temperature: +23 °C (+73 °F)
- Humidity φ = constant, in the range: 5 to 80 % rF ± 5 %
- Medium density (water): 1 g/cm^3 (62.4 lb/ft^3)
- Medium viscosity: 1 mPa·s
- Atmospheric pressure p_A = constant, in the range: 860 to 1 060 mbar (12.47 to 15.37 psi)
- Process pressure: Atmospheric pressure/unpressurized
- Sensor installation: Vertically and from above

- Density selection switch: > 0.7 g/cm³ (43.7 lb/ft³)
- Switch direction of sensor: Uncovered to covered
- Supply voltage: DC 24 V ±3 V

Take switch point into consideration

The following are typical switch points, depending on the orientation of the level switch and the coating.

Water +23 °C (+73 °F)

Minimum distance between the tuning fork and the tank wall or pipe wall: 10 mm (0.39 in)

Plastic-coated vibrating fork (ECTFE, PFA)

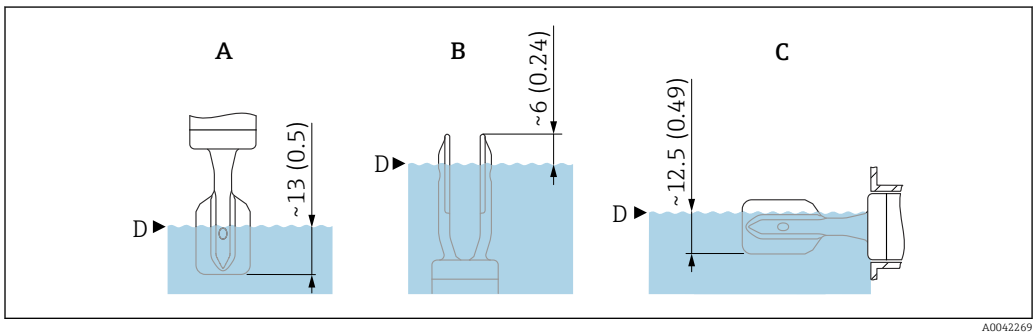

8 *Typical switch points, plastic-coated vibrating fork (ECTFE, PFA), dimensions without coating thickness. Unit of measurement mm (in)*

A Installation from above
B Installation from below
C Installation from the side
D Switch point

Enamel-coated vibrating fork

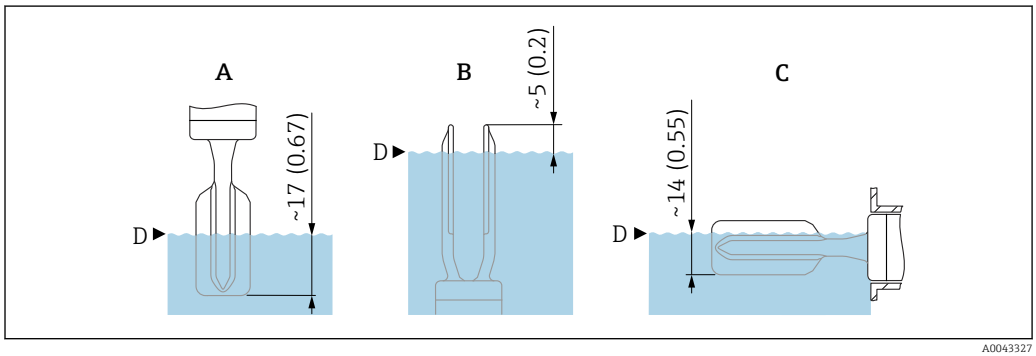

9 *Typical switch points, enamel-coated vibrating fork, dimensions without coating thickness. Unit of measurement mm (in)*

A Installation from above
B Installation from below
C Installation from the side
D Switch point

Coating material and layer thickness

ECTFE
- Lower limit: 0.5 mm (0.02 in)
- Upper limit: 1.6 mm (0.06 in)
- Maximum diameter: Ø 24.6 mm (0.97 in)

PFA (Edlon™), PFA (RubyRed®), PFA (conductive)
- Lower limit: 0.45 mm (0.02 in)
- Upper limit: 1.6 mm (0.06 in)
- Maximum diameter: Ø 24.6 mm (0.97 in)

Enamel
- Lower limit: 0.4 mm (0.02 in)
- Upper limit: 0.8 mm (0.03 in)
- Maximum diameter: Ø 23 mm (0.91 in)

Maximum measurement error

At reference operating conditions:
- Plastic coating: −0.2 to −1.2 mm (−0.008 to −0.05 in)
- Enamel coating: 0 to 0.9 mm (0 to 0.04 in)

Resolution

HART
Current output: < 1 µA

Response time

Dead time, time constant, settling time

Presentation of the dead time, time constant and settling time as per DIN EN 61298-2

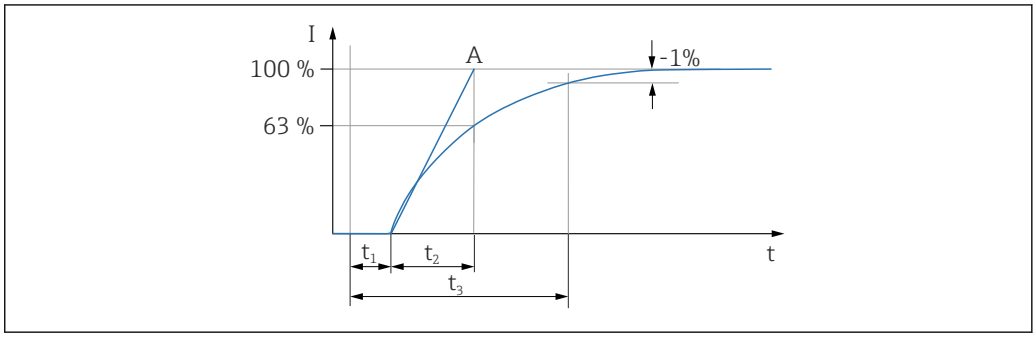

t_1 Dead time
t_2 Time constant
t_3 Settling time
A Stable full scale value

Dynamic behavior, current output

HART
- Dead time (t_1): 100 ms
- Time constant T63 (t_2): can be set from 0 to 999 s
- Settling time (t_3): minimum 250 ms

Dynamic behavior, digital output

HART
- Dead time (t_1):
  - Minimum: 200 ms
  - Maximum: 800 ms
- Time constant T63 (t_2): can be set from 0 to 999 s
- Settling time (t_3): minimum 200 ms

Reading cycle:
- Acyclic: maximum 3/s, typically 1/s (depending on command # and number of preambles)
- Cyclic (burst): maximum 3/s, typically 2/s

The device commands the burst mode function for cyclic value transmission via the HART communication protocol.

Cycle time (update time):
Cyclic (burst): at least 300 ms

PROFINET over Ethernet-APL
- Dead time (t_1):
  Maximum: 32 ms
- Time constant T63 (t_2): 0 s
- Settling time (t_3): 0 ms

Cycle time (update time): at least 32 ms

Hysteresis

At reference operating conditions:
- Plastic coating: 2.5 mm (0.1 in)
- Enamel coating: 3.5 mm (0.14 in)

Non-repeatability	0.5 mm (0.02 in)
Influence of the process temperature	Temperature range and switch point shift ▪ ECTFE: maximum −50 to +120 °C (−58 to +248 °F) Switch point shift in the range of 1 to 3.0 mm (0.04 to 0.12 in) ▪ PFA: maximum −50 to +150 °C (−58 to +302 °F) Switch point shift in the range of 1 to 3.0 mm (0.04 to 0.12 in) ▪ Enamel: maximum −50 to +150 °C (−58 to +302 °F) Switch point shift in the range of 1.05 to 2.0 mm (0.04 to 0.08 in)
Influence of the process pressure	Pressure range and switch point shift ▪ ECTFE, PFA: maximum 0 to 40 bar (0 to 580 psi) Switch point shift in the range of 0 to −2.0 mm (0 to −0.08 in) ▪ Enamel: maximum 0 to 25 bar (0 to 363 psi) Switch point shift in the range of 0 to −1.0 mm (0 to −0.04 in)
Influence of the density of the process medium (at room temperature and normal pressure)	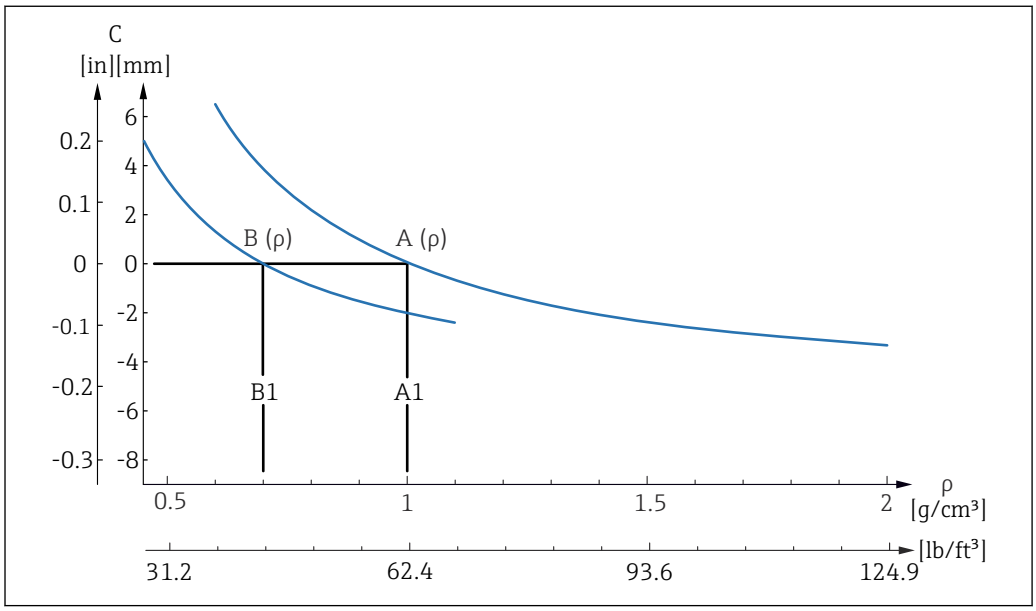

10 Reference switch points via density, plastic coating (ECTFE, PFA)

A Set density (ρ) > 0.7
A1 Reference condition ρ = 1.0 kg/m³
B Set density (ρ) > 0.5
B1 Reference condition ρ = 0.7 kg/m³
C Switch point deviation

Density setting
- TC_{typ}, [mm/10 k]
  - $\rho > 0.7$: −0.25
  - $\rho > 0.5$: −0.3
- $Pressure_{typ}$, [mm/10 bar]
  - $\rho > 0.7$: −0.3
  - $\rho > 0.5$: −0.4

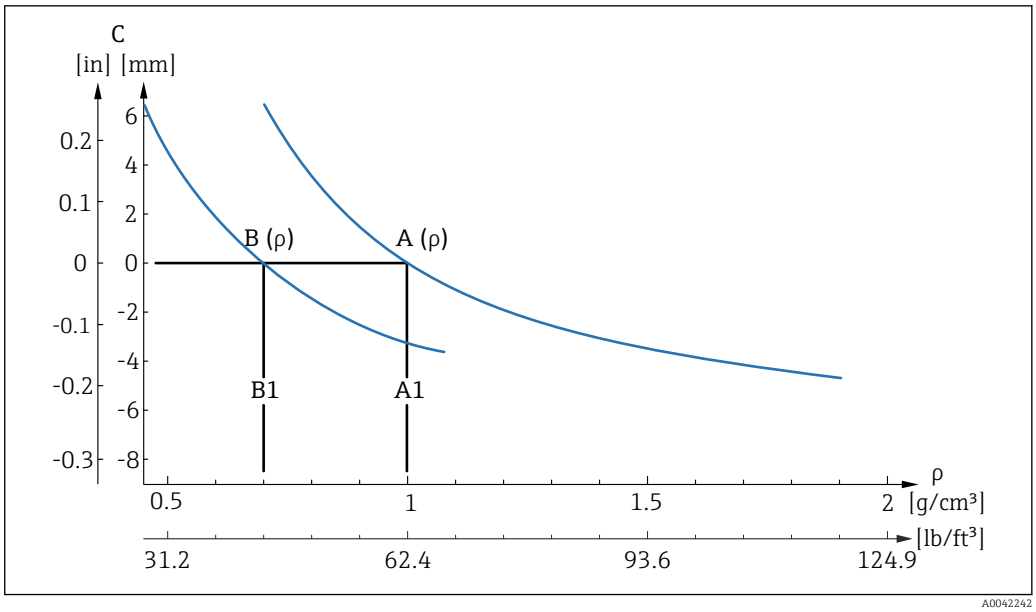

11 Reference switch points via density, enamel coating

A Set density (ρ) > 0.7
A1 Reference condition ρ = 1.0 kg/cm³
B Set density (ρ) > 0.5
B1 Reference condition ρ = 0.7 kg/cm³
C Switch point deviation

Density setting
- TC_{typ}, [mm/10 k]
  - $\rho > 0.7$: −0.1
  - $\rho > 0.5$: −0.15
- $Pressure_{typ}$, [mm/10 bar]
  - $\rho > 0.7$: −0.3
  - $\rho > 0.5$: −0.4

Installation

Mounting location, orientation

Mounting instructions
- Any orientation for version with a pipe length up to approx. 500 mm (19.7 in)
- Vertical orientation from above for device with long pipe
- Minimum distance between the vibrating fork and the tank wall or pipe wall: 10 mm (0.39 in)

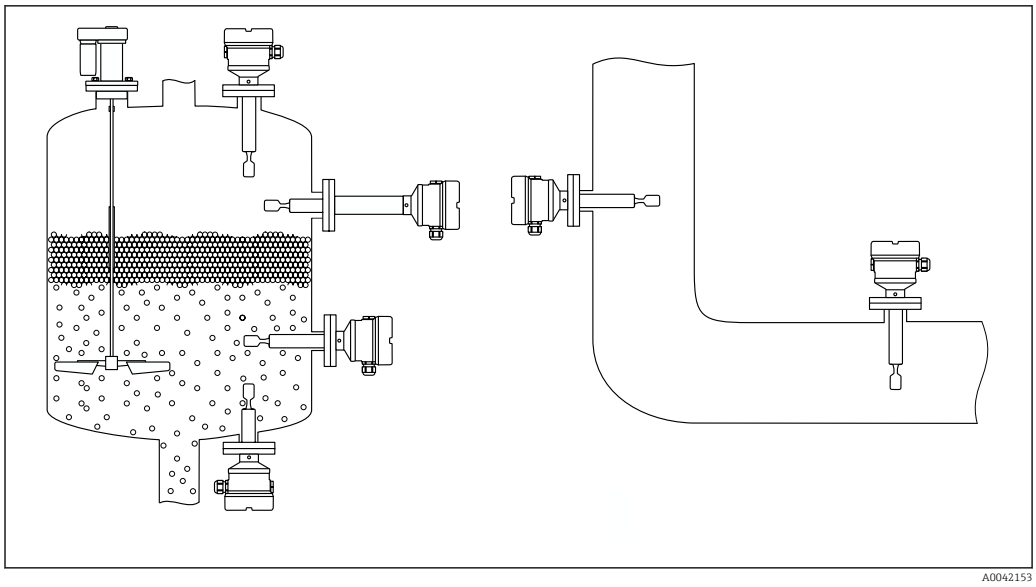

12 *Installation examples for a vessel, tank or pipe*

Installation instructions

Take viscosity into consideration

Viscosity values
- Low viscosity : < 2 000 mPa·s
- High viscosity: > 2 000 to 10 000 mPa·s

Low viscosity

Low viscosity, e.g. water: < 2 000 mPa·s

It is permitted to position the tuning fork within the installation socket.

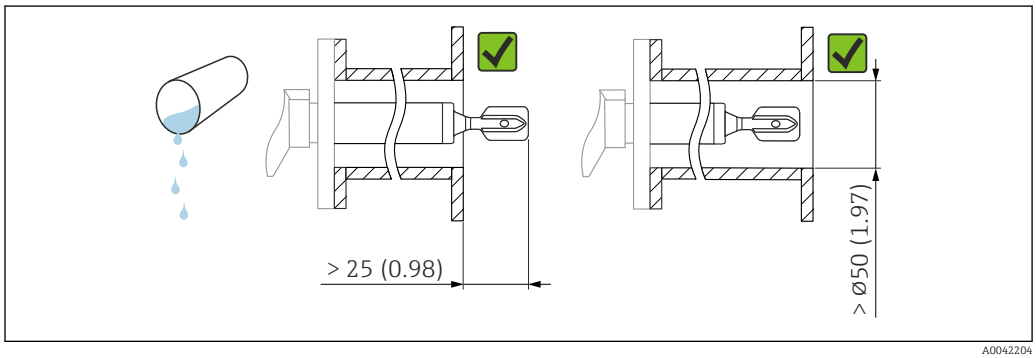

13 *Installation example for low-viscosity liquids. Unit of measurement mm (in)*

High viscosity

NOTICE

Highly viscous liquids may cause switching delays.
- ▶ Make sure that the liquid can run off the tuning fork easily.
- ▶ Deburr the socket surface.

High viscosity, e.g. viscous oils: ≤ 10 000 mPa·s

The tuning fork must be located outside the installation socket!

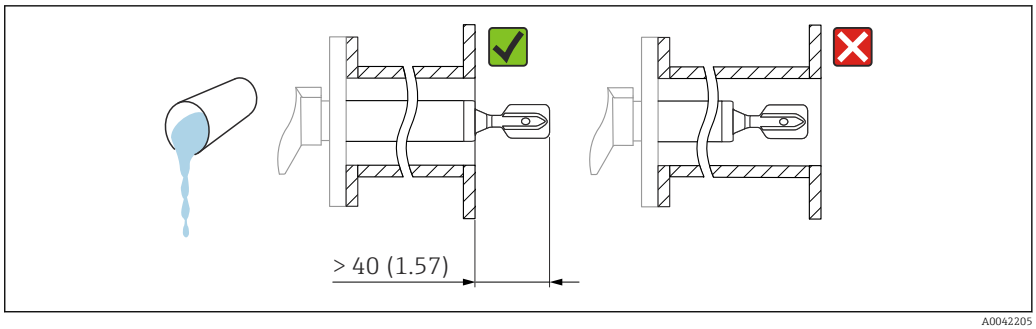

14 *Installation example for a highly viscous liquid. Unit of measurement mm (in)*

Avoid buildup

- Use short installation sockets to ensure that the tuning fork projects freely into the vessel
- Leave sufficient distance between the buildup expected on the tank wall and the tuning fork

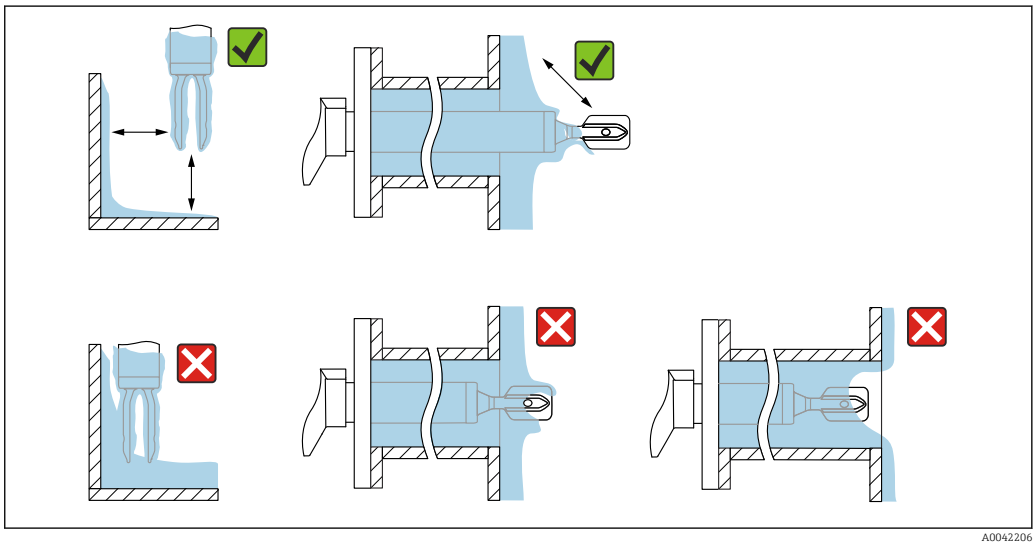

15 *Installation examples for a highly viscous process medium*

Take clearance into consideration

Allow sufficient space outside the tank for mounting, connection and settings involving the electronic insert.

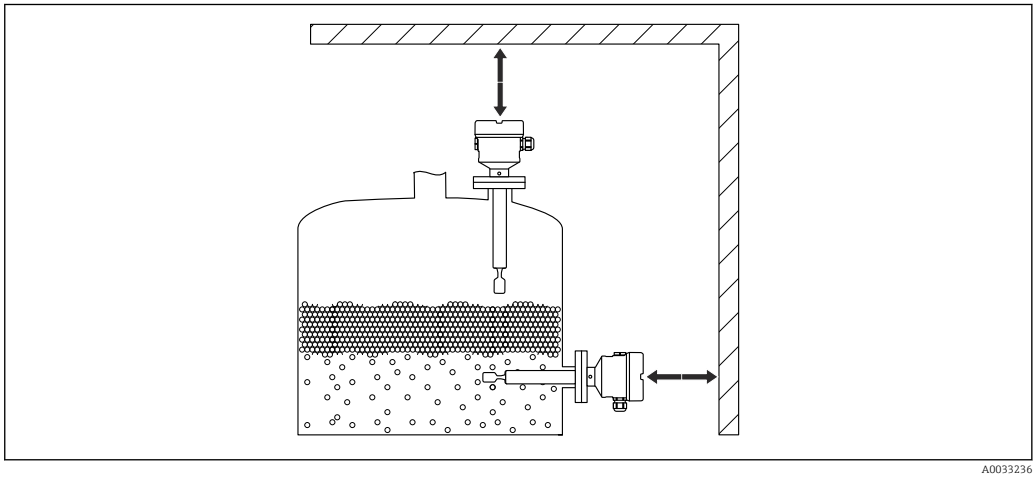

16 *Take clearance into consideration*

Aligning the tuning fork using the marking

The tuning fork can be aligned using the marking in such a way that the medium drains off easily and buildup is avoided.

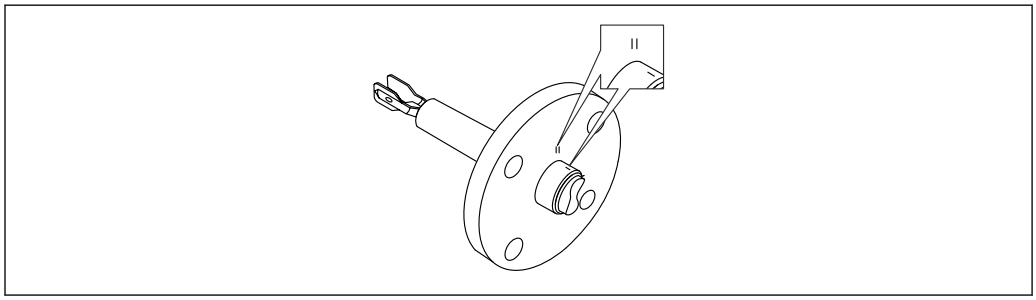

A0042207

17 *Position of the tuning fork when installed horizontally in the vessel using the marking*

Installing the device in piping

- Flow velocity up to 5 m/s with a viscosity of 1 mPa·s and density of 1 g/cm³ (62.4 lb/ft³) (SGU). Check for correct functioning in the event of other process medium conditions.
- The flow will not be significantly impeded if the tuning fork is correctly aligned and the marking is pointing in the direction of flow.
- The marking is visible when installed.

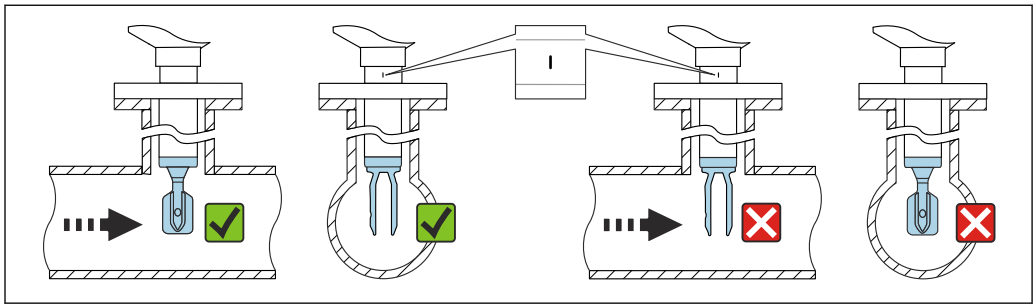

A0042208

18 *Installation in pipes (take fork position and marking into consideration)*

Aligning the cable entry

All housings can be aligned.

Housing without locking screw

The device housing can be rotated up to 350°.

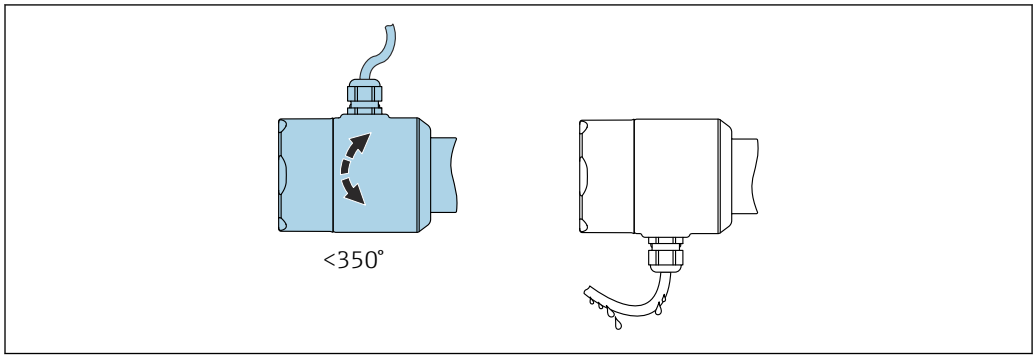

A0052359

19 *Housing without locking screw with drip loop*

Housing with locking screw

NOTICE

The locking screw is not sufficiently tightened when the device is delivered.
The housing may rotate and become loose due to vibration.
▶ Tighten the locking screw to 3.5 Nm (2.58 lbf ft).

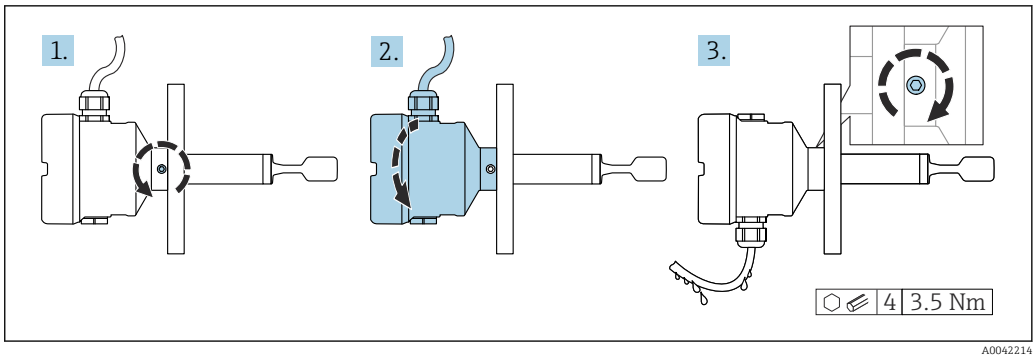

20 *Housing with external locking screw and drip loop*

Special installation instructions

Vessel with heat insulation

If process temperatures are high, the device should be incorporated in the usual vessel insulation system to prevent the electronics from heating as a result of thermal radiation or convection. The insulation in this case should not be higher than the neck of the device.

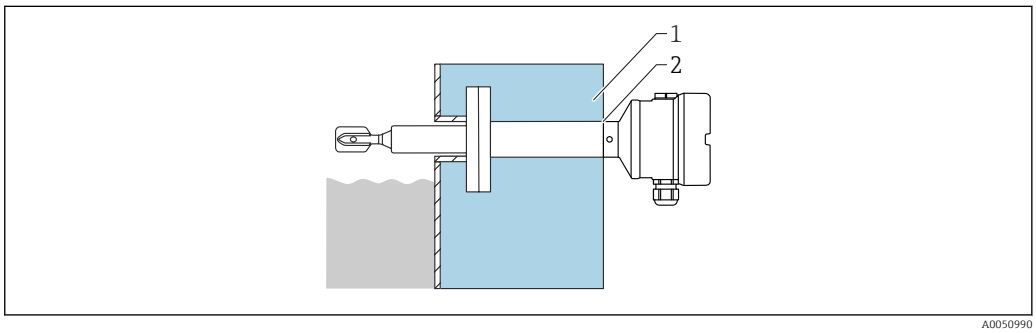

21 *Vessel with heat insulation (example with temperature spacer)*

1 *Vessel insulation*
2 *Insulation up to the housing neck max.*

Support the device

NOTICE

If the device is supported incorrectly, shocks and vibrations can damage the coated surface.

- Only use a support in conjunction with ECTFE or PFA plastic coating.
- Use suitable supports only.

Support the device in the event of severe dynamic load. Maximum lateral loading capacity of the pipe extensions and sensors: 75 Nm (55 lbf ft).

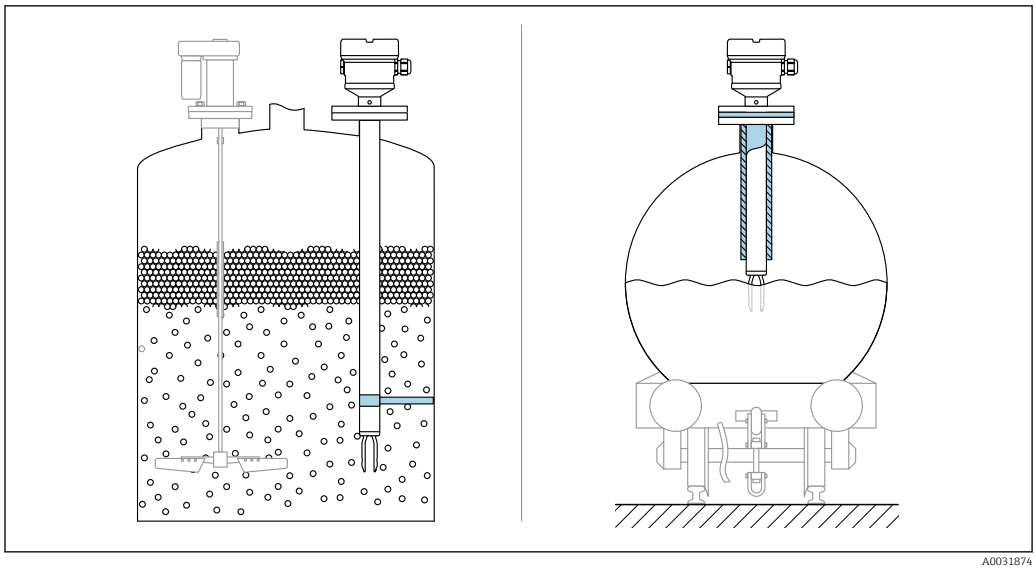

22 *Examples of support in the event of dynamic load*

Marine approval: In the case of pipe extensions or sensors longer than 1 600 mm (63 in), a support is needed at least every 1 600 mm (63 in).

Environment

Ambient temperature range

The following values apply up to a process temperature of +90 °C (+194 °F). At higher process temperatures, the permitted ambient temperature is reduced (see diagram).
- Without LCD display: −40 to +70 °C (−40 to +158 °F)
- With LCD display: −40 to +70 °C (−40 to +158 °F) with limitations in optical properties, such as display speed and contrast
  Can be used without limitations: −20 to +60 °C (−4 to +140 °F)

Optionally available in combination with HART:
- −50 °C (−58 °F) with restricted operating life and performance
- −60 °C (−76 °F) with restricted operating life and performance,
  Below −50 °C (−58 °F): devices can be permanently damaged

The following ambient temperature applies over the entire process temperature range for devices with a temperature spacer: +70 °C (+158 °F)

Outdoor operation in strong sunlight:
- Mount the device in a shaded location
- Avoid direct sunlight, particularly in warmer climatic regions
- Use a protective cover, can be ordered as an accessory

Single compartment housing (plastic)

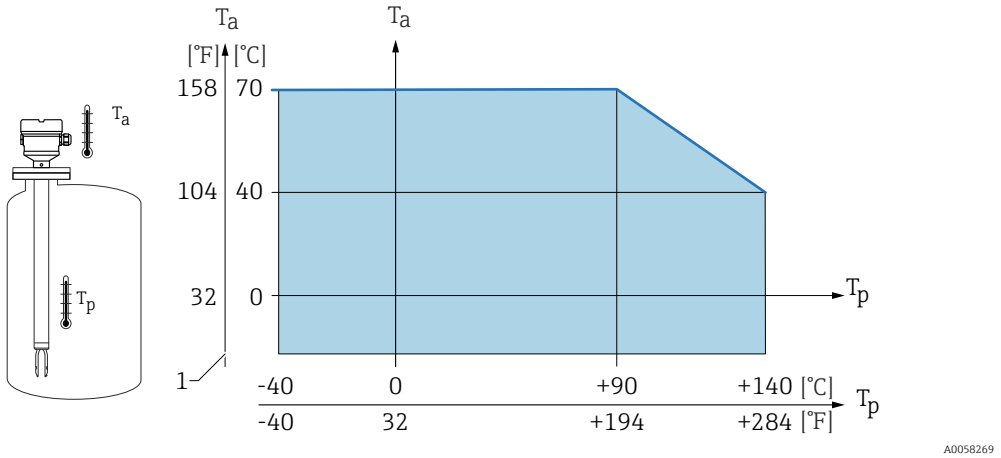

23 Permitted ambient temperature T_a at the housing as a function of the process temperature T_p in the vessel

1 Europe: −20 °C (−4 °F)
CSA GP: 0 °C (32 °F) indoor use

Single compartment housing (aluminum, coated) and dual compartment housing (aluminum, coated and 316 L)

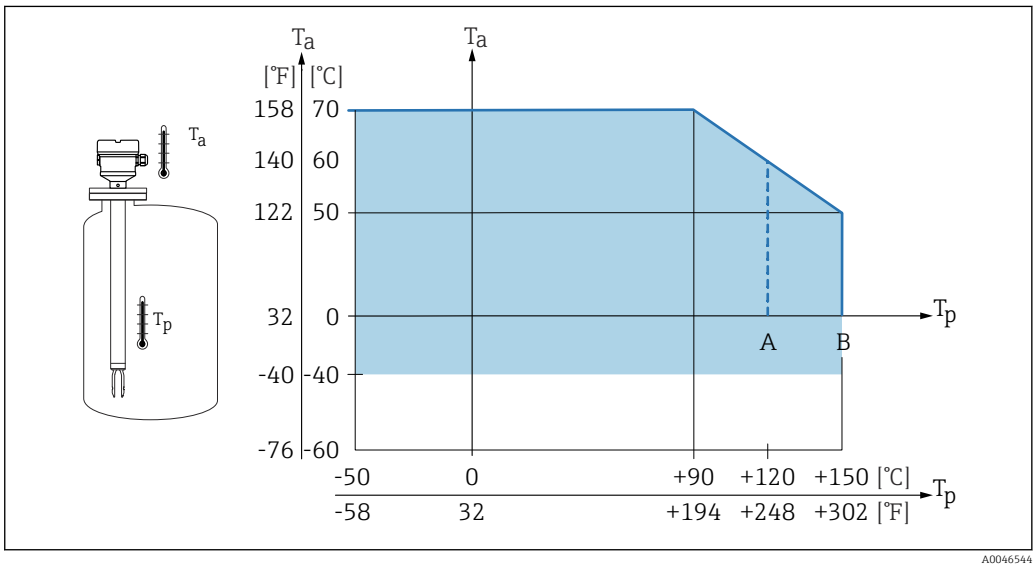

24 Permitted ambient temperature T_a at the housing as a function of the process temperature T_p in the vessel

A ECTFE-coated
B PFA- or enamel-coated

Single compartment housing (316 L, hygiene)

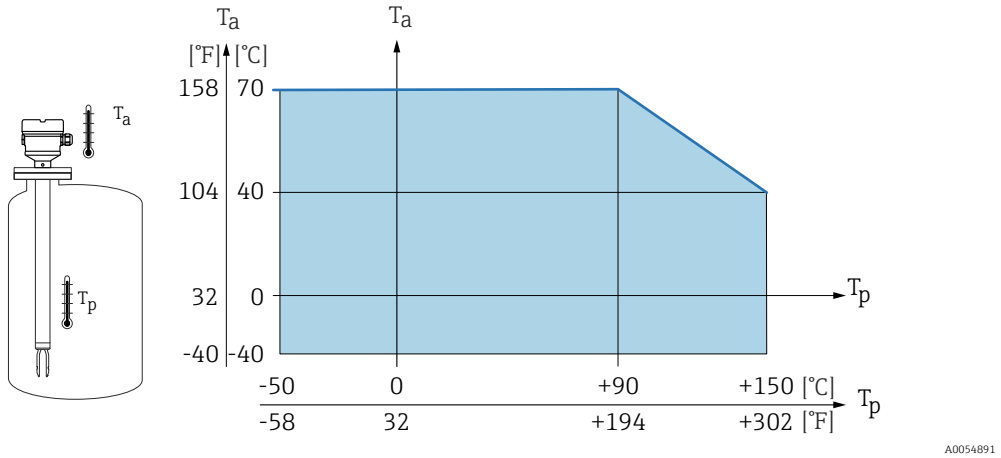

25 *Permitted ambient temperature T_a at the housing as a function of the process temperature T_p in the vessel*

Hazardous area

In the hazardous area, the permitted ambient temperature can be limited depending on the zones and gas groups. Pay attention to the information in the Ex documentation (XA).

Storage temperature	−40 to +80 °C (−40 to +176 °F) Optionally in combination with HART: −50 °C (−58 °F) or −60 °C (−76 °F)
Humidity	Operation up to 100 %. Do not open in a condensing atmosphere.
Operating height	Up to 5 000 m (16 404 ft) above sea level.
Climate class	As per IEC 60068-2-38 test Z/AD
Degree of protection	Testing according to IEC 60529 and NEMA 250 IP68 test condition: 1.83 m H_2O for 24 h **Housing** See cable entries **Cable entries** ▪ M20 coupling, plastic, IP66/68 NEMA Type 4X/6P ▪ M20 coupling, nickel-plated brass, IP66/68 NEMA Type 4X/6P ▪ M20 coupling, 316L, IP66/68 NEMA Type 4X/6P ▪ M20 thread, IP66/68 NEMA Type 4X/6P ▪ G ½ thread, NPT ½ , IP66/68 NEMA Type 4X/6P Degree of protection for M12 plug ▪ When housing is closed and connecting cable is plugged in: IP66/67 NEMA Type 4X ▪ When housing is open or connecting cable is not plugged in: IP20, NEMA Type 1 NOTICE **M12 plug: Loss of IP protection class due to incorrect installation!** ▶ The degree of protection only applies if the connecting cable used is plugged in and screwed tight. ▶ The degree of protection only applies if the connecting cable used is specified according to IP67 NEMA Type 4X. If the "M12 plug" option is selected as the electrical connection, **IP66/67 NEMA Type 4X** applies for all housing types.
Vibration resistance	As per IEC60068-2-64-2008 a(RMS) = 50 m/s², f = 5 to 2 000 Hz, t = 3 axes x 2 h

Shock resistance

As per IEC 60068-2-27-2008: 300 m/s² [= 30 g_n] + 18 ms

g_n: standard acceleration of gravity

Mechanical load

Support the device in the event of severe dynamic load. Maximum lateral loading capacity of the pipe extensions and sensors: 75 Nm (55 lbf ft).

For more details, see the "Supporting the device" section.

Pollution degree

Pollution level 2

Electromagnetic compatibility (EMC)

- Electromagnetic compatibility according to EN 61326 series. Interference immunity according to Table 2 (Industrial), interference radiation according to Group 1 Class B
- Electromagnetic compatibility as per NAMUR recommendation EMC NE21
- Maximum deviation during EMC testing: < 0.5 % of span
- Fulfills the requirements of functional safety (SIL) in accordance with EN 61326-3-1 (with FEL60H electronic insert)

For more details, refer to the EU Declaration of Conformity.

Process

Process temperature range

- ECTFE: −50 to +120 °C (−58 to +248 °F)
- PFA: −50 to +150 °C (−58 to +302 °F)
- Enamel:−50 to +150 °C (−58 to +302 °F)

Pay attention to the pressure and temperature dependency. "Process pressure range" section.

Thermal shock

≤ 120 K/s

Process pressure range

The maximum pressure for the device depends on the lowest-rated element with regard to pressure.

Components are: process connection, optional mounting parts, or accessories.

WARNING

Incorrect design or use of the device may lead to bursting parts!

This may result in severe, possibly irreversible injury to persons and environmental hazards.

- ▶ Only operate the device within the specified limits for the components!
- ▶ MWP (maximum working pressure): The maximum working pressure is specified on the nameplate. This value refers to a reference temperature of 20 °C (68 °F) and may be present at the device for an unlimited time. Note temperature dependency of MWP. For higher temperatures, refer to the following standards for the permitted pressure values for flanges:EN 1092-1 (materials 1.4435 and 1.4404 are identical with regard to their stability/temperature property and are grouped together in under 13E0 in EN 1092-1 Tab. 18. The chemical composition of the two materials can be identical), ASME B 16.5a, JIS B 2220 (the latest version of the standard applies in each case).
- ▶ The Pressure Equipment Directive (2014/68/EU) uses the abbreviation "PS". The abbreviation "PS" corresponds to the maximum working pressure (MWP) of the device
- ▶ MWP data that deviate from this is provided in the relevant sections of the Technical Information.

Refer to the following standards for the permitted pressure values of the flanges at higher temperatures:

- pR EN 1092-1: With regard to its stability-temperature property, the material 1.4435 is identical to 1.4404, which is classed as 13E0 in EN 1092-1 Tab. 18. The chemical composition of the two materials can be identical.
- ASME B 16.5
- JIS B 2220

The following data apply over the entire temperature range. Pay attention to exceptions for flange process connections!

- ECTFE, PFA: −1 to 40 bar (−14.5 to 580 psi)
- Enamel: max. −1 to 25 bar (−14.5 to 363 psi)

In each case, the lowest value from the derating curves of the device and the selected flange applies.

Canadian CRN approval: more details about the maximum pressure values are available in the download area of the product page under: www.endress.com→ Downloads.

Overpressure limit

- Overpressure limit = 1.5 · PN
  - ECTFE, PFA: PN = 40 bar (580 psi)
  - Enamel: PN = 25 bar (362.5 psi)
- Membrane burst pressure at 200 bar (2 900 psi)

The device function is limited during the pressure test.

Mechanical integrity is guaranteed up to 1.5 times the process nominal pressure PN.

Medium density

Liquids with density > 0.7 g/cm³ (43.7 lb/ft³)
Setting > 0.7 g/cm³ (43.7 lb/ft³), as supplied to the customer

Liquids with density > 0.5 g/cm³ (31.2 lb/ft³)
Setting > 0.5 g/cm³ (31.2 lb/ft³), can be ordered as preset value or configurable

Liquids with density > 0.4 g/cm³ (25.0 lb/ft³)
- Setting > 0.4 g/cm³ (25.0 lb/ft³), can be ordered as preset value or configurable
- Functional safety (SIL) for defined media and process parameters on request (only in combination with HART)

Viscosity

≤ 10 000 mPa·s

Pressure tightness

Up to vacuum

In vacuum evaporation plants, select the 0.4 g/cm³ (25.0 lb/ft³)/ density setting.

Solids contents

Ø ≤ 5 mm (0.2 in)

Mechanical construction

Design, dimensions

Device height

The device height consists of the following components:
- Housing including cover
- Temperature spacer and/or pressure-tight feedthrough (second line of defense), optional
- Pipe extension or short pipe version, optional
- Process connection

The individual heights of the components can be found in the following sections:
- Determine the height of the device and add the individual heights
- Take the installation clearance into consideration (space that is needed to install the device)

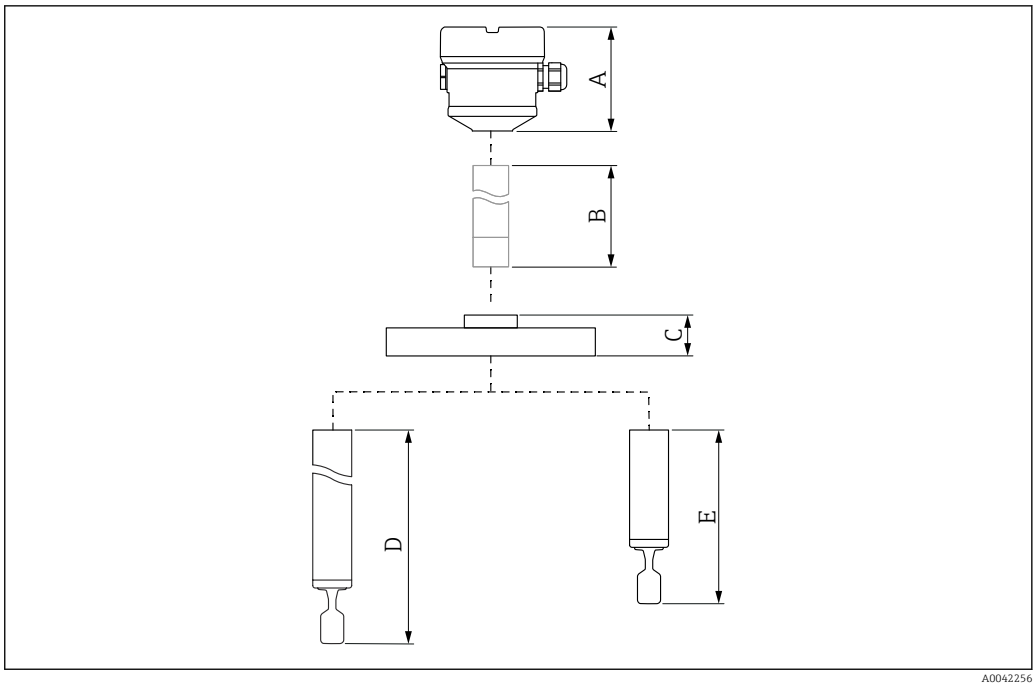

26 Components for determining the height of the device

A Housing including cover
B Temperature spacer, pressure-tight feedthrough (optional), details in the Product Configurator
C Process connection
D Probe design: pipe extension with vibrating fork
E Probe design: short pipe version with vibrating fork

Dimensions

The following dimensions are rounded values. As a result, there may be deviations from the specifications in the Product Configurator at www.endress.com.

To view CAD data:

1. Enter www.endress.com in your web browser
2. Search for the device
3. Select the **Configuration** button
4. Configure the device
5. Select the **CAD drawings** button

Housing and cover

All housings can be aligned. The housing alignment can be fixed on housings with a locking screw.

Single compartment housing, plastic

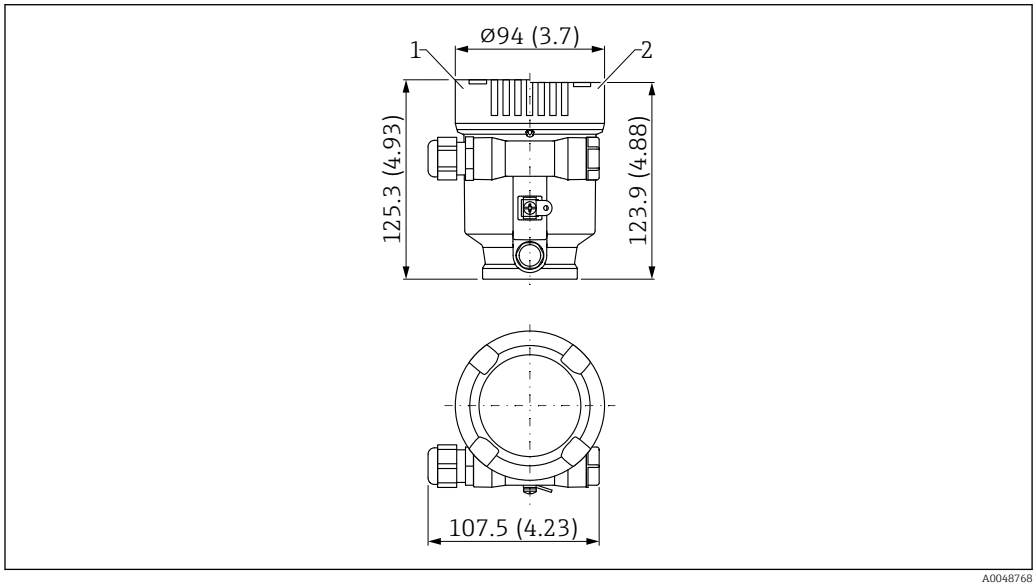

27 Dimensions; single compartment housing, plastic; incl. M20 coupling and plug, plastic. Unit of measurement mm (in)

1 Height with cover including sight glass made of plastic
2 Height with cover without sight glass

Single-compartment housing, aluminum, coated

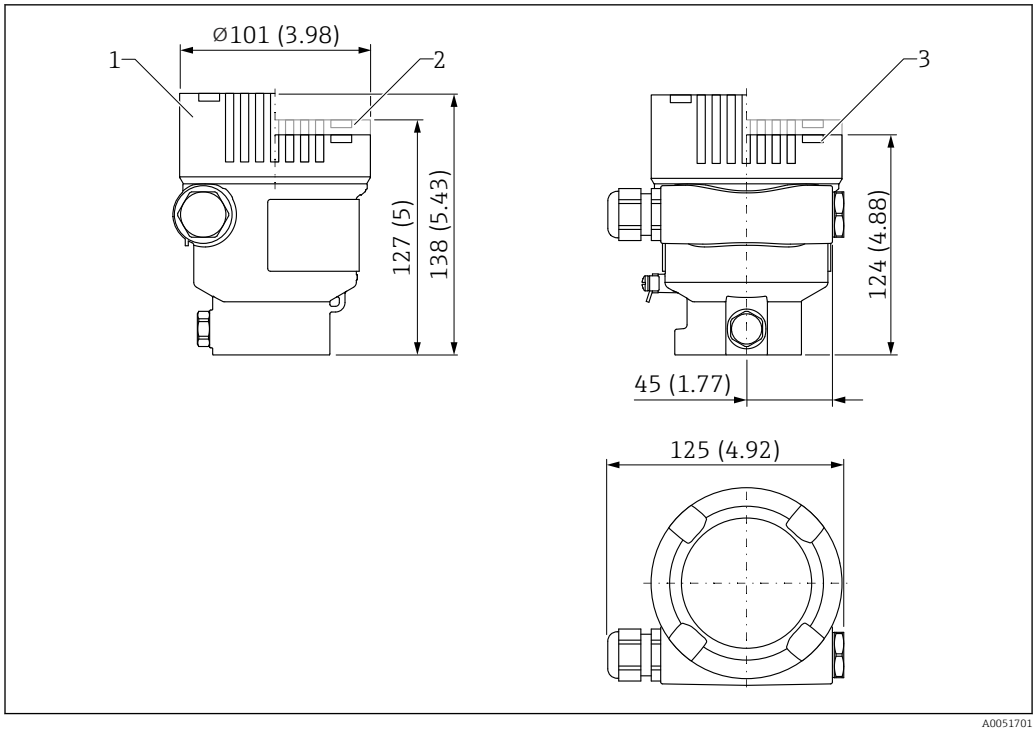

28 Dimensions of single-compartment housing, aluminum, coated. Unit of measurement mm (in)

1 Height with cover comprising glass sight glass (devices for Ex d/XP, dust Ex)
2 Height with cover including sight glass made of plastic
3 Height with cover without sight glass

Single compartment housing, 316L, hygiene

For use in hazardous areas with a certain type of protection, the ground terminal on the outside of the housing is required.

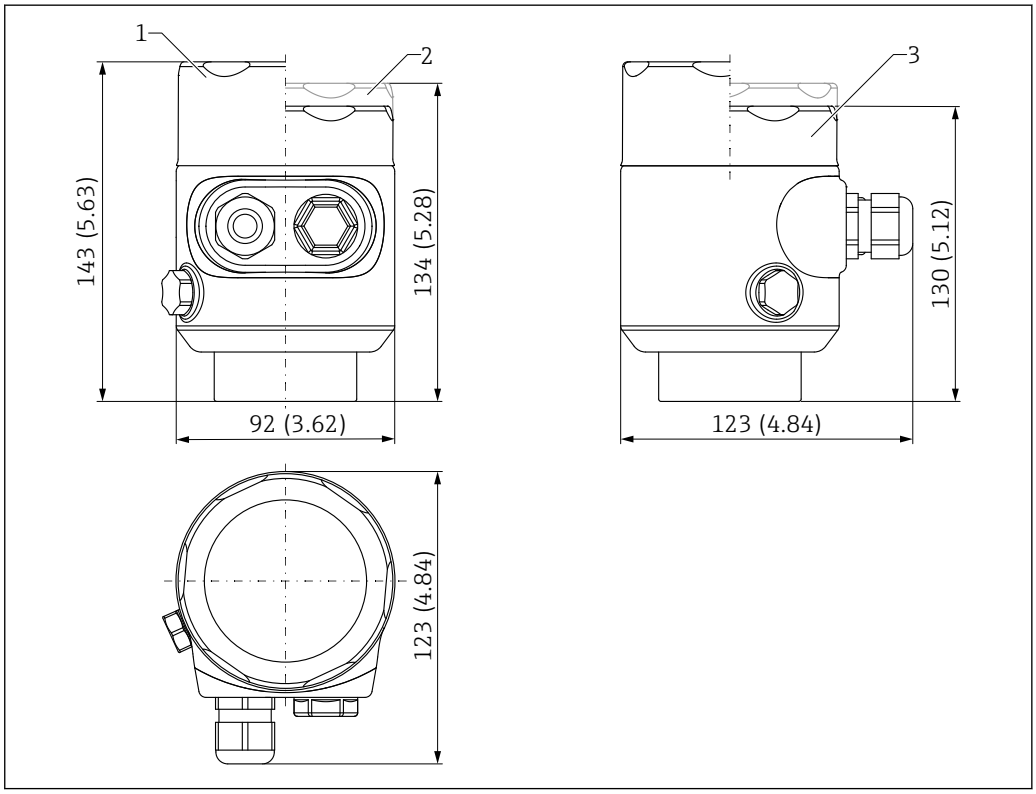

29 *Dimensions of single compartment housing, 316 L, hygienic. Unit of measurement mm (in)*

1 *Height with cover comprising glass sight glass*
2 *Height with cover comprising plastic sight glass*
3 *Height with cover without sight glass*

Dual-compartment housing, L-shaped, aluminum, coated

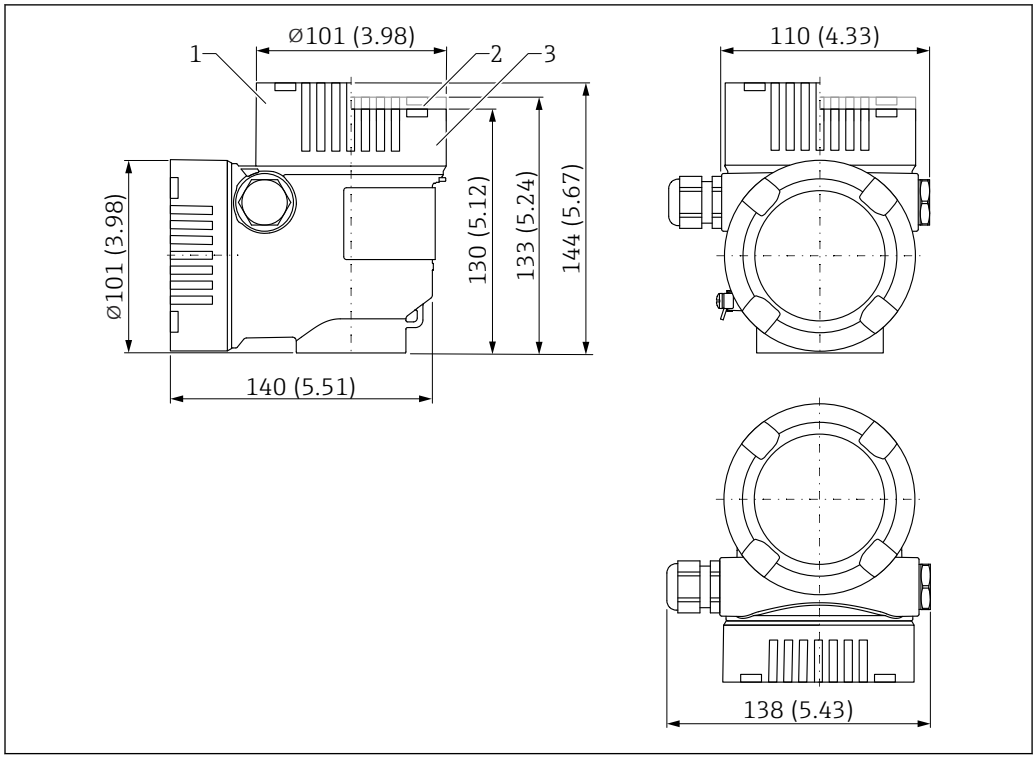

30 Dimensions; dual compartment housing L-shaped, aluminum, coated; incl. M20 coupling and plug, plastic. Unit of measurement mm (in)

1 Height with cover comprising glass sight glass (devices for Ex d/XP, dust Ex)
2 Height with cover including sight glass made of plastic
3 Cover without sight glass

Dual compartment housing, L-shaped, 316L

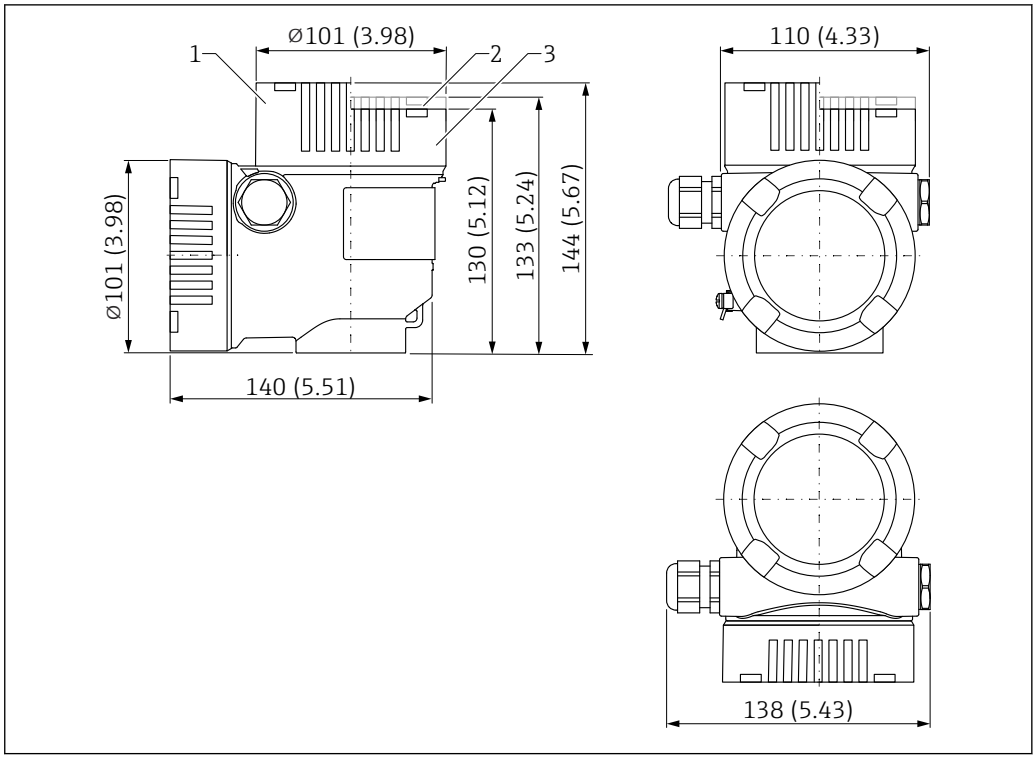

31 Dimensions; dual compartment housing L-shaped, 316L; incl. M20 coupling and plug, plastic. Unit of measurement mm (in)

1 Height with cover comprising glass sight glass (devices for Ex d/XP, dust Ex)
2 Height with cover including sight glass made of plastic
3 Cover without sight glass

Temperature spacer, pressure-tight feedthrough (optional)

Provides sealed insulation for the vessel and a normal ambient temperature for the housing.

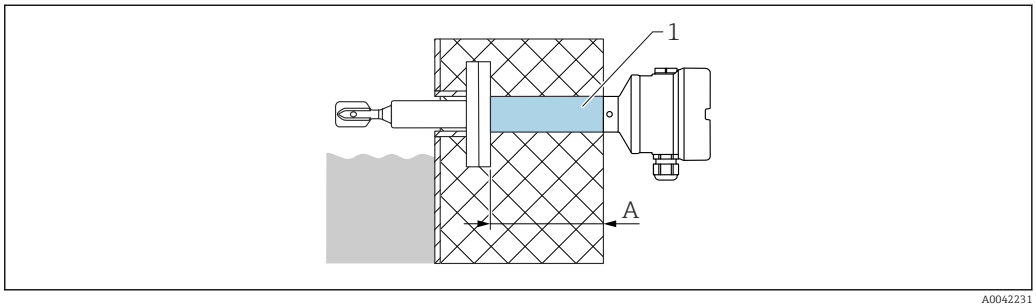

Unit of measurement mm (in)

1 Temperature spacer, pressure-tight feedthrough with maximum insulation length
A Approx. 140 mm (5.51 in)

Dimension A depends on the process connection selected and can therefore vary. For exact dimensions, information is available from the Endress+Hauser sales office.

Product Configurator, feature "Sensor design":
- Temperature spacer
- Pressure-tight feedthrough (second line of defense)
  If the sensor is damaged, this protects the housing from vessel pressures up to 100 bar (1 450 psi).

Both versions cannot be ordered in combination with Ex d approval.

The "Pressure-tight feedthrough" version can only be selected in conjunction with the "Temperature spacer" option.

Ex d glass feedthrough for pipe extensions

If a pipe extension is required in combination with an Ex d approval, the following design is used:

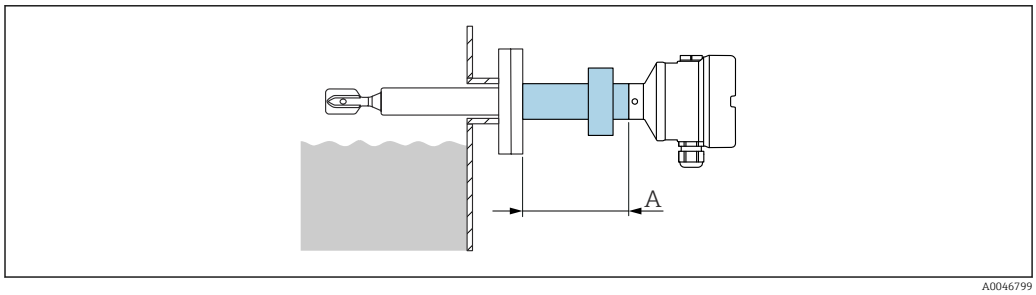

32 Ex d glass feedthrough for pipe extensions. Unit of measurement mm (in)

A Approx. 76 mm (2.99 in)

Dimension A depends on the process connection selected and can therefore vary. For exact dimensions, information is available from the Endress+Hauser sales office.

Probe design

Short pipe
Fixed length (A)
- Base material: 316L
- Sensor length: approx. 115 mm (4.53 in)
- Flanges according to DIN/EN, ASME, JIS from DN 40 / 1½"
  Radius (R) ≤ 4 mm (0.16 in) for DN25/ASME flanges

Pipe extension
Variable length L (B)
- Base material: 316L
- Sensor length depends on enamel coating: 148 to 1 200 mm (5.83 to 47.2 in)
- Sensor length depends on plastic coating: 148 to 3 000 mm (5.83 to 118 in)
- Length tolerances L: < 1 m (3.3 ft) = −5 mm (−0.2 in), 1 to 3 m (3.3 to 9.8 ft) = (−10 mm (−0.39 in)

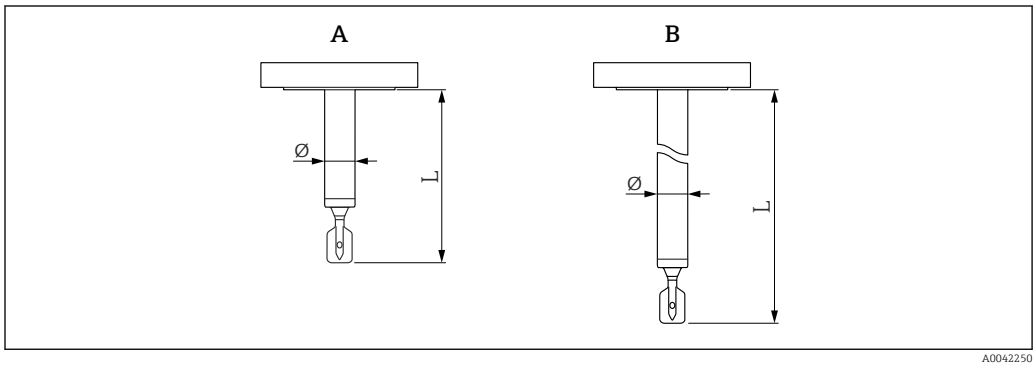

33 Probe design: short pipe, pipe extension

A Short pipe: fixed length
B Pipe extension: variable length L
L Sensor length
Ø Maximum diameter: depends on coating material

Tuning fork

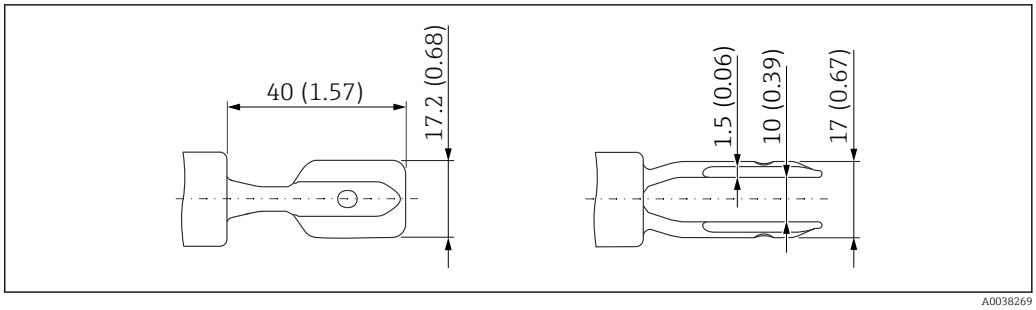

34 *Tuning fork with plastic coating (ECTFE, PFA). Unit of measurement mm (in)*

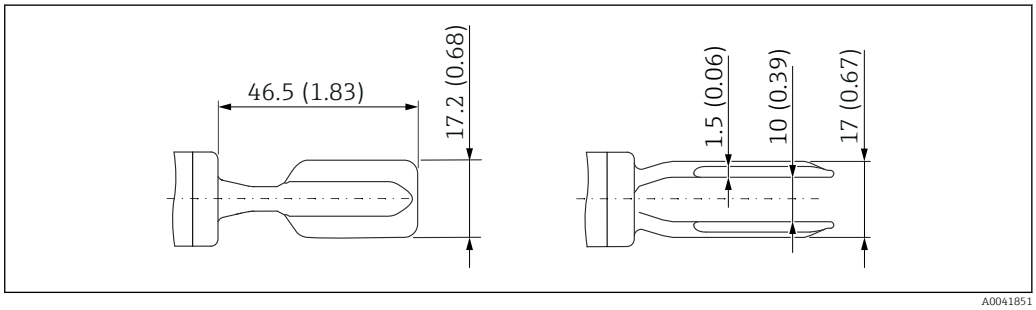

35 *Tuning fork with enamel coating. Unit of measurement mm (in)*

Process connections

Process connection, sealing surface

- Flange ASME B16.5, RF (Raised Face)
- Flange EN1092-1, Form A
- Flange EN1092-1, Form B1
- Flange JIS B2220, RF (Raised Face)

Height of process connection

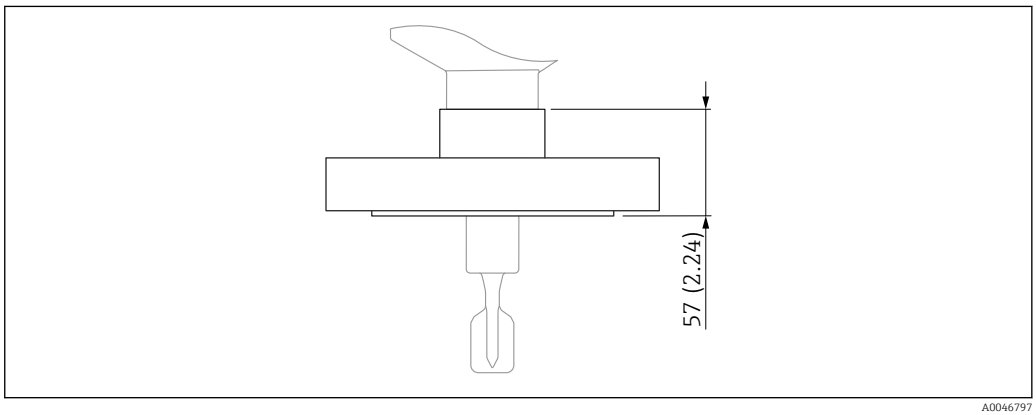

36 *Process connection with flange (maximum specification of height) . Unit of measurement mm (in)*

ASME B16.5 flanges, RF

Pressure rating	Type	Material	Weight
Cl.150	NPS 1"	316/316L	1.0 kg (2.21 lb)
Cl.150	NPS 1-½"	316/316L	1.5 kg (3.31 lb)
Cl.150	NPS 2"	316/316L	2.4 kg (5.29 lb)

Pressure rating	Type	Material	Weight
Cl.150	NPS 2"	Enamel 1.0487	2.4 kg (5.29 lb)
Cl.150	NPS 3"	316/316L	4.9 kg (10.8 lb)
Cl.150	NPS 4"	316/316L	7 kg (15.44 lb)
Cl.300	NPS 2"	316/316L	3.2 kg (7.06 lb)
Cl.300	NPS 2"	Enamel 1.0487	3.2 kg (7.06 lb)

EN flanges EN 1092-1, A

Pressure rating	Type	Material	Weight
PN6	DN50	316L (1.4404)	1.6 kg (3.53 lb)
PN10/16	DN100	316L (1.4404)	5.6 kg (12.35 lb)
PN25/40	DN25	316L (1.4404)	1.3 kg (2.87 lb)
PN25/40	DN32	316L (1.4404)	2.0 kg (4.41 lb)
PN25/40	DN40	316L (1.4404)	2.4 kg (5.29 lb)
PN25/40	DN50	316L (1.4404)	3.2 kg (7.06 lb)
PN25/40	DN50	Enamel 1.0487	3.2 kg (7.06 lb)
PN25/40	DN80	316L (1.4404)	5.9 kg (13.01 lb)
PN25/40	DN80	Enamel 1.0487	5.9 kg (13.01 lb)

EN flanges EN 1092-1, B1

Pressure rating	Type	Material	Weight
PN6	DN50	316L (1.4404)	1.6 kg (3.53 lb)
PN10/16	DN100	316L (1.4404)	5.6 kg (12.35 lb)
PN25/40	DN25	316L (1.4404)	1.3 kg (2.87 lb)
PN25/40	DN32	316L (1.4404)	2.0 kg (4.41 lb)
PN25/40	DN40	316L (1.4404)	2.4 kg (5.29 lb)
PN25/40	DN50	316L (1.4404)	3.2 kg (7.06 lb)
PN25/40	DN50	Enamel 1.0487	3.2 kg (7.06 lb)
PN25/40	DN80	316L (1.4404)	5.9 kg (13.01 lb)
PN25/40	DN80	Enamel 1.0487	5.9 kg (13.01 lb)

JIS flanges B2220 (RF)

Pressure rating	Type	Material	Weight
10K	10K 50A	316L (1.4404)	1.7 kg (3.75 lb)
10K	10K 125A	316L (1.4404)	7.3 kg (16.10 lb)

Coating material and layer thickness

The maximum diameter Ø depends on the coating material.

ECTFE
- Lower limit: 0.5 mm (0.02 in)
- Upper limit: 1.6 mm (0.06 in)
- Maximum diameter: Ø 24.6 mm (0.97 in)

PFA (Edlon™), PFA (RubyRed®), PFA (conductive)
- Lower limit: 0.45 mm (0.02 in)
- Upper limit: 1.6 mm (0.06 in)
- Maximum diameter: Ø 24.6 mm (0.97 in)

PFA (Edlon™): FDA-compliant material in accordance with 21 CFR Part 177.1550/2600

Enamel
- Lower limit: 0.4 mm (0.02 in)
- Upper limit: 0.8 mm (0.03 in)
- Maximum diameter: Ø 23 mm (0.91 in)

Properties and benefits of coatings

ECTFE (ethylene chlorotrifluoroethylene)
- Thermoplastic fluoropolymer coating
- Also known as HALAR®
- Very good chemical and corrosion resistance
- High abrasion performance
- Good non-stick properties
- Ideal for use in the chemicals industry

PFA (perfluoroalkoxy)
- Properties similar to PTFE (polytetrafluoroethylene) and FEP (perfluoroethylenepropylene)
- Also known as Teflon®-PFA
- Very good chemical and corrosion resistance
- High abrasion performance
- Good non-stick and sliding properties
- High temperature stability
- Ideal for use in the chemical and pharmaceutical industry
- Available as PFA (Edlon™), PFA (Ruby Red®) or also as PFA (conductive), specially developed for use in explosive atmospheres

PFA (Edlon™): FDA-compliant material in accordance with 21 CFR Part 177.1550/2600

Enamel
- Glass-like material
- Very good chemical and corrosion resistance
- Acid-resistant
- High temperature stability
- Dirt-repellent
- Low resistance to impact

Use of the selected coating material influences the approved IIB/IIC gas groups. Pay attention to the information in the safety documentation (XA).

Weight

Housing
Weight including electronics and display (graphic display):

Single compartment housing
- Plastic: 0.5 kg (1.10 lb)
- Aluminum, coated: 1.2 kg (2.65 lb)
- 316L, hygienic: 1.2 kg (2.65 lb)

Dual compartment housing, L-shaped
- Aluminum, coated: 1.7 kg (3.75 lb)
- 316L: 4.3 kg (9.48 lb)

Temperature spacer
0.6 kg (1.32 lb)

Pressure-tight feedthrough
0.7 kg (1.54 lb)

Ex d glass feedthrough
0.5 kg (1.10 lb)

Pipe extension
- 1 000 mm: 0.9 kg (1.98 lb)
- 50 in: 1.15 kg (2.54 lb)

Process connection

See "Process connections" section

Protective cover, plastic
0.2 kg (0.44 lb)

Protective cover, 316L
0.93 kg (2.05 lb)

Materials

Materials in contact with process

Pipe extension

- With plastic coating: carrier material: 316L (1.4435 or 1.4404)
- With enamel coating: carrier material: Alloy C4

Tuning fork

- With plastic coating: carrier material: 316L (1.4435 or 1.4404)
- With enamel coating: carrier material: Alloy C4

Flanges

- With ECTFE, PFA (Edlon™) [1], PFA (RubyRed), PFA (conductive): carrier material: 316L (1.4404)
- With enamel coating: carrier material: A516 Gr.60 (1.0487), (ASTMA 529)
- Additional flanges:
  - According to EN/DIN 1092-1 from DN 25
  - According to ASME B16.5 from 1"
  - According to JIS B 2220 (RF) from 10K50

Materials not in contact with process

Single compartment housing, plastic

- Housing: PBT/PC
- Dummy cover: PBT/PC
- Cover with sight glass: PBT/PC and PC
- Cover seal: EPDM
- Potential equalization: 316L
- Seal under potential equalization: EPDM
- Plug: PBT-GF30-FR
- Seal on plug: EPDM
- Nameplate: plastic foil
- TAG plate: plastic foil, metal or provided by the customer

The cable entry with material specification can be ordered via the product structure "Electrical connection".

Single-compartment housing, aluminum, coated

- Housing: EN AC 43400 aluminum (Cu max. 0.1%)
- Housing coating, cover: polyester
- EN AC 43400 aluminum cover (Cu max. 0.1%) with Lexan 943A PC sight glass
  EN AC 43400 aluminum cover (Cu max. 0.1%) with borosilicate sight glass; for Ex d/XP, dust Ex
- Dummy cover: EN AC 43400 aluminum (Cu max. 0.1%)
- Cover sealing materials: HNBR
- Cover sealing materials: FVMQ (in low temperature version only)
- Plug: PBT-GF30-FR or aluminum
- Plug sealing material: EPDM
- Nameplate: plastic foil
- TAG plate: plastic foil, stainless steel or provided by the customer

The cable entry with material specification can be ordered via the product structure "Electrical connection".

1) FDA-compliant material in accordance with 21 CFR Part 177.1550/2600

Single compartment housing, 316L, hygienic

- Housing: stainless steel 316 L (1.4404)
- Dummy cover: stainless steel 316 L (1.4404)
- Cover stainless steel 316 L (1.4404) with PC Lexan 943A sight glass
  Cover stainless steel 316 L (1.4404) with borosilicate sight glass; can optionally be ordered as a mounted accessory
- Cover sealing materials: VMQ
- Potential equalization: 316L
- Seal under potential equalization: EPDM
- Plug: PBT-GF30-FR or stainless steel
- Plug sealing material: EPDM
- Nameplate: stainless steel housing labeled directly
- TAG plate: plastic foil, stainless steel or provided by the customer

The cable entry with material specification can be ordered via the product structure "Electrical connection".

Dual-compartment housing, L-shaped, aluminum, coated

- Housing: EN AC 43400 aluminum (Cu max. 0.1%)
- Housing coating, cover: polyester
- EN AC 43400 aluminum cover (Cu max. 0.1%) with Lexan 943A PC sight glass
  EN AC 43400 aluminum cover (Cu max. 0.1%) with borosilicate sight glass; for Ex d/XP, dust Ex
- Dummy cover: EN AC 43400 aluminum (Cu max. 0.1%)
- Cover sealing materials: HNBR
- Cover sealing materials: FVMQ (in low temperature version only)
- Plug: PBT-GF30-FR or aluminum
- Plug sealing material: EPDM
- Nameplate: plastic foil
- TAG plate: plastic foil, stainless steel or provided by the customer

The cable entry with material specification can be ordered via the product structure "Electrical connection".

Dual compartment housing, L-shaped, 316L

- Housing: stainless steel AISI 316L (1.4409)
  Stainless steel (ASTM A351 : CF3M (cast equivalent to material AISI 316L)/EN 10213 : 1.4409)
- Dummy cover: stainless steel AISI 316L (1.4409)
- Cover: stainless steel AISI 316L (1.4409) with borosilicate sight glass
- Cover sealing materials: HNBR
- Cover sealing materials: FVMQ (in low temperature version only)
- Plug: stainless steel
- Plug sealing material: EPDM
- Nameplate: stainless steel housing labeled directly
- TAG plate: plastic foil, stainless steel or provided by the customer

The cable entry with material specification can be ordered via the product structure "Electrical connection".

Wired-on nameplate

- Stainless steel
- Plastic film
- Provided by customer
- RFID tag: polyurethane potting compound

Electrical connection

Coupling M20, plastic
- Material: PA
- Seal on cable gland: EPDM
- Dummy plug: plastic

Coupling M20, nickel-plated brass
- Material: nickel-plated brass
- Seal on cable gland: EPDM
- Dummy plug: plastic

Coupling M20, 316L
- Material: 316L
- Seal on cable gland: EPDM
- Dummy plug: plastic

M20 thread
The device is supplied with M20 thread as standard.
Transport plug: LD-PE

Thread G ½
The device is supplied as standard with an M20 thread and an enclosed adapter to G ½ including documentation (aluminum housing, 316L housing, hygienic housing) or with a mounted adapter to G ½ (plastic housing).
- Adapter made of PA66-GF or aluminum or 316L (depends on housing version ordered)
- Transport plug: LD-PE

NPT ½ thread
The device is supplied as standard with an NPT ½ thread (aluminum housing, 316L housing) or with a mounted adapter to NPT ½ (plastic housing, hygienic housing).
- Adapter made of PA66-GF or 316L (depends on housing version ordered)
- Transport plug: LD-PE

M12 plug
- Material: nickel-plated CuZn or 316L (depends on housing version ordered)
- Transport cap: LD-PE

Operability

Operation concept

Operator-oriented menu structure for user-specific tasks
- Guidance
- Diagnostics
- Application
- System

Fast and safe commissioning
- Interactive wizard with graphical user interface for guided commissioning in FieldCare, DeviceCare or DTM, AMS and PDM-based third-party tools or SmartBlue
- Menu guidance with brief descriptions of the individual parameter functions
- Standardized operation at the device and in the operating tools
- PROFINET over Ethernet-APL: access to the device via web server

Integrated HistoROM data memory
- Adoption of data configuration when electronics modules are replaced
- Up to 100 event messages recorded in the device

Efficient diagnostic behavior increases measurement reliability
- Remedial action is integrated in plain text
- Diverse simulation options

Bluetooth® wireless technology (optionally integrated in local display)
- Quick and easy setup with SmartBlue app or PC with DeviceCare, version 1.07.05 and higher, or Field Xpert SMT70
- No additional tools or adapters required
- Encrypted single point-to-point data transmission (tested by Fraunhofer Institute) and password-protected communication via Bluetooth® wireless technology

Languages

Local display

The operating language of the local display (optional) can be selected via the Product Configurator.

If a different language was not selected, the local display is delivered from the factory with English.

The operating language can be changed subsequently via the **Language** parameter.

Local operation

FEL60H electronic insert - HART

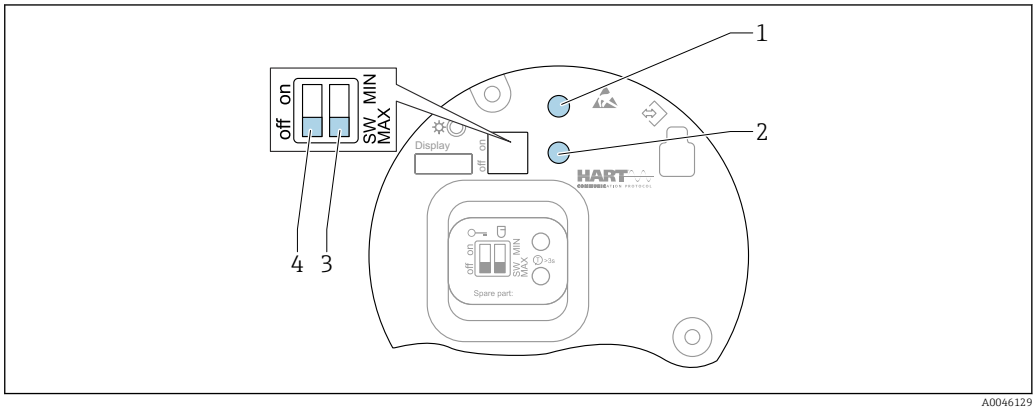

37 Operating keys and DIP switch on FEL60H electronic insert

1 Operating key for reset password
1+2 Operating keys for device reset (as-delivered state)
2 Operating key for Proof test
3 DIP switch for safety function
4 DIP switch for locking and unlocking the device

1: Operating key for reset password:
- For login via Bluetooth® wireless technology
- For Maintenance user role

1 + 2: Operating keys for resetting the device:
- Reset the device to the order configuration
- Press both keys 1 + 2 simultaneously

2: Operating key for Proof test:
- The output changes from the OK status to demand mode
- Press the key for > 3 s

3: DIP switch for safety function:
- SW: When the switch is set to "SW", the MIN or MAX setting is defined by the software (MAX = default value)
- MIN: In the MIN switch position, the value is permanently set to MIN irrespective of the software

4: Overview of the operating keys and DIP switch functions:
- Switch position on: Device locked
- Switch position off: Device unlocked

The minimum detection and maximum detection operating modes can be switched directly on the electronic insert:
- MIN (minimum detection): when the vibrating fork is uncovered, the output switches to demand mode, e.g. use to prevent pumps from running dry
- MAX (maximum detection): when the vibrating fork is covered, the output switches to demand mode, e.g. use as overfill protection system

The setting of the DIP switches on the electronic insert has priority over the settings made via other operation methods (e.g. FieldCare/DeviceCare).

Density switchover: A density preset can be ordered as an option or configured via the display, Bluetooth® wireless technology and HART.

Electronic insert (FEL60P) - Ethernet-APL

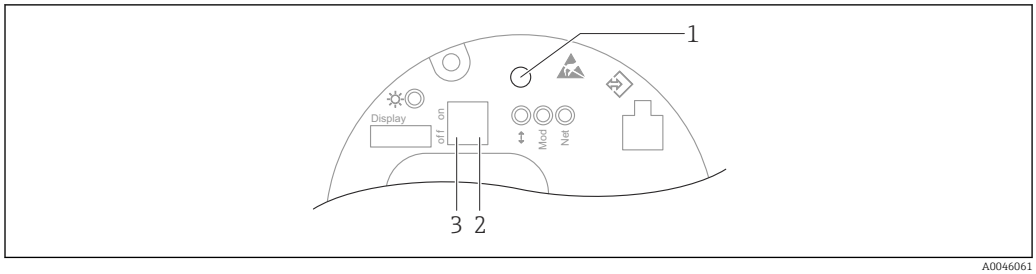

A0046061

38 Operating key and DIP switches on the electronic insert (FEL60P) - Ethernet-APL

1 Operating key for Reset password and Reset device
2 DIP switch for setting the service IP address
3 DIP switch for locking and unlocking the device

The setting of the DIP switches on the electronic insert has priority over the settings made via other operation methods (e.g. FieldCare/DeviceCare).

Local display

Device display (optional)

Functions:
- Display measured values along with fault and notice messages
- Background lighting, which switches from green to red in the event of an error
- The device display can be removed for easier operation

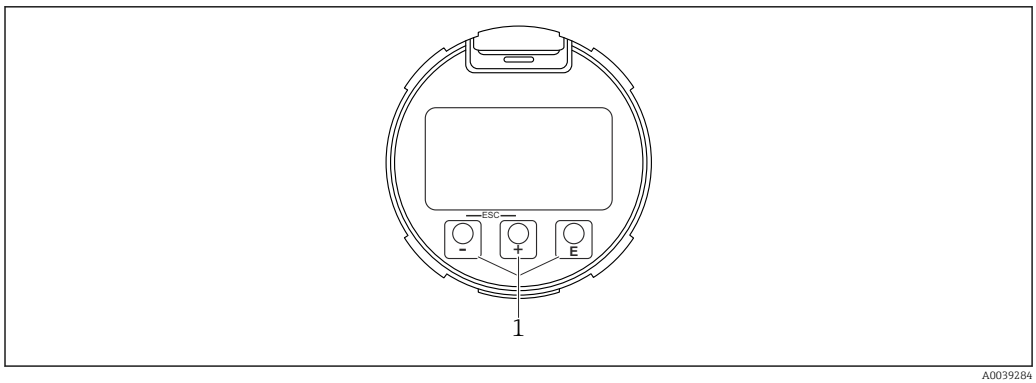

A0039284

39 Graphic display with optical operating keys (1)

Remote operation

Via 2-wire 4–20 mA HART protocol or Bluetooth® wireless technology

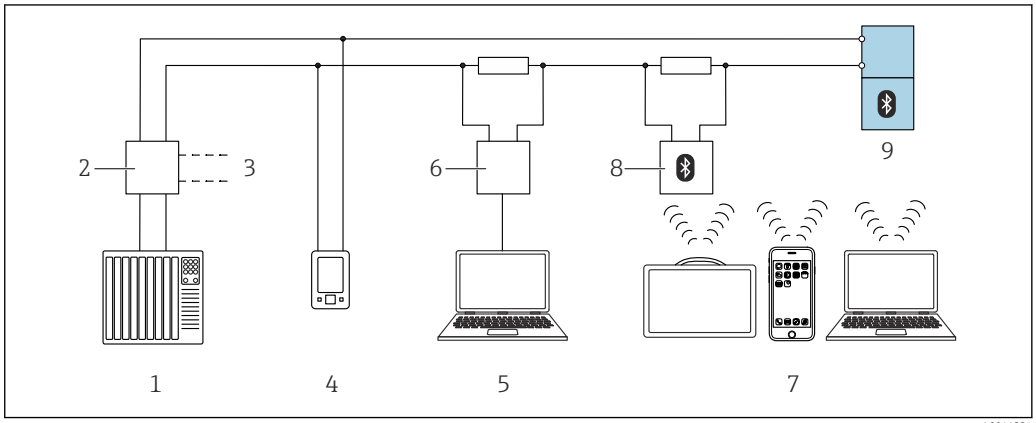

A0044334

40 *Options for remote operation via HART protocol*

1 *PLC (programmable logic controller)*
2 *Transmitter power supply unit, e.g. RN42 (with communication resistor)*
3 *Connection for Commubox FXA195 and AMS Trex™ device communicator*
4 *AMS Trex™ device communicator*
5 *Computer with operating tool (e.g. DeviceCare/FieldCare , AMS Device View, SIMATIC PDM)*
6 *Commubox FXA195 (USB)*
7 *Field Xpert, smartphone or computer with operating tool (e.g. DeviceCare)*
8 *Bluetooth® modem with connecting cable (e.g. VIATOR)*
9 *Transmitter*

Via PROFINET over Ethernet-APL network

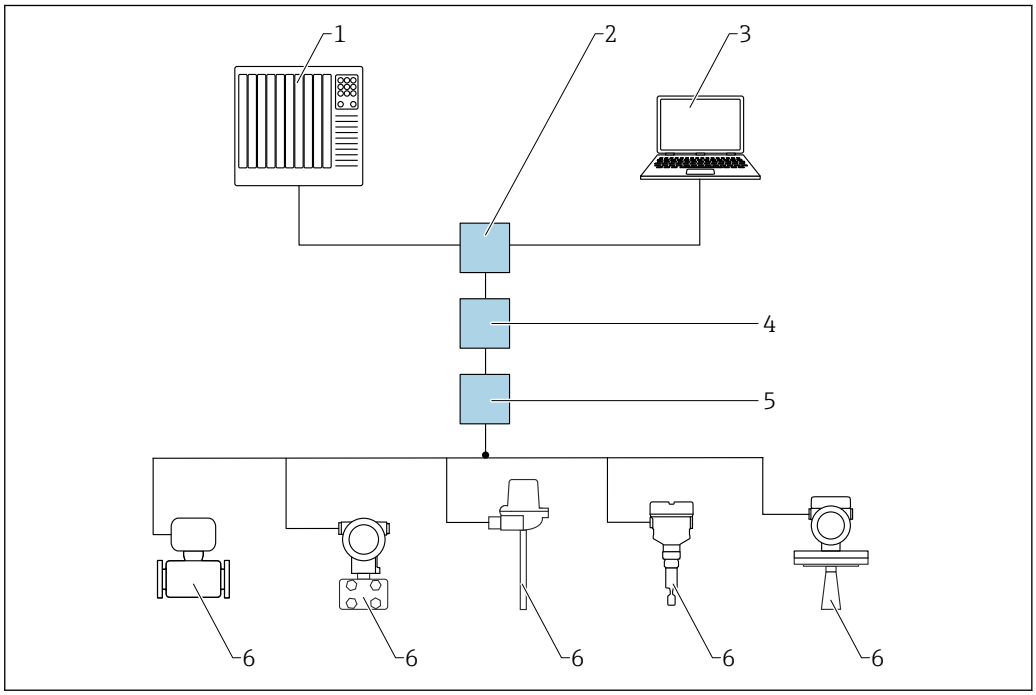

A0046097

41 *Options for remote operation via PROFINET over Ethernet-APL network: star topology*

1 *Automation system, e.g. Simatic S7 (Siemens)*
2 *Ethernet switch*
3 *Computer with web browser (e.g., Microsoft Edge) for accessing the integrated device web server or computer with operating tool (e.g. FieldCare, DeviceCare, SIMATIC PDM) with iDTM PROFINET Communication*
4 *APL power switch (optional)*
5 *APL field switch*
6 *APL field device*

Call up the website via the computer in the network. The IP address of the device must be known.

The IP address can be assigned to the device in a variety of ways:
- Dynamic Configuration Protocol (DCP), factory setting
  The IP address is automatically assigned to the device by the automation system (e.g. Siemens S7)
- Software addressing
  The IP address is entered via the **IP address** parameter
- DIP switch for service
  The device then has the fixed assigned IP address IP address 192.168.1.212
  ℹ The IP address is only adopted after a restart.
  The IP address can now be used to establish the network connection

The default setting is that the device uses the Dynamic Configuration Protocol (DCP). The device's IP address is automatically assigned by the automation system (e.g. Siemens S7).

Via Web browser (for devices with PROFINET)

Function scope

Thanks to the integrated Web server the device can be operated and configured via a Web browser. The structure of the operating menu is the same as for the local display. In addition to the measured values, device status information is also displayed and allows users to monitor the status of the device. Furthermore the device data can be managed and the network parameters can be configured.

Via service interface (CDI)

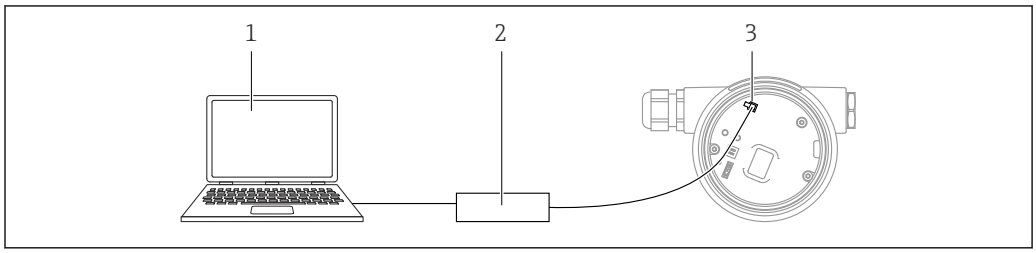

1 Computer with FieldCare/DeviceCare operating tool
2 Commubox
3 Service interface (CDI) of the device (= Endress+Hauser Common Data Interface)

Operation via Bluetooth® wireless technology (optional)

Prerequisite
- Measuring instrument with display including Bluetooth® wireless technology
- Smartphone or tablet with Endress+Hauser SmartBlue app or PC with DeviceCare from version 1.07.05 or FieldXpert SMT70

The connection has a range of up to 25 m (82 ft). The range can vary depending on environmental conditions such as attachments, walls or ceilings.

ℹ The operating keys on the display are locked as soon as the device is connected via Bluetooth.

Supported operating tools

Smartphone or tablet with Endress+Hauser SmartBlue app, DeviceCare as of version 1.07.05, FieldCare, DTM, AMS and PDM.

PC with Web server via fieldbus protocol.

System integration

HART

Version 7

PROFINET over Ethernet-APL

PROFINET Profile 4.02

HistoROM data management

When replacing the electronic insert, the stored data is transferred by reconnecting the HistoROM.

The device serial number is saved in the HistoROM. The electronics serial number is saved in the electronics.

Certificates and approvals

Current certificates and approvals for the product are available at www.endress.com on the relevant product page:

1. Select the product using the filters and search field.
2. Open the product page.
3. Select **Downloads**.

The features described in this section depend on the selected product configuration.

CE mark

The measuring system meets the legal requirements of the applicable EU Directives. These are listed in the corresponding EU Declaration of Conformity together with the standards applied. Endress +Hauser confirms successful testing of the device by affixing to it the CE mark.

RCM marking

The supplied product or measuring system meets the ACMA (Australian Communications and Media Authority) requirements for network integrity, interoperability, performance characteristics as well as health and safety regulations. Here, especially the regulatory arrangements for electromagnetic compatibility are met. The products bear the RCM marking on the nameplate.

A0029561

Ex approval

All data relating to explosion protection are provided in separate Ex documentation and are available from the Downloads Area. The Ex documentation is supplied as standard with all devices approved for use in explosion hazardous areas.

Explosion-protected smartphones and tablets

If used in hazardous areas, mobile devices with an Ex approval must be used.

Corrosion test

Standards and test methods:
- 316L: ASTM A262 Practice E and ISO 3651-2 Method A
- Alloy C22 and Alloy C276: ASTM G28 Practice A and ISO 3651-2 Method C
- 22Cr duplex, 25Cr duplex: ASTM G48 Practice A or ISO 17781 and ISO 3651-2 Method C

The corrosion test is confirmed for all wetted and pressure-bearing parts.

A 3.1 material certificate must be ordered as confirmation of the test.

General material compliance

Endress+Hauser guarantees compliance with all relevant laws and regulations, including the current guidelines for materials and substances.

Examples:
- RoHS
- China RoHS
- REACH
- POP VO (Stockholm Convention)

For further information and general declarations of compliance, see the Endress+Hauser website www.endress.com

Overfill protection system

Before mounting the device, observe the documentation from the WHG approvals (German Federal Water Act).

Approved for overfill protection systems and leakage detection.

Product Configurator: feature "Additional approval"

Functional safety

In combination with HART:

The device has been developed according to the IEC 61508 standard. The device is suitable for overfill protection systems and dry-run protection up to SIL 2 (SIL 3 with homogeneous redundancy).

A detailed description of the safety functions with the device, settings and functional safety data are provided in the "Functional Safety Manual" on the Endress+Hauser website: www.endress.com → Downloads.

Product Configurator: feature "Additional approval"

Subsequent confirmation of usability according to IEC 61508 is not possible.

Radio approval

Further information and currently available documentation can be found on the Endress+Hauser website: www.endress.com → Downloads.

CRN approval

Device versions with a CRN approval (Canadian Registration Number) are listed in the corresponding registration documents. CRN-approved devices are marked with a registration number.

Any restrictions regarding the maximum process pressure values are listed on the CRN certificate.

Product Configurator: feature "Additional approval"

Pressure equipment with permitted pressure less than 200 bar, no pressure-bearing volume

Pressure instruments with a process connection that does not have a pressurized housing do not fall within the scope of the Pressure Equipment Directive, irrespective of the maximum working pressure.

If pressure equipment does not have a pressure-bearing housing, there is no pressure accessory present within the meaning of the Directive.

Druckgeräterichtlinie DGRL (PED) 2014/68/EU, Artikel 2, Absatz 5

Process seal as per ANSI/ISA 12.27.01

North American practice for the installation of process seals.

In accordance with ANSI/ISA 12.27.01, Endress+Hauser devices are designed as either single seal or dual seal devices with a warning message. This allows the user to forego the use of - and save the cost of installing - an external secondary process seal in the mating pipe as required in ANSI/NFPA 70 (NEC) and CSA 22.1 (CEC).

These instruments comply with the North American installation practice and provide a very safe and cost-saving installation for pressurized applications with hazardous fluids.

Please refer to the Safety Instructions (XA) of the relevant device for further information.

EAC conformity

The measuring system meets the legal requirements of the applicable EAC guidelines. These are listed in the corresponding EAC Declaration of Conformity along with the standards applied.

The manufacturer confirms successful testing of the device by affixing to it the EAC mark.

ASME B 31.3/31.1

Design and materials in accordance with ASME B31.3/31.1. The welds are through-penetration welded and meet the requirements of the ASME Boiler and Pressure Vessel Code, Section IX and EN ISO 15614-1.

HART certification

HART interface

The measuring instrument is certified and registered by the FieldComm Group. The measuring system meets all the requirements of the following specifications:
- Certified according to HART 7
- The device can also be operated with certified devices of other manufacturers (interoperability)

PROFINET over Ethernet-APL certification

PROFINET interface

The device is certified and registered by the PNO (PROFIBUS Nutzerorganisation e. V.). The measuring system meets all the requirements of the following specifications:
- Certified according to:
  - Test specification for PROFINET devices
  - PROFINET PA Profile 4.02
  - PROFINET Netload Robustness Class 2 10 Mbit/s
  - APL conformance test
- The device can also be operated with certified devices of other manufacturers (interoperability)
- The device supports PROFINET S2 system redundancy.

Ordering information

Detailed ordering information is available from your nearest sales organization www.addresses.endress.com or in the Product Configurator at www.endress.com:

1. Select the product using the filters and search field.
2. Open the product page.
3. Select **Configuration**.

Product Configurator - the tool for individual product configuration
- Up-to-the-minute configuration data
- Depending on the device: direct input of information specific to the measuring point, such as the measuring range or operating language
- Automatic verification of exclusion criteria
- Automatic creation of the order code and its breakdown in PDF or Excel output format
- Ability to order directly in the Endress+Hauser Online Shop

Service

- Cleaned of oil+grease (wetted)
- ANSI safety red coating (housing cover)
- Switching delay setting to be spec.
- Setting for MIN safety mode
- Setting for HART burst mode PV
- Setting for max. alarm current
- Preset density > 0.4 g/cm³ (25.0 lb/ft³)
- Preset density > 0.5 g/cm³ (31.2 lb/ft³)
- Bluetooth communication is disabled on delivery

Test reports, declarations and inspection certificates

All test reports, declarations and inspection certificates are provided electronically in the *Device Viewer*:
Enter the serial number from the nameplate
(https://www.endress.com/de/pages/supporting-tools/device-viewer)

Product documentation on paper
Test reports, declarations and inspection certificates in hard copy can optionally be ordered with feature 570 "Service", Version I7 "Product documentation on paper". The documents are then provided with the device upon delivery.

Test, certificate, declaration

Versions can be selected for which the following certificates are available:
- Inspection certificate 3.1, EN10204 (material certificate, pressure-bearing parts)
- NACE MR0175 / ISO 15156 (wetted parts), declaration
- NACE MR0103 / ISO 17945 (wetted parts), declaration
- ASME B31.3 process piping, declaration
- ASME B31.1 process piping, declaration
- Pressure test, internal procedure, test report
- Helium leak-tightness test, internal procedure, test report
- Welding documentation, wetted/pressurized seams, declaration / ISO / ASME
  Welding documentation consisting of:
  - Welding drawing
  - WPQR (Welding Procedure Qualification Record) according to ISO 14613/ISO14614 or ASME Sect. IX
  - WPS (Welding Procedure Specifications)
  - WQR (Manufacturer Declaration for Welding Professionals' Qualifications)

Documentation currently available on the Endress+Hauser website: www.endress.com → Downloads or with the serial number of the device under Online Tools in the Device Viewer.

TAG

Measuring point (TAG)

The device can be ordered with a tag name.

Location of tag name
In the additional specification, select:
- Stainless steel tag plate
- Paper adhesive label
- TAG provided by the customer
- RFID tag
- RFID tag + stainless steel tag plate

- RFID tag + paper adhesive label
- RFID tag + tag provided by the customer
- IEC 61406 stainless steel tag
- IEC 61406 stainless steel + NFC tag
- IEC 61406 stainless steel tag, stainless steel tag
- IEC 61406 stainless steel tag + NFC, stainless steel tag
- IEC 61406 stainless steel tag, plate supplied
- IEC 61406 stainless steel tag + NFC, plate supplied

Definition of tag name
In the additional specification, specify:
Three lines of maximum 18 characters each
The specified tag name appears on the selected plate and/or on the RFID tag.

Visualization in SmartBlue app
The first 32 characters of the tag name
The tag name can always be changed specifically for the measuring point via Bluetooth.

Display in electronic nameplate (ENP)
The first 32 characters of the tag name

Application packages

Heartbeat Technology

Availability:
The Heartbeat Verification + Monitoring application package is optionally available for all device versions
The application package can be ordered together with the device or can be activated subsequently with an activation code.

SD02874F: Heartbeat Verification + Monitoring application package (HART)

SD03459F: Heartbeat Verification + Monitoring application package (PROFINET over Ethernet APL)

Heartbeat Technology module

Heartbeat Diagnostics
Continuously monitors and assesses the device condition and process conditions. Generates diagnostic messages when certain events occur and provides troubleshooting measures in accordance with NAMUR NE 107.

Heartbeat Verification
Performs a verification of the current device condition on demand and generates the Heartbeat Technology verification report showing the verification result.

Heartbeat Monitoring
Continuously provides device and/or process data for an external system. Analysis of this data provides a basis for process optimization and predictive maintenance.

Heartbeat Diagnostics

Diagnostic messages output to:
- the local display
- an asset management system (e.g. FieldCare or DeviceCare)
- an automation system (e.g. PLC)
- Web server

Heartbeat Verification

- Verification of device status in the installed state without interrupting the process
- Ensure measuring point reliability and documentation compliant to standards
- Verification on demand
- Clear measuring point analysis (Passed/Failed)
- High total test coverage within the framework of manufacturer specifications
- Compliance with regulatory requirements (e.g., ISO 9001:2015, Section 7.1.5.2)

"Heartbeat Verification" wizard:
- Integrated in the Heartbeat Verification module
- Operation via SmartBlue app, DTM, display
- Guides the user through the verification process step-by-step

Information contained in the verification report:
- Operating hours counter
- Temperature and frequency indicator
- Oscillation frequency in as-delivered state (in air) as reference value
- Oscillation frequency:
  - High oscillation frequency → Reference to corrosion
  - Reduced oscillation frequency → Note on buildup or covered sensor
    Deviations can be affected by the process temperature or process pressure
- Frequency history:
  Storage of last 16 sensor frequencies at the time of verification

Heartbeat Monitoring

- **Process window** wizard: Two frequency limits for monitoring the upper and lower range of the oscillation frequency (can be defined independently of one another). Changes in the process can be identified, e.g. corrosion or buildup.
- In combination with HART:
  Loop diagnostics wizard: Detection of elevated measuring circuit resistance values or declining power supply

Proof testing (HART)

Proof testing is only available for devices with HART communication that have a SIL or WHG (German Federal Water Act)approval.

A proof test is required at appropriate intervals in the following applications: SIL (IEC 61508/ IEC 61511), WHG (German Federal Water Act).

The **Proof test** wizard is available with the ordered SIL or WHG approval. The wizard guides the user through the entire process for creating the verification report. The verification report can be saved as a PDF file.

Accessories

The accessories currently available for the product can be selected at www.endress.com:

1. Select the product using the filters and search field.
2. Open the product page.
3. Select **Spare parts & Accessories**.

The accessories can be partially ordered via the "Accessory enclosed" product structure.

Device Viewer

All the spare parts for the device, along with the order code, are listed in the *Device Viewer* (www.endress.com/deviceviewer).

Weather protection cover: 316L, XW112

The weather protection cover can be ordered together with the device via the "Accessory enclosed" product structure.

It is used to protect against direct sunlight, precipitation and ice.

Weather protection cover 316L is suitable for the dual compartment housing made of aluminum or 316L. The delivery includes the holder for direct mounting on the housing.

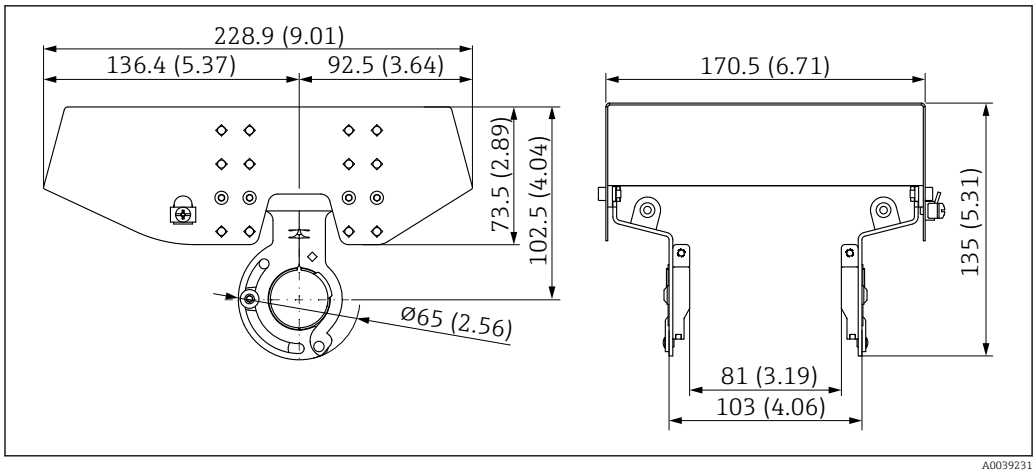

42 *Dimensions of weather protection cover, 316 L, XW112. Unit of measurement mm (in)*

Material
- Weather protection cover: 316L
- Clamping screw: A4
- Bracket: 316L

Accessory order code:
71438303

Special Documentation SD02424F

Weather protection cover, plastic, XW111

The weather protection cover can be ordered together with the device via the "Accessory enclosed" product structure.

It is used to protect against direct sunlight, precipitation and ice.

The plastic weather protection cover is suitable for the single compartment housing made of aluminum. The delivery includes the holder for direct mounting on the housing.

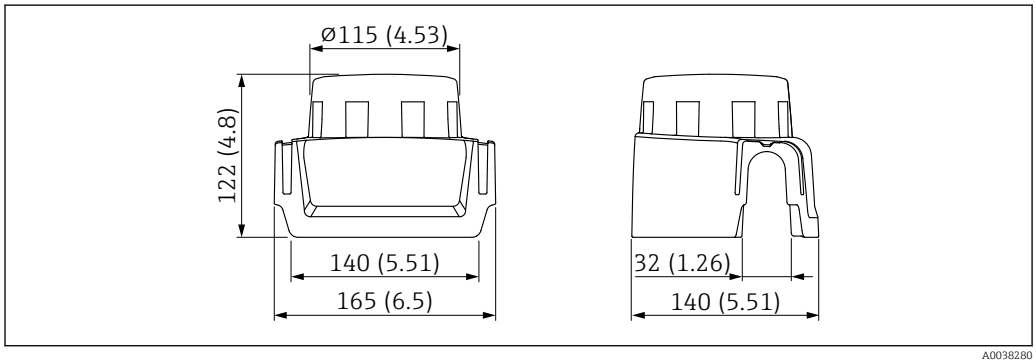

43 *Dimensions of weather protection cover, plastic, XW111. Unit of measurement mm (in)*

Material
Plastic

Accessory order code:
71438291

Special Documentation SD02423F

M12 socket

The M12 sockets listed are suitable for use in the temperature range −25 to 70 °C (−13 to 158 °F).

M12 socket IP69
- Terminated at one end
- Angled
- 5 m (16 ft) PVC cable (orange)
- Slotted nut 316L (1.4435)
- Body: PVC
- Order number: 52024216

M12 socket IP67
- Angled
- 5 m (16 ft) PVC cable (gray)
- Slotted nut Cu Sn/Ni
- Body: PUR
- Order number: 52010285

Field Xpert SMT70

Universal, high-performance tablet PC for device configuration in Ex Zone 2 and non-Ex areas

Technical Information TI01342S

DeviceCare SFE100

Configuration tool for HART, PROFIBUS and FOUNDATION Fieldbus field devices

Technical Information TI01134S

FieldCare SFE500

FDT-based plant asset management tool

It can configure all smart field units in your system and helps you manage them. By using the status information, it is also a simple but effective way of checking their status and condition.

Technical Information TI00028S

Documentation

For an overview of the scope of the associated Technical Documentation, refer to the following:
- *Device Viewer* (www.endress.com/deviceviewer): Enter the serial number from the nameplate
- *Endress+Hauser Operations app*: Enter serial number from nameplate or scan matrix code on nameplate.

Standard documentation

Document type: Operating Instructions (BA)
Installation and initial commissioning – contains all functions in the operating menu that are required for a typical measuring task. Functions beyond this scope are not included.

Document type: Description of Device Parameters (GP)
The document is part of the Operating Instructions and serves as a reference for parameters, providing a detailed explanation of each individual parameter of the operating menu.

Document type: Brief Operating Instructions (KA)
Quick guide to the first measured value – includes all essential information from incoming acceptance to electrical connection.

Document type: Safety Instructions, certificates
Depending on the approval, Safety Instructions are supplied with the device, e.g. XA. This documentation is an integral part of the Operating Instructions.
The nameplate indicates which Safety Instructions (XA) apply to the device in question.

Supplementary device-dependent documentation

Additional documents are supplied depending on the device version ordered: Always comply strictly with the instructions in the supplementary documentation. The supplementary documentation is an integral part of the device documentation.

Special Documentation

- SD02874F: Heartbeat Verification + Monitoring application package (HART)
- SD03459F: Heartbeat Verification + Monitoring application package (PROFINET over Ethernet APL)
- SD02530P: Remote operation via Bluetooth® wireless technology (radio approval, commissioning with Bluetooth® wireless technology)
- TI00426F: Weld-in adapters, process adapters and flanges (overview)

Registered trademarks

HART®
Registered trademark of the FieldComm Group, Austin, Texas, USA

PROFINET®
Registered trademark of the PROFIBUS User Organization, Karlsruhe, Germany

Ethernet-APL™
- Ethernet-APL ADVANCED PHYSICAL LAYER
- Registered trademark of the PROFIBUS Nutzerorganisation e.V. (Profibus User Organization), Karlsruhe - Germany

Bluetooth®
The *Bluetooth®* word mark and logos are registered trademarks owned by the Bluetooth SIG, Inc. and any use of such marks by Endress+Hauser is under license. Other trademarks and trade names are those of their respective owners.

Apple®
Apple, the Apple logo, iPhone, and iPod touch are trademarks of Apple Inc., registered in the U.S. and other countries. App Store is a service mark of Apple Inc.

Android®
Android, Google Play and the Google Play logo are trademarks of Google Inc.

71783267

www.addresses.endress.com

Endress+Hauser

People for Process Automation