BA02599F/00/EN/04.26-00
71783292
2026-09-11

Valid as of version
01.00.zz (Device software)



# Operating Instructions
# **Liquiphant FTL62 Density with Density Calculator QML51**

Vibronic
Density measurement for liquids

Endress+Hauser
People for Process Automation

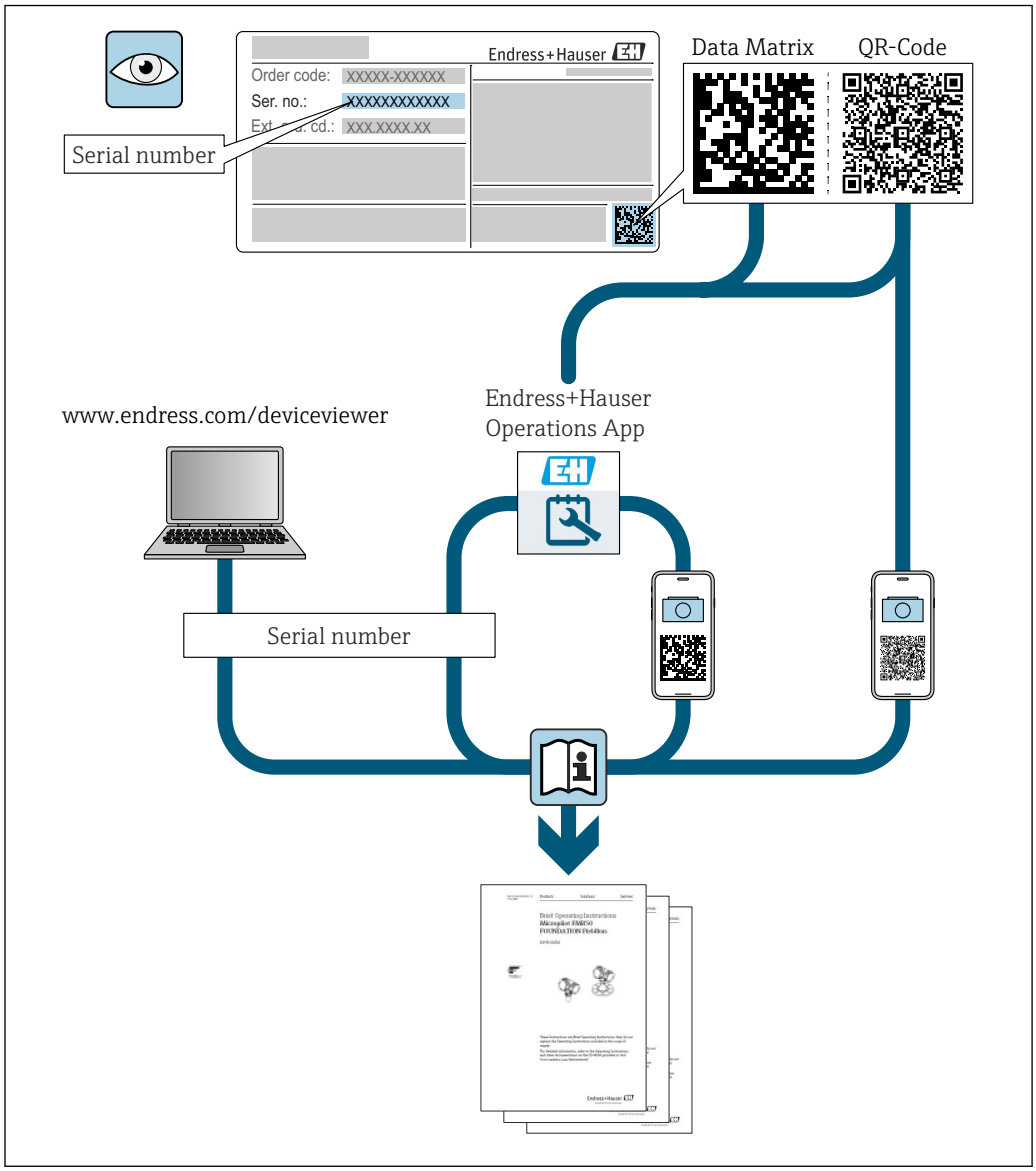


A0023555

- Make sure the document is stored in a safe place such that it is always available when working on or with the device
- Avoid danger to individuals or the facility: read the "Basic safety instructions" section carefully, as well as all other safety instructions in the document that are specific to working procedures

The manufacturer reserves the right to modify technical data without prior notice. The Endress+Hauser sales organization will supply you with current information and updates to these instructions.

# Table of contents


**1 About this document . . . . . 5**
1.1 Document function . . . . . 5
1.2 Symbols . . . . . 5
1.2.1 Safety symbols . . . . . 5
1.2.2 Electrical symbols . . . . . 5
1.2.3 Tool symbols . . . . . 5
1.2.4 Symbols for certain types of information . . . . . 5
1.2.5 Symbols in graphics . . . . . 6
1.3 Documentation . . . . . 6
1.4 Registered trademarks . . . . . 7

**2 Basic safety instructions . . . . . 7**
2.1 Requirements for the personnel . . . . . 7
2.2 Intended use . . . . . 7
2.3 Workplace safety . . . . . 8
2.4 Operational safety . . . . . 8
2.5 Product safety . . . . . 9
2.6 IT security . . . . . 9

**3 Product description . . . . . 9**
3.1 Measuring principle . . . . . 9
3.2 Measuring system . . . . . 10
3.3 Product design . . . . . 11

**4 Incoming acceptance and product identification . . . . . 11**
4.1 Incoming acceptance . . . . . 11
4.2 Product identification . . . . . 12
4.2.1 Nameplate . . . . . 12
4.2.2 Manufacturer address . . . . . 12
4.3 Storage and transport . . . . . 12
4.3.1 Storage conditions . . . . . 12
4.3.2 Transporting the device . . . . . 13

**5 Installation . . . . . 13**
5.1 Installation requirements . . . . . 14
5.1.1 Flow velocity - Installation in piping . 14
5.1.2 Inlet and outlet runs . . . . . 15
5.1.3 Correction factor . . . . . 16
5.1.4 Preventing buildup . . . . . 18
5.1.5 Take clearance into consideration . . . 18
5.1.6 Support the device . . . . . 18
5.1.7 Weld-in adapter with leakage hole . . 19
5.2 Installing the device . . . . . 19
5.2.1 Required tool . . . . . 19
5.2.2 Installation . . . . . 19
5.3 Post-mounting check . . . . . 22

**6 Electrical connection . . . . . 22**
6.1 Connecting requirements . . . . . 22
6.1.1 Cover with securing screw . . . . . 22
6.1.2 Connecting protective earth (PE) . . . . 23
6.2 Connecting the device . . . . . 23
6.2.1 2-wire density (electronic insert FEL60D) for density measurement . . . 23
6.2.2 Connecting the cables . . . . . 26
6.2.3 Post-connection check . . . . . 26

**7 Operation options . . . . . 27**
7.1 Overview of operation options . . . . . 27
7.1.1 Operation concept . . . . . 27
7.1.2 Elements on the electronic insert . . . . 27

**8 Commissioning . . . . . 27**
8.1 Post-installation and function check . . . . . 28
8.2 Switching on the device . . . . . 28

**9 Operation . . . . . 29**
9.1 Light signals . . . . . 29

**10 Diagnostics and troubleshooting . . . 30**
10.1 Diagnostic information via LEDs . . . . . 30
10.1.1 LED at electronic insert . . . . . 30

**11 Maintenance . . . . . 30**
11.1 Maintenance tasks . . . . . 30
11.1.1 Cleaning . . . . . 31

**12 Repair . . . . . 31**
12.1 General notes . . . . . 31
12.1.1 Repair concept . . . . . 31
12.1.2 Repairs to Ex-approved devices . . . . . 32
12.2 Spare parts . . . . . 32
12.3 Return . . . . . 32
12.4 Disposal . . . . . 32

**13 Accessories for Liquiphant Density . 32**
13.1 Device Viewer . . . . . 33
13.2 Weather protection cover for dual compartment housing, aluminum . . . . . 33
13.3 Weather protection cover for aluminum single compartment housing . . . . . 34
13.4 M12 socket . . . . . 34

**14 Technical data . . . . . 35**
14.1 Input . . . . . 35
14.1.1 Measured variable . . . . . 35
14.1.2 Measuring range . . . . . 35

14.2 Output . . . . . 35
14.2.1 Ex connection data . . . . . 35
14.3 Environment . . . . . 35
14.3.1 Ambient temperature range . . . . . 35
14.3.2 Operating altitude . . . . . 35
14.3.3 Climate class . . . . . 36
14.3.4 Degree of protection . . . . . 36
14.3.5 Pollution degree . . . . . 36
14.4 Process . . . . . 36
14.4.1 Process temperature range . . . . . 36
14.4.2 Thermal shock . . . . . 36
14.4.3 Process pressure range . . . . . 36
14.4.4 Pressure tightness . . . . . 37
14.5 Additional technical data . . . . . 37

**Index . . . . . 38**

# 1 About this document

## 1.1 Document function

These Operating Instructions contain all the information required in the various life cycle phases of the device: from product identification, incoming acceptance and storage, to installation, connection, operation and commissioning, through to troubleshooting, maintenance and disposal.

## 1.2 Symbols

### 1.2.1 Safety symbols

DANGER
This symbol alerts you to a dangerous situation. Failure to avoid this situation will result in serious or fatal injury.

WARNING
This symbol alerts you to a potentially dangerous situation. Failure to avoid this situation can result in serious or fatal injury.

CAUTION
This symbol alerts you to a potentially dangerous situation. Failure to avoid this situation can result in minor or medium injury.

NOTICE
This symbol alerts you to a potentially harmful situation. Failure to avoid this situation can result in damage to the product or something in its vicinity.

### 1.2.2 Electrical symbols

Ground connection
Grounded clamp, which is grounded via a grounding system.

Protective earth (PE)
Ground terminals, which must be grounded prior to establishing any other connections. The ground terminals are located on the inside and outside of the device.

### 1.2.3 Tool symbols

Flat-blade screwdriver

Allen key

Open-ended wrench

### 1.2.4 Symbols for certain types of information

**Permitted**
Procedures, processes or actions that are permitted

**Preferred**
Procedures, processes or actions that are preferred

**Forbidden**
Procedures, processes or actions that are forbidden

**Tip**
Indicates additional information

Reference to documentation

Reference to page

Reference to graphic

### 1.2.5 Symbols in graphics

**1, 2, 3, ...**
Item numbers

1., 2., 3.
Series of steps

Result of a step

Notice or individual step to be observed

**A, B, C, ...**
Views

**Viewing angle**
Indicates the object is shown from another view

**Hazardous area**
Indicates the hazardous area

**Safe area (non-hazardous area)**
Indicates the non-hazardous area

## 1.3 Documentation

For an overview of the scope of the associated Technical Documentation, refer to the following:
- *Device Viewer* (www.endress.com/deviceviewer): Enter the serial number from the nameplate
- *Endress+Hauser Operations app*: Enter serial number from nameplate or scan matrix code on nameplate.

The following document types are available in the Downloads area of the Endress+Hauser website (www.endress.com/downloads), depending on the product configuration:

| Document type | Purpose and content of the document |
|---|---|
| Technical Information (TI) | **Planning aid**<br>This document contains all the technical data on the product and provides an overview of everything that can be ordered with the product. |
| Brief Operating Instructions (KA) | **Quick guide to obtaining the first measured value**<br>The Operating Instructions contain all the essential information about the product from incoming acceptance to initial commissioning. |
| Operating Instructions (BA) | **Reference**<br>The Operating Instructions contain the information that is required in the various phases of the life cycle of the product: From product identification, incoming acceptance and storage, to mounting, connection, operation and commissioning through to troubleshooting, maintenance and disposal. |
| Description of Device Parameters (GP) | **Reference for parameters**<br>The document contains detailed explanations of readable or configurable parameters in the product. The description is aimed at those who work with the product over its entire life cycle and perform specific configurations. |

| Document type | Purpose and content of the document |
|---|---|
| Safety Instructions (XA) | Safety Instructions for electrical equipment in hazardous areas are supplied with the product depending on the approval. These are an integral part of the Operating Instructions.<br>The nameplate indicates the Safety Instructions (XA) that are relevant to the product. |
| Supplementary device-dependent documentation (SD/FY) | Always comply strictly with the instructions in the relevant supplementary documentation. The supplementary documentation is an integral part of the product documentation. |

## 1.4 Registered trademarks

**Modbus®**
Registered trademark of SCHNEIDER AUTOMATION, INC.

**OPC UA**
Registered trademark of the OPC Foundation, Scottsdale, Arizona, USA

**HART®**
Registered trademark of the FieldComm Group, Austin, Texas, USA

# 2 Basic safety instructions

## 2.1 Requirements for the personnel

The personnel for installation, commissioning, diagnostics and maintenance must fulfill the following requirements:
- Trained, qualified specialists must have a relevant qualification for this specific function and task.
- Are authorized by the plant owner/operator.
- Are familiar with federal/national regulations.
- Before starting work, read and understand the instructions in the manual and supplementary documentation as well as the certificates (depending on the application).
- Follow instructions and comply with basic conditions.

The operating personnel must fulfill the following requirements:
- Are instructed and authorized according to the requirements of the task by the facility's owner-operator.
- Follow the instructions in this manual.

## 2.2 Intended use

The device described in this manual is intended only for the density measurement of liquids.

The measuring system consists of:
- one Density Calculator QML51,
- up to two Liquiphant Density units,
- up to two temperature sensors, and
- up to two pressure measuring cells.

Density Calculator QML51 uses mathematical methods and standards to calculate derived variables such as the concentration of a medium.

Do not exceed or drop below the relevant limit values for the device
See the Technical Documentation

**Incorrect use**
The manufacturer is not liable for harm caused by improper or unintended use.

Avoid mechanical damage:
- Do not touch or clean device surfaces with pointed or hard objects.

Clarification for borderline cases:
- For special media and fluids for cleaning, Endress+Hauser is glad to provide assistance in verifying the corrosion resistance of fluid-wetted materials, but does not accept any warranty or liability.

**Residual risks**
Due to the transfer of heat from the process and power dissipation within the electronics, the temperature of the Liquiphant housing may increase to up to 80 °C (176 °F) during operation. When in operation, the sensor can reach a temperature close to the medium temperature.

Danger of burns from contact with surfaces!
- In the event of elevated fluid temperatures, ensure protection against contact to prevent burns.

## 2.3 Workplace safety

For work on and with the device:
- Wear the required personal protective equipment as per national regulations.

## 2.4 Operational safety

Damage to the device!
- Operate the device only if it is in proper technical condition, free from errors and faults.
- The operator is responsible for the trouble-free operation of the device.

**Configuration, testing and maintenance work on the device**

Process safety may be at risk during configuration, testing and maintenance work on the device.
- Alternative supervisory measures must be taken to guarantee the operational safety and process safety.

**Modifications to the device**

Unauthorized modifications to the device are not permitted and can lead to unforeseeable dangers.
- If modifications are nevertheless required, consult Endress+Hauser.

**Repair**

To ensure continued operational safety and reliability:
- Only perform repair work on the device if this is expressly permitted.
- Observe federal/national regulations pertaining to the repair of an electrical device.
- Use original spare parts and accessories from Endress+Hauser only.

**Hazardous area**

To eliminate danger to persons or the facility when the device is used in the hazardous area (e.g. explosion protection):
- Check the nameplate to verify if the device ordered can be put to its intended use in the hazardous area.
- Comply with the instructions in the separate supplementary documentation, which is an integral part of this manual.

## 2.5 Product safety

This state-of-the-art device is designed and tested in accordance with good engineering practice to meet operational safety standards. It left the factory in a condition in which it is safe to operate.

It meets general safety standards and legal requirements. It also complies with the EU directives listed in the device-specific EU declaration of conformity. The manufacturer confirms this by affixing the CE mark.

## 2.6 IT security

The manufacturer warranty is valid only if the product is installed and used as described in the Operating Instructions. The product is equipped with security mechanisms to protect it against any inadvertent changes to the settings.

IT security measures, which provide additional protection for the product and associated data transfer, must be implemented by the operators themselves in line with their security standards.

# 3 Product description

Liquiphant FTL62 sensor with electronic insert FEL60D

For measuring the density of liquid media in conjunction with Density Calculator QML51. Also suitable for use in hazardous areas.

Different coatings (plastic or enamel) offer a high degree of corrosion protection for applications in aggressive media.

## 3.1 Measuring principle

**The measuring system consists of the following main components:**
- Liquiphant Density
- Density calculator

In conjunction with the density calculator, the Liquiphant Density measures the density of a Newtonian, purely viscous, liquid in pipes and tanks.

A piezoelectric drive causes the vibrating fork of the Liquiphant Density to vibrate at its resonance frequency. Changes in liquid density cause a change in the resonance frequency of the vibrating fork. As a result, the density of the medium has a direct impact on the resonance frequency of the vibrating fork. This effect is used for density measurement.

In the density calculator, the density of the liquid is calculated from the resonance frequency of the vibrating fork transmitted by the sensor and from stored sensor-specific parameters. To compensate for temperature and pressure influences, additional corresponding sensors can be connected to the density calculator.

## 3.2 Measuring system

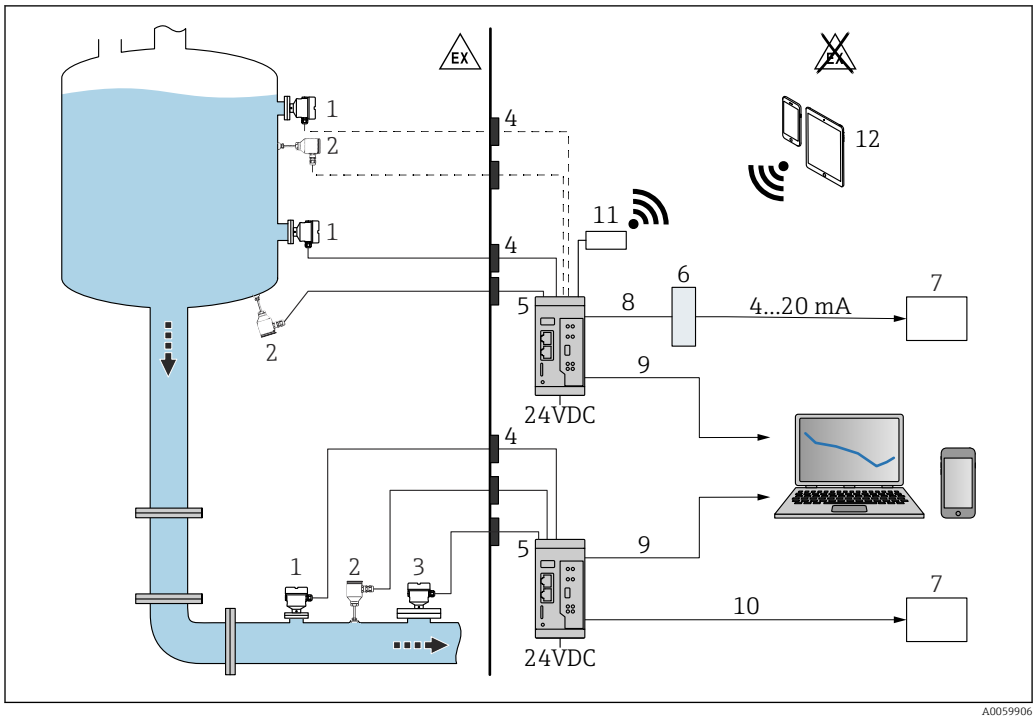


1 *Density measurement with Density Calculator QML51*

1 *Liquiphant Density with electronic insert FEL60D → pulse output*
2 *Temperature sensor, e.g.4 to 20 mAoutput*
3 *Pressure transmitter 4 to 20 mAoutput; required for pressures above 6 bar (87 psi) or for pressure fluctuations.*
4 *Ex barrier (Liquiphant Density, temperature and/or pressure measuring cell installed in the hazardous area)*
5 *Density Calculator QML51*
6 *Modbus TCP to 4 to 20 mA converter*
7 *Programmable logic controller (PLC)*
8 *Modbus TCP*
9 *Ethernet*
10 *Modbus TCP or OPC UA*
11 *TELTONIKA Router RUT241 (accessory). For a wireless connection.*
12 *Mobile devices*

For use in hazardous areas: Ex barrier via RN22 active barrier. The two-channel RN22 active barrier powers analog device circuits and safety equipment up to SIL 2 (SC 3). The intrinsically safe, HART® transparent interface provides a reliable connection between the field devices and Density Computer QML51. It is connected to 2-wire/4-wire devices in hazardous areas and provides a second galvanically isolated signal output in accordance with NAMUR NE 175.

In addition to calculating the density of a liquid medium, Density Calculator QML51 can also determine the reference density of the medium and the concentration of a solution, as well as detect up to four different media or an empty pipeline.

In doing so, the density calculator evaluates up to two measuring points and directly supplies connected two-wire transmitters with auxiliary power. This allows the connection of up to two Liquiphant Density sensors and two temperature sensors for compensation of temperature effects in order to calculate reference densities.

For concentration determination, stored standards such as ICUMSA for sugar concentrations, OIML ITS-90 for ethanol, and various preconfigured calculations for electrolyte solutions (according to the Laliberté-Cooper model) can be used.

Specific reference density or concentration tables can be entered manually in the form of linearization tables or imported into the density calculator in standard data formats (e.g., .csv, .xlsx) and used for calculations.

Density and concentration values can be output in various units, for example, SI units, °Baume, °Brix or °API.

Configuration of the QML51 is performed via an integrated web server, which can be accessed via a secure TLS connection using a standard web browser.

For output to a PLC or a SCADA system, the QML51 supports the Ethernet protocols Modbus TCP and OPC UA. If a current signal is required for connection to a PLC, this can be generated via a converter. A converter that generates up to 4 channels with an analog 4 to 20 mA signal from the Modbus TCP protocol is available as an accessory.

## 3.3 Product design

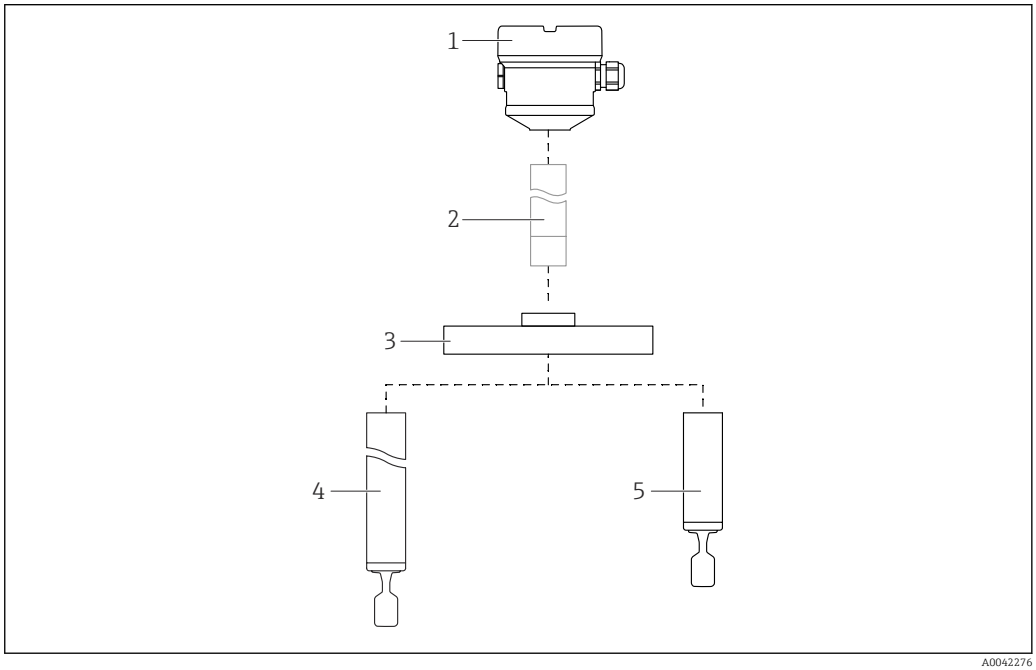


*2 Liquiphant FTL62 product design*

*1 Housing with electronic insert FEL60D and cover*
*2 Temperature spacer, pressure-tight feedthrough (second line of defense), optional*
*3 Process connection flange*
*4 Pipe extension probe with tuning fork*
*5 Short pipe probe with tuning fork*

**Coatings**
- Plastic-coated or enamel-coated: flange, pipe extension and tuning fork
- No coating: temperature spacer, pressure-tight feedthrough

# 4 Incoming acceptance and product identification

## 4.1 Incoming acceptance

On receipt of the delivery:

1. Check the packaging for damage.
   ↳ Report all damage immediately to the manufacturer.
   Do not install damaged components.

2. Check the scope of delivery using the delivery note.
3. Compare the data on the nameplate with the order specifications on the delivery note.
4. Check the technical documentation and all other necessary documents, e.g. certificates, to ensure they are complete.

If one of the conditions is not satisfied, contact the manufacturer.

## 4.2 Product identification

The following options are available for identification of the device:
- Nameplate specifications
- Order code with breakdown of the device features on the delivery note
- Enter the serial numbers from the nameplates in *Device Viewer* (www.endress.com/deviceviewer): all the information about the device is displayed.

### 4.2.1 Nameplate

**Do you have the correct device?**

The nameplate provides you with the following information on the device:
- Manufacturer identification, device designation
- Order code
- Extended order code
- Serial number
- Tag name (TAG) (optional)
- Technical values such as supply voltage, current consumption, ambient temperature, communication-specific data (optional)
- Degree of protection
- Approvals with symbols
- Reference to Safety Instructions (XA) (optional)

▶ Compare the information on the nameplate with the order.

### 4.2.2 Manufacturer address

Endress+Hauser SE+Co. KG
Hauptstraße 1
79689 Maulburg, Germany

Place of manufacture: See nameplate.

## 4.3 Storage and transport

### 4.3.1 Storage conditions

- Use the original packaging
- Store the device in clean and dry conditions and protect from damage caused by shocks

**Storage temperature**

- **Device Liquiphant:** −40 to +80 °C (−40 to +176 °F)
- **Density Computer QML51:**−25 to +85 °C (−13 to +185 °F)

### 4.3.2 Transporting the device

NOTICE

**Improper handling of the device, particularly of coated components such as flange, pipe extension or vibrating fork.**

Scratches or impacts may cause damage to the coated surface of the device.

- ▶ Transport the device to the measuring point in the original packaging.
- ▶ Protect coated components.
- ▶ Only handle the device by the housing, flange or extension pipe.

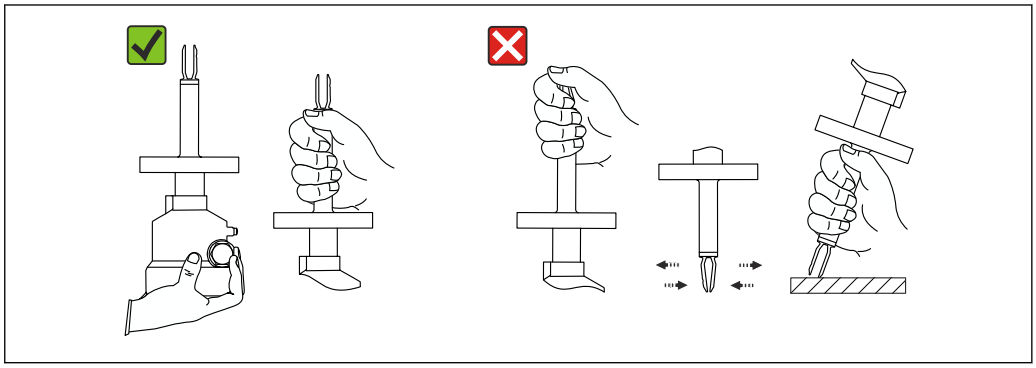

A0042281

*3 Handling during transport or handling of the device*

Do not bend, shorten or extend the vibrating fork.

## 5 Installation

Mounting instructions

- Any orientation for version with a pipe length of up to 500 mm (19.7 in) approx.
- Vertical orientation from above for device with long pipe
- Minimum distance between the fork tip and the tank wall or pipe wall: 10 mm (0.39 in)

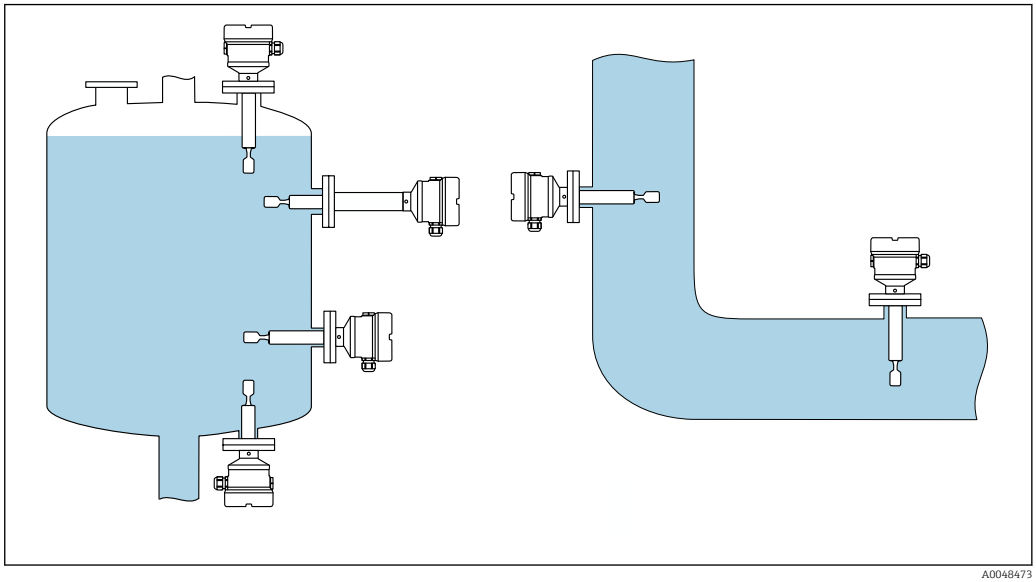

A0048473

*4 Installation examples for a vessel, tank or pipe*

## 5.1 Installation requirements

The mounting location must be selected such that the vibrating fork and the membrane are always immersed in the medium.

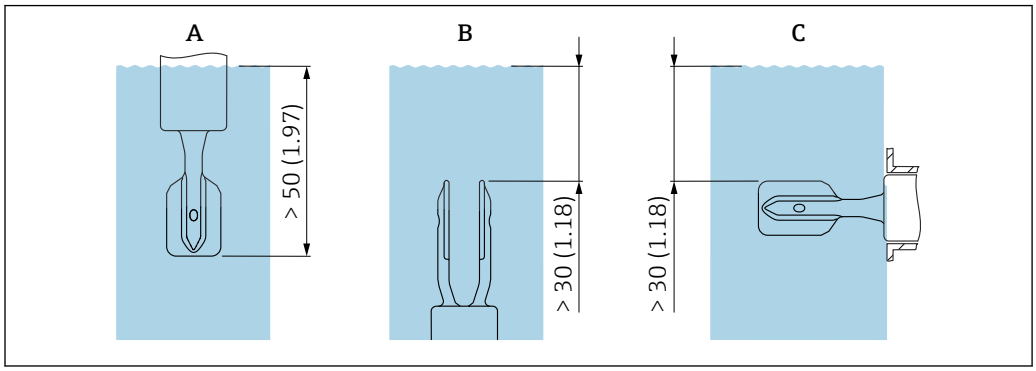


*5 Unit mm (in)*

*A Installation from above*
*B Installation from below*
*C Installation from the side*

- Avoid air bubbles in pipe or nozzle
- Ensure suitable ventilation

Maximum viscosity: 350 mPa·s (3.5 P)

### 5.1.1 Flow velocity - Installation in piping

**Install the tuning fork within the medium flow**

- Flow velocity: < 2 m/s (6.56 ft/s) per second
- Prevents the formation of air bubbles (1)

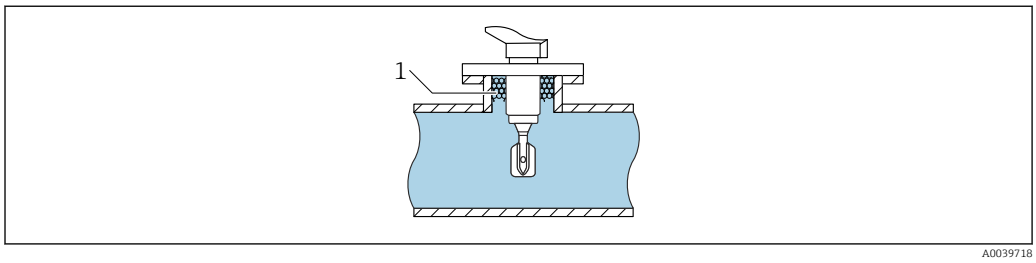


*6 Installation example in pipes within the media flow*

**Install the tuning fork away from the direct flow of medium**

Flow velocity: < 2 m/s (6.56 ft/s)

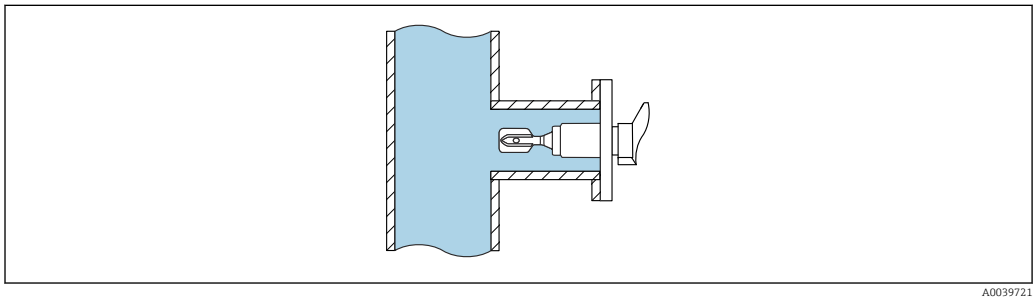


*7 Installation example in pipes away from the direct flow of medium*

### 5.1.2 Inlet and outlet runs

**Inlet run**

If possible, install the sensor as far upstream as possible, e.g. valves, T-pieces, elbows, flange elbows, etc.

To comply with the accuracy specification, the inlet run must meet the following requirements:

Inlet run: ≥ 5x DN (nominal diameter) - min. 750 mm (29.5 in)

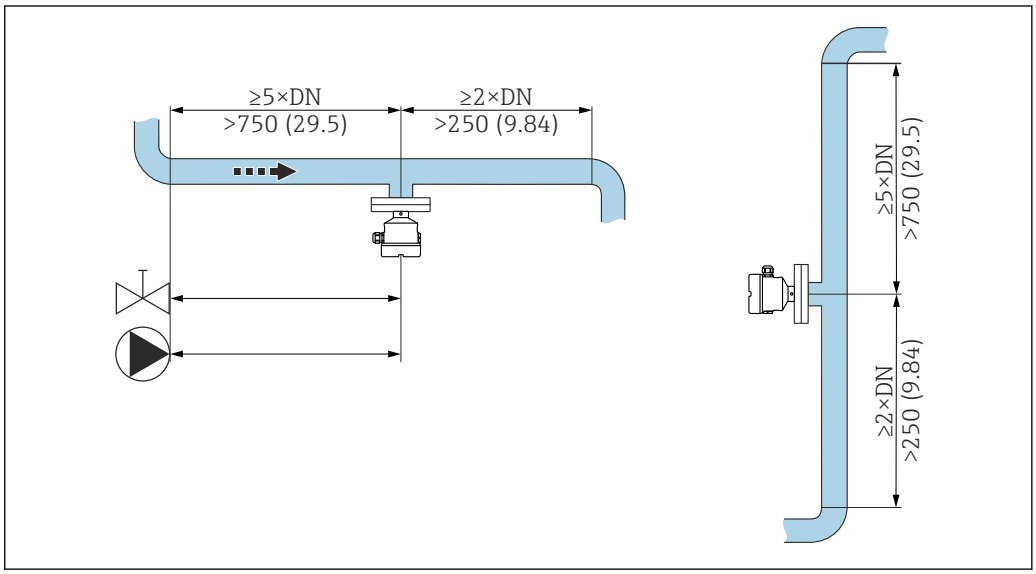


*8 Installing the inlet run. Unit of measurement mm (in)*

**Outlet run**

To comply with the accuracy specification, the outlet run must meet the following requirements:

Outlet run: ≥ 2x DN (nominal diameter) - min. 250 mm (9.84 in)

The pressure and temperature sensor must be installed on the outlet side of the flow direction after the Liquiphant density sensor. When installing pressure and temperature measuring points downstream of the device, make sure the distance between the measuring point and the device is sufficient.

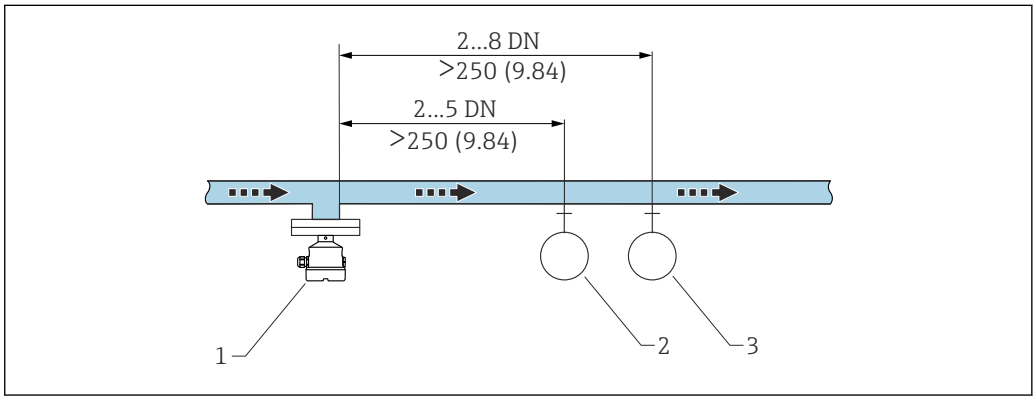


*9 Installing the outlet run. Unit of measurement mm (in)*

*1 Liquiphant density sensor*
*2 Pressure measuring point*
*3 Temperature measuring point*

### 5.1.3 Correction factor

If the vibration of the vibrating fork is affected by conditions at the mounting location, the measurement result can be adjusted using a correction factor (r).

#### Standard installation

Correction factor “r” as a function of the height “h”, for entry in the Density Computer QML51:

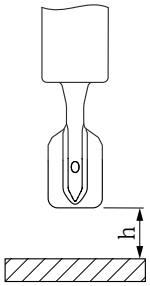


A0039687

| h | r |
|---|---|
| 12 mm (0.47 in) | 1.0026 |
| 14 mm (0.55 in) | 1.0016 |
| 16 mm (0.63 in) | 1.0011 |
| 18 mm (0.71 in) | 1.0008 |
| 20 mm (0.79 in) | 1.0006 |
| 22 mm (0.87 in) | 1.0005 |
| 24 mm (0.94 in) | 1.0004 |
| 26 mm (1.02 in) | 1.0004 |
| 28 mm (1.10 in) | 1.0004 |
| 30 mm (1.18 in) | 1.0003 |
| 32 mm (1.26 in) | 1.0003 |
| 34 mm (1.34 in) | 1.0002 |
| 36 mm (1.42 in) | 1.0001 |
| 38 mm (1.50 in) | 1.0001 |
| 40 mm (1.57 in) | 1.0000 |

#### Installation in a bypass

Correction factor "r" as a function of the internal diameter of bypass "D", for entry in the Density Computer QML51:

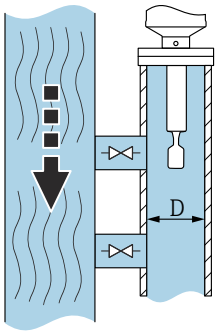


A0039689

| D | r |
|---|---|
| <44 mm (1.73 in) | - |
| 44 mm (1.73 in) | 1.0191 |
| 46 mm (1.81 in) | 1.0162 |
| 48 mm (1.89 in) | 1.0137 |
| 50 mm (1.97 in) | 1.0116 |
| 52 mm (2.05 in) | 1.0098 |
| 54 mm (2.13 in) | 1.0083 |
| 56 mm (2.20 in) | 1.0070 |
| 58 mm (2.28 in) | 1.0059 |
| 60 mm (2.36 in) | 1.0050 |
| 62 mm (2.44 in) | 1.0042 |
| 64 mm (2.52 in) | 1.0035 |
| 66 mm (2.60 in) | 1.0030 |
| 68 mm (2.68 in) | 1.0025 |
| 70 mm (2.76 in) | 1.0021 |

| | D | r |
|---|---|---|
| | 72 mm (2.83 in) | 1.0017 |
| | 74 mm (2.91 in) | 1.0014 |
| | 76 mm (2.99 in) | 1.0012 |
| | 78 mm (3.07 in) | 1.0010 |
| | 80 mm (3.15 in) | 1.0008 |
| | 82 mm (3.23 in) | 1.0006 |
| | 84 mm (3.31 in) | 1.0005 |
| | 86 mm (3.39 in) | 1.0004 |
| | 88 mm (3.46 in) | 1.0003 |
| | 90 mm (3.54 in) | 1.0003 |
| | 92 mm (3.62 in) | 1.0002 |
| | 94 mm (3.70 in) | 1.0002 |
| | 96 mm (3.78 in) | 1.0001 |
| | 98 mm (3.86 in) | 1.0001 |
| | 100 mm (3.94 in) | 1.0001 |
| | >100 mm (3.94 in) | 1.0000 |

### Installation in pipe

Correction factor "r" as a function of the internal diameter of pipe "D", for entry in the Density Computer QML51:

| | D | r |
|---|---|---|
| 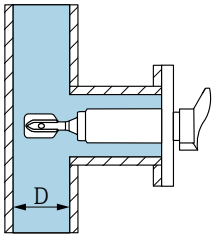  A0039707 | <44 mm (1.73 in) | - |
| | 44 mm (1.73 in) | 1.0225 |
| | 46 mm (1.81 in) | 1.0167 |
| | 48 mm (1.89 in) | 1.0125 |
| | 50 mm (1.97 in) | 1.0096 |
| | 52 mm (2.05 in) | 1.0075 |
| | 54 mm (2.13 in) | 1.0061 |
| | 56 mm (2.20 in) | 1.0051 |
| | 58 mm (2.28 in) | 1.0044 |
| | 60 mm (2.36 in) | 1.0039 |
| | 62 mm (2.44 in) | 1.0035 |
| | 64 mm (2.52 in) | 1.0032 |
| | 66 mm (2.60 in) | 1.0028 |
| | 68 mm (2.68 in) | 1.0025 |
| | 70 mm (2.76 in) | 1.0022 |
| | 72 mm (2.83 in) | 1.0020 |
| | 74 mm (2.91 in) | 1.0017 |
| | 76 mm (2.99 in) | 1.0015 |
| | 78 mm (3.07 in) | 1.0012 |
| | 80 mm (3.15 in) | 1.0009 |
| | 82 mm (3.23 in) | 1.0007 |

| | D | r |
|---|---|---|
| | 84 mm (3.31 in) | 1.0005 |
| | 86 mm (3.39 in) | 1.0004 |
| | 88 mm (3.46 in) | 1.0003 |
| | 90 mm (3.54 in) | 1.0002 |
| | 92 mm (3.62 in) | 1.0002 |
| | 94 mm (3.70 in) | 1.0001 |
| | 96 mm (3.78 in) | 1.0001 |
| | 98 mm (3.86 in) | 1.0001 |
| | 100 mm (3.94 in) | 1.0001 |
| | >100 mm (3.94 in) | 1.0000 |

### 5.1.4 Preventing buildup

Allow for maintenance intervals if required!

### 5.1.5 Take clearance into consideration

Allow sufficient space outside the tank for mounting, connecting and replacing the electronic insert.

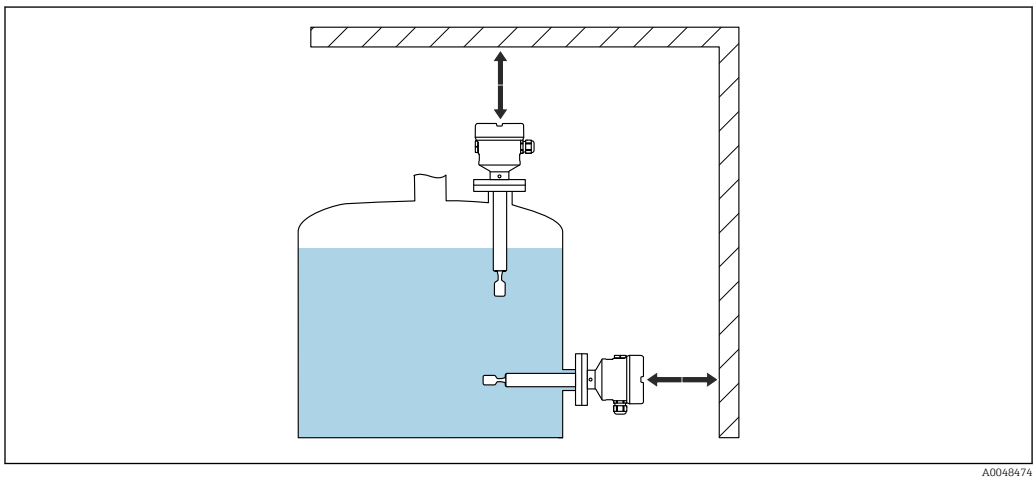


*10 Take clearance into consideration*

### 5.1.6 Support the device

NOTICE

**If the device is supported incorrectly, shocks and vibrations can damage the coated surface.**

- Only use a support in conjunction with ECTFE or PFA plastic coating.
- Only use suitable supports.

Support the device in the event of severe dynamic load. Maximum lateral loading capacity of the pipe extensions and sensors: 75 Nm (55 lbf ft).

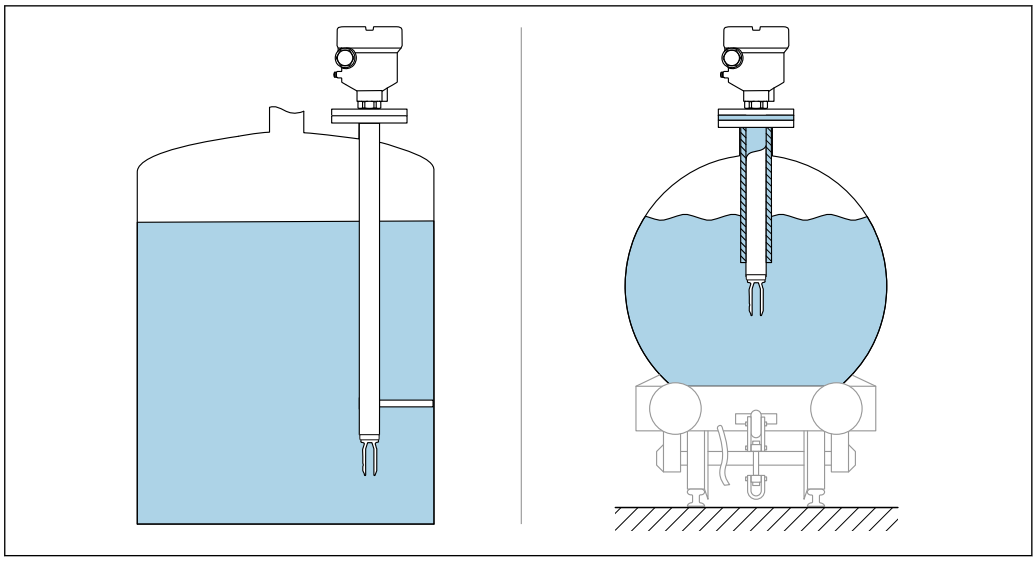


11 *Support in the event of dynamic load*

### 5.1.7 Weld-in adapter with leakage hole

Position the weld-in adapter so that the leakage hole points downwards. This allows any leakage to be detected at an early stage, as the escaping medium becomes visible.

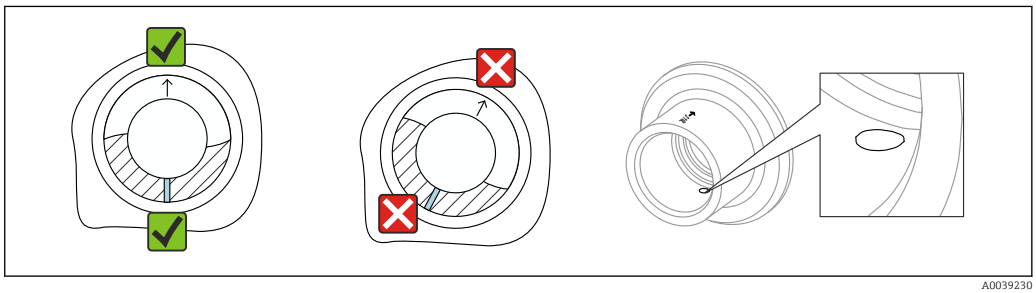


12 *Weld-in adapter with leakage hole*

## 5.2 Installing the device

### 5.2.1 Required tool

- Open-ended wrench for sensor installation
- Allen key for housing locking screw

### 5.2.2 Installation

#### Align the vibrating fork using the marking

The vibrating fork can be aligned using the marking in such a way that the medium drains off easily and buildup is avoided.

- Markings for threaded connections: Circle (material specification/thread designation opposite)
- Markings for flange or clamp connections: Line or double line

In addition, the threaded connections have a matrix code that is **not** used for alignment.

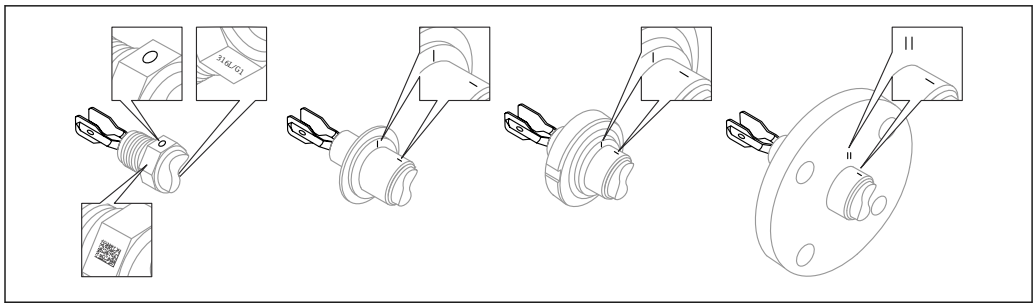


A0039125

13 *Position of the vibrating fork when installed horizontally in the vessel using the marking*

### Installing the device in piping

**NOTICE**

**Incorrect alignment of the tuning fork**

Vortices and eddies can falsify the measuring result.

- ▶ Align the tuning fork in the flow direction for internal fixtures in pipes or tanks with an agitator.

- The flow velocity of the medium must not exceed 2 m/s (6.56 ft/s) during operation
- Flow velocity > 2 m/s: Separate the tuning fork from the direct flow of media by using structural features such as a bypass or pipe expansion to reduce the flow velocity to max. 2 m/s (6.56 ft/s)
- The flow will not be significantly impeded if the tuning fork is correctly aligned and the marking is pointing in the direction of flow.
- A marking on the process connection indicates the position of the tuning fork. Threaded connection = dot on the hexagon head; flange = two lines on the flange. The marking is visible when installed.

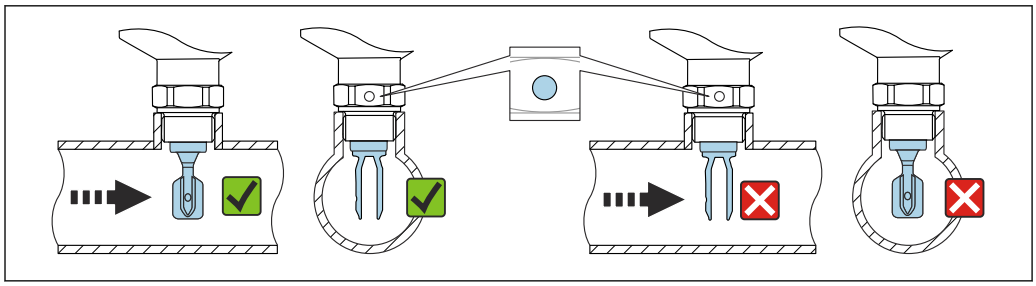

A0034851

14 *Installation in pipes (take fork position and marking into consideration)*

### Screwing in the device

- Turn by the hex bolt only, 15 to 30 Nm (11 to 22 lbf ft)
- Do not turn at the housing!

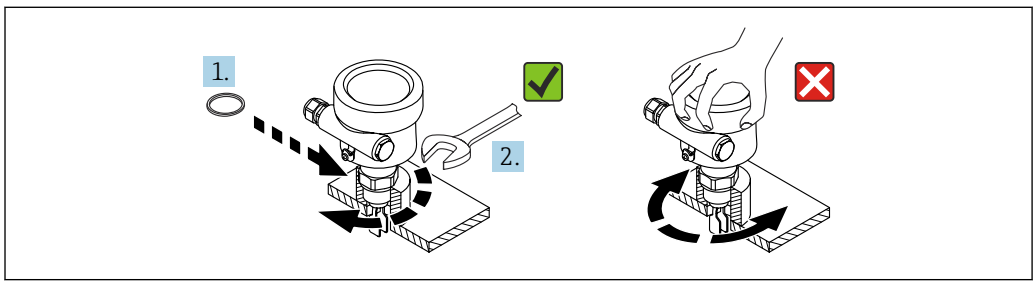


A0034852

15 *Screwing in the device*

### Aligning the cable entry

All housings can be aligned. Forming a drip loop on the cable prevents moisture from entering the housing.

*Housing without set screw*

The device housing can be rotated up to 350°.

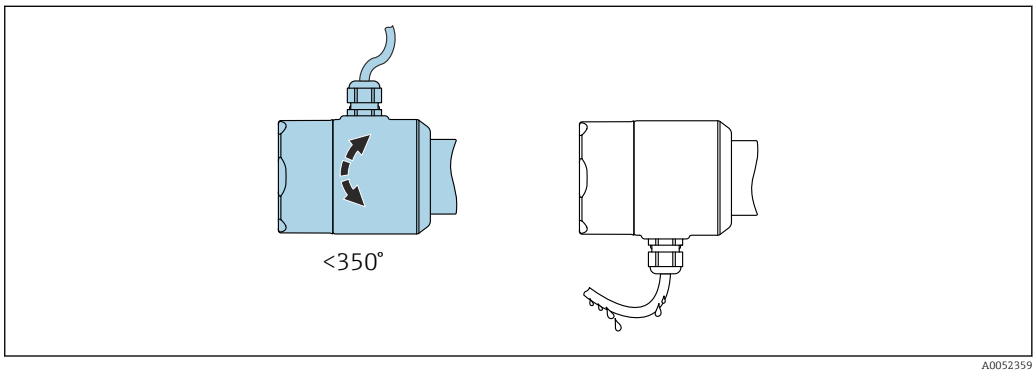


16 *Housing without set screw; form a drip loop on the cable.*

*Housing with locking screw*

**NOTICE**

**The locking screw is not sufficiently tightened when the device is delivered.**
The housing may rotate and become loose due to vibration.
- Tighten the locking screw to 3.5 Nm (2.58 lbf ft).

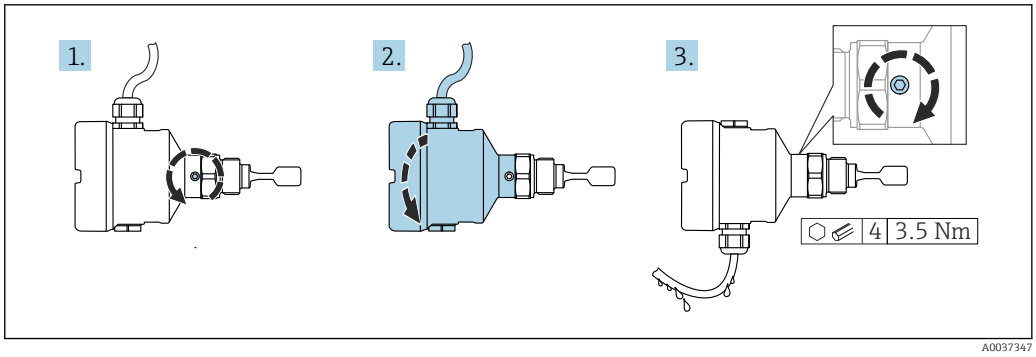


17 *Housing with external locking screw; form a drip loop on the cable*

1. Loosen the external locking screw (maximum 1.5 turns).
2. Turn the housing and align the cable entry.
3. Tighten the external locking screw.

### Rotating the housing

The housing can be rotated up to 380° by loosening the locking screw.

**NOTICE**

**The housing cannot be completely unscrewed.**
- Loosen the external locking screw by a maximum of 1.5 turns. If the screw is turned further or completely removed (beyond the screw lifting point), small parts (counter disk) may become loose and fall out.
- Tighten the locking screw (hex socket 4 mm (0.16 in)) to 3.5 Nm (2.58 lbf ft) ±0.3 Nm (±0.22 lbf ft).

**Closing the housing covers**

NOTICE

**Thread and housing cover damaged from dirt and fouling!**

- ▶ Remove dirt (e.g. sand) on the thread of the covers and housing.
- ▶ If you continue to encounter resistance when closing the cover, check the thread again for fouling.

**Housing thread**
The threads of the electronics and connection compartment can be coated with an anti-friction coating.
The following applies for all housing materials:
☒ **Do not lubricate the housing threads.**

## 5.3 Post-mounting check

❑ Is the device undamaged (visual inspection)?

❑ Are the measuring point number and labeling correct (visual inspection)?

❑ Is the device adequately protected from precipitation and direct sunlight?

❑ Is the device properly secured?

❑ Does the device comply with the measuring point specifications?

For example:
- Process temperature
- Process pressure
- Ambient temperature
- Measuring range

# 6 Electrical connection

## 6.1 Connecting requirements

### 6.1.1 Cover with securing screw

The cover is locked by a securing screw in devices for use in hazardous areas with certain explosion protection.

NOTICE

**If the securing screw is not positioned correctly, the cover cannot provide secure sealing.**

- ▶ Open the cover: slacken the screw of the cover lock with a maximum of 2 turns so that the screw does not fall out. Fit the cover and check the cover seal.
- ▶ Close the cover: screw the cover securely onto the housing, making sure that the securing screw is positioned correctly. There should not be any gap between the cover and housing.

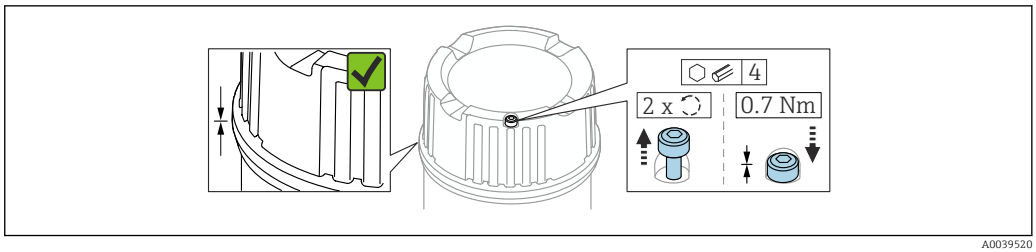


18 *Cover with securing screw*

### 6.1.2 Connecting protective earth (PE)

When the device is used in hazardous areas, it must always be included in the potential equalization of the system, irrespective of the operating voltage. This is possible by connecting to the inner or outer protective ground connection (PE).

## 6.2 Connecting the device

**Housing thread**
The threads of the electronics and connection compartment can be coated with an anti-friction coating.
The following applies for all housing materials:
**Do not lubricate the housing threads.**

### 6.2.1 2-wire density (electronic insert FEL60D) for density measurement

NOTICE

**Operation with other switching units is not permitted.**
Destruction of electronic components.

- Do not install the FEL60D electronic insert in devices that were originally used as level switches.

### Terminal assignment

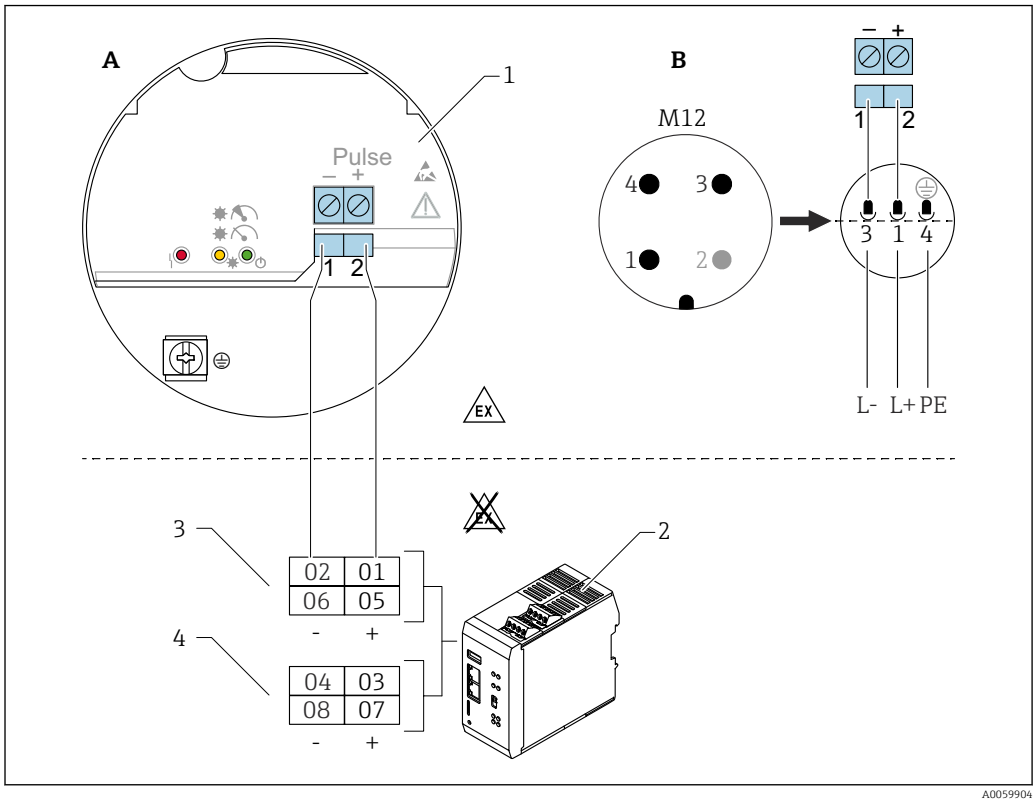


19 *Connection diagram: connection of electronic insert FEL60D to the Density Calculator QML51*

*A Connection wiring with terminals*
*B Connection wiring with M12 plug in housing as per EN61131-2 standard*
*1 Electronic insert FEL60D*
*2 Density Calculator QML51*
*3 PFM channels (default setting)*
*4 4 to 20 mA(HART) channels (default setting), e.g. for temperature measuring devices*

The channels are preset. The configuration can be changed.

It is not possible to connect a device with a pulse output (PFM) and a device with a 4 to 20 mA HART or HART-only transmission to the same terminal block if the measured values are to be transmitted via HART communication.

It is not possible to connect two devices with a pulse output (PFM) to the same terminal block.

The following devices can be connected to one terminal block:
- One device with a pulse output and one additional device with an analog output (4 to 20 mA).
- One device with a pulse output and one additional device with a 4 to 20 mA HART output, provided that HART communication is not used.
- Only one device with a pulse output. An additional device with a pulse output cannot be connected to the same terminal block.
- One or 2 devices with 4 to 20 mA or 4 to 20 mA HART In this case, HART communication can be used by both devices.

The previous Liquiphant Density version with FEL50D is compatible with Density Calculator QML51.

### Supply voltage

U = DC 24 V ±20 %, only suitable for connecting to the Density Computer QML51

The device must be powered by a voltage supply categorized as "CLASS 2" or "SELV".

### Power consumption

- FTL62 Density: P < 160 mW
- Density Computer QML51: P < 9 W

### Current consumption

FTL62

Density: I < 10 mA

### Overvoltage protection

Overvoltage category I

### Adjusting Liquiphant with density electronics FEL60D

**There are 3 different types of adjustment:**

- Standard adjustment (as delivered state):
  To determine the sensor characteristics, the fork parameters are measured under two conditions (vacuum and a defined water bath). The device-specific parameters determined are supplied with the device in an adjustment report. These parameters must be transferred to the Density Computer QML51.
- Special adjustment (select in the Product Configurator):
  To determine the sensor characteristics, the fork parameters are measured under three conditions (vacuum and two defined water baths at specified temperatures). The device-specific parameters determined are supplied with the device in an adjustment report. These parameters must be transferred to the Density Computer QML51.
  This type of adjustment achieves an even higher level of accuracy.
- Field adjustment:
  During field adjustment, the density determined by the user is transferred to the Density Computer QML51.

All the necessary parameters of the Liquiphant Density are documented in the **adjustment report** and in the **sensor pass**.

The documents are included in the scope of delivery.

Further information and the documentation currently available can be found on the Endress+Hauser website: www.endress.com → Downloads.

### Density measurement

The Liquiphant Density measures the density of a liquid medium in pipes and tanks. The device is suitable for all Newtonian (purely viscous) fluids. In addition, the device is also suitable for use in hazardous areas.

The measurement can be affected by:
- Air bubbles at the sensor
- Sensor not fully covered by medium
- Solid media buildup on the sensor
- High fluid velocity in pipes
- Severe turbulence in the pipe due to inlet and outlet runs that are too short
- Corrosion of the fork
- Non-Newtonian (not purely viscous) behavior of fluids

### 6.2.2 Connecting the cables

**Required tools**

- Flat-blade screwdriver (0.6 mm x 3.5 mm) for terminals
- Suitable tool with width across flats AF24/25 (8 Nm (5.9 lbf ft)) for M20 cable gland

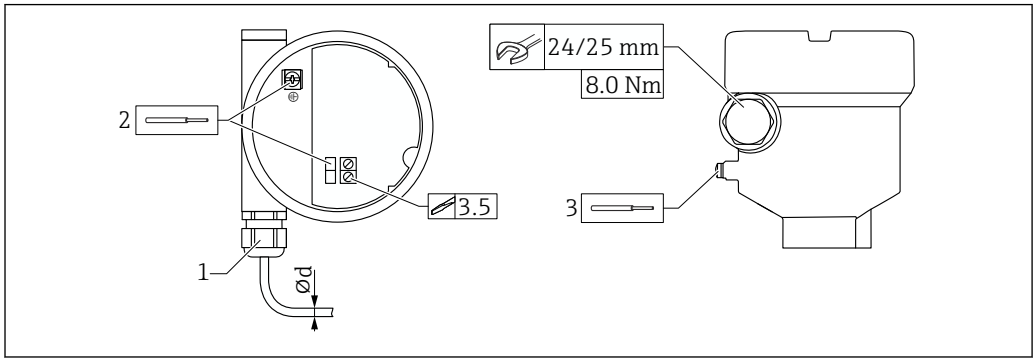


*20 Example of coupling with cable entry, electronic insert with terminals*

*1 M20 coupling (with cable entry), example*
*2 Conductor cross-section maximum 2.5 mm² (AWG14), ground terminal on inside in housing + terminals on the electronics*
*3 Conductor cross-section maximum 4.0 mm² (AWG12), ground terminal on outside of the housing (example: plastic housing with outer protective ground connection (PE))*
*Ød Nickel-plated brass 7 to 10.5 mm (0.28 to 0.41 in),*
*Plastic 5 to 10 mm (0.2 to 0.38 in),*
*Stainless steel 7 to 12 mm (0.28 to 0.47 in)*

**Pay attention to the following when using the M20 coupling**
Following cable entry:
- Counter-tighten the coupling
- Tighten the union nut of the coupling with 8 Nm (5.9 lbf ft)
- Screw the enclosed coupling into the housing with 3.75 Nm (2.76 lbf ft)

### 6.2.3 Post-connection check

- ❑ Is the device or cable undamaged (visual inspection)?
- ❑ Do the cables used comply with the requirements?
- ❑ Do the mounted cables have adequate strain relief?
- ❑ Are the cable glands mounted and firmly tightened?
- ❑ Does the supply voltage match the information on the nameplate?
- ❑ No reverse polarity, is terminal assignment correct?
- ❑ If supply voltage is present, is the green LED lit?
- ❑ Are all the housing covers installed and tightened?
- ❑ Optional: Is the cover tightened with securing screw?

# 7 Operation options

## 7.1 Overview of operation options

### 7.1.1 Operation concept

Operation with the Density Computer QML51 For details, see documentation for the Density Computer QML51.

### 7.1.2 Elements on the electronic insert

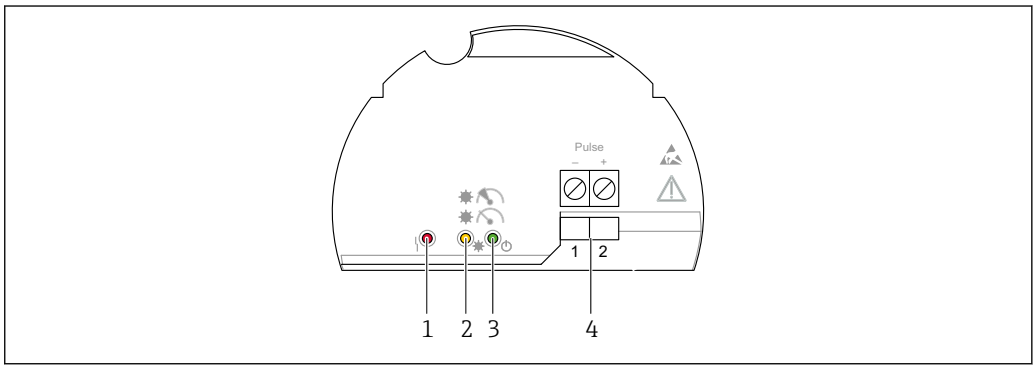


*21 Electronic insert FEL60D*

1 *LED red, for warning or alarm*
2 *LED yellow, stability of measurement*
3 *LED green, operational status (device is on)*
4 *Pulse output terminals*

# 8 Commissioning

The contents of this section apply to the Liquiphant.
See also the Operating Instructions for the density calculator: BA02545S.

**NOTICE**

**Do not check correct functioning of the tuning fork by hand.**
The coating of the tuning fork may become damaged and impair correct functioning.
▶ Immerse the tuning fork in a container with liquid, e.g. in water.

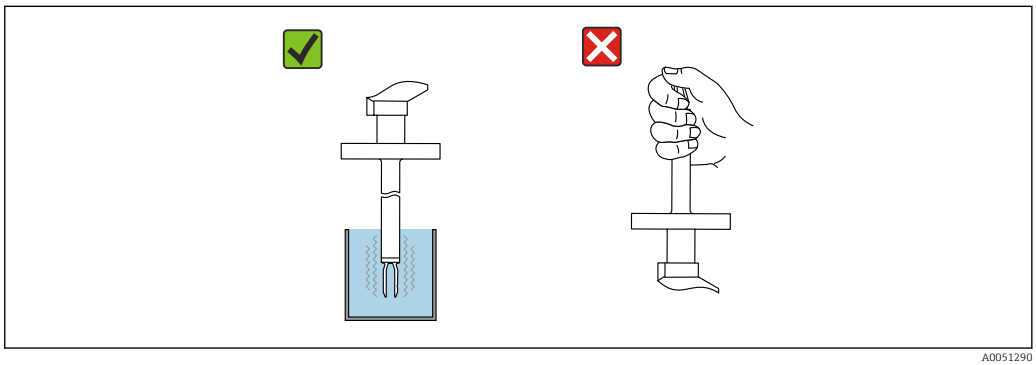


*22 Functional test of the vibrating fork*

## 8.1 Post-installation and function check

Before commissioning the measuring point, check whether the post-installation and post-connection checks have been performed.

Post-mounting check

Post-connection check

## 8.2 Switching on the device

- Switch on
  - The green LED is lit and the yellow LED flashes 2-3 times

The measurement is stable if both LEDs (green and yellow) are then lit.

# 9 Operation

The contents of this section apply to the Liquiphant.
See also the Operating Instructions for the density calculator: BA02545S.

## 9.1 Light signals

**Yellow LED**
Symbols, information
/ Stable measurement
/ Unstable measurement/process conditions
● Maintenance required

**Green LED**
Symbols, information
/ Power on
/ ● Power off

**Red LED**
Symbols, information
/ ● No fault
Maintenance required
Device failure

For more information, see the Technical Information for Liquiphant Density.

# 10 Diagnostics and troubleshooting

The contents of this section apply to the Liquiphant.
See also the Operating Instructions for the density calculator: BA02545S.

The Liquiphant Density indicates warnings and errors via the LEDs on the electronic insert. The faults diagnosed by the device are displayed in accordance with NE 107. The device behavior corresponds to the diagnostic message (warning or fault).

The device behaves in accordance with NAMUR Recommendation NE 131 "NAMUR standard device requirements for field devices for standard applications".

## 10.1 Diagnostic information via LEDs

### 10.1.1 LED at electronic insert

**indicator: power supply or off**
- No supply voltage present: check supply voltage
- Reverse polarity: check terminal assignment
- Signal line is defective: check signal line
- Incorrect terminal assignment on QML51: Check the terminal configuration on the QML51

**indicator: unstable process conditions**
- Extreme vibrations from an external source: isolate measuring point from vibrations
- Extremely turbulent flow: provide a calming section
- Flow rate > 2 m/s: keep vibrating fork away from direct flow of medium
- Buildup: remove buildup, allow for cleaning intervals

**indicator: maintenance required**
- Extreme vibrations from an external source: isolate measuring point from vibrations
- Flow rate > 2 m/s: keep vibrating fork away from direct flow of medium
- Buildup: remove buildup, allow for cleaning intervals
- Vibrating fork is blocked: change installation position

**indicator: device failure**
- Electronic insert is defective: replace electronic insert
- No connection to sensor: replace sensor

# 11 Maintenance

## 11.1 Maintenance tasks

No specific maintenance work is required.

### 11.1.1 Cleaning

**Cleaning of surfaces not in contact with the medium**

- Recommendation: Use a lint-free cloth that is either dry or slightly dampened using water.
- Do not use any sharp objects or aggressive cleaning agents that corrode the surfaces (e.g. displays, housing) and seals.
- Do not use high-pressure steam.
- Observe the degree of protection of the device.

The cleaning agent used must be compatible with the materials of the device configuration. Do not use cleaning agents with concentrated mineral acids, bases or organic solvents.

**Cleaning of surfaces in contact with the medium**

Note the following for cleaning and sterilization in place (CIP/SIP):
- Use only cleaning agents to which the materials in contact with the medium are sufficiently resistant.
- Observe the permitted maximum medium temperature.

**Cleaning the vibrating fork**

It is not permitted to use the device with abrasive media. Material abrasion on the vibrating fork can result in the device malfunctioning.

- Clean the vibrating fork as necessary
- Cleaning is also possible in the installed state, e.g. CIP Cleaning in Place and SIP Sterilization in Place

# 12 Repair

## 12.1 General notes

### 12.1.1 Repair concept

Endress+Hauser repair concept
- The devices have a modular design
- Customers can carry out repairs

For more information on service and spare parts, please contact your Endress+Hauser sales representative.

### 12.1.2 Repairs to Ex-approved devices

**WARNING**

**Incorrect repair can compromise electrical safety!**
Explosion hazard!

- Only specialist personnel or the manufacturer's service team may carry out repairs on Ex-certified devices in accordance with national regulations.
- Relevant standards and national regulations on hazardous areas, safety instructions and certificates must be observed.
- Only use original spare parts from the manufacturer.
- Please note the device designation on the nameplate. Only identical parts may be used as replacements.
- Carry out repairs according to the instructions.
- Only the manufacturer's service team is permitted to modify a certified device and convert it to another certified version.

## 12.2 Spare parts

Product spare parts that are currently available can be found online at:
www.endress.com/onlinetools

## 12.3 Return

The requirements for safe device return can vary depending on the device type and national legislation.

1. Refer to the web page for information: https://www.endress.com
2. If returning the device, pack the device in such a way that it is reliably protected against impact and external influences. The original packaging offers the best protection.

## 12.4 Disposal

If required by the Directive 2012/19/EU on waste electrical and electronic equipment (WEEE), the product is marked with the depicted symbol in order to minimize the disposal of WEEE as unsorted municipal waste. Do not dispose of products bearing this marking as unsorted municipal waste. Instead, return them to the manufacturer for disposal under the applicable conditions.

# 13 Accessories for Liquiphant Density

The accessories currently available for the product can be selected at www.endress.com:

1. Select the product using the filters and search field.
2. Open the product page.
3. Select **Spare parts & Accessories**.

The accessories can be partially ordered via the "Accessory enclosed" product structure.

## 13.1 Device Viewer

All the spare parts for the device, along with the order code, are listed in the *Device Viewer* (www.endress.com/deviceviewer).

## 13.2 Weather protection cover for dual compartment housing, aluminum

The weather protection cover can be ordered together with the device via the "Accessory enclosed" product structure.

It is used to protect against direct sunlight, precipitation and ice.

The 316L weather protection cover is suitable for dual compartment housings made of aluminum. The delivery includes the holder for direct mounting on the housing.

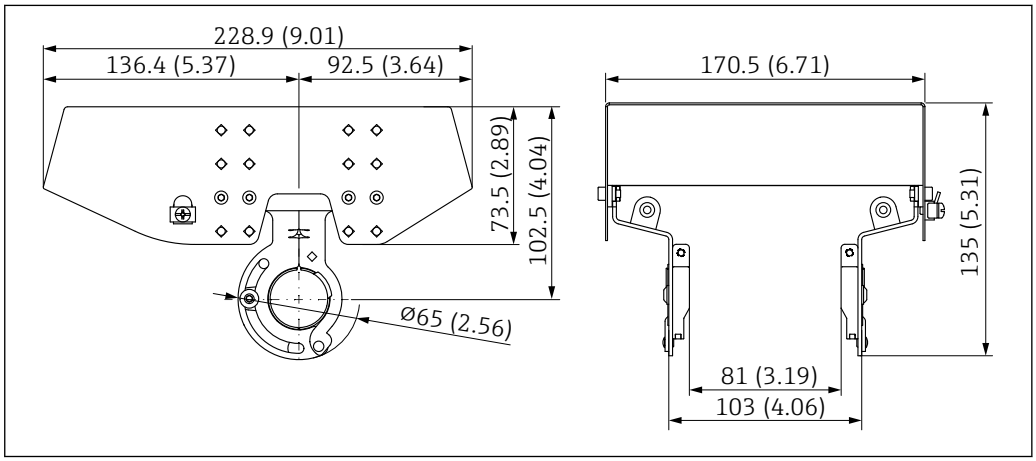


*23 Dimensions of weather protection cover, 316L, XW112. Unit of measurement mm (in)*

**Material**
- Weather protection cover: 316L
- Clamping screw: A4
- Bracket: 316L

**Accessory order code:**
71438303

Special Documentation SD02424F

## 13.3 Weather protection cover for aluminum single compartment housing

The weather protection cover can be ordered together with the device via the "Accessory enclosed" product structure.

It is used to protect against direct sunlight, precipitation and ice.

The plastic weather protection cover is suitable for the single compartment housing made of aluminum. The delivery includes the holder for direct mounting on the housing.

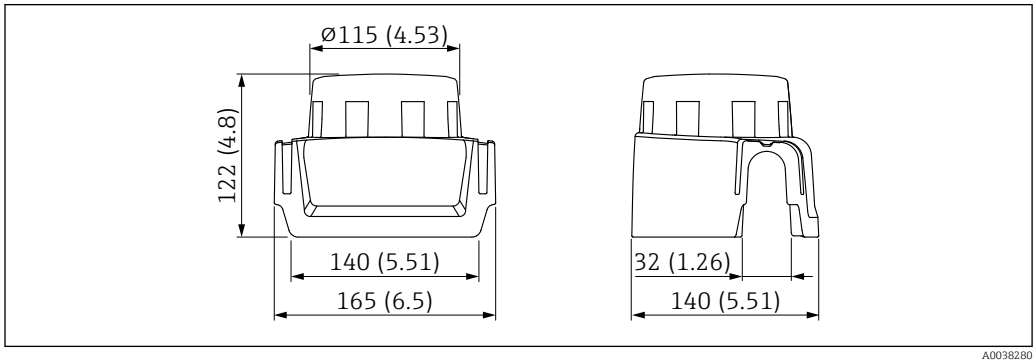


24 *Weather protection cover for aluminum single compartment housing. Unit of measurement mm (in)*

**Material**
Plastic

**Accessory order code:**
71438291

Special Documentation SD02423F

## 13.4 M12 socket

The M12 sockets listed are suitable for use in the temperature range −25 to 70 °C (−13 to 158 °F).

**M12 socket IP69**
- Terminated at one end
- Angled
- 5 m (16 ft) PVC cable (orange)
- Slotted nut 316L (1.4435)
- Body: PVC
- Order number: 52024216

**M12 socket IP67**
- Angled
- 5 m (16 ft) PVC cable (gray)
- Slotted nut Cu Sn/Ni
- Body: PUR
- Order number: 52010285

# 14 Technical data

## 14.1 Input

### 14.1.1 Measured variable

Density of liquids

### 14.1.2 Measuring range

Density range: 0.3 to 2 g/cm³

## 14.2 Output

**2-wire pulse (FEL60D) for density measurement**
Connection to Density Calculator QML51

### 14.2.1 Ex connection data

See safety instructions (XA): All data relating to explosion protection are provided in separate Ex documentation and are available from the Downloads area of the Endress+Hauser website. The Ex documentation is supplied as standard with all devices approved for use in explosion hazardous areas.

Ex versions require an Ex barrier or active barrier (e.g. RN22 from Endress+Hauser), for connection to the QML51.

## 14.3 Environment

### 14.3.1 Ambient temperature range

−40 to 70 °C (−40 to 158 °F)

The minimum permitted ambient temperature of the plastic housing is limited to −20 °C (−4 °F); 'indoor use' applies to North America.

Outdoor operation in strong sunlight:
- Mount the device in a shaded location
- Avoid direct sunlight, particularly in warmer climatic regions
- Use a weather protection cover, which can be ordered as an accessory

Further information on using the device in hazardous areas and on documentation that is currently available can be found on the Endress+Hauser website: www.endress.com → Downloads.

**Hazardous area**
In the hazardous area, the permitted ambient temperature can be limited depending on the zones and gas groups. Pay attention to the information in the Ex documentation (XA).

### 14.3.2 Operating altitude

As per IEC 61010-1 Ed.3:
- Up to 2 000 m (6 600 ft) above sea level
- Can be extended to 3 000 m (9 800 ft) above sea level if overvoltage protection is used

### 14.3.3 Climate class

As per IEC 60068-2-38 test Z/AD

### 14.3.4 Degree of protection

Testing according to IEC 60529 and NEMA 250

IP68 test condition: 1.83 m $H_2O$ for 24 h

**Housing**
See cable entries

**Cable entries**
- M20 coupling, plastic, IP66/68 NEMA Type 4X/6P
- M20 coupling, nickel-plated brass, IP66/68 NEMA Type 4X/6P
- M20 coupling, 316L, IP66/68 NEMA Type 4X/6P
- M20 coupling, 316L, hygienic, IP66/68/69 NEMA Type 4X/6P
- M20 thread, IP66/68 NEMA Type 4X/6P
- G ½ thread, NPT ½, NPT ¾ IP66/68 NEMA Type 4X/6P

Degree of protection for M12 plug
- When housing is closed and connection cable is plugged in: IP66/67 NEMA Type 4X
- When housing is open or connection cable is not plugged in: IP20, NEMA Type 1

NOTICE

**M12 plug: Loss of IP protection class due to incorrect installation!**
- ▶ The degree of protection only applies if the connecting cable used is plugged in and screwed tight.
- ▶ The degree of protection only applies if the connecting cable used is specified according to IP67 NEMA Type 4X.

If the "M12 plug" option is selected as the electrical connection, **IP66/67 NEMA Type 4X** applies for all housing types.

### 14.3.5 Pollution degree

Pollution degree 2

## 14.4 Process

### 14.4.1 Process temperature range

0 to 80 °C (32 to 176 °F)

### 14.4.2 Thermal shock

≤ 120 K/s

### 14.4.3 Process pressure range

−1 to 25 bar (−14.5 to 362.5 psi) for a maximum of 150 °C (302 °F)

The maximum pressure for the device depends on the lowest-rated element with regard to pressure.

Components are: process connection, optional mounting parts, or accessories.

**WARNING**

**Incorrect design or use of the device may lead to bursting parts!**
This may result in severe, possibly irreversible injury to persons and environmental hazards.

- Only operate the device within the specified limits for the components!
- MWP (maximum working pressure): The maximum working pressure is specified on the nameplate. This value refers to a reference temperature of 20 °C (68 °F) and may be present at the device for an unlimited time. Note temperature dependency of MWP. For higher temperatures, refer to the following standards for the permitted pressure values for flanges:EN 1092-1 (materials 1.4435 and 1.4404 are identical with regard to their stability/temperature property and are grouped together in under 13E0 in EN 1092-1 Tab. 18. The chemical composition of the two materials can be identical), ASME B 16.5a, JIS B 2220 (the latest version of the standard applies in each case).
- The Pressure Equipment Directive (2014/68/EU) uses the abbreviation "PS". The abbreviation "PS" corresponds to the maximum working pressure (MWP) of the device
- MWP data that deviate from this is provided in the relevant sections of the Technical Information.

The lowest value from the derating curves of the device and of the selected flange applies in each case.

Devices with CRN approval: Information on the Endress+Hauser website: www.endress.com → Downloads.

### 14.4.4 Pressure tightness

Up to vacuum

## 14.5 Additional technical data

Current Technical Information: Endress+Hauser website: www.endress.com → Downloads.

# Index


## A
About this document
  Symbols – description . . . . . 5

## C
CE mark . . . . . 9

## D
Declaration of Conformity . . . . . 9
Disposal . . . . . 32
Document
  Function . . . . . 5
Document function . . . . . 5

## E
Electrical connection
  Terminal assignment . . . . . 22

## F
Field of application
  Residual risks . . . . . 8

## I
Installation
  Installation requirements . . . . . 13
Intended use . . . . . 7

## O
Operational safety . . . . . 8

## P
Post-connection check . . . . . 26
Product description
  Product design . . . . . 9
Product safety . . . . . 9

## R
Repair concept . . . . . 31
Requirements for personnel . . . . . 7
Return . . . . . 32

## S
Securing screw . . . . . 22
Spare parts . . . . . 32
Symbols for certain types of information and graphics . 5
Symbols in graphics . . . . . 6

## T
Technical data
  Measured variables
    Measuring ranges . . . . . 35
  Process range . . . . . 36
Transport
  Handling
    Protecting the coating . . . . . 13

## U
Use of the device
  see Intended use
Using the devices
  Borderline cases . . . . . 8
  Incorrect use . . . . . 8

## W
Workplace safety . . . . . 8

71783292

www.addresses.endress.com

Endress+Hauser

People for Process Automation