BA00257R/09/EN/08.26-00
71789099
2026-10-15

Valid as of version
01.02 (device version)

Operating Instructions
iTEMP TMT84

Temperature transmitter

Endress+Hauser
People for Process Automation

Table of contents

1 About this document 4
1.1 Document function 4
1.2 Safety instructions (XA) 4
1.3 Symbols 4
1.4 Tool symbols 6
1.5 Documentation 6
1.6 Change history 7
1.7 Registered trademarks 7

2 Safety requirements 8
2.1 Requirements for the personnel 8
2.2 Intended use 8
2.3 Workplace safety 8
2.4 Operational safety 8
2.5 Operational safety 9
2.6 Product safety 9
2.7 IT security 9

3 Incoming acceptance and product identification 10
3.1 Incoming acceptance 10
3.2 Product identification 10
3.3 Storage and transport 11

4 Installation 12
4.1 Installation requirements 12
4.2 Installing the device 12
4.3 Post-installation check 16

5 Electrical connection 17
5.1 Connecting requirements 17
5.2 Connecting the device 17
5.3 Ensuring the degree of protection 23
5.4 Post-connection check 24

6 Operation options 25
6.1 Overview of operation options 25
6.2 Measured value display and operating elements 26
6.3 Access to the operating menu via the operating tool 29

7 System integration 31
7.1 Current device description files 31
7.2 Integrating the device into a system 31

8 Commissioning 38
8.1 Function check 38
8.2 Switching on the device 38
8.3 Configuring the device 38
8.4 Unlocking write protection 38

9 Diagnostics and troubleshooting . . . 40
9.1 General troubleshooting 40
9.2 Diagnostic information via communication interface 41
9.3 Overview of diagnostic information 43
9.4 Diagnostic list 44
9.5 Corrosion monitoring 47
9.6 Application errors without messages 48

10 Maintenance 49
10.1 Maintenance work 49
10.2 Cleaning of surfaces not in contact with the medium 49

11 Repair 50
11.1 General information 50
11.2 Spare parts 50
11.3 Return 50
11.4 Disposal 50

12 Accessories 50
12.1 Device-specific accessories 51
12.2 Communication-specific accessories 51
12.3 Service-specific accessories 52
12.4 Online tools 52

13 Technical data 53
13.1 Input 53
13.2 Output 54
13.3 Power supply 55
13.4 Performance characteristics 56
13.5 Environment 62
13.6 Mechanical construction 63
13.7 Certificates and approvals 67
13.8 Supplementary documentation 67

14 Operation using PROFIBUS® PA 68
14.1 Operating structure 68
14.2 Standard setup 68
14.3 Setup Expert 79
14.4 Slot/Index lists 98

Index 107

1 About this document

1.1 Document function

These Operating Instructions contain all the information required in the various life cycle phases of the device: from product identification, incoming acceptance and storage, to installation, connection, operation and commissioning, through to troubleshooting, maintenance and disposal.

1.2 Safety instructions (XA)

When used in hazardous areas, compliance with national regulations is mandatory. Separate Ex-specific documentation is provided for measuring systems that are used in hazardous areas. This documentation is an integral part of these Operating Instructions. The installation specifications, connection data and safety instructions contained therein must be strictly observed. Make sure that you use the right Ex-specific documentation for the right device with approval for use in hazardous areas! The number of the specific Ex documentation (XA...) is provided on the nameplate. If the two numbers (on the Ex documentation and the nameplate) are identical, then you may use this Ex-specific documentation.

1.3 Symbols

1.3.1 Safety symbols

⚠ DANGER
This symbol alerts you to a dangerous situation. Failure to avoid this situation will result in serious or fatal injury.

⚠ WARNING
This symbol alerts you to a potentially dangerous situation. Failure to avoid this situation can result in serious or fatal injury.

⚠ CAUTION
This symbol alerts you to a potentially dangerous situation. Failure to avoid this situation can result in minor or medium injury.

NOTICE
This symbol alerts you to a potentially harmful situation. Failure to avoid this situation can result in damage to the product or something in its vicinity.

1.3.2 Electrical symbols

Symbol	Meaning
⎓	Direct current
∼	Alternating current
≂	Direct current and alternating current

Symbol	Meaning
⏚	**Ground connection** A grounded terminal which, as far as the operator is concerned, is grounded via a grounding system.
⏚	**Protective earth (PE)** Ground terminals that must be connected to ground prior to establishing any other connections. The ground terminals are located on the interior and exterior of the device: ▪ Interior ground terminal: potential equalization connection is connected to the supply network. ▪ Exterior ground terminal: the device is connected to the plant grounding system.

1.3.3 Symbols for certain types of information

Symbol	Meaning
✓	**Permitted** Procedures, processes or actions that are permitted.
✓✓	**Preferred** Procedures, processes or actions that are preferred.
✗	**Forbidden** Procedures, processes or actions that are forbidden.
i	**Tip** Indicates additional information.
	Reference to documentation
	Reference to page
	Reference to graphic
▶	Notice or individual step to be observed
1., 2., 3....	Series of steps
↳	Result of a step
?	Help in the event of a problem
	Visual inspection

1.3.4 Symbols in graphics

Symbol	Meaning	Symbol	Meaning
1, 2, 3,...	Item numbers	1., 2., 3....	Series of steps
A, B, C, ...	Views	A-A, B-B, C-C, ...	Sections
EX	Hazardous area	EX	Safe area (non-hazardous area)

1.4 Tool symbols

Symbol	Meaning
A0011220	Flat-blade screwdriver
A0011219	Phillips head screwdriver
A0011221	Allen key
A0011222	Open-ended wrench
A0013442	Torx screwdriver

1.5 Documentation

For an overview of the scope of the associated Technical Documentation, refer to the following:

- *Device Viewer* (www.endress.com/deviceviewer): Enter the serial number from the nameplate
- *Endress+Hauser Operations App*: Enter the serial number from the nameplate or scan the matrix code/QR code on the nameplate

The following document types are available in the Downloads area of the Endress+Hauser website (www.endress.com/downloads), depending on the device version:

Document type	Purpose and content of the document
Technical Information (TI)	**Planning aid** This document contains all the technical data on the product and provides an overview of everything that can be ordered with the product.
Brief Operating Instructions (KA)	The Brief Operating Instructions contain basic safety instructions, installation and connection conditions. They do not replace the Operating Instructions.
Operating Instructions (BA)	**Reference document** The Operating Instructions contain the information that is required in the various phases of the life cycle of the product: From product identification, incoming acceptance and storage, to installation, connection, operation and commissioning through to troubleshooting, maintenance and disposal.
Description of device parameters (GP)	**Reference for parameters** The document contains detailed explanations of readable or configurable parameters in the product. The description is aimed at those who work with the product over its entire life cycle and perform specific configurations.
Safety instructions (XA)	Safety Instructions for electrical equipment in hazardous areas are supplied with the product depending on the approval. They are an integral part of the Operating Instructions. The nameplate indicates the Safety Instructions (XA) that are relevant to the product.
Supplementary device-dependent documentation (SD/CY/ FY)	Always comply strictly with the instructions in the relevant supplementary documentation. The supplementary documentation is an integral part of the product documentation.

1.6 Change history

Revision history

The firmware version (FW) on the nameplate and in the Operating Instructions indicates the device release: XX.YY.ZZ (example 01.02.01).

XX	Change to main version. No longer compatible. The device and Operating Instructions change.
YY	Change to functions and operation. Compatible. The Operating Instructions change.
ZZ	Fixes and internal changes. No changes to the Operating Instructions.

Date	Firmware version	Software modifications	Documentation	Material number
07.2018	01.00.zz	Original firmware	BA257R	71076270
06.2011	01.01.zz	Update to PROFIBUS Profile 3.02	BA257R	71137263
08.2011	01.01.zz	-	BA257R	71137263
09.2012	01.01.zz	-	BA257R	71192570
03.2017	01.01.zz	-	BA257R	71357863
03.2020	01.01.zz	-	BA257R	71496984
05.2022	01.01.zz	-	BA257R	71567158
03.2026	01.01.zz	-	BA257R	71757394

1.7 Registered trademarks

PROFIBUS®

PROFIBUS and the associated trademarks (The Association Trademark, the Technology Trademarks, the Certification Trademark and the Certified by PI Trademark) are registered trademarks of the PROFIBUS User Organization e.V. (Profibus User Organization), Karlsruhe - Germany

2 Safety requirements

2.1 Requirements for the personnel

The personnel for installation, commissioning, diagnostics and maintenance must fulfill the following requirements:
- Trained, qualified specialists must have a relevant qualification for this specific function and task.
- Are authorized by the plant owner/operator.
- Are familiar with federal/national regulations.
- Before starting work, read and understand the instructions in the manual and supplementary documentation as well as the certificates (depending on the application).
- Follow instructions and comply with basic conditions.

The operating personnel must fulfill the following requirements:
- Are instructed and authorized according to the requirements of the task by the facility's owner-operator.
- Follow the instructions in this manual.

2.2 Intended use

The device is a universal and user-configurable temperature transmitter with either one or two sensor inputs for a resistance thermometer (RTD), thermocouples (TC), resistance and voltage transmitters. The head transmitter version of the device is intended for mounting in a terminal head (flat face) as per DIN EN 50446. It is also possible to mount the device on a DIN rail using the optional DIN rail clip.

If the equipment is used in a manner not specified by the manufacturer, the protection provided by the equipment will be impaired.

The manufacturer is not liable for harm caused by improper or non-designated use.

Do not operate the head transmitter as a DIN rail substitute in a cabinet by using the DIN rail clip with remote sensors.

2.3 Workplace safety

For work on and with the device:
- Wear the required personal protective equipment according to federal/national regulations.

2.4 Operational safety

NOTICE

Damage to the device!
- Operate the device only if it is in proper technical condition, free from errors and faults.
- The operator is responsible for interference-free operation of the device.

Modifications to the device

Unauthorized modifications to the device are not permitted and can lead to unforeseeable dangers!
- If modifications are nevertheless required, consult with the manufacturer.

Repair

To ensure continued operational safety and reliability:
- Carry out repairs on the device only if they are expressly permitted.

- Observe national regulations pertaining to the repair of an electrical device.
- Use only original spare parts and accessories.

2.5 Operational safety

Damage to the device!
- Operate the device only if it is in proper technical condition, free from errors and faults.
- The operator is responsible for trouble-free operation of the device.

Hazardous area

To eliminate a danger for persons or for the facility when the device is used in the hazardous area (explosion protection or safety instrumented system):
- Based on the technical data on the nameplate, check whether the ordered device is permitted for the intended use in the hazardous area. The nameplate can be found on the side of the transmitter housing.
- Comply with the instructions in the separate supplementary documentation, which is an integral part of this manual.

Modifications to the device

Unauthorized modifications to the device are not permitted and can lead to unforeseeable dangers!
- If modifications are nevertheless required, consult with the manufacturer.

Repair

To ensure continued operational safety and reliability:
- Carry out repairs on the device only if they are expressly permitted.
- Observe national regulations pertaining to the repair of an electrical device.
- Use only original spare parts and accessories.

Device safety and electromagnetic compatibility
The measuring system complies with the general safety requirements as per EN 61010-1, the EMC requirements as per the IEC/EN 61326 series and the NAMUR recommendation NE 21.

2.6 Product safety

This state-of-the-art device is designed and tested in accordance with good engineering practice to meet operational safety standards. It left the factory in a condition in which it is safe to operate.

It meets general safety standards and legal requirements. It also complies with the EU directives listed in the device-specific EU declaration of conformity. The manufacturer confirms this by affixing the CE mark.

2.7 IT security

The manufacturer warranty is valid only if the product is installed and used as described in the Operating Instructions. The product is equipped with security mechanisms to protect it against any inadvertent changes to the settings.

IT security measures, which provide additional protection for the product and associated data transfer, must be implemented by the operators themselves in line with their security standards.

3 Incoming acceptance and product identification

3.1 Incoming acceptance

On receipt of the delivery:

1. Check the packaging for damage.
   ↳ Report all damage immediately to the manufacturer.
   Do not install damaged components.
2. Check the scope of delivery using the delivery note.
3. Compare the data on the nameplate with the order specifications on the delivery note.
4. Check the technical documentation and all other necessary documents, e.g. certificates, to ensure they are complete.

If one of the conditions is not satisfied, contact the manufacturer.

3.2 Product identification

The following options are available for identification of the device:
- Nameplate specifications
- Enter the serial number from the nameplate into *Device Viewer* (www.endress.com/deviceviewer): all the information about the device and an overview of the technical documentation supplied with the device are displayed.
- Enter the serial number from the nameplate into the *Endress+Hauser Operations app* or scan the 2-D matrix code (QR code) on the nameplate with the *Endress+Hauser Operations app*: all the information about the device and the technical documentation pertaining to the device is displayed.

3.2.1 Nameplate

Do you have the correct device?

The nameplate provides you with the following information on the device:
- Manufacturer identification, device designation
- Order code
- Extended order code
- Serial number
- Tag name (TAG) (optional)
- Technical values such as supply voltage, current consumption, ambient temperature, communication-specific data (optional)
- Degree of protection
- Approvals with symbols
- Reference to Safety Instructions (XA) (optional)

▶ Compare the information on the nameplate with the order.

3.2.2 Name and address of manufacturer

Name of manufacturer:	Endress+Hauser Wetzer GmbH + Co. KG
Address of manufacturer:	Obere Wank 1, D-87484 Nesselwang or www.endress.com

3.3 Storage and transport

Storage temperature

Head transmitter	−40 to 100 °C (−40 to 212 °F)

Maximum relative humidity: < 95 % as per IEC 60068-2-30

Pack the device for storage and transportation in such a way that it is reliably protected against impact and external influences. The original packaging offers the best protection.

Avoid the following environmental influences during storage:
- Direct sunlight
- Vibration
- Aggressive media

4 Installation

4.1 Installation requirements

4.1.1 Dimensions

See "Technical data" section → 🗎 53 .

4.1.2 Installation location

- in the terminal head, flat face, as per DIN EN 50446, direct installation on insert with cable entry (middle hole 7 mm)
- In the field housing, separated from the process (see "Accessories" section → 🗎 50)

It is also possible to mount the head transmitter on a DIN rail as per IEC 60715 using the DIN rail clip accessory (see "Accessories" section → 🗎 50).

Information about the conditions (such as the ambient temperature, degree of protection, climate class) that must be present at the mounting location so that the device can be mounted correctly is provided in the "Technical data" section → 🗎 53.

For use in hazardous areas, the limit values specified on the certificates and approvals must be observed (see Ex Safety Instructions).

4.2 Installing the device

A Phillips head screwdriver is required to mount the device:
- Maximum torque for securing screws = 1 Nm (¾ lbf ft), screwdriver: Pozidriv Z2
- Maximum torque for screw terminals = 0.35 Nm (¼ lbf ft), screwdriver: Pozidriv Z1

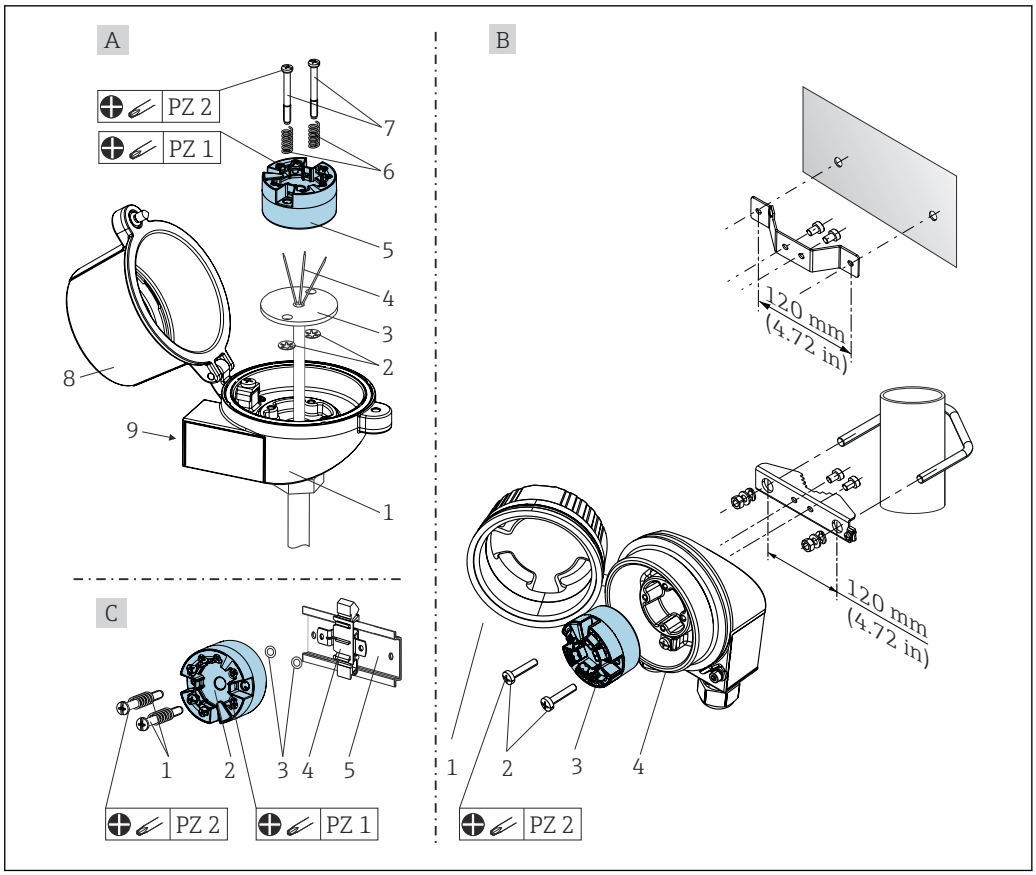

1 Head transmitter mounting (three versions)

Pos. A	Mounting in a terminal head (terminal head flat face as per DIN 43729)
1	Terminal head
2	Retaining rings
3	Insert
4	Connection wires
5	Head transmitter
6	Mounting springs
7	Mounting screws
8	Terminal head cover
9	Cable entry

Procedure for mounting in a terminal head, pos. A:

1. Open the terminal head cover (8) on the terminal head.
2. Guide the connection wires (4) of the insert (3) through the center hole in the head transmitter (5).
3. Fit the mounting springs (6) on the mounting screws (7).
4. Guide the mounting screws (7) through the side boreholes of the head transmitter and the insert (3). Then fix both mounting screws with the snap rings (2).
5. Then tighten the head transmitter (5) along with the insert (3) in the terminal head.
6. After wiring,→ 17 close the terminal head cover (8) tightly again.

Pos. B	Mounting in a field housing
1	Field housing cover
2	Mounting screws with springs
3	Head transmitter
4	Field housing

Procedure for mounting in a field housing, pos. B:

1. Open the cover (1) of the field housing (4).
2. Guide the mounting screws (2) through the lateral bores in the head transmitter (3).
3. Screw the head transmitter to the field housing.
4. After wiring, close the field housing cover (1) again.

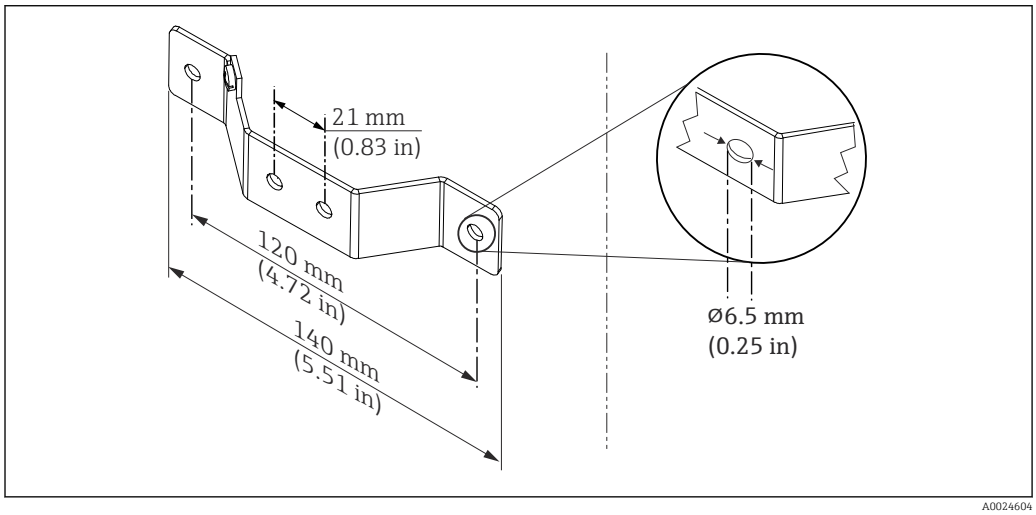

2 *Dimensions of angle bracket for wall mount (complete wall mounting set available as accessory)*

Pos. C	Mounting on DIN rail (DIN rail as per IEC 60715)
1	Mounting screws with springs
2	Head transmitter
3	Retaining rings
4	DIN rail clip
5	DIN rail

Procedure for mounting on a DIN rail, pos. C:

1. Press the DIN rail clip (4) onto the DIN rail (5) until it engages with a click.
2. Fit the mounting springs on the mounting screws (1) and guide the screws through the side boreholes of the head transmitter (2). Then fix both mounting screws with the snap rings (3).
3. Screw the head transmitter (2) onto the DIN rail clip (4).

4.2.1 Installation with central spring insert

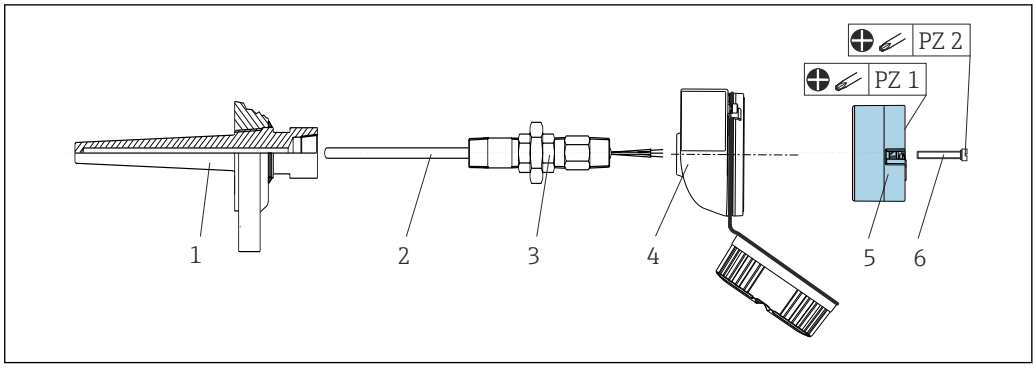

Thermometer design with thermocouples or RTD sensors and head transmitter:

1. Fit the thermowell (1) on the process pipe or the container wall. Secure the thermowell according to the instructions before the process pressure is applied.
2. Fit the necessary neck tube nipples and adapter (3) on the thermowell.
3. Make sure sealing rings are installed if such rings are needed for harsh environmental conditions or special regulations.
4. Guide the mounting screws (6) through the lateral bores of the head transmitter (5).
5. Position the head transmitter (5) in the terminal head (4) in such a way that the power supply (terminals 1 and 2) point to the cable entry.
6. Using a screwdriver, screw down the head transmitter (5) in the terminal head (4).
7. Guide the connection wires of the insert (3) through the lower cable entry of the terminal head (4) and through the middle hole in the head transmitter (5). Wire the connection wires up to the transmitter .
8. Screw the terminal head (4), with the integrated and wired head transmitter, onto the ready-mounted nipple and adapter (3).

NOTICE

Ensure that the terminal head cover is secured properly to meet the requirements for explosion protection.

- ▶ After wiring, securely screw the terminal head cover back on.

4.2.2 Mounting the display on the head transmitter

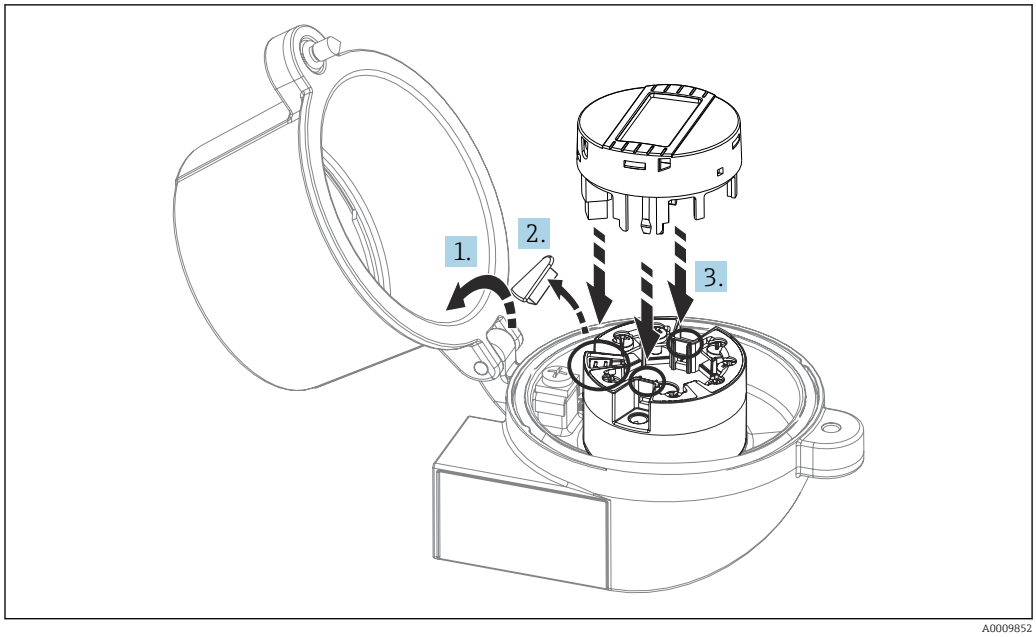

3 Mounting the display

1. Loosen the screw on the terminal head cover. Flip back the terminal head cover.
2. Remove the cover of the display connection area.
3. Fit the display module onto the mounted and wired head transmitter. The fastening pins must click securely into place on the head transmitter. After mounting, securely tighten the terminal head cover.

The display can be used only with the appropriate terminal heads - cover with viewing window.

4.3 Post-installation check

Perform the following checks after installing the device:

Device health and specifications	Notes
Is the device undamaged (visual check)?	-
Do the ambient conditions match the device specification (e.g. ambient temperature, measuring range, etc.)?	See "Technical data' section"→ 53

5 Electrical connection

CAUTION

- Switch off the power supply before installing or connecting the device. Failure to observe this may result in the destruction of parts of the electronics.
- When connecting Ex-certified devices, please take special note of the instructions and connection schematics in the Ex-specific supplement to these Operating Instructions. Contact the manufacturer if you have any questions.
- Do not occupy the display connection. An incorrect connection can destroy the electronics.
- Connect the potential matching line to the outer ground terminal before applying the power supply.

5.1 Connecting requirements

A Phillips head screwdriver is required to wire the head transmitter with screw terminals. The push-in terminal version can be wired without any tools.

Proceed as follows to wire a mounted head transmitter:

1. Open the cable gland and the housing cover on the terminal head or the field housing.
2. Feed the cables through the opening in the cable gland.
3. Connect the cables as shown in the following figure. If the head transmitter is fitted with push-in terminals, pay particular attention to the information in the "Connecting to push-in terminals" section.
4. Tighten the cable gland again and close the housing cover.

To avoid connection errors, follow the instructions in the post-connection check section before commissioning!

5.2 Connecting the device

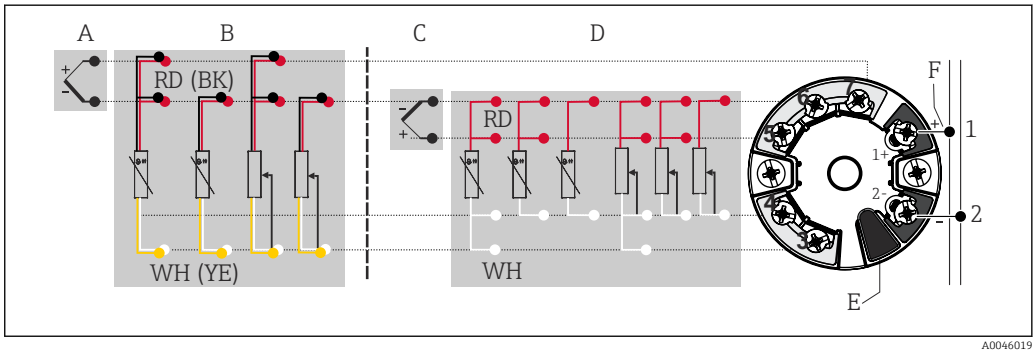

4 *Assignment of terminal connections for head transmitter*

A Sensor input 1, RTD and Ω, 4-, 3- and 2-wire
B Sensor input 1, TC and mV
C Sensor input 2, RTD and Ω, 3- and 2-wire
D Sensor input 2, TC and mV
E Display connection, service interface
F Bus connection and power supply

NOTICE

- ESD - Electrostatic discharge. Protect the terminals from electrostatic discharge. Failure to observe this may result in the destruction or malfunction of parts of the electronics.

5.2.1 Connecting the sensor cables

NOTICE

When connecting two sensors, ensure that there is no galvanic connection between the sensors (for example, caused by sensor elements that are not isolated from the thermowell). The resulting equalizing currents distort the measurements considerably.

- The sensors must remain galvanically isolated from one another by connecting each sensor separately to a transmitter. The transmitter provides sufficient galvanic isolation (> 2 kV AC) between the input and output.

The following connection combinations are possible when both sensor inputs are assigned:

		Sensor input 1			
		RTD or resistance transmitter, 2-wire	RTD or resistance transmitter, 3-wire	RTD or resistance transmitter, 4-wire	Thermocouple (TC), voltage transmitter
Sensor input 2	RTD or resistance transmitter, 2-wire	✔	✔	-	✔
	RTD or resistance transmitter, 3-wire	✔	✔	-	✔
	RTD or resistance transmitter, 4-wire	-	-	-	-
	Thermocouple (TC), voltage transmitter	✔	✔	✔	✔

Connecting the sensor to push-in terminals

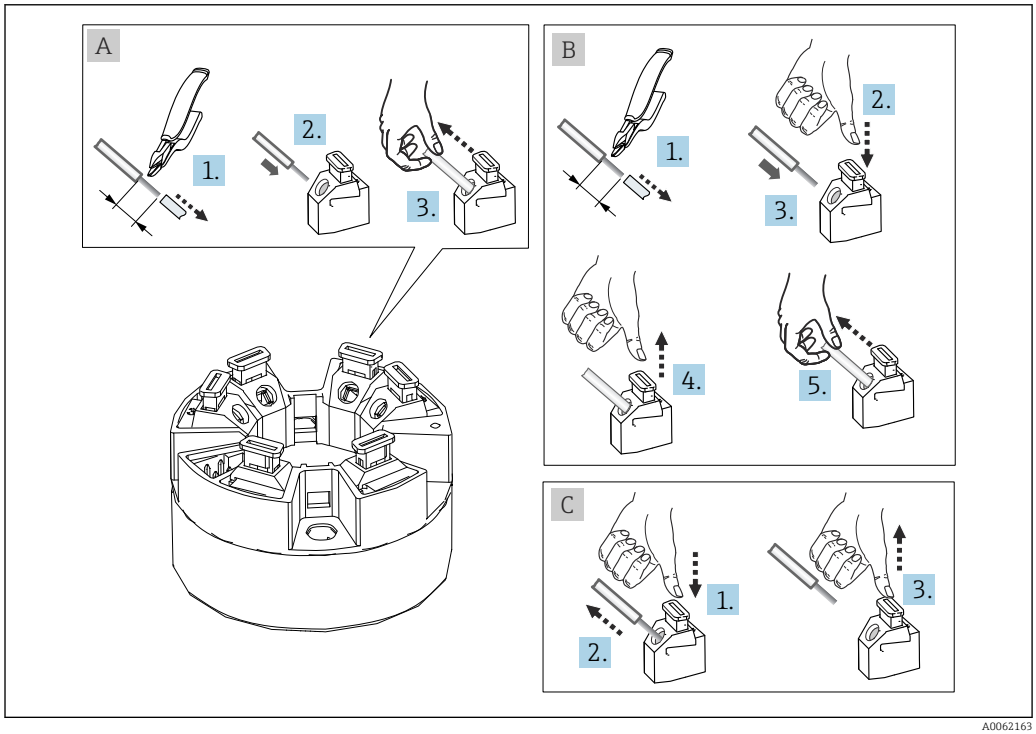

5 Push-in terminal connection, using the example of a head transmitter

Fig. A, solid wire, fine-strand wire with ferrule:

1. Strip wire end to length of at least 10 mm (0.39 in).
2. Insert the wire end into the terminal.

3. Pull the wire gently to ensure it is connected correctly. If the wire is not secure, repeat from step 1.

Fig. B, fine-strand wire without ferrule:

1. Strip wire end to length of at least 10 mm (0.39 in).
2. Press down on the lever opener.
3. Insert the wire end into the terminal.
4. Release lever opener.
5. Pull the wire gently to ensure it is connected correctly. If the wire is not secure, repeat from step 1.

Fig. C, releasing the connection:

1. Press down on the lever opener.
2. Remove the wire from the terminal.
3. Release lever opener.

5.2.2 PROFIBUS® PA cable specification

Cable type

Twin-core cables must be used for connecting the measuring instrument to the fieldbus. Following IEC 61158-2 (MBP), four different cable types (A, B, C, D) can be used with the fieldbus, only two of which (cable types A and B) are shielded.

- Specifically for new installations, use cable type A or B. Only these types have cable shielding that guarantees adequate protection from electromagnetic interference and thus the most reliable data transfer. In the case of cable type B, several fieldbuses (same degree of protection) may be operated in one cable. No other circuits are permissible in the same cable.
- Practical experience has shown that cable types C and D should not be used due to the lack of shielding, since the freedom from interference generally does not meet the requirements described in the standard.

The electrical data of the fieldbus cable have not been specified but determine important characteristics of the design of the fieldbus, such as distances bridged, number of users and electromagnetic compatibility.

	Type A	Type B
Cable structure	Twisted pair, shielded	One or more twisted pairs, fully shielded
Wire cross-section	0.8 mm^2 (18 in^2)	0.32 mm^2 (22 in^2)
Loop resistance (direct current)	44 Ω/km	112 Ω/km
Characteristic impedance at 31.25 kHz	100 Ω ±20 %	100 Ω ±30 %
Attenuation constant at 39 kHz	3 dB/km	5 dB/km
Capacitive asymmetry	2 nF/km	2 nF/km
Envelope delay distortion (7.9 to 39 kHz)	1.7 mS/km	*)
Shield coverage	90 %	*)
Max. cable length (incl. spurs > 1 m (3 ft)	1 900 m (6 233 ft)	1 200 m (3 937 ft)
*) Not specified		

Suitable fieldbus cables (type A) from various manufacturers for non-hazardous areas are listed below:
- Siemens: 6XV1 830-5BH10
- Belden: 3076F
- Kerpen: CeL-PE/OSCR/PVC/FRLA FB-02YS(ST)YFL

Maximum overall cable length

The maximum network expansion depends on the type of protection and the cable specifications. The overall cable length combines the length of the main cable and the length of all spurs (>1 m/3.28 ft). Note the following points:
- The maximum permissible overall cable length depends on the cable type used.
  - Type A: 1900 m (6200 ft)
  - Type B: 1200 m (4000 ft)
- If repeaters are used, the maximum permissible cable length is doubled! A maximum of three repeaters is permitted between the user and the master.

Maximum spur length

The line between the distribution box and field device is described as a spur. In the case of non-Ex applications, the max. length of a spur depends on the number of spurs (> 1 m (3.28 ft)):

Number of spurs	1 to 12	13 to 14	15 to 18	19 to 24	25 to 32
Max. length per spur	120 m (393 ft)	90 m (295 ft)	60 m (196 ft)	30 m (98 ft)	1 m (3.28 ft)

Number of field devices

In systems that meet FISCO with Ex ia types of protection, the line length is limited to max. 1000 m (3280 ft). A maximum of 32 users per segment in non-Ex areas or a maximum of 10 users in an Ex-area (Ex ia IIC) is possible. The actual number of users must be determined during the planning stage.

Shielding and grounding

Observe the specifications of the PROFIBUS User Organization for device installation when establishing the electrical connection.

Bus termination

Always terminate the start and end of each fieldbus segment with a bus terminator. With various junction boxes (non-Ex), the bus termination can be activated via a switch. If this is not the case, a separate bus terminator must be installed. Please note the following:

- In the case of a branched bus segment, the device furthest from the segment coupler represents the end of the bus.
- If the fieldbus is extended with a repeater, the extension must also be terminated at both ends.

Further Information

General information and further details about the wiring can be found in the Operating Instructions "Guidelines for planning and commissioning, PROFIBUS ® DP/PA, Field communication" (BA00034S).

5.2.3 Fieldbus connection

Devices are connected to the fieldbus in two ways:

- Using a conventional cable gland → 📄 21
- Using the fieldbus connector (optional, available as an accessory) → 📄 21

Risk of damage

- Switch off the power supply before installing or connecting the head transmitter. Failure to observe this may result in the destruction of parts of the electronics.
- Establish grounding via one of the grounding screws on the terminal head or the field housing.
- If the shielding of the fieldbus cable is grounded at more than one point in systems without additional potential equalization, mains-frequency equalizing currents may occur and cause damage to the cable or shielding. In such cases, the shielding of the fieldbus cable is to be grounded on one side only; it must not be connected to the ground terminal of the housing on the terminal head or the field housing. Insulate the shield that is not connected.
- We recommend that the fieldbus not be looped using conventional cable glands. Even if one measuring instrument is replaced at a later date, bus communication will have to be interrupted.

Cable gland or cable entry

Follow the general procedure. → 📄 17

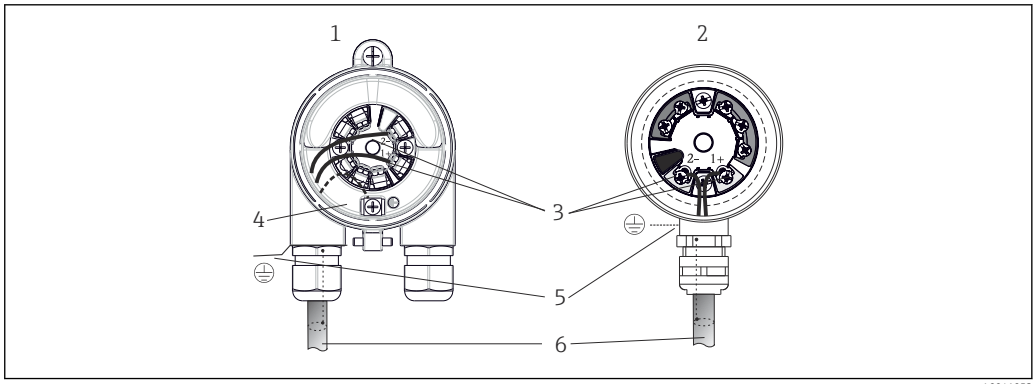

6 Connecting the signal cables and power supply

1 *Head transmitter installed in field housing*
2 *Head transmitter installed in terminal head*
3 *Terminals for fieldbus communication and power supply*
4 *Internal ground connection*
5 *External ground connection*
6 *Shielded fieldbus cable*

- The terminals for the fieldbus connection (1+ and 2-) are independent of polarity.
- Conductor cross-section:
  - Max. 2.5 mm² (0.004 in²) for screw terminals
  - Max. 1.5 mm² (0.002 in²) for push-in-terminals. Min. stripping length of cable 10 mm (0.39 in).
- A shielded cable must be used.

Fieldbus connector

As an option, a fieldbus connector can be screwed into the terminal head or field housing instead of a cable gland. Fieldbus connectors can be ordered as an accessory (→ 📄 50).

The connection technology of PROFIBUS® PA allows fieldbus connection via uniform mechanical connections, e.g., T-boxes, distribution modules.

This connection technology using prefabricated distribution modules and plug-in connectors offers substantial advantages over conventional wiring:

- Field devices can be removed, replaced or added at any time during normal operation. Communication is not interrupted.
- Installation and maintenance are significantly easier.
- Existing cable infrastructures can be used and expanded instantly, for example when constructing new star distributors using 4-channel or 8-channel distribution modules.

The device can therefore be ordered with the option of a ready-mounted fieldbus connector, or can be ordered as a spare part for subsequent mounting. → 📄 50

Supply line/T-box shielding

- Do not interrupt the shielding of the PA cable.
- Always keep the shielding connection as short as possible.

Use cable glands with Iris springs to connect the shield. The shielding is connected to the T-box housing by means of the Iris spring located inside the gland. The shielding braid is located under the Iris spring. When the armored thread is tightened, the Iris spring is pressed against the shielding, thereby creating a conductive connection between the shielding and the metal housing.

A terminal box or a plug-in connection must be considered part of the shielding (Faraday shield). This is particularly true for separate boxes if they are connected to a PROFIBUS® PA device with a plug-in cable. In this case, a metal connector must be used whereby the cable shielding is connected to the connector housing (e.g., preterminated cables).

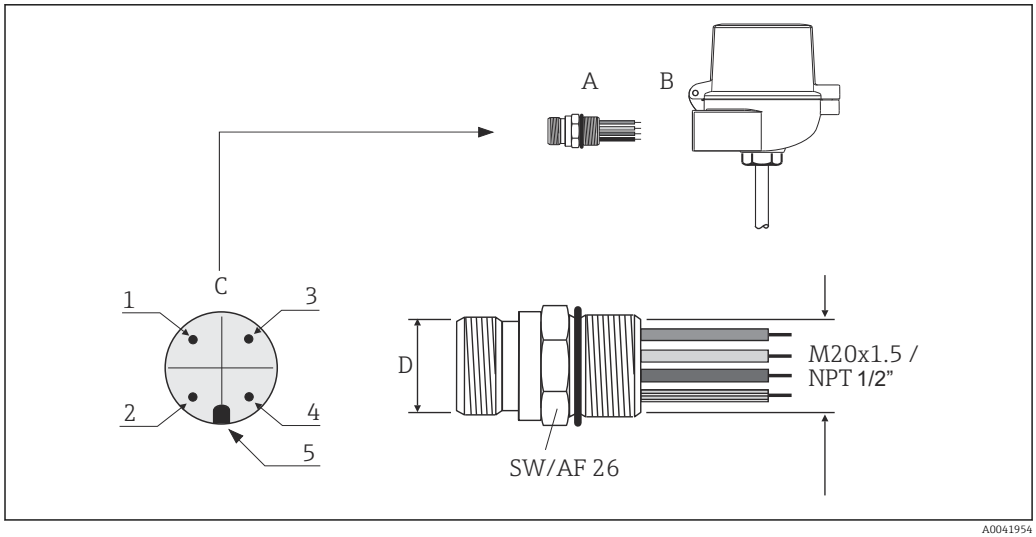

7 Connectors for connection to the PROFIBUS® PA fieldbus

		Pin assignment / color codes			
		D	**7/8" connector:**	**D**	**M12 connector:**
A	Fieldbus connector	1	Brown wire: PA+ (terminal 1)	1	Gray wire: shield
B	Terminal head	2	Green-yellow wire: ground	2	Brown wire: PA+ (terminal 1)
C	Connector on housing (male)	3	Blue wire: PA- (terminal 2)	3	Blue wire: PA- (terminal 2)
		4	Gray wire: shield	4	Green-yellow wire: ground
		5	Positioning key	5	Positioning key

Connector technical data:

Wire cross-section	4 x 0.8 mm
Connection thread	M20 x 1.5 / NPT ½"
Degree of protection	IP 67 according to DIN 40 050 IEC 529
Contact plating	CuZn, gold-plated
Housing material	1.4401 (316)
Flammability	V - 2 according to UL - 94
Ambient temperature	−40 to +105 °C (−40 to +221 °F)
Current carrying capacity	9 A
Rated voltage	Max. 600 V
Contact resistance	≤ 5 mΩ
Insulation resistance	≥ 10 mΩ

5.3 Ensuring the degree of protection

The device meets the requirements for IP67 protection. Compliance with the following points is mandatory following installation in the field or servicing in order to ensure that IP67 protection is maintained:

1. The transmitter must be mounted in a terminal head with the appropriate degree of protection.
   The housing seals must be clean and undamaged when inserted into the sealing groove. Dry, clean or replace the seals for this purpose if necessary.
2. The connecting cables used must have the specified external diameter (e.g., M20x1.5, cable diameter 8 to 12 mm).
   Firmly tighten the cable gland. → 8, 23
3. The cables must loop down before they enter the cable glands ("water trap").
   ↳ This means that any moisture that may form cannot enter the gland.
4. Install the device in such a way that the cable glands are not facing upwards. → 8, 23
5. Replace unused cable glands with dummy plugs.
6. The grommet used must remain in the cable gland.

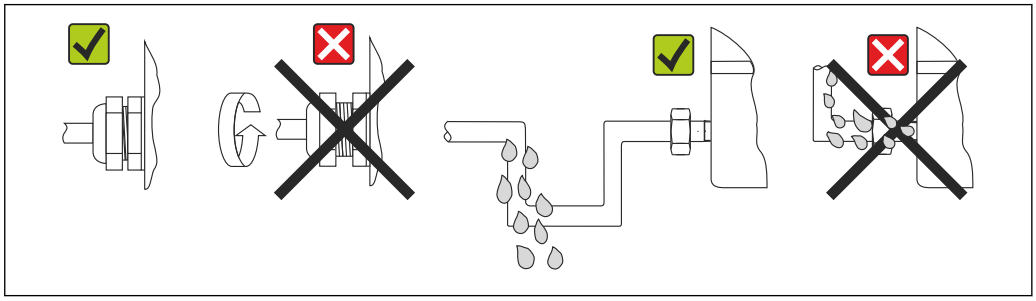

8 *Connection tips to retain IP67 protection*

5.4 Post-connection check

Device condition and specifications	Notes
Are the device and cables free from damage (visual check)?	--
Electrical connection	**Notes**
Does the supply voltage match the specifications on the nameplate?	9 to 32 V_{DC}
Do the cables used meet the required specifications?	Fieldbus cable, → 🗎 19 Sensor cable, → 🗎 18
Do the cables have adequate strain relief?	--
Are the power supply and signal cables connected correctly?	→ 🗎 17
Are all the screw terminals firmly tightened and have the push-in terminal connections been checked?	
Are all the cable entries installed, tightened and leak-tight? Cable run with "water trap"?	--
Are all the housing covers installed and firmly tightened?	--
Electrical connection of the fieldbus system	**Notes**
Are all the connecting components (T-boxes, junction boxes, connectors, etc.) connected with each other correctly?	--
Has each fieldbus segment been terminated at both ends with a bus terminator?	--
Has the max. length of the fieldbus cable been observed in accordance with the fieldbus specifications?	→ 🗎 19
Has the max. length of the spurs been observed in accordance with the fieldbus specifications?	
Is the fieldbus cable fully shielded and correctly grounded?	

6 Operation options

6.1 Overview of operation options

There are different options available for configuring and commissioning the device:

1. Configuration programs

Profile parameters and device-specific parameters are configured exclusively via the fieldbus interface. There are configuration and operating programs from different manufacturers available for this purpose.

2. Miniature switches (DIP switches) for various hardware settings, optional
→ 26

The following hardware settings for the PROFIBUS® PA interface can be made using DIP switches on the rear of the optional display:

- Entry of the device bus address
- Switching the hardware write protection on/off
- Switching (rotating) the display by 180 °

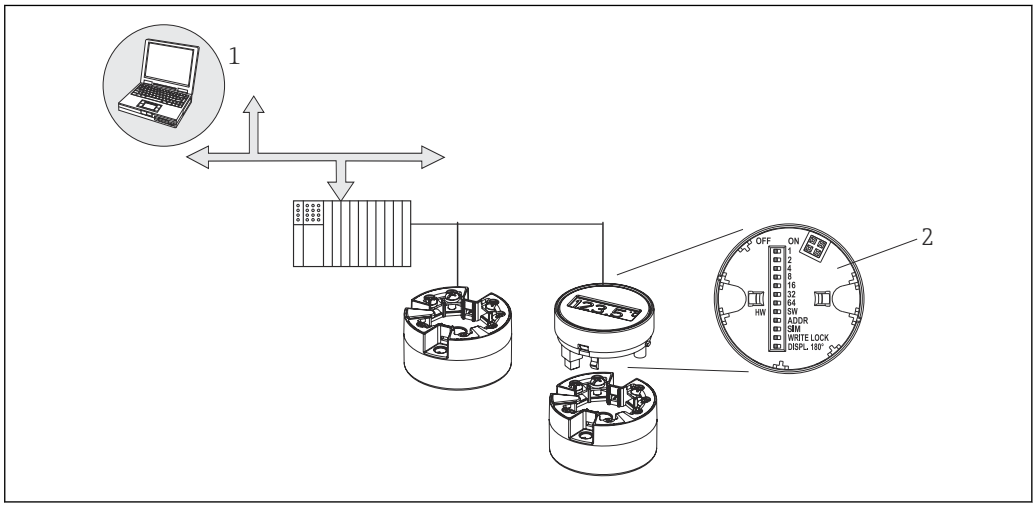

9 *Operation options*

1 *Configuration/operating programs for operation via PROFIBUS® PA (fieldbus functions, device parameters)*
2 *DIP switches for hardware settings on the rear of the optional display (write protection, device address, switch display)*

For the device, display and operating elements are available locally only if the device was ordered with a display unit.

6.2 Measured value display and operating elements

6.2.1 Display elements

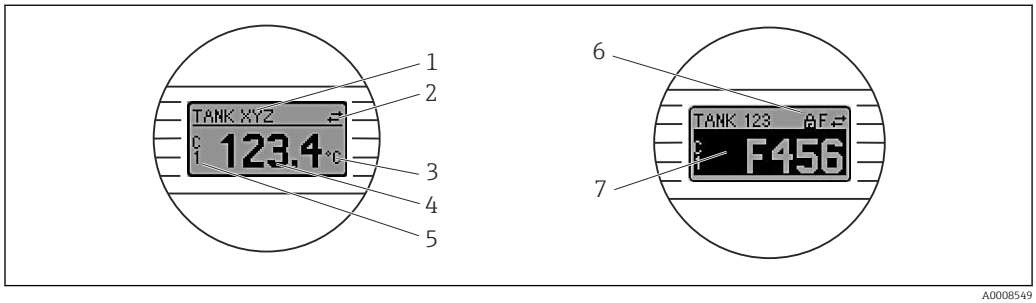

10 Optional LC display for head transmitter

Item no.	Function	Description
1	Displays the TAG	TAG, 32 characters long.
2	'Communication' symbol	The communication symbol appears when read and write-accessing via the fieldbus protocol.
3	Unit display	Unit display for the measured value displayed.
4	Measured value display	Displays the current measured value.
5	Value/channel display C1 or C2, P1, S1 or P2, S2, RJ	E.g., C1 for a measured value from channel 1. (S = Secondary value, P = Primary value; C = Channel, RJ = Reference junction)
6	'Configuration locked' symbol	The 'configuration locked' symbol appears when configuration is locked via the hardware.
7	Status signals	
	Symbols	Meaning
	F	**Error message "Failure detected"** An operating error has occurred. The measured value is no longer valid. The display alternates between the error message and "- - - -" (no valid measured value present); see "Diagnostics and troubleshooting" section → 40 Detailed information on the error messages can be found in the Operating Instructions.
	C	**"Service mode"** The device is in the service mode (e.g., during a simulation).
	S	**"Out of specification"** The device is being operated outside its technical specifications (e.g., during startup or cleaning processes).
	M	**"Maintenance required"** Maintenance is required. The measured value remains valid. The display alternates between the measured value and the diagnostic message.

6.2.2 Local operation

You can make various hardware settings using miniature switches (DIP switches) on the rear of the optional display.

Optionally, the display can be ordered with the head transmitter, or as an accessory for subsequent mounting. → 50

NOTICE

- ESD - Electrostatic discharge. Protect the terminals from electrostatic discharge. Failure to observe this may result in the destruction or malfunction of parts of the electronics.

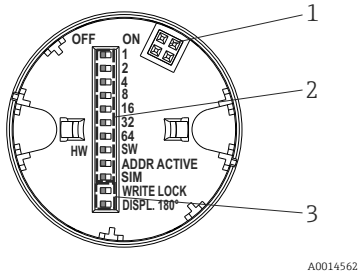

11 Hardware settings via DIP switches

1:	Connection to head transmitter
2:	DIP switches (1 - 64, SW/HW and ADDR) for configuring the device address
3:	DIP switch (SIM = simulation mode (has no function); WRITE LOCK = write protection; DISPL. 180° = switch (turn) the display screen 180°)

Procedure for setting the DIP switch:

1. Open the cover of the terminal head or field housing.
2. Remove the attached display from the head transmitter.
3. Configure the DIP switch on the rear of the display accordingly. In general: switch to ON = function is active, switch to OFF = function disabled.
4. Fit the display onto the head transmitter in the correct position. The head transmitter accepts the settings within one second.
5. Secure the cover back onto the terminal head or field housing.

Switching write protection on/off

Write protection is switched on and off via a DIP switch on the rear of the optional attachable display. When write protection is active, parameters cannot be modified. The current write protection status is displayed in the parameter HW WRITE PROTECT (Physical Block). When the hardware lock is enabled ("WRITE LOCK" is "ON"), a key symbol is shown on the display.

Hardware locking for the device is disabled (HW_WRITE_PROTECTION = 0) as soon as the display is removed. When the display is attached, the value set at the DIP switch is updated in the device.

Turning the display

The display can be rotated 180° via the DIP switch. The DIP switch setting is saved and displayed via a read-only parameter (DISP_ORIENTATION) in the display transducer block. The setting is retained when the display is removed.

Configuring the device address

Preparing the display:

1. Set **ADDR ACTIVE** DIP switch to ON.
2. Set **SW-HW** DIP switch to HW.
3. Set the address as required.

Connecting the display:

1. Attach the display.
2. Wait until the display has completely started and displays the measured temperature.
3. Disconnect the transmitter from the PA bus (power off).

4. Remove the display from the transmitter and set the **ADDR ACTIVE** DIP switch to OFF.
5. Connect the transmitter to the PA bus again (power on).
   ↳ The configured address is permanently stored in the transmitter.
6. Optionally check the address in the PLC or plug a display into OFF using the **ADDR ACTIVE** DIP switch.
   ↳ The configured PA address is shown when the display is started.

Note the following points:

- The address must always be configured for a PROFIBUS® PA device. Valid device addresses are in the range between 0 and 125. In a PROFIBUS® PA network, each address can only be assigned once. If an address is not configured correctly, the device is not recognized by the master. The address 126 is used for initial commissioning and service purposes.
- All devices are delivered ex works with the address 126 and software addressing.

The hardware address is set via DIP switches 1 (1) - 7 (64). The DIP switch (SW-HW) must be set to "HW" and the **ADDR ACTIVE** DIP switch to "ON" to use the configured hardware address.

The transmitter must be restarted so that the transmitter will adopt and save the DIP switch settings.

Software address means that the saved bus address can be changed via a DDLM_SLAVE_ADD message. In contrast, if a display with a valid address is attached, the address configured on the display is used and a DDLM_SLAVE_ADD message is ignored.

If the display is disconnected or a display is attached to the **SW/HW** using the DIP switch (**ADDR ACTIVE** DIP switch set to ON), the currently saved bus address can be changed again via a DDLM_SLAVE_ADD telegram. The currently saved bus address is used until it is changed via a DDLM_SLAVE_ADD message. When this happens, the bus address is changed directly on receipt of the message and does not require the device to be restarted.

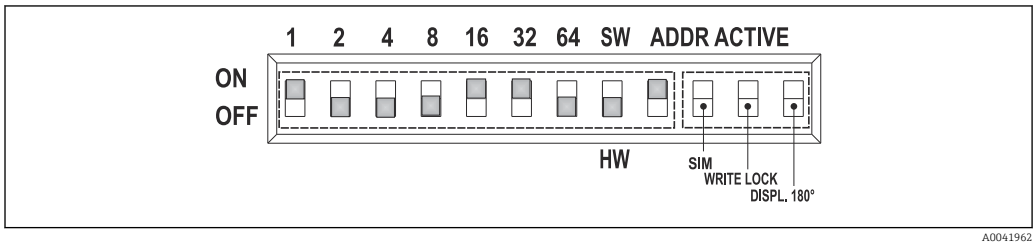

12 Configuration of the device address using the example of bus address 49

DIP switch set to ON: 32 + 16 + 1 = 49. Furthermore, DIP switch **SW/HW** set to "HW" and **ADDR ACTIVE** to "ON".

- **Attaching the display during measuring operation**
  The DIP switches for the bus address are checked during operation and a configured, valid bus address (DIP switch: **SW/HW** set to HW; **ADDR ACTIVE** set to ON; bus address < 126) is saved and adopted the next time the device is restarted.
  Attaching the display does not affect the bus address provided that the **ADDR ACTIVE** DIP switch is set to OFF. If the switch is set to ON and if a valid bus address is configured (DIP switch: **SW/HW** to HW; **ADDR ACTIVE** to ON; bus address < 126), the address is adopted the next time the device is started. If the device does not start within 30 minutes of the change of bus address, this change is rejected and the device retains the last saved address.
  If the **ADDR ACTIVE** DIP switch is set to ON and the **SW/HW** DIP switch is set to SW, this does not affect the bus address.
- **Removing the display during operation**
  If the display is removed during operation, the transmitter uses the address saved in the device and operation continues without restriction.
- **Resetting the bus address to the default value 126**

1. Attach a display with a valid HW address (DIP switch: **SW/HW** to HW; **ADDR ACTIVE** to ON; bus address < 126).
2. Wait until the company logo appears on the display.
3. Remove the display and set the **SW/HW** DIP switch to SW.
4. Attach the display again and wait until the company logo appears.
   ↳ Once the device is restarted, bus address 126 is used.

6.3 Access to the operating menu via the operating tool

6.3.1 FieldCare

Function scope

FDT/DTM-based plant asset management tool from Endress+Hauser. It can configure all intelligent field units in a plant and helps you manage them. By using the status information, it is also a simple but effective way of checking their status and condition. The tool is supplied with complete libraries of certified DTMs (Device Type Manager) and FDI Packages for operation of all Endress+Hauser field devices, has CommDTMs for HART, PROFIBUS, FOUNDATION Fieldbus, IO-Link, PROFINET and Endress+Hauser protocols.

Typical functions:
- Configuration of transmitter parameters
- Loading and saving of device data (upload/download)
- Documenting the measuring point
- Visualizing the measured value memory (line recorder) and event logbook

For details, see Operating Instructions BA00027S (Getting started) and BA00065S

Source for device description files

For details, see → 31

6.3.2 SIMATIC PDM

Function scope

SIMATIC PDM is a standardized, manufacturer-independent program from Siemens for the operation, configuration, maintenance and diagnostics of intelligent field devices.

Source for device description files

For details, see → 🗎 31

7 System integration

7.1 Current device description files

The following table indicates the suitable device description file for the individual operating tools and specifies where these files can be obtained.

PROFIBUS PA protocol (IEC 61158-2, MBP):

Valid for firmware/ software:	1.00.zz	1.01.zz	See the DEVICE SOFTWARE parameter
PROFIBUS® PA device data Profile version:	3.01	3.02	See the PROFILE VERSION parameter
TMT84 device ID: Profile ID:	1551_{hex} Depending on the Profile GSD file used: 0x9703, 0x9702, 0x9701 or 0x9700		See the DEVICE ID parameter
GSD information			
TMT84 GSD:	Extended		Compatibility matrix:
Profile GSD:	PA139700.gsd PA139701.gsd PA139702.gsd PA139703.gsd		| EH3x1551.gsd | EH021551.gsd 1.00.zz | OK | STOP [1)] 1.01.zz | OK | OK
Bitmaps	EH1551_D.bmp EH1551_N.bmp EH1551_S.bmp		
Operating program/ device driver:	**Sources for obtaining device descriptions/program updates, free on the Internet:**		
GSD	▪ www.endress.com (→ Downloads → Device driver and firmware) ▪ www.profibus.com		
FieldCare/DTM	www.endress.com (→ Downloads → Device driver and firmware)		
SIMATIC PDM	www.feldgeraete.de		

1) Can be used if the entry "C1_Read_Write_supp = 1" in the GSD file is set to "C1_Read_Write_supp = 0".

7.2 Integrating the device into a system

The device is ready for system integration after commissioning using the class 2 master. In order to integrate the field devices into the bus system, the PROFIBUS® PA system needs a description of the device parameters, such as output data, input data, data format, data volume and supported transmission rate.

These data are contained in a so-called device master file (GSD file), which is made available to the PROFIBUS® PA master during commissioning of the communication system.

In addition, device bitmaps, that appear as icons in the network structure, can also be integrated. With the Profile 3.02 device master file (GSD), it is possible to exchange field devices made by different manufacturers without having to reconfigure. Generally speaking two different GSD versions are possible with Profile 3.02 (factory setting: manufacturer-specific GSD):

- **Manufacturer-specific GSD:**
  This GSD ensures unrestricted functionality of the field device. Device-specific process parameters and functions are therefore available.
- **Profile GSD:**
  Varies with regard to the number of Analog Input blocks. If a system is configured with the profile GSD, devices of different manufacturers can be exchanged. However, it is essential to ensure that the order of the cyclic process values is correct.

1. Manufacturer-specific GSD, EH021551.gsd or EH3x1551.gsd (→ Section 6.5 "Current device description files") Ident number = 1551 (hex) Ident number selector = 1
2. Profile GSD, PA139703.gsd (4 analog inputs) Ident number = 9703 (Hex) Ident number selector = 0
3. Profile GSD, PA139700.gsd (1 analog input) Ident number = 9700 (hex) Ident number selector = 129
4. Profile GSD, PA139701.gsd (2 analog inputs) Ident number = 9701 (hex) Ident number selector = 130
5. Profile GSD, PA139702.gsd (3 analog inputs) Ident number = 9702 (hex) Ident number selector = 131
6. Manufacturer-specific GSD, Eh3x1523.gsd (compatibility mode TMT184) Ident number = 1523 (hex) Ident number selector = 128

Before configuring, it is essential to decide which GSD should be used to operate the plant. The setting can be changed using a Class 2 master. The transmitter supports the following GSD files (see table under → Section 6.5 "Current device description files").

Every device is assigned an identification number (ID) by the PROFIBUS User Organization (PNO). The name of the GSD file is derived from this number. For Endress+Hauser, this ID number starts with the manufacturer ID 15xx. For better classification and clarity of the respective GSD, Endress+Hauser GSD names are as follows:

EH0215xx	EH = Endress+Hauser 02 = GSD revision 15xx = ID no.

The GSD files for all Endress+Hauser devices can be requested as follows:

- Internet (Endress+Hauser) → http://www.endress.com (downloads → Device driver and firmware)
- Internet (PNO) → http://www.profibus.com (GSD library)

7.2.1 Extended formats

There are some GSD files whose modules are transferred using an extended identification (e.g., 0x42, 0x84, 0x08, 0x05). These GSD files are located in the "Extended" folder.

7.2.2 Contents of the download file

- All the manufacturer's GSD files
- Endress+Hauser bitmap files
- Useful information on the devices

7.2.3 Working with the device master files (GSD)

The GSD files must be integrated into the automation system. Depending on the firmware/software used, the GSD files can either be copied to the program-specific directory or read into the database via an import function within the configuration software.

Example:

The subdirectory is ...\siemens\step7\s7data\gsd for the Siemens STEP 7 configuration software from Siemens PLC S7-300/400.

The GSD files also include bitmap files. These bitmap files are required to illustrate the measuring points. The bitmap files must be loaded into the directory: ...\siemens \step7\s7data\nsbmp.

For other configuration software, contact the manufacturer of your PLC for the correct directory.

7.2.4 Compatibility with previous model TMT184

When the device replaces the previous model, the iTEMP TMT84 head transmitter ensures the compatibility of the cyclical data with the previous model iTEMP TMT184 with profile version 3.0 (ID no. 1523). It is possible to replace an iTEMP TMT184 with an iTEMP TMT84 without the need to reconfigure the PROFIBUS® DP/PA network in the automation system even though the names and ID numbers of the devices differ.

Automatic identification

Once the head transmitter is replaced, the device switches automatically from the standard operating mode to the compatibility mode if the **PROFIBUS Ident Number Selector** parameter is set to 127 (default factory setting). The compatibility mode can also be activated by setting the **PROFIBUS Ident Number Selector** parameter to 128 (Manuf.-specific Ident Number 1523 - TMT184). This value is transmitted and evaluated by the master when cyclical communication is being established. This number determines whether the iTEMP TMT84 is configured for the standard mode or the compatibility mode.

Manual changeover from operation as an iTEMP TMT84 or iTEMP TMT184 is supported.

Notes on diagnostics in compatibility mode

- If the iTEMP TMT84 is acyclically configured via an operating program (Class 2 master), access is directly via the block structure or the parameters of the device.
- If parameters have been changed in the device to be replaced (iTEMP TMT184, parameter setting no longer corresponds to the original factory default setting), these parameters must be changed accordingly in the new replacement iTEMP TMT84 using an operating program (Class 2 master).
- As the iTEMP TMT84 behaves the same as an iTEMP TMT184 in compatibility mode with regard to diagnostics and status handling, only the PA-Profile 3.0 is supported with regard to the diagnostic bits and status codes during operation in this mode.

Replacing the devices

Procedure:

Remove the iTEMP TMT184
▼
Configure the device address (→ 🗎 27) The same device address that was configured for the iTEMP TMT184 must be used.
▼
Connect the iTEMP TMT84
▼
Adjust the following settings if necessary (if the factory setting had been altered): Configuration of the application-specific parameters Configuration of the units for the process variables

7.2.5 Cyclical data exchange

In PROFIBUS® PA, the analog values are cyclically transmitted to the automation system in data blocks of 5 bytes. The measured value is represented in the first 4 bytes in the form of floating point numbers in accordance with IEEE 754 standard (see IEEE floating point number). The 5th byte contains status information relating to the measured value, which is implemented as per profile 3.02 [1)] specification. The status is displayed as a symbol on the device display if available. For a detailed description of the data types, see the "Operation using PROFIBUS® PA" section.

IEEE floating point number

Conversion of a hexadecimal value to an IEEE floating point number for measured value acquisition. The measured values are represented as follows in the IEEE-754 number format and transmitted to the Class 1 master:

Byte n			Byte n+1			Byte n+2		Byte n+3	
Bit 7	Bit 6	Bit 0	Bit 7	Bit 6	Bit 0	Bit 7	Bit 0	Bit 7	Bit 0
Sign	2^7 2^6 2^5 2^4 2^3 2^2 2^1		2^0	2^{-1} 2^{-2} 2^{-3} 2^{-4} 2^{-5} 2^{-6} 2^{-7}		2^{-8} 2^{-9} 2^{-10} 2^{-11} 2^{-12} 2^{-13} 2^{-14} 2^{-15}		2^{-16}...2^{-23}	
	Exponent			**Mantissa**		**Mantissa**		**Mantissa**	

Sign = 0: positive number

Sign = 1: negative number $\quad Number = -1^{sign} \cdot (1 + M) \cdot 2^{E-127}$

E = exponent; M = mantissa

Example: 40 F0 00 00 h $\quad$ = 0100 0000 1111 0000 0000 0000 0000 0000 b

Value $\quad = -1^0 \cdot 2^{129-127} \cdot (1 + 2^{-1} + 2^{-2} + 2^{-3})$

$= 1 \cdot 2^2 \cdot (1 + 0.5 + 0.25 + 0.125)$

$= 1 \cdot 4 \cdot 1.875 = 7.5$

Block model

The device supports a maximum of 5 slots for cyclic data exchange. A maximum of 4 values can be selected and transmitted. Elements of cyclic communication:

Slot	Data block	Access
1	Analog Input 1	Read
2	Analog Input 2	Read
3	Analog Input 3	Read
4	Analog Input 4	Read
5	Display value	Write

General description of blocks:

Block name	Short description	Slot
Physical block	General device data	0
Transducer Block 1	Sensor settings channel 1	1

1) According to Profile 3.01: Profile GSD files used or IDENT_NUMBER_SELECTOR set to {0, 129, 130 or 131} or TMY84 GSD file used or IDENT_NUMBER_SELECTOR set to 1 and "CondensedStatus" parameter set to OFF. According to Profile 3.02: TMT84 GSD file used or IDENT_NUMBER_SELECTOR set to 1 and "CondensedStatus" parameter set to ON. If IDENT_NUMBER_SELECTOR = 127, the GSD file used to establish cyclic data exchange determines whether diagnostics are performed according to Profile 3.01 or Profile 3.02.)

Block name	Short description	Slot
Transducer Block 2	Sensor settings channel 2	2
Analog Input Block 1	Output of a measured value	1
Analog Input Block 2	Output of a measured value	2
Analog Input Block 3	Output of a measured value	3
Analog Input Block 4	Output of a measured value	4

The illustrated block model (→ 13, 35) shows which input and output data the device makes available for cyclic data exchange.

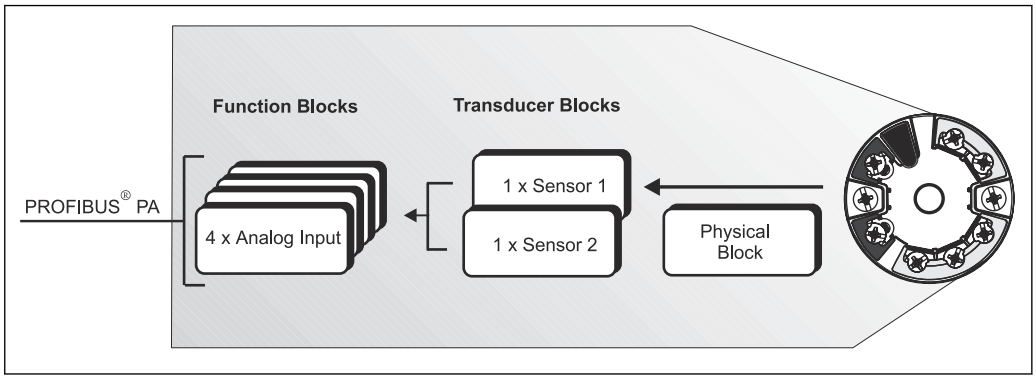

13 *Head transmitter block model, Profile 3.02*

Display value

The display value contains 4 bytes with the measured value and 1 byte with the status.

Input data

Input data are process temperature and internal reference temperature.

Data transfer from the head transmitter to the automation system

The order of the input and output bytes is fixed. If addressing is done automatically using the configuration program, the numerical values of the input and output bytes can differ from the values in the following table.

Input byte	Process parameters	Access type	Comment/data format	Default value unit
0, 1, 2, 3	*Temperature [1]	Read	32-bit floating point number (IEEE-754) Representation → 34	°C
4	*Status temperature [1]		Status code	-
Possible settings: ▪ Primary value of the transducer ▪ Measured value of sensor at sensor input ▪ Measured value of the internal reference measuring point		→ Select in the CHANNEL parameter → Primary Value TB1 → Select in the CHANNEL parameter → Secondary Value TB1 → Select in the CHANNEL parameter → Internal temperature		

1) Depends on the option selected in the CHANNEL parameter of the Analog Input function block

The system units in the table correspond to the preset scalings transferred during cyclic data exchange. However, in the case of customer-specific configuration, the units can differ from the default value.

Output data

The display value provides the possibility to transmit a measured value calculated in the automation system directly to the head transmitter. This measured value is purely a display value, for example displayed by PROFIBUS® PA Display RID16. The display value contains 4 bytes with the measured value and 1 byte with the status.

Input byte	Process parameters	Access type	Comment/data format
0, 1, 2, 3	Display value	Write	32-bit floating point number (IEEE-754) representation → 🗎 34
4	Status display value	Write	-

Only activate the data blocks that are processed in the automation system. This improves the data throughput rate of a PROFIBUS® PA network. A flashing, double-headed arrow symbol is shown on the optional display to indicate that the device is communicating with the automation system.

System units

The measured values are transmitted to the automation system via cyclic data exchange in the system units as described in the "Group Setup" section (UNIT N parameter).

Configuration example

Generally, a PROFIBUS® DP/PA system is configured as follows:

1. The field devices (iTEMP TMT84) to be configured are integrated into the configuration program of the automation system via the PROFIBUS® DPNetwork using the GSD file. Required measured variables can be configured offline with the configuration software.
2. The application program of the automation system should now be programmed. The input and output data are controlled in the application program and the location of the measured variables is specified so that they can be processed further.
3. If necessary, an additional measured value conversion component must be used for an automation system that does not support the IEEE-754 floating point number format.
4. Depending on the data processing type in the automation system (little-endian or big-endian format), it may be necessary to change the byte order (byte swapping).
5. Once configuration has been completed, this is transferred to the automation system as a binary file.
6. The system can now be started. The automation system establishes a connection to the configured devices. The process-related device parameters can now be set using a Class 2 master, for example with the help of FieldCare.

7.2.6 Acyclic data exchange

Acyclic data exchange is used to transfer parameters during commissioning, maintenance or for the display of further measured variables that are not contained in cyclic data communication. Parameters for identification, control or adjustment can thus be changed in the various blocks (physical block, transducer block, function block) while the device is in cyclic data exchange with a PLC.

The device supports the following basic types of acyclic data transmission:

MS2AC communication with 2 available SAPs.

With regard to acyclic communication, a distinction must be made between two types:

Acyclic communication with a Class 2 master (MS2AC)

MS2AC refers to acyclic communication between a field device and a Class 2 master (e.g., Fieldcare, PDM, etc.). Here, the master opens a communication channel via an SAP (Service Access Point) to access the device.

All parameters to be exchanged with a device using PROFIBUS® must be communicated to a Class 2 master. This assignment is done either in a device description (DD), a DTM (device type manager) or within a software component in the master via slot and index addressing for each individual parameter.

The slot and index, details on length (byte) and the data record are transferred in addition to the field device address when parameters are written using a Class 2 master. The slave acknowledges this write request on completion. The blocks can be accessed with a Class 2 master. The parameters that can be used in the E+H operating program (FieldCare) are shown in the tables in Section 13.

Note the following for MS2AC communication:

- As already explained, a Class 2 master accesses a device via special SAPs. Therefore, the number of Class 2 masters that can communicate simultaneously with a device will depend on the number of SAPs made available for this communication.
- The use of a Class 2 master increases the cycle time of the bus system. This must be taken into account when programming the control system or controller used.

Acyclic communication with a Class 1 master (MS1AC)

In the case of MS1AC, a cyclic master, which is already reading the cyclic data from the device or writing the data to the device, opens the communication channel via the SAP 0x33 (special service access point for MS1AC) and can then, like a Class 2 master, acyclically read or write a parameter by means of the slot and the index (if supported).

Note the following for MS1AC communication:

- Currently, there are few PROFIBUS masters on the market that support this kind of communication.
- Not all PROFIBUS devices support MS1AC.
- In the user program, you must be aware that constant parameter writing (e.g., with every program cycle) can drastically reduce the operating life of a device. Parameters written acyclically are saved as persistent data to the memory modules (e.g., EEPROM, Flash). These memory modules are only designed for a limited number of writes. This number of writes is not even nearly reached in normal operation without MS1AC (during configuration). This maximum figure can be quickly reached as a result of incorrect programming and thus the operating time of a device can be drastically reduced.

The device supports MS2AC communication with two available SAPs. MS1AC communication is supported by the device. The memory module is designed for 10^6 writes.

8 Commissioning

8.1 Function check

Before commissioning the measuring point make sure that all final checks have been carried out:
- "Post-installation check" checklist, → 16
- "Post-connection check" checklist, → 24

The functional data of the PROFIBUS® PA interface as per IEC 61158-2 (MBP) must be observed.

A standard multimeter can be used to check the bus voltage of approx. 9 to 32 V at the measuring device and the current consumption of approx. 11 mA.

8.2 Switching on the device

Once you have completed the post-connection checks, switch on the supply voltage. The transmitter performs a number of internal test functions after power-up. During this process, the following sequence of messages appears on the display:

Step	Display/indication
1	Display name and the firmware (FW) and hardware (HW) version
2	Firm logo
3a	Device name and the FW and HW of the head transmitter
3b	The device address, IDENT_NUMBER_SELECTOR mode and the current IDENT_NUMBER are displayed
3c	Sensor configuration
4a	Current measured value or
5b	Current diagnostic message If the switch-on procedure is not successful, the relevant diagnostic event is displayed, depending on the cause. A detailed list of diagnostic events and the corresponding troubleshooting instructions can be found in the "Diagnostics and troubleshooting" section .

The device is operational after approx. 8 seconds, and the attached display after approx. 12 seconds in normal operating mode! Normal measuring mode commences as soon as the switch-on procedure is completed. Measured values and status values appear on the display.

8.3 Configuring the device

A detailed description of all the functions required for commissioning can be found in the "Operation using PROFIBUS® PA" section.

8.4 Unlocking write protection

If the device is locked and the parameter settings cannot be changed, it must first be enabled via the hardware or software lock. The device is write-protected if the lock symbol appears in the header of the measured value display.

To unlock the device

- either switch the write protection switch on the back of the display to the "OFF" position (hardware write protection), → 26 or
- disable the software write protection via the operating tool. See the description for the “Define device write protection” parameter in the Operating Instructions.

When hardware write protection is active (write protection switch on the back of the display set to the “ON” position), write protection cannot be disabled via the operating tool. Hardware write protection must always be disabled before software write protection can be enabled or disabled.

9 Diagnostics and troubleshooting

9.1 General troubleshooting

Always start troubleshooting with the checklists below if faults occur after startup or during operation. The checklists take you directly (via various queries) to the cause of the problem and the appropriate remedial action.

Due to its design, the device cannot be repaired. However, it is possible to send the device in for inspection. See the information in the "Return" section. → 📄 50

Checking the local display	
Display is blank	1. Check the supply voltage at the head transmitter → terminals + and - 2. Ensure that the holders are correctly seated and that the display is properly connected to the head transmitter, see the section 4.2. → 📄 16 3. If possible, test the display with other suitable Endress+Hauser head transmitters 4. Display defective → Replace display 5. Head transmitter defective → Replace transmitter

Onsite error messages on the display
→ 📄 43

Faulty connection to the fieldbus host system	
No connection can be made between the fieldbus host system and the device. Check the following points:	
Fieldbus connection	Check the data cable
Fieldbus connector (optional)	Check the pin assignment/wiring,
Fieldbus voltage	Check whether a min. bus voltage of 9 V_{DC} is present at the +/- terminals. Permitted range: 9 to 32 V_{DC}
Network structure	Check permissible fieldbus cable length and number of spurs
Basic current	Is there a basic current of min. 11 mA?
Terminating resistors	Has the PROFIBUS® PA segment been terminated correctly? Each bus segment must always be terminated with a bus terminator at both ends (start and finish). Otherwise there may be interference in data transmission.
Current consumption, permissible feed current	Check the current consumption of the bus segment: The current consumption of the bus segment in question (= total of basic currents of all bus users) must not exceed the max. permitted feed current of the bus power supply unit.
Error messages in the PROFIBUS® PA configuration system	
→ 📄 43	

Other errors (application errors without messages)	
Some other error has occurred.	Possible causes and remedial action, see Section 11.4 → 📄 48

9.2 Diagnostic information via communication interface

9.2.1 Display in the operating program (acyclic data transfer)

The device status can be queried via an operating program, see the "Operation via PROFIBUS® PA" section: EXPERT → DIAGNOSTICS → STATUS).

9.2.2 Display in the FieldCare diagnostic module (acyclic data transfer)

The general device status as per NAMUR NE107 can be quickly determined using the start screen of an online connection to the device. All diagnostic messages for the measuring point have been classified into four categories (Failure, Function Check, Out of Specification, Maintenance Required), thereby providing the user with information on the cause and possible corrective measures. If there is no diagnostic message, the status signal "ok" appears.

The graphic shows a failure caused by a open circuit at sensor 1:

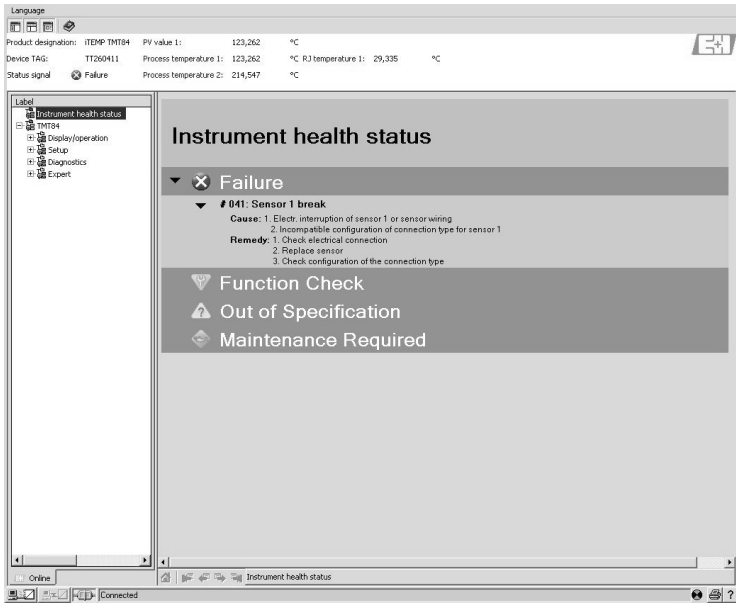

A0042284

9.2.3 Display in the PROFIBUS® master system (cyclic data transfer)

If the AI module is configured for cyclic data transfer, the device status is coded according to PROFIBUS Profile Specification 3.02 [2)]If IDENT_NUMBER_SELECTOR = 127, the GSD file used to establish cyclic data exchange determines whether diagnostics are performed according to Profile 3.01 or Profile 3.02.) specification. coded and transmitted with the measured value vie the quality byte (byte 5) to the PROFIBUS master (class 1). The quality byte is divided into the segments quality status, quality substatus and limits (limit values).

2) According to Profile 3.01: Profile GSD files used or IDENT_NUMBER_SELECTOR set to {0, 129, 130 or 131} or device GSD file used or IDENT_NUMBER_SELECTOR set to 1 and "CondensedStatus" parameter to OFF. According to Profile 3.02: Device GSD file used or IDENT_NUMBER_SELECTOR set to 1 and "CondensedStatus" parameter set to ON.

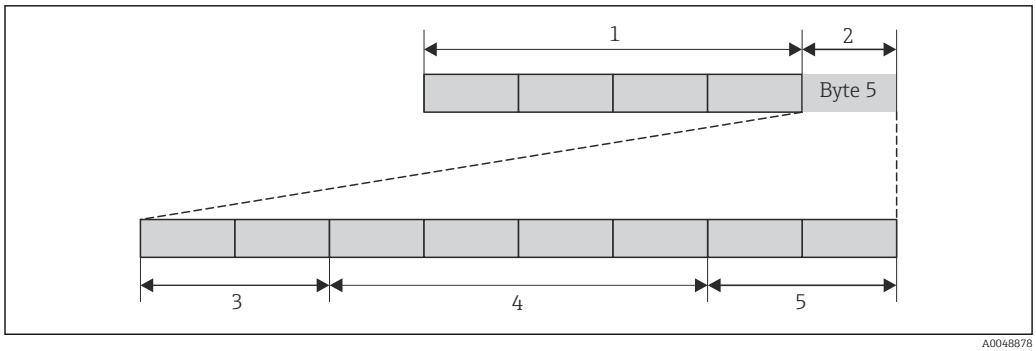

1 *Measured value*
2 *Quality code*
3 *Quality status*
4 *Quality substatus*
5 *Limits*

The content of the quality byte of an Analog Input function block depends on its configured failsafe mode. Depending on the failsafe mode configured in the FAILSAFE MODE function, the following status information is transferred to the PROFIBUS master (Class 1) via the quality byte:

FAILSAFE MODE as per Profile 3.01

Quality code (HEX)	Quality status	Quality substatus	Limits
0x48 0x49 0x4A	UNCERTAIN	Substitute set	OK Low High

If FAILSAFE MODE → LAST GOOD VALUE is selected (default value):

Valid output value before error				No valid output value before error			
Quality code (hex)	Quality status	Quality substatus	Limits	Quality code (hex)	Quality status	Quality substatus	Limits
0x44 0x45 0x46	UNCERTAIN	Last usable value	OK Low High	0x4C 0x4D 0x4E	UNCERTAIN	Initial value	OK Low High

If FAILSAFE MODE → WRONG VALUE is selected: Diagnostic messages (→ 📄 43).

The FAILSAFE MODE function can be configured via an operating program (e.g., FieldCare) in the respective Analog Input function block (1 to 4).

FAILSAFE MODE as per Profile 3.02

Input	Result		
State before Fail Safe Mechanism (FB input)	FSAFE_TYPE 0 (Failsafe Value)	FSAFE_TYPE 1 (Last usable value)	FSAFE_TYPE 2 (Wrong calculated value)
BAD - non specific (Not generated by the device)	-	-	-
BAD - passivated	BAD - passivated	BAD - passivated	BAD - passivated
BAD - maintenance alarm	UNCERTAIN - substitute set	UNCERCTAIN - substitute set	BAD - maintenance alarm

Input	Result		
BAD - process related	UNCERTAIN - process related	UNCERTAIN - process related	BAD - process related
BAD - function check	UNCERTAIN - substitute set	UNCERTAIN - substitute set	BAD - function check

9.3 Overview of diagnostic information

The device displays warnings or alarms as diagnostic messages. If errors occur during commissioning or measuring operation, these errors are displayed immediately. Errors are displayed in the configuration program via the parameter in the Physical Block or on the onsite display. A distinction is made here between the following 4 status categories:

Status category	Description	Error category
F	Fault detected ('Failure')	ALARM
M	Maintenance required ('Maintenance')	WARNING
C	Device is in the service mode (check) ('Service mode')	
S	Specifications not observed ('Out of specification')	

WARNING error category:

With "M", "C" and "S" diagnostic messages, the device tries to continue measuring (uncertain measurement!). If a display unit is attached, the display alternates between the status and the primary measured value indicated by the relevant letter plus the defined error number.

ALARM error category:

The device does not continue measuring with the "F" diagnostic message. If a display unit is attached, the display alternates between the diagnostic message and "- - - -" (no valid measured value available). Depending on the setting of the Fail Safe Type parameter (FSAFE_TYPE), the last valid measured value, the incorrect measured value or the value configured under Fail Safe Value (FSAFE_VALUE) is transmitted via the fieldbus with the status "BAD" or "UNCERTAIN" for the measured value. The fault state is displayed in the form of the letter "F" plus a defined number.

In both instances, the system outputs the sensor that generates the status, e.g., "C1", "C2". If the name of a sensor is not displayed, the diagnostic message does not refer to a sensor but refers to the device itself.

Abbreviations for output variables:

- SV1 = Secondary value 1 = Sensor value 1 in Temperature Transducer Block 1 = Sensor value 2 in Temperature Transducer Block 2
- SV2 = Secondary value 2 = Sensor value 2 in Temperature Transducer Block 1 = Sensor value 1 in Temperature Transducer Block 2
- PV1 = Primary value 1
- PV2 = Primary value 2
- RJ1 = Reference junction 1
- RJ2 = Reference junction 2

9.4 Diagnostic list

9.4.1 Category F diagnostics code messages

Category	No.	Diagnostic messages ▪ In the Physical Block ▪ Diagnostic code ▪ Advanced diagnostics ▪ Local display	Sensor Transducer Block measured value status 1 = Status (Profile 3.01/3.02) 2 = Quality 3 = Substatus (Profile 3.01/3.02) 4 = Limits	Cause of error/remedy	Output variables affected
F-	041	Device diagnostic message (PA): Sensor open circuit F-041 Local display: F041	1 = 0x10 [1]1 / 0x24 [2] 2 = BAD 3 = Sensor Failure / Maintenance alarm, more diagnosis available 4 = OK	Cause of error: 1. Electr. interruption of sensor or sensor wiring. 2. Incorrect setting for type of connection in the CONNECTION TYPE parameter. Remedy: Re 1.) Reestablish electr. connection or replace sensor. Re 2.) Configure correct type of connection.	SV1, SV2, also PV1, PV2 depending on the configuration
F-	042	Device diagnostic message (PA): Sensor corrosion F-042 Local display: F042	1 = 0x10x24 [1] 2 = BAD 3 = Sensor Failure / Maintenance alarm, more diagnosis available 4 = OK	Cause of error: Corrosion detected on the sensor terminals. Remedy: Check wiring and replace if necessary.	SV1, SV2, also PV1, PV2 depending on the configuration
F-	043	Device diagnostic message (PA): Sensor short circuit F-043 Local display: F043	1 = 0x10x24 [1] 2 = BAD 3 = Sensor Failure / Maintenance alarm, more diagnosis available 4 = OK	Cause of error: Short circuit detected at the sensor terminals. Remedy: Check the sensor and sensor wiring.	SV1, SV2, also PV1, PV2 depending on the configuration
F-	103	Device diagnostic message (PA): Sensor drift F-103 local display: F103	1 = 0x10x24 [1] 2 = BAD 3 = Sensor Failure / Maintenance alarm, more diagnosis available 4 = OK	Cause of error: Sensor drift has been detected (in accordance with the settings in the Transducer Blocks). Remedy: Check the sensor, depending on the application.	PV1, PV2 SV1, SV2
F-	221	Device diagnostic message (PA): Reference temperature measurement F-221 local display: F221	1 = 0x0C/0x24 [1] 2 = BAD 3 = Sensor Failure / Maintenance alarm, more diagnosis available 4 = OK	Cause of error: Internal reference junction defective. Remedy: Device defective, replace	SV1, SV2, PV1, PV2, RJ1, RJ2
F-	261	Device diagnostic message (PA): Electronic failure F-261 Local display: F261	1 = 0x0C/0x24 [1] 2 = BAD 3 = Sensor Failure / Maintenance alarm, more diagnosis available 4 = OK	Cause of error: Electronics error. Remedy: Device defective, replace	SV1, SV2, PV1, PV2, RJ1, RJ2
F-	283	Device diagnostic message (PA): Memory error F-283 Local display: F283	1 = 0x0C/0x24 [1] 2 = BAD 3 = Sensor Failure / Maintenance alarm, more diagnosis available 4 = OK	Cause of error: Error in memory. Remedy: Device defective, replace	SV1, SV2, PV1, PV2, RJ1, RJ2

Category	No.	Diagnostic messages ▪ In the Physical Block ▪ Diagnostic code ▪ Advanced diagnostics ▪ Local display	Sensor Transducer Block measured value status 1 = Status (Profile 3.01/3.02) 2 = Quality 3 = Substatus (Profile 3.01/3.02) 4 = Limits	Cause of error/remedy	Output variables affected
F-	431	Device diagnostic message (PA): Calibration incorrect F-431 Local display: F431	1 = 0x0C/0x24 [1)] 2 = BAD 3 = Sensor Failure / Maintenance alarm, more diagnosis available 4 = OK	Cause of error: Error in calibration parameters. Remedy: Device defective, replace	SV1, SV2, PV1, PV2, RJ1, RJ2
F-	437	Device diagnostic message (PA): Configuration incorrect F-437 Local display: F437	1 = 0x0C/0x24 [1)] 2 = BAD 3 = Sensor Failure / Maintenance alarm, more diagnosis available 4 = OK	Cause of error: Incorrect configuration in Transducer Blocks "Sensor 1 and 2". Remedy: Check the configuration of the sensor types used, the units and the settings of PV1 and/or PV2.	SV1, SV2, PV1, PV2, RJ1, RJ2
F-	502	Device diagnostic message (PA): Linearization error F-502 Local display: F502	1 = 0x0C/0x24 [1)] 2 = BAD 3 = Sensor Failure / Maintenance alarm, more diagnosis available 4 = OK	Cause of error: Linearization error. Remedy: Select valid type of linearization (sensor type).	SV1, SV2, PV1, PV2, RJ1, RJ2

1) → 🗎 47
2) → 🗎 47

9.4.2 Category M diagnostics code messages

Category	No.	Diagnostic messages ▪ In the Physical Block ▪ Diagnostic code ▪ Advanced diagnostics ▪ Local display	Sensor Transducer Block measured value status 1 = Status (Profile 3.01/3.02) 2 = Quality 3 = Substatus (Profile 3.01/3.02) 4 = Limits	Cause of error/remedy	Output variables affected
M-	042	Device diagnostic message (PA): Corrosion M-042 Local display: M042	1 = 0x50 [1)]/0xA4 [1)] 2 = UNCERTAIN/GOOD 3 = Sensor conversion not accurate / Maintenance required/ demanded 4 = OK	Cause of error: Corrosion detected on the sensor terminals. Remedy: Check wiring and replace if necessary.	SV1, SV2, also PV1, PV2 depending on the configuration
M-	103	Device diagnostic message (PA): Drift M-103 Local display: M103	1 = 0x10 [1)]/0xA4 [1)] 2 = UNCERTAIN / GOOD 3 = non specific / Maintenance required / demanded 4 = OK	Cause of error: Sensor drift has been detected (in accordance with the settings in the Transducer Blocks). Remedy: Check the sensor, depending on the application.	PV1, PV2 SV1, SV2
M-	262	Device diagnostic message (PA): Display communication error M-262 Local display: M262	ℹ Does not affect the measured value status	Cause of error: No communication possible with the display. Remedy: ▪ Ensure that the holders are correctly seated and that the display is properly connected to the head transmitter. ▪ If possible, test the display with other suitable Endress+Hauser head transmitters ▪ Display defective → Replace display	SV1, SV2, PV1, PV2, RJ1, RJ2

1) See note → 🗎 47

9.4.3 Category S diagnostics code messages

Category	No.	Diagnostic messages ▪ In the Physical Block ▪ Diagnostic code ▪ Advanced diagnostics ▪ Local display	Sensor Transducer Block measured value status 1 = Status (Profile 3.01/3.02) 2 = Quality 3 = Substatus (Profile 3.01/3.02) 4 = Limits	Cause of error/remedy	Output variables affected
S-	101	Device diagnostic message (PA): Sensor measuring range undershot S-101 Local display: S101	1 = 0x50 [1)]/0x78 [1)] 2 = UNCERTAIN 3 = Sensor conversion not accurate / Process related, no maintenance 4 = OK	Cause of error: Physical measuring range undershot. Remedy: Select suitable sensor type.	SV1, SV2, also PV1, PV2 depending on the configuration
S-	102	Device diagnostic message (PA): Sensor measuring range overshot S-102 Local display: S102	1 = 0x50 [1)]/0x78 [1)] 2 = UNCERTAIN 3 = Sensor conversion not accurate / Process related, no maintenance 4 = OK	Cause of error: Physical measuring range overshot. Remedy: Select suitable sensor type.	SV1, SV2, also PV1, PV2 depending on the configuration
S-	901	Device diagnostic message (PA): Ambient temperature too low S-901 Local display: S901	1 = 0x40 [1)]/0x78 [1)] 2 = UNCERTAIN 3 = Non specific / Process related, no maintenance 4 = OK	Cause of error: Reference temperature < −40 °C (−40 °F): parameter **Ambient alarm = On.** Remedy: Observe ambient temperature in accordance with specification.	SV1, SV2, PV1, PV2, RJ1, RJ2
S-	902	Device diagnostic message (PA): Ambient temperature too high S-902 Local display: S902	1 = 0x40 [1)]/0x78 [1)] 2 = UNCERTAIN 3 = Non specific / Process related, no maintenance 4 = OK	Cause of error: Reference temperature < +85 °C (+185 °F): parameter **Ambient alarm = On.** Remedy: Observe ambient temperature in accordance with specification.	SV1, SV2, PV1, PV2, RJ1, RJ2

1) See note → 🗎 47

9.4.4 Category C diagnostics code messages

Category	No.	Diagnostic messages ▪ In the Physical Block ▪ Diagnostic code ▪ Advanced diagnostics ▪ Local display	Sensor Transducer Block measured value status 1 = Status (Profile 3.01/3.02) 2 = Quality 3 = Substatus (Profile 3.01/3.02) 4 = Limits	Cause of error/remedy	Output variables affected
C-	402	Device diagnostic message (PA): Startup initialization C-402 Local display: C402 ↔ Measured value	1 = 0x4C [1)]/0x3C [1)] 2 = UNCERTAIN / BAD 3 = Init value / function check / local override 4 = OK	Cause of error: Device starting/initializing. Remedy: Message is only displayed during power-up.	SV1, SV2, PV1, PV2, RJ1, RJ2
C-	482	Device diagnostic message (PA): Simulation active C-482 Local display: C482 ↔ Measured value	1 = 0x70 [1)]/0x73(0x74) 2 = UNCERTAIN / BAD 3 =Init value / simulated value, start (end) 4 = OK	Cause of error: Simulation is active. Remedy: -	
C-	501	Device diagnostic message (PA): Device reset C-501 Local display: C501 ↔ Measured value	1 = 0x4C [1)]/0x7F 2 = UNCERTAIN 3 = Init value / - - 4 = OK	Cause of error: Device reset is performed. Remedy: Message is only displayed during a reset.	SV1, SV2, PV1, PV2, RJ1, RJ2

1) See note → 📄 47

The specified status can increase by the value 1 (low limit), 2 (high limit) or 3 (constant) due to a limit violation. The status value can increase as a result of a limit violation of the error directly displayed, or can be transferred from a low-priority error when more than one status occurs simultaneously.

Example:

	Quality (BAD)		Quality substatus				Limits		
Fault (F)	0	0	1	0	0	1	x	x	= 0x24 0x27

9.5 Corrosion monitoring

Sensor connection cable corrosion can lead to false measured value readings. Therefore the unit offers the possibility of detecting corrosion before a measured value is affected.

Corrosion monitoring is only possible for RTDs with a 4-wire connection and thermocouples.

Two different stages can be selected depending on the application requirements in the CORROSION_DETECTION parameter, see the "Operation via PROFIBUS® PA" section:

- Off = no corrosion monitoring
- On = Warning is displayed before the alarm value is reached – see table below. This allows preventive maintenance/troubleshooting to be performed. An alarm message is displayed after the alarm limit is reached.

The following table describes how the device behaves when the resistance in a sensor connection cable changes, depending on whether on or off is selected for the parameter.

RTD	< ≈ 2 kΩ	2 kΩ ≈ < x ≈ 3 kΩ	> ≈ 3 kΩ
off	---	No alarm	No alarm
on	---	WARNING (M-042)	ALARM (F-042)

TC	< ≈ 10 kΩ	10 kΩ ≈ < x ≈ 15 kΩ	> ≈ 15 kΩ
off	---	No alarm	No alarm
on	---	WARNING (M-042)	ALARM (F-042)

The sensor resistance can affect the resistance data in the table. If all the sensor connection cable resistances are increased at the same time, the values given in the table are halved.

The corrosion detection system presumes that this is a slow process with a continuous increase in the resistance.

9.6 Application errors without messages

9.6.1 Application errors for RTD connection

Symptoms	Cause	Action/remedy
Measured value is incorrect/ inaccurate	Incorrect sensor orientation	Install the sensor correctly
	Heat conducted by sensor	Observe the installed length of the sensor
	Device programming is incorrect (number of wires)	Change the **Connection type** device function
	Device programming is incorrect (scaling)	Change scaling
	Incorrect RTD configured	Change the **Characterization type** device function
	Sensor connection (2-wire), incorrect connection configuration compared to actual connection	Check the sensor connection/ configuration of the transmitter
	The cable resistance of the sensor (2-wire) was not compensated	Compensate the cable resistance
	Offset incorrectly set	Check offset
	Sensor defective	Check sensor
	RTD connection incorrect	Connect the connecting cables correctly; see the "Electrical connection" section
	Programming	Incorrect sensor type set in the **Characterization type** device function. Set the correct sensor type
	Device defective	Replace device

9.6.2 Application errors for TC connection

Symptoms	Cause	Action/remedy
Measured value is incorrect/ inaccurate	Incorrect sensor orientation	Install the sensor correctly
	Heat conducted by sensor	Observe the installed length of the sensor
	Device programming is incorrect (scaling)	Change scaling
	Incorrect thermocouple type (TC) configured	Change the **Characterization type** device function
	Incorrect reference junction set	See Section 13

Symptoms	Cause	Action/remedy
	Offset incorrectly set	Check offset
	Interference via the thermocouple wire welded in the thermowell (coupling of interference voltages)	Use a sensor where the thermocouple wire is not welded
	Sensor connected incorrectly	Connect the connecting cables correctly; see the "Electrical connection" section
	Sensor defective	Check sensor
	Programming	Incorrect sensor type set in the **Characterization type** device function; set the correct thermocouple (TC)
	Device defective	Replace device

10 Maintenance

10.1 Maintenance work

The device does not require specific maintenance work.

10.2 Cleaning of surfaces not in contact with the medium

- Recommendation: Use a lint-free cloth that is either dry or slightly dampened using water.
- Do not use any sharp objects or aggressive cleaning agents that corrode the surfaces (e.g. displays, housing) and seals.
- Do not use high-pressure steam.
- Observe the degree of protection of the device.

The cleaning agent used must be compatible with the materials of the device configuration. Do not use cleaning agents with concentrated mineral acids, bases or organic solvents.

11 Repair

11.1 General information

Due to its design, the device cannot be repaired.

11.2 Spare parts

Spare parts currently available for the product can be found online at: http://www.products.endress.com/spareparts_consumables, temperature transmitter: TMT84. Always quote the serial number of the device when ordering spare parts!

Type	Order number
Adapter for DIN rail mounting, DIN rail clip according to IEC 60715	51000856
Standard - DIN securing set (2 screws and springs, 4 shaft lock-down rings, 1 plug for the display interface)	71044061
US - M4 securing set (2 screws and 1 plug for the display interface)	71044062

11.3 Return

The requirements for safe device return in the event of service or disposal vary depending on the type of device and national legislation.

1. Refer to the web page for information: https://www.endress.com
2. Log in to the “My Endress+Hauser” customer portal, or register if you don’t have an account yet.
3. Enter the return request directly in the portal and submit all required information and documents.
4. If returning the device, pack the device in such a way that it is reliably protected against impact and external influences. The original packaging offers the best protection.
   ↳ Track the order's processing status online.

11.4 Disposal

If required by the Directive 2012/19/EU on waste electrical and electronic equipment (WEEE), the product is marked with the depicted symbol in order to minimize the disposal of WEEE as unsorted municipal waste. Do not dispose of products bearing this marking as unsorted municipal waste. Instead, return them to the manufacturer for disposal under the applicable conditions.

12 Accessories

The accessories currently available for the product can be selected at www.endress.com:

1. Select the product using the filters and search field.
2. Open the product page.
3. Select **Spare parts & Accessories**.

12.1 Device-specific accessories

Accessories		
Measured value display TID10 for iTEMP head transmitter, attachable		
Field housing TA30x for iTEMP head transmitter		
Adapter for DIN rail mounting, clip as per IEC 60715 (TH35) without securing screws		
Standard - DIN mounting kit (2 screws + springs, 4 securing disks and 1 display connector cover)		
US mounting set (2 M4 screws and 1 display connector cover)		
Fieldbus connector (PROFIBUS® PA):	Threaded connection ▪ M20x1.5 ▪ NPT ½" ▪ M20x1.5	Cable connection thread ▪ M12 ▪ M12 ▪ 7/8"

Accessory enclosed	
Wall mounting bracket, 316 L	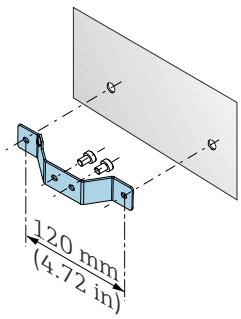
Pipe mounting bracket, 316 L	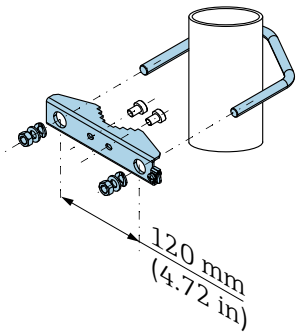

12.2 Communication-specific accessories

Commubox FXA195 USB/HART modem
Connects intrinsically safe 'smart transmitters' with a HART protocol to the USB interface of a laptop/PC. This enables the remote operation of the transmitters with FieldCare.

www.endress.com/fxa195

Commubox FXA291

Connects Endress+Hauser field devices with a CDI interface (= Endress+Hauser Common Data Interface) and the USB port of a computer or laptop.

For more information, please refer to: www.endress.com

Field Xpert SMT70B
Universal, high-performance tablet PC for device configuration
The tablet PC enables mobile plant asset management in hazardous and non-hazardous areas. It is suitable for commissioning and maintenance staff to manage field instruments

with a digital communication interface and to record progress. This tablet PC is designed as a comprehensive, all-in-one solution. With a pre-installed driver library, it is an easy-to-use, touch-sensitive tool which can be used to manage field instruments throughout their entire life cycle.

Technical Information TI01814S
www.endress.com/smt70b

12.3 Service-specific accessories

DeviceCare SFE100
DeviceCare is an Endress+Hauser configuration tool for field devices using the following communication protocols: HART, PROFIBUS DP/PA, FOUNDATION Fieldbus, IO/Link, Modbus, CDI and Endress+Hauser Common Data Interfaces.

www.endress.com/sfe100

FieldCare SFE500
FieldCare is a configuration tool for Endress+Hauser and third-party field devices based on DTM technology.
The following communication protocols are supported: HART, WirelessHART, PROFIBUS, FOUNDATION Fieldbus, Modbus, IO-Link, EtherNet/IP, PROFINET and PROFINET APL.

www.endress.com/sfe500

Netilion
With the Netilion IIoT ecosystem, Endress+Hauser enables the optimization of plant performance, digitization of workflows, sharing of knowledge and improved collaboration. Drawing upon decades of experience in process automation, Endress+Hauser offers the process industry an IIoT ecosystem designed to effortlessly extract insights from data. These insights allow process optimization, leading to increased plant availability, efficiency, reliability and ultimately a more profitable plant.

www.netilion.endress.com

12.4 Online tools

Product information about the entire life cycle of the device is available at:
www.endress.com/onlinetools

13 Technical data

13.1 Input

Measured variable	Temperature (temperature-linear transmission behavior), resistance and voltage.
Measuring range	Two independent sensors can be connected. The measuring inputs are not galvanically isolated from each other.

Resistance thermometer (RTD) as per standard	Designation	α	Measuring range limits
IEC 60751:2008	Pt100 (1) Pt200 (2) Pt500 (3) Pt1000 (4)	0.003851	−200 to 850 °C (−328 to 1 562 °F) −200 to 850 °C (−328 to 1 562 °F) −200 to 250 °C (−328 to 482 °F) −200 to 250 °C (−328 to 482 °F)
JIS C1604:1984	Pt100 (5)	0.003916	−200 to 649 °C (−328 to 1 200 °F)
DIN 43760 IPTS-68	Ni100 (6) Ni1000	0.006180	−60 to 250 °C (−76 to 482 °F) −60 to 150 °C (−76 to 302 °F)
Edison Copper Winding No. 15	Cu10	0.004274	−100 to 260 °C (−148 to 500 °F)
Edison Curve	Ni120	0.006720	−70 to 270 °C (−94 to 518 °F)
GOST 6651-94	Pt50 (8) Pt100 (9)	0.003910	−200 to 1 100 °C (−328 to 2 012 °F) −200 to 850 °C (−328 to 1 562 °F)
OIML R84: 2003 GOST 6651-2009	Cu50 (10) Cu100 (11)	0.004280	−200 to 200 °C (−328 to 392 °F)
-	Pt100 (Callendar van Dusen) Nickel polynomial Copper polynomial	-	10 to 400 Ω, 10 to 2 000 Ω 10 to 400 Ω, 10 to 2 000 Ω 10 to 400 Ω, 10 to 2 000 Ω
	▪ Connection type: 2-wire, 3-wire or 4-wire connection, sensor current: ≤ 0.3 mA ▪ with 2-wire circuit, compensation of the wire resistance is possible (0 to 30 Ω) ▪ With 3-wire and 4-wire connection, sensor wire resistance up to max. 50 Ω per wire		
Resistance transmitter	Resistance Ω		10 to 400 Ω 10 to 2 000 Ω

Thermocouples as per standard	Designation	Measuring range limits	
IEC 60584, Part 1	Type A (W5Re-W20Re) (30) Type B (PtRh30-PtRh6) (31) Type E (NiCr-CuNi) (34) Type J (Fe-CuNi) (35) Type K (NiCr-Ni) (36) Type N (NiCrSi-NiSi) (37) Type R (PtRh13-Pt) (38) Type S (PtRh10-Pt) (39) Type T (Cu-CuNi) (40)	0 to 2 500 °C (32 to 4 532 °F) 40 to 1 820 °C (104 to 3 308 °F) −270 to 1 000 °C (−454 to 1 832 °F) −210 to 1 200 °C (−346 to 2 192 °F) −270 to 1 372 °C (−454 to 2 501 °F) −270 to 1 300 °C (−454 to 2 372 °F) −50 to 1 768 °C (−58 to 3 214 °F) −50 to 1 768 °C (−58 to 3 214 °F) −260 to 400 °C (−436 to 752 °F)	Recommended temperature range: 0 to 2 500 °C (32 to 4 532 °F) 500 to 1 820 °C (932 to 3 308 °F) −150 to 1 000 °C (−238 to 1 832 °F) −150 to 1 200 °C (−238 to 2 192 °F) −150 to 1 200 °C (−238 to 2 192 °F) −150 to 1 300 °C (−238 to 2 372 °F) 50 to 1 768 °C (122 to 3 214 °F) 50 to 1 768 °C (122 to 3 214 °F) −150 to 400 °C (−238 to 752 °F)
IEC 60584, Part 1; ASTM E988-96	Type C (W5Re-W26Re) (32)	0 to 2 315 °C (32 to 4 199 °F)	0 to 2 000 °C (32 to 3 632 °F)
ASTM E988-96	Type D (W3Re-W25Re) (33)	0 to 2 315 °C (32 to 4 199 °F)	0 to 2 000 °C (32 to 3 632 °F)
DIN 43710	Type L (Fe-CuNi) (41) Type U (Cu-CuNi) (42)	−200 to 900 °C (−328 to 1 652 °F) −200 to 600 °C (−328 to 1 112 °F)	−150 to 900 °C (−238 to 1 652 °F) −150 to 600 °C (−238 to 1 112 °F)
GOST R8.585-2001	Type L (NiCr-CuNi) (43)	−200 to 800 °C (−328 to 1 472 °F)	−200 to 800 °C (328 to 1 472 °F)

Thermocouples as per standard	Designation	Measuring range limits
	▪ Internal reference junction (Pt100) ▪ External preset value: configurable value −40 to 85 °C (−40 to 185 °F) ▪ Maximum sensor wire resistance 10 kΩ (If the sensor wire resistance is greater than 10 kΩ, an error message is output in accordance with NAMUR NE89.)	
Voltage transmitter (mV)	Millivolt transmitter (mV)	−20 to 100 mV −5 to 30 mV

Type of input

The following connection combinations are possible when both sensor inputs are assigned:

		Sensor input 1			
		RTD or resistance transmitter, 2-wire	**RTD or resistance transmitter, 3-wire**	**RTD or resistance transmitter, 4-wire**	**Thermocouple (TC), voltage transmitter**
Sensor input 2	**RTD or resistance transmitter, 2-wire**	☑	☑	-	☑
	RTD or resistance transmitter, 3-wire	☑	☑	-	☑
	RTD or resistance transmitter, 4-wire	-	-	-	-
	Thermocouple (TC), voltage transmitter	☑	☑	☑	☑

Input signal

Input data: The device is able to receive a cyclic value and its status sent by a PROFIBUS® master. This value can be read acyclically.

13.2 Output

Output signal

- PROFIBUS® PA as per EN 50170 volume 2, IEC 61158-2 (MBP), galvanically isolated
  Addition 2 "Condensed status and diagnostic messages"
  Addition 3 "Identification and Maintenance Functions"
- Error current FDE (Fault Disconnection Electronic) = 0 mA
- Data transmission rate, supported baudrate: 31.25 kBit/s
- Signal encoding = Manchester II
- Output data:
  Available values via AI blocks: Temperature (PV), temp. sensor 1 + 2, terminal temperature
- The transmitter is always operated as a slave in a control system and, depending on the application, enables data exchange with one or more masters.
- According to IEC 60079-27, FISCO/FNICO

Failure information

Status messages and alarms in accordance with PROFIBUS® PA Profile 3.01/3.02 specification

Transmission behavior

Temperature-linear, resistance-linear, voltage-linear

Filters

50/60 Hz

Galvanic isolation

U = 2 kV AC for 1 minute (input/output)

Switch-on delay	8 s

PROFIBUS® PA basic data

Manufacturer-specific ID no.:	Profile 3.0 ID No.:	Manufacturer-specific GSD
1551 (hex)	9700 (hex) 9701 (hex) 9702 (hex) 9703 (hex)	EH021551.gsd (Profile 3.01 EH3x1551.gsd)
Profile 3.0 GSD	Device or bus address	Bitmaps
Pa139700.gsd Pa139701.gsd Pa139702.gsd Pa139703.gsd	126 (default)	EH_1551_d.bmp EH_1551_n.bmp EH_1551_s.bmp

If the iTEMP TMT84 is in compatibility mode, the device reports with the manufacturer-specific ID No. 1523 (hex) – iTEMP TMT184 during cyclic data traffic.

Brief description of the blocks

Physical Block

The Physical Block contains all the data that clearly identify and distinguish the device. It is an electronic version of a nameplate on the device. In addition to parameters needed to operate the device on the fieldbus, the Physical Block provides information such as order code, device ID, hardware revision, software revision, device release etc. The Physical Block can also be used to configure the display.

Transducer Block "Sensor 1" and "Sensor 2"

The Transducer Blocks of the head transmitter contain all the measurement-specific and device-specific parameters which are relevant for the measurement of the input variables.

Analog Input

In the Analog Input Function Block, the process variables from the Transducer Blocks are prepared for subsequent automation functions in the control system (e.g. scaling, limit value processing).

13.3 Power supply

Supply voltage	U = 9 to 32 V DC, polarity-independent (max. voltage U_b = 35 V)
Current consumption	≤ 11 mA

Electrical connection

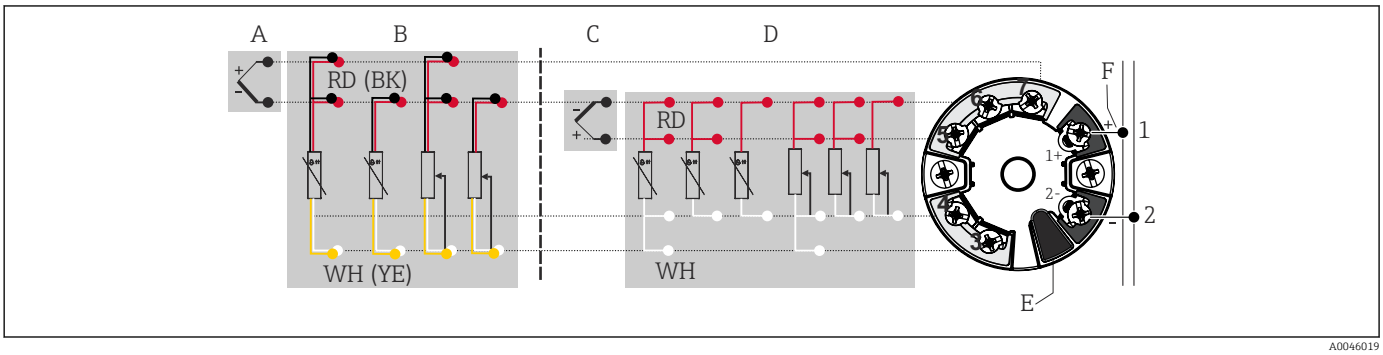

14 *Assignment of terminal connections*

A Sensor input 1, RTD and Ω, 2-, 3- and 4-wire
B Sensor input 1, TC and mV
C Sensor input 2, RTD and Ω, 2- and 3-wire
D Sensor input 2, TC and mV
E Display connection, service interface
F Bus connector and power supply

Terminals

Choice of screw terminals or push-in terminals for sensor and power supply cables:

Terminal version	Cable version	Cable cross-section
Screw terminals (with tabs on the fieldbus terminals for easy connection of a handheld terminal, e.g. FieldXpert, FC475, Trex)	Rigid or flexible	≤ 2.5 mm² (14 AWG)
Push-in terminals (cable design, stripping length = min. 10 mm (0.39 in)	Rigid or flexible	0.2 to 1.5 mm² (24 to 16 AWG)
	Flexible with wire end ferrules with/without plastic ferrule	0.25 to 1.5 mm² (24 to 16 AWG)

Ferrules must be used with push-in terminals and when using flexible cables with a cable cross-section of ≤ 0.3 mm². Otherwise, the use of ferrules when connecting flexible cables to push-in terminals is not recommended.

13.4 Performance characteristics

Response time

1s per channel

Reference operating conditions

- Calibration temperature: 25 °C ±5 K (77 °F ±9 °F)
- Supply voltage: 24 V DC
- 4-wire circuit for resistance adjustment

Maximum measurement error	In accordance with EN IEC 62828 and the reference operating conditions specified above. The measurement error data corresponds to ±2σ (Gaussian distribution). The data includes non-linearities and repeatability.

Typically

Standard	Designation	Measuring range	Typical measurement error (±)
Resistance thermometer (RTD) as per standard			Digital [1]
IEC 60751:2008	Pt100 (1)	0 to 200 °C (32 to 392 °F)	0.08 °C (0.14 °F)
IEC 60751:2008	Pt1000 (4)		0.08 K (0.14 °F)
GOST 6651-94	Pt100 (9)		0.07 °C (0.13 °F)
Thermocouples (TC) as per standard			Digital value [1]
IEC 60584, Part 1	Type K (NiCr-Ni) (36)	0 to 800 °C (32 to 1 472 °F)	0.31 °C (0.56 °F)
IEC 60584, Part 1	Type S (PtRh10-Pt) (39)		0.84 °C (1.51 °F)
GOST R8.585-2001	Type L (NiCr-CuNi) (43)		2.18 °C (3.92 °F)

1) Measured value transmitted via FIELDBUS®.

Measurement error for resistance thermometers (RTD) and resistance transmitters

Standard	Designation	Measuring range	Measurement error (±)	Non-repeatability: ±
			Digital [1]	
			Based on measured value [2]	
IEC 60751:2008	Pt100 (1)	−200 to 850 °C (−328 to 1 562 °F)	0.06 °C (0.11 °F) + 0.006% * (MV - LRV)	≤ 0.05 °C (0.09 °F)
	Pt200 (2)		0.11 °C (0.2 °F) + 0.018% * (MV - LRV)	≤ 0.13 °C (0.23 °F)
	Pt500 (3)	−200 to 250 °C (−328 to 482 °F)	0.05 °C (0.09 °F) + 0.015% * (MV - LRV)	≤ 0.08 °C (0.14 °F)
	Pt1000 (4)	−200 to 250 °C (−328 to 482 °F)	0.03 °C (0.05 °F) + 0.013% * (MV - LRV)	≤ 0.05 °C (0.09 °F)
JIS C1604:1984	Pt100 (5)	−200 to 649 °C (−328 to 1 200 °F)	0.05 °C (0.09 °F) + 0.006% * (MV - LRV)	≤ 0.04 °C (0.07 °F)
GOST 6651-94	Pt50 (8)	−200 to 1 100 °C (−328 to 2 012 °F)	0.10 °C (0.18 °F) + 0.008% * (MV - LRV)	≤ 0.11 °C (0.2 °F)
	Pt100 (9)	−200 to 850 °C (−328 to 1 562 °F)	0.05 °C (0.09 °F) + 0.006% * (MV - LRV)	≤ 0.05 °C (0.09 °F)
DIN 43760 IPTS-68	Ni100 (6)	−60 to 250 °C (−76 to 482 °F)	0.05 °C (0.09 °F) - 0.006% * (MV - LRV)	≤ 0.03 °C (0.05 °F)
	Ni1000	−60 to 150 °C (−76 to 302 °F)		
OIML R84: 2003 / GOST 6651-2009	Cu50 (10)	−200 to 200 °C (−328 to 1 562 °F)	0.09 °C (0.16 °F) + 0.006% * (MV - LRV)	≤ 0.05 °C (0.09 °F)
	Cu100 (11)		0.05 °C (0.09 °F) + 0.003% * (MV - LRV)	≤ 0.04 °C (0.07 °F)
Resistance transmitter	Resistance Ω	10 to 400 Ω	max. 32 mΩ	15mΩ
		10 to 2 000 Ω	max. 300 mΩ	≤ 200mΩ

1) Measured value transmitted via FIELDBUS®.
2) Deviations from maximum measurement error possible due to rounding.

Measurement error for thermocouples (TC) and voltage transmitters

Standard	Designation	Measuring range	Measurement error (±)	Non-repeatability: ±
			Digital [1]	
			Based on measured value [2]	
IEC 60584-1	Type A (30)	0 to 2 500 °C (32 to 4 532 °F)	0.8 °C (1.44 °F) + 0.021% * MV	≤ 0.52 °C (0.94 °F)
	Type B (31)	500 to 1 820 °C (932 to 3 308 °F)	1.5 °C (2.7 °F) - 0.06% * (MV - LRV)	≤ 0.67 °C (1.21 °F)
IEC 60584-1 / ASTM E988-96	Type C (32)	0 to 2 000 °C (32 to 3 632 °F)	0.55 °C (1 °F) + 0.0055% * MV	≤ 0.33 °C (0.59 °F)
ASTM E988-96	Type D (33)		0.75 °C (1.44 °F) - 0.008% * MV	≤ 0.41 °C (0.74 °F)
IEC 60584-1	Type E (34)	−150 to 1 000 °C (−238 to 2 192 °F)	0.22 °C (0.40 °F) - 0.006% * (MV - LRV)	≤ 0.07 °C (0.13 °F)
	Type J (35)	−150 to 1 200 °C (−238 to 2 192 °F)	0.27 °C (0.49 °F) - 0.005% * (MV - LRV)	≤ 0.08 °C (0.14 °F)
	Type K (36)		0.35 °C (0.63 °F) - 0.005% * (MV - LRV)	≤ 0.11 °C (0.20 °F)
	Type N (37)	−150 to 1 300 °C (−238 to 2 372 °F)	0.48 °C (0.86 °F) - 0.014% * (MV - LRV)	≤ 0.16 °C (0.29 °F)
	Type R (38)	150 to 1 768 °C (302 to 3 214 °F)	0.9 °C (1.62 °F) - 0.015% * MV	≤ 0.76 °C (1.37 °F)
	Type S (39)		0.95 °C (1.71 °F) - 0.013% * MV	≤ 0.74 °C (1.33 °F)
	Type T (40)	−150 to 400 °C (−238 to 752 °F)	0.36 °C (0.47 °F) - 0.04% * (MV - LRV)	≤ 0.11 °C (0.20 °F)
DIN 43710	Type L (41)	−150 to 900 °C (−238 to 1 652 °F)	0.29 °C (0.52 °F) - 0.009% * (MV - LRV)	≤ 0.07 °C (0.13 °F)
	Type U (42)	−150 to 600 °C (−238 to 1 112 °F)	0.33 °C (0.6 °F) - 0.028% * (MV - LRV)	≤ 0.10 °C (0.18 °F)
GOST R8.585-2001	Type L (43)	−200 to 800 °C (−328 to 1 472 °F)	2.2 °C (4.00 °F) - 0.015% * (MV - LRV)	≤ 0.15 °C (0.27 °F)
Voltage transmitter (mV)		−20 to 100 mV	≤ 10 µV	4 µV

1) Measured value transmitted via fieldbus.
2) Deviations from maximum measurement error possible due to rounding.

MV = measured value

LRV = lower range value of the sensor in question

Total measurement error of transmitter at current output = √(Measurement error digital² + Measurement error D/A²)

Sample calculation with Pt100, measuring range 0 to 200 °C (32 to 392 °F), ambient temperature 25 °C (77 °F), supply voltage 24 V:

Measurement error = 0.06 °C+ 0.006% x (200 °C - (-200 °C)):	0.084 °C (0.151 °F)

Sample calculation with Pt100, measuring range 0 to 200 °C (32 to 392 °F), ambient temperature 35 °C (95 °F), supply voltage 30 V:

Measurement error = 0.06 °C+ 0.006% x (200 °C - (-200 °C)):	0.084 °C (0.151 °F)
Influence of ambient temperature = (35 - 25) x (0.002% x 200 °C - (-200 °C)), at least 0.005 °C	0.08 °C (0.144 °F)
Influence of supply voltage = (30 - 24) x (0.002% x 200 °C - (-200 °C)), at least 0.005 °C	0.048 °C (0.086 °F)
Measurement error: √(Measurement error² + Influence of ambient temperature² + Influence of supply voltage²)	**0.126 °C (0.227 °F)**

Resolution

Resolution of A/D converter = 18 bit

Sensor adjustment

Sensor transmitter matching

RTD sensors are one of the most linear temperature measuring elements. Nevertheless, the output must be linearized. To significantly improve temperature measurement accuracy, the device allows the use of two methods:

- Callendar van Dusen coefficients (Pt100 resistance thermometer)
  The Callendar van Dusen equation is described as:
  $R_T = R_0[1+AT+BT^2+C(T-100)T^3]$

  The coefficients A, B and C are used to match the sensor (platinum) and transmitter in order to improve the accuracy of the measuring system. The coefficients for a standard sensor are specified in IEC 751. If no standard sensor is available or if greater accuracy is required, the coefficients for each sensor can be determined specifically with the aid of sensor calibration.

- Linearization for copper/nickel resistance thermometers (RTD)
  The polynomial equation for copper/nickel is as follows:
  $R_T = R_0(1+AT+BT^2)$

  The coefficients A and B are used for the linearization of nickel or copper resistance thermometers (RTD). The exact values of the coefficients derive from the calibration data and are specific to each sensor. The sensor-specific coefficients are then sent to the transmitter.

Sensor-transmitter matching using one of the methods mentioned above significantly improves the temperature measurement accuracy of the entire system. This is because the transmitter uses the specific data pertaining to the connected sensor to calculate the measured temperature, instead of using the standardized sensor curve data.

Operating influences

The measurement error data correspond to ±2 σ (Gaussian distribution).

Influence of ambient temperature and supply voltage on operation for resistance thermometers (RTD) and resistance transmitters

Designation	Standard	Ambient temperature: Influence (±) per 1 °C (1.8 °F) change	Supply voltage: Influence (±) per V change
		Digital [1)]	Digital [1)]
		Based on measured value	Based on measured value
Pt100 (1)	IEC 60751:2008	0.002% * (MV -LRV), at least 0.005 °C (0.009 °F)	0.002% * (MV -LRV), at least 0.005 °C (0.009 °F)
Pt200 (2)		≤ 0.026 °C (0.047 °F)	≤ 0.026 °C (0.047 °F)

Designation	Standard	Ambient temperature: Influence (±) per 1 °C (1.8 °F) change	Supply voltage: Influence (±) per V change
Pt500 (3)		0.002% * (MV -LRV), at least 0.009 °C (0.016 °F)	0.002% * (MV -LRV), at least 0.009 °C (0.016 °F)
Pt1000 (4)		0.002% * (MV -LRV), at least 0.004 °C (0.007 °F)	0.002% * (MV -LRV), at least 0.004 °C (0.007 °F)
Pt100 (5)	JIS C1604:1984	0.002% * (MV -LRV), at least 0.005 °C (0.009 °F)	0.002% * (MV -LRV), at least 0.005 °C (0.009 °F)
Pt50 (8)	GOST 6651-94	0.002% * (MV -LRV), at least 0.01 °C (0.018 °F)	0.002% * (MV -LRV), at least 0.01 °C (0.018 °F)
Pt100 (9)		0.002% * (MV -LRV), at least 0.005 °C (0.009 °F)	0.002% * (MV -LRV), at least 0.005 °C (0.009 °F)
Ni100 (6)	DIN 43760 IPTS-68	≤ 0.005 °C (0.009 °F)	≤ 0.005 °C (0.009 °F)
Ni1000		≤ 0.005 °C (0.009 °F)	≤ 0.005 °C (0.009 °F)
Cu50 (10)	OIML R84: 2003 / GOST 6651-2009	≤ 0.008 °C (0.014 °F)	≤ 0.008 °C (0.014 °F)
Cu100 (11)		0.002% * (MV -LRV), at least 0.004 °C (0.007 °F)	0.002% * (MV -LRV), at least 0.004 °C (0.007 °F)
Resistance transmitter (Ω)			
10 to 400 Ω		0.0015% * (MV -LRV), at least 1.5 mΩ	0.0015% * (MV -LRV), at least 1.5 mΩ
10 to 2 000 Ω		0.0015% * (MV -LRV), at least 15 mΩ	0.0015% * (MV -LRV), at least 15 mΩ

1) Measured value transmitted via fieldbus.

Influence of ambient temperature and supply voltage on operation for thermocouples (TC) and voltage transmitters

Designation	Standard	Ambient temperature: Influence (±) per 1 °C (1.8 °F) change	Supply voltage: Influence (±) per V change
		Digital [1]	Digital
		Based on measured value	Based on measured value
Type A (30)	IEC 60584-1	0.0055% * MV, at least 0.03 °C (0.005 °F)	0.0055% * MV, at least 0.03 °C (0.005 °F)
Type B (31)		≤ 0.06 °C (0.11 °F)	≤ 0.06 °C (0.11 °F)
Type C (32)	IEC 60584-1 / ASTM E988-96	0.0045% * MV, at least 0.03 °C (0.005 °F)	0.0045% * MV, at least 0.03 °C (0.005 °F)
Type D (33)	ASTM E988-96	0.004% * MV, at least 0.035 °C (0.063 °F)	0.004% * MV, at least 0.035 °C (0.063 °F)
Type E (34)	IEC 60584-1	0.003% * (MV -LRV), at least 0.016 °C (0.029 °F)	0.003% * (MV -LRV), at least 0.016 °C (0.029 °F)
Type J (35)		0.0028% * (MV -LRV), at least 0.02 °C (0.036 °F)	0.0028% * (MV -LRV), at least 0.02 °C (0.036 °F)
Type K (36)		0.003% * (MV -LRV), at least 0.013 °C (0.023 °F)	0.003% * (MV -LRV), at least 0.013 °C (0.023 °F)
Type N (37)		0.0028% * (MV -LRV), at least 0.020 °C (0.036 °F)	0.0028% * (MV -LRV), at least 0.020 °C (0.036 °F)
Type R (38)		0.0035% * MV, at least 0.047 °C (0.085 °F)	0.0035% * MV, at least 0.047 °C (0.085 °F)
Type S (39)		≤ 0.05 °C (0.09 °F)	≤ 0.05 °C (0.09 °F)
Type T (40)		≤ 0.01 °C (0.02 °F)	≤ 0.01 °C (0.02 °F)
Type L (41)	DIN 43710	≤ 0.02 °C (0.04 °F)	≤ 0.02 °C (0.04 °F)

Designation	Standard	Ambient temperature: Influence (±) per 1 °C (1.8 °F) change	Supply voltage: Influence (±) per V change
Type U (42)		≤ 0.01 °C (0.02 °F)	≤ 0.01 °C (0.02 °F)
Type L (43)	GOST R8.585-2001	≤ 0.02 °C (0.04 °F)	≤ 0.02 °C (0.04 °F)
Voltage transmitter (mV)			
−20 to 100 mV	-	≤ 3 µV	≤ 3 µV

1) Measured value transmitted via fieldbus.

MV = measured value

LRV = lower range value of the sensor in question

Total measurement error of transmitter at current output = √(Measurement error digital² + Measurement error D/A²)

Long-term drift, resistance thermometers (RTD) and resistance transmitters

Designation	Standard	Long-term drift (±)		
		after 1 year	after 3 years	after 5 years
		Maximum		
Pt100 (1)	IEC 60751:2008	≤ 0.03 °C (0.05 °F) + 0.024% * span	≤ 0.042 °C (0.076 °F) + 0.035% * span	≤ 0.051 °C (0.092 °F) + 0.037% * span
Pt200 (2)		≤ 0.17 °C (0.31 °F) + 0.016% * span	≤ 0.28 °C (0.5 °F) + 0.022% * span	≤ 0.343 °C (0.617 °F) + 0.025% * span
Pt500 (3)		≤ 0.067 °C (0.121 °F) + 0.018% * span	≤ 0.111 °C (0.2 °F) + 0.025% * span	≤ 0.137 °C (0.246 °F) + 0.028% * span
Pt1000 (4)		≤ 0.034 °C (0.06 °F) + 0.02% * span	≤ 0.056 °C (0.1 °F) + 0.029% * span	≤ 0.069 °C (0.124 °F) + 0.032% * span
Pt100 (5)	JIS C1604:1984	≤ 0.03 °C (0.054 °F) + 0.022% * span	≤ 0.042 °C (0.076 °F) + 0.032% * span	≤ 0.051 °C (0.092 °F) + 0.034% * span
Pt50 (8)	GOST 6651-94	≤ 0.055 °C (0.01 °F) + 0.023% * span	≤ 0.089 °C (0.16 °F) + 0.032% * span	≤ 0.1 °C (0.18 °F) + 0.035% * span
Pt100 (9)	GOST 6651-94	≤ 0.03 °C (0.054 °F) + 0.024% * span	≤ 0.042 °C (0.076 °F) + 0.034% * span	≤ 0.051 °C (0.092 °F) + 0.037% * span
Ni100 (6)	DIN 43760 IPTS-68	≤ 0.025 °C (0.045 °F) + 0.016% * span	≤ 0.042 °C (0.076 °F) + 0.02% * span	≤ 0.047 °C (0.085 °F) + 0.021% * span
Ni1000	DIN 43760 IPTS-68	≤ 0.02 °C (0.036 °F) + 0.018% * span	≤ 0.032 °C (0.058 °F) + 0.024% * span	≤ 0.036 °C (0.065 °F) + 0.025% * span
Cu50 (10)	OIML R84:2003 / GOST 6651-2009	≤ 0.053 °C (0.095 °F) + 0.013% * span	≤ 0.084 °C (0.151 °F) + 0.016% * span	≤ 0.094 °C (0.169 °F) + 0.016% * span
Cu100 (11)		≤ 0.027 °C (0.049 °F) + 0.019% * span	≤ 0.042 °C (0.076 °F) + 0.026% * span	≤ 0.047 °C (0.085 °F) + 0.027% * span
Resistance transmitter				
10 to 400 Ω	-	≤ 10 mΩ + 0.022% * span	≤ 14 mΩ + 0.031% * span	≤ 16 mΩ + 0.033% * span
10 to 2 000 Ω	-	≤ 144 mΩ + 0.019% * span	≤ 238 mΩ + 0.026% * span	≤ 294 mΩ + 0.028% * span

Long-term drift, thermocouples (TC) and voltage transmitters

Designation	Standard	Long-term drift (±)		
		after 1 year	after 3 years	after 5 years
		Maximum		

Designation	Standard	Long-term drift (±)		
Type A (30)	IEC 60584-1	≤ 0.17 °C (0.306 °F) + 0.021% * span	≤ 0.27 °C (0.486 °F) + 0.03% * span	≤ 0.38 °C (0.683 °F) + 0.035% * span
Type B (31)		≤ 0.5 °C (0.9 °F)	≤ 0.75 °C (1.35 °F)	≤ 1.0 °C (1.8 °F)
Type C (32)	IEC 60584-1 / ASTM E988-96	≤ 0.15 °C (0.27 °F) + 0.018% * span	≤ 0.24 °C (0.43 °F) + 0.026% * span	≤ 0.34 °C (0.61 °F) + 0.027% * span
Type D (33)	ASTM E988-96	≤ 0.21 °C (0.38 °F) + 0.015% * span	≤ 0.34 °C (0.61 °F) + 0.02% * span	≤ 0.47 °C (0.85 °F) + 0.02% * span
Type E (34)	IEC 60584-1	≤ 0.06 °C (0.11 °F) + 0.018% * span	≤ 0.09 °C (0.162 °F) + 0.025% * span	≤ 0.13 °C (0.234 °F) + 0.026% * span
Type J (35)	IEC 60584-1	≤ 0.06 °C (0.11 °F) + 0.019% * span	≤ 0.1 °C (0.18 °F) + 0.025% * span	≤ 0.14 °C (0.252 °F) + 0.027% * span
Type K (36)		≤ 0.09 °C (0.162 °F) + 0.017% * (MV+ 150 °C (270 °F))	≤ 0.14 °C (0.252 °F) + 0.023% * span	≤ 0.19 °C (0.342 °F) + 0.024% * span
Type N (37)	IEC 60584-1	≤ 0.13 °C (0.234 °F) + 0.015% * (MV + 150 °C (270 °F))	≤ 0.2 °C (0.36 °F) + 0.02% * span	≤ 0.28 °C (0.5 °F) + 0.02% * span
Type R (38)		≤ 0.31 °C (0.558 °F) + 0.011% * (MV- 50 °C (90 °F))	≤ 0.5 °C (0.9 °F) + 0.013% * span	≤ 0.69 °C (1.241 °F) + 0.011% * span
Type S (39)	IEC 60584-1	≤ 0.31 °C (0.558 °F) + 0.011% * span	≤ 0.5 °C (0.9 °F) + 0.013% * span	≤ 0.7 °C (1.259 °F) + 0.011% * span
Type T (40)		≤ 0.09 °C (0.162 °F) + 0.011% * span	≤ 0.15 °C (0.27 °F) + 0.013% * span	≤ 0.2 °C (0.36 °F) + 0.012% * span
Type L (41)		≤ 0.06 °C (0.108 °F) + 0.017% * span	≤ 0.1 °C (0.18 °F) + 0.022% * span	≤ 0.14 °C (0.252 °F) + 0.022% * span
Type U (42)		≤ 0.09 °C (0.162 °F) + 0.013% * span	≤ 0.14 °C (0.252 °F) + 0.017% * span	≤ 0.2 °C (0.360 °F) + 0.015% * span
Type L (43)	GOST R8.585-2001	≤ 0.08 °C (0.144 °F) + 0.015% * span	≤ 0.12 °C (0.216 °F) + 0.02% * span	≤ 0.17 °C (0.306 °F) + 0.02% * span
Voltage transmitter (mV)				
−20 to 100 mV	-	≤ 2 µV + 0.022% * span	≤ 3.5 µV + 0.03% * span	≤ 4.7 µV + 0.033% * span

Influence of reference junction	Pt100 DIN IEC 60751 Cl. B (internal reference junction with thermocouples TC)

13.5 Environment

Ambient temperature range	−40 to 85 °C (−40 to 185 °F), for hazardous areas, see Ex documentation
Storage temperature	−40 to 100 °C (−40 to 212 °F)
Relative humidity	▪ Condensation permitted as per IEC 60 068-2-33 ▪ Max. rel. humidity: 95% as per IEC 60068-2-30
Altitude	Up to 4 000 m (13 123 ft) above mean sea level in accordance with IEC 61010-1, CAN/CSA C22.2 No. 61010-1
Climate class	C as per EN 60654-1

Degree of protection	▪ Head transmitter with screw or push-in terminals: IP 20. In the installed state, it depends on the terminal head or field housing used. ▪ When installing in field housing TA30A, TA30D or TA30H: IP 66/67 (NEMA Type 4x encl.)
Shock and vibration resistance	Vibration resistance as per IEC 60068-2-6: 10 to 2 000 Hz at 5g (increased vibration stress)
Electromagnetic compatibility (EMC)	**CE compliance** Electromagnetic compatibility in accordance with all the relevant requirements of the IEC/EN 61326 series and NAMUR Recommendation EMC (NE21). For details, refer to the Declaration of Conformity. Maximum measurement error <1% of measuring range. Interference immunity as per IEC/EN 61326 series, industrial requirements Interference emission as per IEC/EN 61326 series, Class B equipment
Overvoltage category	Measuring category II as per IEC 61010-1. The measuring category is provided for measuring on power circuits that are directly connected electrically with the low-voltage network.
Pollution level	Pollution degree 2 as per IEC 61010-1.

13.6 Mechanical construction

Design and dimensions	Dimensions in mm (in) *Head transmitter*

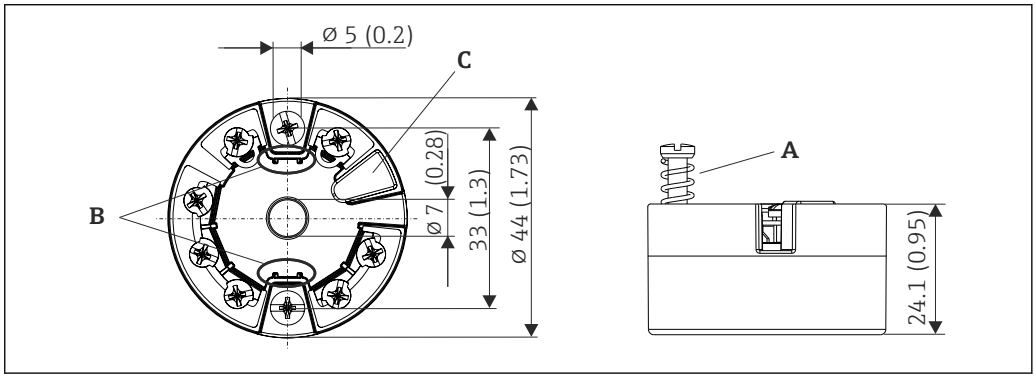

15 Version with screw terminals

A Spring travel L ≥ 5 mm (not for US - M4 securing screws)
B Mounting elements for attachable measured value display TID10
C Service interface for connecting measured value display or configuration tool

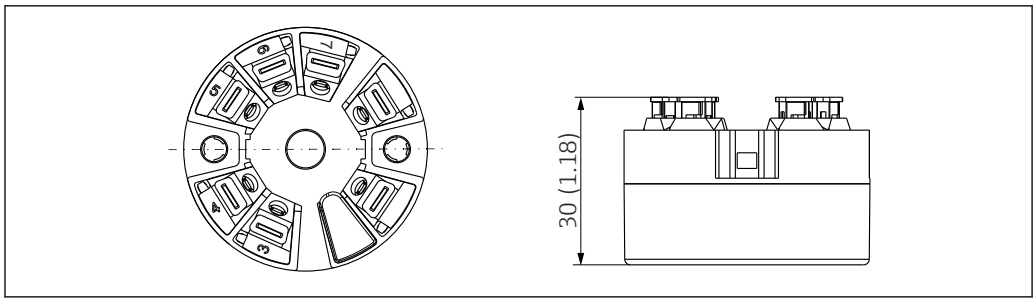

16 Version with push-in terminals. Dimensions are identical to the version with screw terminals, apart from housing height.

Field housing

All field housings have an internal geometry in accordance with DIN EN 50446, Form B (flat face). Cable glands in the diagrams: M20x1.5

Maximum ambient temperatures for cable glands	
Type	**Temperature range**
Polyamide cable gland ½" NPT, M20x1.5 (non-Ex)	−40 to 100 °C (−40 to 212 °F)
Polyamide cable gland M20x1.5 (for dust ignition-proof area)	−20 to 95 °C (−4 to 203 °F)
Brass cable gland ½" NPT, M20x1.5 (for dust ignition-proof area)	−20 to 130 °C (−4 to 266 °F)

Maximum ambient temperatures for fieldbus connectors	
Type	**Temperature range**
Fieldbus connector (M12x1 PA, 7/8" PA, 7/8" FF)	−40 to 105 °C (−40 to 221 °F)

TA30A	Specification
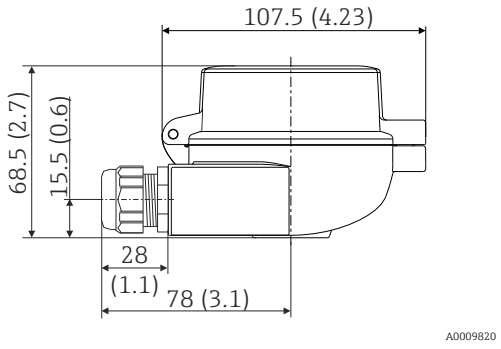	▪ Two cable entries ▪ Material: aluminum, polyester powder coated Seals: silicone ▪ Degree of protection: ▪ IP66/68 (NEMA Type 4x encl.) ▪ For ATEX: IP66/67 ▪ Cable entry glands: NPT ½" and M20x1.5 ▪ Head color: blue, RAL 5012 ▪ Cap color: gray, RAL 7035 ▪ Weight: 330 g (11.64 oz)

TA30A with display window in cover	Specification
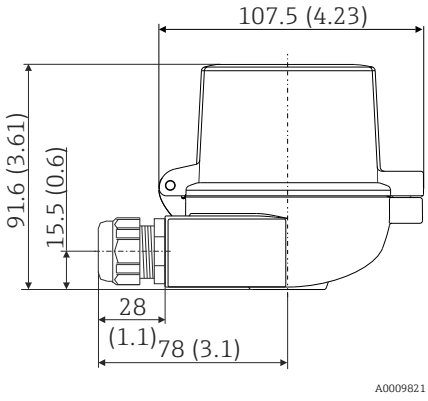	▪ Two cable entries ▪ Material: aluminum, polyester powder coated Seals: silicone ▪ Protection degree: ▪ IP66/68 (NEMA Type 4x encl.) ▪ For ATEX: IP66/67 ▪ Cable entry glands: NPT ½" and M20x1.5 ▪ Head color: blue, RAL 5012 ▪ Cap color: gray, RAL 7035 ▪ Weight: 420 g (14.81 oz) ▪ Display window: single-pane safety glass according to DIN 8902 ▪ Display window in cover for head transmitter with TID10 display

TA30H	Specification
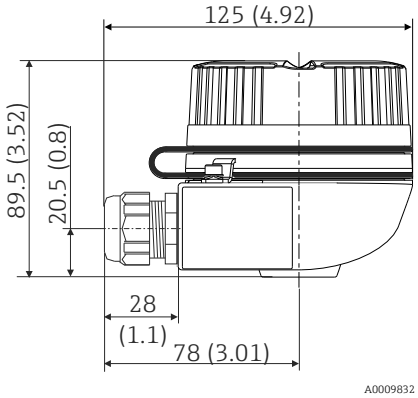	▪ Flameproof (XP) version, explosion-protected, captive screw cap, with two cable entries ▪ Degree of protection: IP 66/68, NEMA Type 4x Encl. Ex-version: IP 66/67 ▪ Material: ▪ Aluminum, with polyester powder coating ▪ Stainless steel 316L without coating ▪ Dry lubricant Klüber Syntheso Glep 1 ▪ Cable entry glands: NPT ½", M20x1.5 ▪ Color of aluminum head: blue, RAL 5012 ▪ Color of aluminum cap: gray, RAL 7035 ▪ Weight: ▪ Aluminum approx. 640 g (22.6 oz) ▪ Stainless steel approx. 2 400 g (84.7 oz) When the housing cover is unscrewed: Before fastening, clean the threads in the cover and on the lower part of the housing and lubricate if necessary (recommended lubricant: Klüber Syntheso Glep 1).

TA30H with display window in cover	Specification
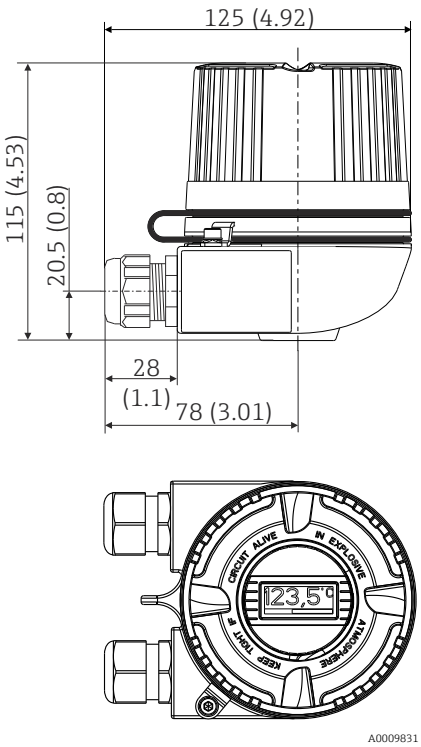	▪ Flameproof (XP) version, explosion-protected, captive screw cap, with two cable entries ▪ Degree of protection: IP 66/68, NEMA Type 4x Encl. Ex-version: IP 66/67 ▪ Material: ▪ Aluminum with polyester powder coating ▪ Stainless steel 316L without coating ▪ Dry lubricant Klüber Syntheso Glep 1 ▪ Display window: single-pane safety glass according to DIN 8902 ▪ Cable entry glands: NPT ½", M20x1.5 ▪ Color of aluminum head: blue, RAL 5012 ▪ Color of aluminum cap: gray, RAL 7035 ▪ Weight: ▪ Aluminum approx. 860 g (30.33 oz) ▪ Stainless steel approx. 2 900 g (102.3 oz) ▪ For display TID10 When the housing cover is unscrewed: Before fastening, clean the threads in the cover and on the lower part of the housing and lubricate if necessary (recommended lubricant: Klüber Syntheso Glep 1).

TA30D	Specification
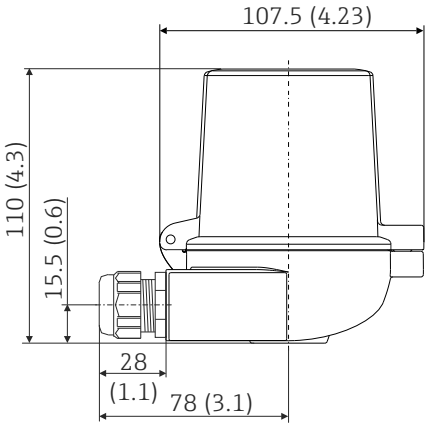	▪ 2 cable entries ▪ Material: aluminum, polyester powder coated Seals: silicone ▪ Degree of protection: ▪ IP66/68 (NEMA Type 4x encl.) ▪ For ATEX: IP66/67 ▪ Cable entry glands: NPT ½" and M20x1.5 ▪ Two head transmitters can be mounted. In the standard configuration one transmitter is mounted in the terminal head cover and an additional terminal block is installed directly on the insert. ▪ Head color: blue, RAL 5012 ▪ Cap color: gray, RAL 7035 ▪ Weight: 390 g (13.75 oz)

Weight

- Head transmitter: approx. 40 to 50 g (1.4 to 1.8 oz)
- Field housing: see specifications

Materials

All the materials used are RoHS-compliant.

- Housing: Polycarbonate (PC), complies with UL94 HB (fire resistance properties)
- Terminals:
  - Screw terminals: nickel-plated brass and gold-plated or tin-plated contacts
  - Push-in terminals: tin-plated brass, contact springs 1.4310, 301 (AISI)
- Potting: PU, corresponds to UL94 V0 WEVO PU 403 FP / FL (fire resistance properties)

Field housing: see specifications

13.7 Certificates and approvals

Current certificates and approvals for the product are available at www.endress.com on the relevant product page:

1. Select the product using the filters and search field.
2. Open the product page.
3. Select **Downloads**.

PROFIBUS® PA certification

The temperature transmitter is certified and registered by the PNO (PROFIBUS® Nutzerorganisation e.V.) The device meets the requirements of the following specifications:

- Certified in accordance with PROFIBUS® PA Profile 3.02
- The device can also be operated with certified devices of other manufacturers (interoperability)

13.8 Supplementary documentation

- Operating Instructions 'iTEMP TMT84' (BA00257R) and hard copy of associated Brief Operating Instructions 'iTEMP TMT84' (KA00258R)
- Supplementary ATEX documentation:
  ATEX II 1G Ex ia IIC: XA00069R
  ATEX II 2(1)G Ex ia IIC: XA01012T
  ATEX II 2G Ex d IIC and ATEX II 2D Ex tb IIIC: XA01007T
- Operating Instructions for "Display TID10" (BA00262R)
- Guidelines for planning and commissioning "PROFIBUS® DP/PA" (BA00034S)

14 Operation using PROFIBUS® PA

The operation is geared towards the user role of the operator and groups the operating parameters into appropriate operating menus.

Two setup modes are available in this user-oriented operating system: The "Standard" setup and the "Expert" setup.

All the basic settings that are needed to operate the device can be made in the "Standard" setup mode.

The "Expert" setup is reserved for experienced users or service staff. All the configuration options of the "Standard" setup are available in the "Expert" setup mode. In addition, it is possible to make special device settings in this mode with additional parameters. Besides these two main menu items, the Display/Operation menu is available for configuring the optional display and the Diagnostics menu is available for system and diagnostics information.

The device parameters are explained in the following section using the user-oriented operating system. All the device parameters that are not listed in this operating structure can only be modified with the aid of appropriate tools and the information in the slot index lists (→ Section 14.4 → 🗎 98).

14.1 Operating structure

→ **Display/operation** → 🗎 69			

→ **Setup** → 🗎 70	→ Advanced setup → 🗎 74	→ Sensor 1
		→ Sensor 2
		→ Security settings

→ **Diagnostics** → 🗎 76	→ System information → 🗎 77	
	→ Measured value → 🗎 77	→ Min./ max. values
	→ Device test/reset → 🗎 78	

→ **Expert** → 🗎 79	→ System → 🗎 80	→ Display	
	→ Sensory mechanism → 🗎 81	→ Sensor 1	→ Special linearization 1
		→ Sensor 2	→ Special linearization 2
	→ Communication→ 🗎 87	→ Analog Input 1	
		→ Analog Input 2	
		→ Analog Input 3	
		→ Analog Input 4	
	→ Diagnostics → 🗎 96	→ System information	
		→ Measured value	→ Min./ max. values
		→ Device test/reset	

14.2 Standard setup

The following parameter groups are available in the standard setup. These parameters are used for basic device configuration. The device can be put into operation with this limited parameter set.

14.2.1 Display/operator group

The settings for displaying the measured value on the optional TID10 plug-in display are made in the Display/Operation menu. The following parameters can be found in the group **Display/Operation** and **Expert → System → Display**.

These settings do not affect the output values of the transmitter. They are only used to configure how information is shown on the display.

Display/operation

Menu item	Parameter name	Parameter access	Description
Expert → System → Display	Display interval	Read/write	For entering (in s) how long a value should be shown on the display. Setting from 4 to 60 s. **Factory setting:** 6 s
	Display source n	Read/write	For selecting the value to be displayed. Possible settings: ▪ Off ▪ Primary Value 1 ▪ Sensor Value 1 ▪ Primary Value 2 ▪ Sensor Value 2 ▪ RJ Value **Factory setting:** Primary Value 1 If all 3 display channels are switched off ('Off' option), the value for primary value 1 automatically appears on the display. If this value is not available (e.g., 'No Sensor' option selected in the Sensor Transducer Block 1, parameter 'Characterization Type 1'), primary value 2 is displayed.
	Description of display value n	Read/write	Description of the value displayed. **Factory setting:** "P1" Maximum 16 letters. Value is not shown on the display.
	Format of display value n	Read/write	Selection of the number of decimal places displayed. Configuration option from 0 to 4. The option 4 means 'AUTO'. The maximum number of decimal places possible always appears on the display. Possible settings: ▪ 0 - xxxxx ▪ 1 - xxxx.x ▪ 2 - xxx.xx ▪ 3 - xx.xxx ▪ 4 - Auto **Factory setting:** 1 - xxxx.x

n = Number of display channels (1 to 4)

Configuration example:

The following measured values should be shown on the display:

Value 1

Measured value to be displayed:	Primary Value 1 of Sensor Transducer 1 (PV1)
Measured value unit:	° C
Decimal places:	2

Value 2

Measured value to be displayed:	RJ Value
Measured value unit:	° C
Decimal places:	1

Value 3

Measured value to be displayed:	Sensor Value 2 (measured value) of Sensor Transducer 2 (SV2)
Measured value unit:	° C
Decimal places:	2

Every measured value should be visible on the display for 12 seconds. For this purpose, the following settings must be made in the **Display/Operation** menu

Parameter	Value
Display interval	12
Display source 1	'Primary Value 1'
Display value description 1	TEMP PIPE 11
Display format 1	'xxx.xx'
Display source 2	'RJ Value'
Display value description 2	INTERN TEMP
Display format 2	'xxxx.x'
Display source 3	'Sensor value 2'
Display value description 3	PIPE 11 BACK
Display format 3	'xxx.xx'

14.2.2 Group Setup

Information on the device mode, such as the target mode, and parameters for the basic configuration of the measuring inputs, such as the sensor type. All the settings that are needed to operate the device can be made in the "Standard" setup mode. The individual parameters are summarized in the Setup menu:

Standard setup	Basic settings for the measuring inputs that are needed to commission the device.
Advanced setup	Configuration of special diagnostics functions such as drift or corrosion detection.

→ **Setup**	→ Advanced setup → 🗎 74	→ Sensor 1
		→ Sensor 2
		→ Security settings

Selecting the operating mode

The operating mode is set by means of the **Physical Block - target mode** parameter group (→ 🗎 71). The Physical Block supports the following operating modes:

- AUTO (automatic mode)
- Out of Service (OOS)

OOS can only be configured if the Condensed Status and Diagnostics (as per Profile 3.01 Am2) are activated. Otherwise, only AUTO is supported.

Procedure for configuring a measuring input:

1. Start
▼
2. Select sensor type (linearization type) e.g., Pt100
▼
3. Select unit (°C)
▼
4. Select type of connection e.g., 3-wire
▼
5. Configure the type of measurement e.g., PV=SV1
▼
6. Enter the offset (optional)
▼
7. Select the reference measuring point and enter the value in the event of external reference measurement (only for TC measurement)
▼
8. If a second measuring channel is used, repeat steps 2 to 5
▼
9. End

Setup

Menu item	Parameter name	Parameter access	Description
	Block Mode	**General information on Block Mode:** The Block Mode contains three elements: ▪ the block's current operating mode (Actual Mode) ▪ the modes supported by the block (Permitted Mode): Analog Input (AI): AUTO, MAN, OOS Physical Block: AUTO, OOS Transducer Block: AUTO ▪ the normal operating mode (Normal Mode) Only the current Block Mode is displayed in the menu. Generally, you can select from several operating modes in a function block, while other block types only operate in the AUTO operating mode for example.	
	Physical Block - Current Mode	Read	Displays the current operating mode of the Physical Block.
	Physical Block - Target Mode	Read/write	Use this function to select the required operating mode. Only automatic operation mode can be selected in the Physical Block. The Physical Block can also be set to OOS if diagnostics according to Profile 3.01 are enabled (Physical Block parameter "COND_STATUS_DIAG" = 1). **Options:** ▪ 0x08 - AUTO ▪ 0x80 - Out of Service (OOS) **Factory setting:** AUTO

Menu item	Parameter name	Parameter access	Description
	Characterization Type n [1)]	Read/write	Configuration of the sensor type. ▪ Characterization Type 1: settings for sensor input 1 ▪ Characterization Type 2: settings for sensor input 2 **Factory setting:** Channel 1: Pt100 IEC751 Channel 2: No sensor Please observe the terminal assignment in Section 5.2 → 17 when connecting the individual sensors. In the case of 2-channel operation, the possible connection options in Section 5.2.1 → 18 also have to be observed.
	Input Range and Mode n	Read/write	Configuration of the input measurement range. ▪ 0: mV, range 1: −5 to 30 mV; range: −5 to 30 mV; min. span: 1 mV ▪ 1: mV, range 2: −20 to 100 mV; min. span: 1 mV ▪ 128: Ω, range 1: 10 to 400 Ω; min. span: 10 Ω ▪ 129: Ω, range 2: 10 to 2 000 Ω; min. span: 10 Ω **Factory setting:** 128: Ω, range 1: 10 to 400 Ω; min. span: 10 Ω
	Unit n	Read/write	Configuration of the temperature unit for PV value n ▪ 1000 - K ▪ 1001 - ℃ ▪ 1002 - ℉ ▪ 1003 - Rk ▪ 1281 - Ohm ▪ 1243 - mV ▪ 1342 - % **Factory setting:** ℃
	Connection type n	Read/write	Sensor connection type: Sensor Transducer 1 (connection type 1): ▪ 0 - 2-wire connection ▪ 1 - 3-wire connection ▪ 2 - 4-wire connection **Factory setting:** 3-wire Sensor Transducer 2 (connection type 2): ▪ 0 - 2-wire connection ▪ 1 - 3-wire connection **Factory setting:** 3-wire

Menu item	Parameter name	Parameter access	Description
	Measuring type n	Read/write	Displays the calculation process for Primary Value 1. **Options:** Sensor Transducer 1 (measuring type 1): ▪ PV = SV1: Secondary value 1 ▪ PV = SV1-SV2: Difference ▪ PV = 0.5 x (SV1+SV2): Average ▪ PV = 0.5 x (SV1+SV2) Redundancy: Average or Secondary Value 1 or Secondary Value 2 in the event of a sensor error in the other sensor. ▪ PV = SV1 (OR SV2): Backup function: If sensor 1 fails, the value of sensor 2 automatically becomes the Primary Value. ▪ PV = SV1 (OR SV2 if SV1>T): PV changes from SV1 to SV2 if SV1 > value T (parameter: **Threshold value n**) ▪ PV =ABS(SV1-SV2) if PV > drift value: PV is the drift value between sensor 1 and sensor 2. If PV exceeds the configured drift value (**Sensor drift alert value**), a drift alarm is output. ▪ PV =ABS(SV1-SV2) if PV< drift value: PV is the drift value between sensor 1 and sensor 2. If PV undershoots the configured drift value (sensor drift detection limit value), a drift alarm is output. **Factory setting:** PV = SV1 Sensor Transducer 2 (measuring type 2): ▪ PV = SV2: Secondary value 2 ▪ PV = SV2-SV1: Difference ▪ PV = 0.5 x (SV2+SV1): Average ▪ PV = 0.5 x (SV2+SV1) Redundancy: Average or Secondary Value 1 or Secondary Value 2 in the event of a sensor error in the other sensor. ▪ PV = SV2 (OR SV1): Backup function: If sensor 2 fails, the value of sensor 1 automatically becomes the Primary Value. ▪ PV = SV2 (OR SV 1 if SV2>T): PV changes from SV2 to SV1 if SV2 > value T (parameter: **Threshold value n**) ▪ PV =ABS(SV1-SV2) if PV> drift value: PV is the drift value between sensor 1 and sensor 2. If PV exceeds the configured drift value (sensor drift detection limit value), a drift alarm is output. ▪ PV =ABS(SV1-SV2) if PV< drift value: PV is the drift value between sensor 1 and sensor 2. If PV undershoots the configured drift value (sensor drift detection limit value), a drift alarm is output. **Factory setting:** PV = SV1 = Sensor 2
	2-wire compensation n	Read/write	Two-wire compensation for RTDs. The following values are permitted: 0 to 30 Ω **Factory setting:** 0
	Offset n	Read/write	Offset for Primary Value 1 The following values are permitted: ▪ -10 to +10 for Celsius, Kelvin, mV and Ohm ▪ -18 to +18 for Fahrenheit, Rankine **Factory setting:** 0.0
	Threshold value n	Read/write	Value for switching in PV mode for sensor switching. Entry in the range from −270 to 2 200 °C (−454 to 3 992 °F). **Factory setting:** 0

Menu item	Parameter name	Parameter access	Description
	Reference Junction Type n	Read/write	Configuration of reference junction measurement for temperature compensation in thermocouples: ▪ 0 - no reference: no temperature compensation is used. ▪ 1 - internally measured reference junction temperature: internal reference junction temperature is used for temperature compensation. ▪ 2 - external fixed value: "Ext. Reference Junction Temperature" is used for temperature compensation. **Factory setting:** 1 - internally measured reference junction temperature
	Ext. Reference Junction Temperature n	Read/write	Value for temperature compensation (see the **Reference Junction Type n**) parameter. **Factory setting:** 0.0

1) Number of the Transducer Block (1-2) or the sensor input (1 or 2)

Submenu Setup - Advanced setup

Corrosion monitoring

Sensor connection cable corrosion can lead to false measured value readings. Therefore the unit offers the possibility of recognizing any corrosion before a measured value is affected. Corrosion monitoring is only possible for RTDs with a 4-wire connection and thermocouples.

Sensor drift detection

If two sensors are connected and the measured values differ by a specified value, an error or a maintenance prompt (sensor drift detection) is sent to the control system. The drift detection function can be used to verify the correctness of the measured values and for mutual monitoring of the connected sensors.

The drift detection can be activated with the **Measuring type** parameter. A distinction is made between two specific modes. For the measuring type **PV =(|SV1-SV2|) if PV < sensor drift detection limit value**, a diagnostic message is output if the limit value is undershot or, in the case of **PV =(|SV1-SV2|) if PV> sensor drift detection limit value**, if the limit value is overshot.

Procedure for configuring drift detection for sensor 1:

1. Start
▼
2. Select measure type **PV =ABS(SV1-SV|) if PV < sensor drift detection limit value** or **PV =ABS(SV1-SV2) if PV > sensor drift detection limit value**
▼
3. Set sensor drift detection limit value 1 to the desired value.
▼
4. Where necessary, set the sensor drift detection to **Warning** or **Failure**.
▼
5. End

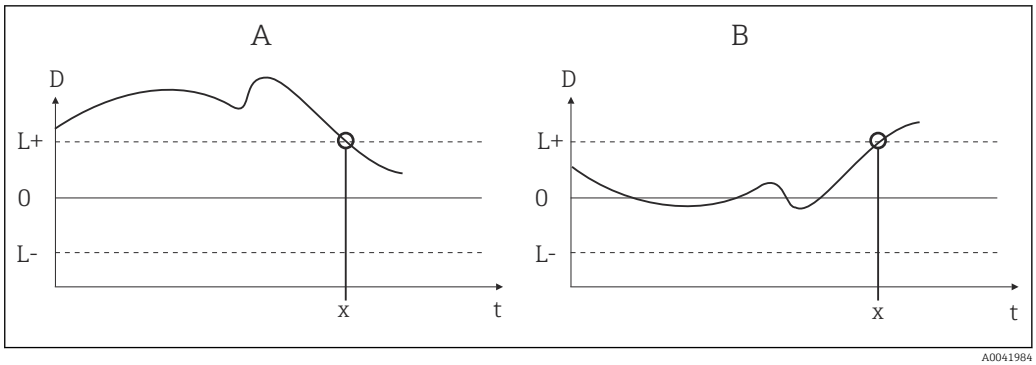

17 Drift detection

A 'Undershooting' mode
B 'Overshooting' mode
D Drift
L+, L- Upper (+) or lower (-) set point
t Time
x Error (failure) or need for maintenance (warning), depending on the setting

Write protection

Hardware write protection for the device parameters is enabled and disabled by means of a DIP switch on the rear of the optional display.

The **Hardware write protection** parameter (→ 75) shows the status of the hardware write protection. The following statuses are possible:

1 → Hardware write protection enabled, device data cannot be overwritten

0 → Hardware write protection disabled, device data can be overwritten

No software write protection is available to prevent all parameters being written acyclically. n: Number of the Transducer Block (1-2) or the sensor input (1 or 2)

Setup

Menu item	Parameter name	Parameter access	Description
Advanced setup	Hardware write protection	Read	Displays the status of hardware write protection. **Display:** ▪ 0 - Off → write protection disabled, parameters can be changed. ▪ 1 - On → write protection enabled, parameters **cannot** be changed. **Factory setting:** 0
	Ambient alarm	Read/write	Diagnostic message in the event of the operating temperature of the transmitter being undershot or overshot, < −40 °C (−40 °F) or > +85 °C (185 °F): ▪ 0 - Maintenance: Int. temperature overshoot/ undershoot results in warning. ▪ 1 - Failure: Int. temperature overshoot/undershoot results in alarm. **Factory setting:** 0 - Maintenance

Menu item	Parameter name	Parameter access	Description
	Sensor drift monitoring	Read/write	Deviation between SV1 and SV2 is identified as an error (Failure) or as need for maintenance (Warning): ▪ 1- FAILURE: (sensor deviation > sensor drift detection limit value n) → Failure. Sensor drift is displayed as error ▪ 0 - Warning: (sensor deviation > sensor drift detection limit value n) → Warning. Sensor drift is displayed as warning **Factory setting:** 0 - Warning
	Sensor drift detection limit value n	Read/write	Configuration of the max. permitted measured value deviation between sensor 1 and sensor 2. This value is relevant if **"PV =ABS(SV1- SV2) if PV< Drift value"** was selected for the measuring type. Permitted deviation from 0.1 to 999. **Factory setting:** 999
	Corrosion detection n	Read/write	▪ 0 - OFF: Corrosion detection off ▪ 1 - ON: Corrosion detection on **Factory setting:** 0 - OFF ℹ Only possible for RTD 4-wire connection and thermocouples (TC).

14.2.3 Group Diagnostics

All the information that describes the device, the device status and the process conditions can be found in this group. The individual parameters are summarized in the Diagnostics (→ 🗎 76) menu:

→ Diagnostics	→System information → 🗎 77	
	→ Measured value → 🗎 77	→ Min./ max. values
	→ Device test/reset → 🗎 78	

System information	Standard Setup/Expert	Basic settings that are needed to operate the device.
Measured values → Min./ max. values	Standard Setup/Expert	Settings for the measuring input of channel 1 and channel 2.
Device test/reset	Standard Setup/Expert	Settings for special diagnostic functions such as drift or corrosion detection.

Diagnostics menu

Diagnostics

Menu item	Parameter name	Parameter access	Description
Expert → Diagnostics	Current diagnostics	Read	Displays the diagnostic code. The diagnostic code consists of the "Current status" and the "Current error code". **Example:** F041 (Failure + sensor failure)
	Description of current diagnostics	Read	Displays the status information as description text, see Section 11.3 → 🗎 43

Menu item	Parameter name	Parameter access	Description
	Channel information status	Read	Displays where in the device the highest priority error occurs. ▪ 0: Device ▪ 1: Sensor 1 ▪ 2: Sensor 2
	Number status	Read	The number of status messages currently pending in the device.
	Bus address	Read	Displays the device bus address. **Factory setting:** 126

Submenu Diagnostics - System information

Diagnostics

Menu item	Parameter name	Parameter access	Description
Submenu System information	Firmware version	Read	Revision status of device firmware.
	Serial number	Read [1]	Displays the serial number of the device.
	Order code	Read [1]	Displays the device order code.
	Order identifier	Read [1]	Displays the order ident number as a description for the device delivery status
	Tag name (TAG)	Read/write	Use this function to enter a user-specific text (max. 32 characters) for the unique identification and assignment of the block. **Factory setting:** "– – – – – – – –" no text
	ENP version	Read	Displays the ENP (electronic name plate) version
	Profile	Read	0x4002 - PROFIBUS PA, Compact Class B
	Profile revision	Read	Displays the profile version implemented in the device.
	Manufacturer	Read	Displays the manufacturer ID number. **Display:** 0x11(hex);17 (decimal): Endress+Hauser
	Product name	Read	Displays the manufacturer-specific device identification. **Display:** Device name
	PROFIBUS Ident Number	Read	Displays the Profibus User Organization identification number of the device. ▪ 0x1551 → TMT84 ▪ 0x9700 → Profile Ident Number 1x AI Block ▪ 0x9701 → Profile Ident Number 2x AI Block ▪ 0x9702 → Profile Ident Number 3x AI Block ▪ 0x9703 → Profile Ident Number 4x AI Block factory setting: 0x1551 **Factory setting:** 0x1551

1) These parameters can be changed if the "Service locking" parameter is configured accordingly in the Expert system menu.

Submenu Diagnostics - Measured values

This menu is only visible in the online mode.

n: Number of the Transducer Block (1-2) or the sensor input (1 or 2)

Diagnostics

Menu item	Parameter name	Parameter access	Description
Submenu Measured values	PV value n	Read	Displays the primary output value of the Transducer Block. The PV value n can be made available to an AI Block for further processing.
	Process temperature n	Read	Displays the measured value of sensor n
	RJ temperature	Read	Internal reference temperature measurement

Submenu Diagnostics - Measured values - Min/max value

This menu is only visible in the online mode.

In this menu, you can view the maximum indicators of the PV values, the two measuring inputs and the internal reference measurement. In addition, the PV values saved can be reset.

n: Number of the Transducer Block (1-2) or the sensor input (1 or 2)

Diagnostics

Menu item	Parameter name	Parameter access	Description
Submenu Measured values - Min/max value	PV n min.	Read/write	Min. indicator for PV is stored in the nonvolatile memory in intervals of 10 minutes. Can be reset.
	PV n max.	Read/write	Max. indicator for PV is stored in the nonvolatile memory in intervals of 10 minutes. Can be reset.
	Measured value n min.	Read	Displays the minimum sensor value. Is stored in the nonvolatile memory in intervals of 10 minutes. Can be reset.
	Measured value n max.	Read	Displays the maximum sensor value. Is stored in the nonvolatile memory in intervals of 10 minutes. Can be reset.
	RJ min.	Read	Indicator for the minimum value to occur at the internal reference temperature measuring point.
	RJ max.	Read	Indicator for the maximum value to occur at the internal reference temperature measuring point.

Submenu Diagnostics - Device test/reset

This menu is only visible in the online mode.

By means of a reset, the device can be set to a defined state depending on the reset code.

Diagnostics

Menu item	Parameter name	Parameter access	Description
Submenu Device test/reset	Reset to delivery status	Read/write	Resets or restarts the device. **User input:** 0 → No function/No action 1 → Standard configuration/resets all bus-specific parameters to factory settings with the exception of the configured station address. The device displays the next cold start for 10 seconds in the corresponding bit of the DIAGNOSTICS parameter group. 2506 → Warm start/execution of a warm start. The device displays the next warm start for 10 seconds in the corresponding bit of the DIAGNOSTICS parameter group. 2712 → Resets address to '126'/resets the station address to the usual PROFIBUS default address of 126. 32769 → Configuration ordered/resets to delivery status. **Factory setting:** 0 If you select 1, the units are reset according to the factory setting not delivery status. After resetting, check the units and configure the unit you require. Then run the **Set Unit To Bus** parameter (→ 🗎 87).

14.3 Setup Expert

The parameter groups for the Expert setup contain all the parameters of the Standard setup and other parameters that are solely reserved for experts.

→ Expert	→ System → 🗎 80 Settings and description of the measuring point	→ Display → 🗎 69	
	→ Sensory mechanism → 🗎 81 Settings of the two measuring inputs	→ Sensor 1	→ Special linearization 1
		→ Sensor 2	→ Special linearization 2
	→ Communication → 🗎 87 Settings of the Profibus address and setup of the 4 Analog Input Blocks	→ Analog Input 1	
		→ Analog Input 2	
		→ Analog Input 3	
		→ Analog Input 4	
	→ Diagnostics → 🗎 96 Displays device information and status for service and maintenance purposes.	→ System information → 🗎 77	
		→ Measured value	→ Min./ max. values
		→ Device test/reset → 🗎 78	

14.3.1 Group System

All the parameters that describe the measuring point in greater detail can be viewed and configured in the "System" group.

System

Menu item	Parameter name	Parameter access	Description
	Target mode	Read/write	Use this function to select the required operating mode. Only automatic operation mode can be selected in the Physical Block. The Physical Block can also be set to OOS if diagnostics according to Profile 3.02 is enabled (Physical Block parameter "COND_STATUS_DIAG" = 1). **Options:** ▪ 0x08 - AUTO ▪ 0x80 - Out of Service (OOS) **Factory setting:** AUTO
	Block Mode	**General information on Block Mode:** Block Mode contains three elements: ▪ the block's current operating mode (Actual Mode) ▪ the modes supported by the block (Permitted Mode): Analog Input (AI): AUTO, MAN, OOS Physical Block: AUTO, OOS Transducer Block: AUTO ▪ the normal operating mode (Normal Mode) Only the current Block Mode is displayed in the menu. Generally, you can select from several operating modes in a function block, while other block types only operate in the AUTO operating mode for example.	
	Current mode	Read	Displays the current operating mode. **Display:** AUTO
	PROFIBUS Ident Number Selector	Read/write	Use this function to select the configuration behavior. Every PROFIBUS device must check an identification number assigned by the PROFIBUS User Organization during the configuration phase. As well as these device-specific identification numbers, there are also PROFILE identification numbers that must be accepted during the configuration phase for the purpose of compatibility with products from other manufacturers. In this case, it is possible that the device restricts the functionality relating to the cyclical data to a profile-defined level. **Options:** ▪ 0 → Profile-specific Ident Number 9703 (1xAI) ▪ 1 → Manuf.-specific Ident Number 1551 (Device name) ▪ 127 → Automatic (0x9700, 0x9701, 0x9702, 0x9703, 0x1551, 0x1523) ▪ 128 → Manuf.-specific Ident Number 1523 (Device name) ▪ 129 → Profile-specific Ident Number 9700 (1xAI) ▪ 130 → Profile-specific Ident Number 9701 (2xAI) ▪ 131 → Profile-specific Ident Number 9702 (3xAI) **Factory setting:** 127
	Description	Read/write	Use this function to enter a description of the application for which the device is used. **Factory setting:** No description (32 space characters)

Menu item	Parameter name	Parameter access	Description
	Message	Read/write	Use this function to enter a message about the application for which the device is used. **Factory setting:** No message (32 space characters)
	Installation date	Read/write	Use this function to enter the device installation date. **Factory setting:** No date (16 space characters)
	TAG Location	Read/write	I&M Parameter TAG_LOCATION
	Signature	Read/write	I&M Parameter SIGNATURE
only visible in online mode	Hardware write protection	Read	Displays the status of hardware write protection. **Display:** ▪ 0 → write protection disabled, parameters can be changed. ▪ 1 → write protection enabled, parameters cannot be changed. **Factory setting:** 0 Write protection is enabled/disabled using a DIP switch (see Section 6.2.2). → 27
	System alarm delay		Alarm hysteresis: Value as to the time a device status (Failure or Maintenance) and measured value status (Bad or Uncertain) is delayed until the status is output. Can be configured between 0 and 10 seconds. **Factory setting:** 2 s This setting does not affect the display.
	Mains frequency filter	Read/write	Mains filter for the A/D converter. **Options:** ▪ 0 to 50 Hz ▪ 1 to 60 Hz **Factory setting:** 0 to 50 Hz
	Ambient alarm	Read/write	Status message in the event of the operating temperature of the transmitter being undershot or overshot, < −40 °C (−40 °F) or > +85 °C (185 °F): ▪ 0 - Maintenance: Int. temperature overshoot/ undershoot results in warning. ▪ 1 - Failure: Int. temperature overshoot/undershoot results in alarm. **Factory setting:** 0 - Maintenance

14.3.2 Group Sensory mechanism

Procedure for configuring a sensor input → 70

n: Number of the Transducer Block (1-2) or the sensor input (1 or 2)

Sensory mechanism

Menu item	Parameter name	Parameter access	Description
Submenu "Sensor 1" or "Sensor 2"	Characteristic type n	Read/write	Configuration of the sensor type. Characteristic type 1: Settings for Sensor input 1 sensor Characteristic type 2: Settings for Sensor input 2 **Factory setting:** Channel 1: Pt100 IEC751 Channel 2: No sensor Please observe the terminal assignment in Section 5.2 when connecting the individual sensors. In the case of 2-channel operation, the possible connection options in Section 5.2.1 also have to be observed.
	Input Range and Mode n	Read/write	Configuration of the input measurement range. ▪ 0: mV, range 1: −5 to 30 mV; range: −5 to 30 mV; min. span: 1 mV ▪ 1: mV, range 2: −20 to 100 mV; min. span: 1 mV ▪ 128: Ω, range 1: 10 to 400 Ω; min. span: 10 Ω ▪ 129: Ω, range 2: 10 to 2 000 Ω; min. span: 10 Ω **Factory setting:** 128: Ω, range 1: 10 to 400 Ω; min. span: 10 Ω
	Unit n	Read/write	Configuration of the temperature unit for PV value n ▪ 1000 - K ▪ 1001 - °C ▪ 1002 - °F ▪ 1003 - Rk ▪ 1281 - Ohm ▪ 1243 - mV ▪ 1342 - % **Factory setting:** °C
	Connection type n	Read/write	Sensor connection type: Sensor Transducer 1 (connection type 1): ▪ 0 - 2-wire connection ▪ 1 - 3-wire connection ▪ 2 - 4-wire connection **Factory setting:** 3-wire Sensor Transducer 2 (connection type 2): ▪ 0 - 2-wire connection ▪ 1 - 3-wire connection **Factory setting:** 3-wire

Menu item	Parameter name	Parameter access	Description
	Measuring type n	Read/write	Displays the calculation process for Primary Value 1. See also → 📄 70 SV1 = Secondary Value 1 = Sensor value 1 in temperature Transducer Block 1 = Sensor value 2 in temperature Transducer Block 2 SV2 = Secondary Value 2 = Sensor value 2 in temperature Transducer Block 1 = Sensor value 1 in temperature Transducer Block 2 **Options:** Sensor Transducer 1 (measuring type 1): ▪ PV = SV1: Secondary value 1 ▪ PV = SV1-SV2: Difference ▪ PV = 0.5 x (SV1+SV2): Average ▪ PV = 0.5 x (SV1+SV2) Redundancy: Average or Secondary Value 1 or Secondary Value 2 in the event of a sensor error in the other sensor. ▪ PV = SV1 (OR SV2): Backup function: If sensor 1 fails, the value of sensor 2 automatically becomes the Primary Value. ▪ PV = SV1 (OR SV2 if SV1>T): PV changes from SV1 to SV2 if SV1 > value T (Parameter: **Sensor switching threshold value n**) ▪ PV =(|SV1-SV2|) if PV > drift value: PV is the drift value between sensor 1 and sensor 2. If PV exceeds the configured drift value (**Sensor drift alert value**), a drift alarm is output. ▪ PV =(|SV1-SV2|) If PV undershoots the configured drift value: PV is the drift value between sensor 1 and sensor 2. If PV falls below the configured drift value (**Sensor drift alert value**), a drift alarm is output. **Factory setting:** PV = SV1 Sensor Transducer 2 (measuring type 2): ▪ PV = SV2: Secondary value 2 ▪ PV = SV2-SV1: Difference ▪ PV = 0.5 x (SV2+SV1): Average ▪ PV = 0.5 x (SV2+SV1) Redundancy: Average or Secondary Value 1 or Secondary Value 2 in the event of a sensor error in the other sensor. ▪ PV = SV2 (OR SV1): Backup function: If sensor 2 fails, the value of sensor 1 automatically becomes the Primary Value. ▪ PV = SV2 (OR SV 1 if SV2>T): PV changes from SV2 to SV1 if SV2 > value T (parameter: **Threshold value n**) ▪ PV = (|SV1-SV2|) if PV > drift value: PV is the drift value between sensor 1 and sensor 2. If PV exceeds the configured drift value (Sensor drift alert value), a drift alarm is output. ▪ PV =(|SV1-SV2|) If PV undershoots the configured drift value: PV is the drift value between sensor 1 and sensor 2. If PV falls below the configured drift value (Sensor drift alert value), a drift alarm is output. ▪ PV = SV1: Secondary value 1 (= Sensor 2) ▪ PV = SV1-SV2: Difference ▪ PV = 0.5 x (SV1+SV2): Average ▪ PV = 0.5 x (SV1+SV2) Redundancy: Average or Secondary Value 1 or Secondary Value 2 in the event of a sensor error in the other sensor. ▪ PV = SV1 (OR SV2): Backup function: If sensor 2 fails, the value of sensor 1 automatically becomes the Primary Value. ▪ PV = SV1 (OR SV2 if SV1>T): PV changes from sensor 2 value to sensor 1 value if sensor 2 value > value T (Parameter **Sensor switching threshold value n**)

Menu item	Parameter name	Parameter access	Description
			▪ PV =(|SV1-SV2|) if PV > drift value: PV is the drift value between sensor 1 and sensor 2. If PV exceeds the configured drift value (**Sensor drift alert value**), a drift alarm is output. ▪ PV =(|SV1-SV2|) If PV undershoots the configured drift value: PV is the drift value between sensor 1 and sensor 2. If PV falls below the configured drift value (**Sensor drift alert value**), a drift alarm is output. **Factory setting:** PV = SV1 = Sensor 2
	2-wire compensation n	Read/write	Two-wire compensation for RTDs. The following values are permitted: 0 to 30 Ω
	Offset n	Read/write	Offset for Primary Value 1 The following values are permitted: ▪ -10 to +10 for Celsius, Kelvin, mV and Ohm ▪ -18 to +18 for Fahrenheit, Rankine **Factory setting:** 0.0
(Only visible in online mode)	Sensor n lower limit	Read	Displays the lower physical sensor range.
(Only visible in online mode)	Sensor n upper limit	Read	Displays the upper physical sensor range.
	Threshold value n	Read/write	Value for switching in PV mode for sensor switching. Entry in the range from −270 to 2 200 °C (−454 to 3 992 °F).
	Reference Junction Type n	Read/write	Configuration of reference junction measurement for temperature compensation in thermocouples: ▪ 0 - no reference: no temperature compensation is used. ▪ 1 - internally measured reference junction temperature: internal reference junction temperature is used for temperature compensation. ▪ 2 - external fixed value: "Ext. Reference Junction Temperature" is used for temperature compensation. **Factory setting:** 1 - internally measured reference junction temperature
	Ext. Reference Junction Temperature n	Read/write	Value for temperature compensation (see **Reference junction**) parameter. **Factory setting:** 0.0
	Sensor drift monitoring	Read/write	Deviation between SV1 and SV2 is identified as an error (Failure) or as need for maintenance (Warning): ▪ 1 - FAILURE: (sensor deviation > Sensor drift alert value n) → Failure. Sensor drift is displayed as error ▪ 0 - Warning: (sensor deviation > sensor drift detection limit value n) → Warning. Sensor drift is displayed as warning **Factory setting:** 0 - Warning

Menu item	Parameter name	Parameter access	Description
	Sensor drift detection limit value n	Read/write	Configuration of the max. permitted measured value deviation between sensor 1 and sensor 2. This value is relevant if **"PV =ABS(SV1- SV2) if PV< Drift value"** was selected for the measuring type. Permitted deviation from 0.1 to 999. **Factory setting:** 999
	Corrosion detection n	Read/write	▪ 0 - OFF: Corrosion detection off ▪ 1 - ON: Corrosion detection on **Factory setting:** 0 - OFF Only possible for RTD 4-wire connection and thermocouples (TC).

Submenu "Special linearization 1" or "Special linearization 2"

Procedure for configuring a special linearization using Callendar-Van Dusen coefficients from a calibration certificate:

1. Start
▼
2. Configure the type of measurement e.g. PV=SV1
▼
3. Select unit (°C)
▼
4. Select the sensor type (linearization type) "RTD platinum (Callendar-Van Dusen)"
▼
5. Select type of connection e.g. 4-wire
▼
6. Enter the four coefficients A, B, C and R0
▼
7. If special linearization is also used for a second sensor, repeat steps 2 to 6
▼
8. End

Sensory mechanism

Menu item	Parameter name	Parameter access	Description
Submenu "Special linearization n"	Call.-V. Dusen start of range	Read/write	Lower calculation limit for Callendar-Van Dusen linearization. **Factory setting:** 0.0
	Call.-V. Dusen end of range	Read/write	Upper calculation limit for Callendar-Van Dusen linearization. **Factory setting:** 100.0
	Call.-V. Dusen coeff. R0	Read/write	The values for the R0 value must be in the range of 40 to 1 050 Ω. **Factory setting:** 100

Menu item	Parameter name	Parameter access	Description
	Call.-V. Dusen coeff. A	Read/write	Sensor linearization based on the Callendar-Van Dusen method. The Call.-V. Dusen coeff. X parameters are used for calculating the sensor characteristic curve if "RTD - Callendar-Van Dusen" is set in the Characteristic type 1 parameter. **Factory setting Call.-V. Dusen coeff. A:** 3.9083E-03 **Factory setting Call.-V. Dusen coeff. B:** -5.775E-07 **Factory setting Call.-V. Dusen coeff. C:** 0
	Call.-V. Dusen coeff. B	Read/write	
	Call.-V. Dusen coeff. C	Read/write	
(Only visible in online mode)	Sensor trimming	Read/write	▪ Factory trim standard calibration: Sensor linearization with factory calibration values ▪ User trim standard calibration: Sensor linearization with the values "Calibration Highest Point" and "Calibration Lowest Point" The original linearization can be established by resetting this parameter to 'Factory trim standard calibration'.
	Sensor trimming lower value	Read/write	Lower point for linear characteristic calibration (this affects offset and slope). To write to this parameter, "Sensor trimming" must be set to "User trim standard calibration".
	Sensor trimming upper value	Read/write	Upper point for linear characteristic calibration (this affects offset and slope). To write to this parameter, "Sensor calibration method" must be set to "User trim standard calibration".
	Sensor trimming min. span	Read	Span of the measuring range, depending on the sensor type set
	Polynomial start of range	Read/write	Lower calculation limit for the RTD polynomial (nickel/copper) linearization. **Factory setting:** for sensor type = copper: 0 for sensor type = nickel: -60
	Polynomial end of range	Read/write	Upper calculation limit for the RTD polynomial (nickel/copper) linearization. **Factory setting:** for sensor type = copper: 200 for sensor type = nickel: 100
	Polynomial coeff. R0	Read/write	The values for the R0 value must be in the range of 40 to 1 050 Ω. **Factory setting:** for sensor type = copper: 100 for sensor type = nickel: 100

Menu item	Parameter name	Parameter access	Description
	Polynomial coeff. A	Read/write	Sensor linearization of copper/nickel resistance thermometers (RTD). The POLY_COEFF_XX parameters are used for calculating the sensor characteristic curve if 'RTD polynomial nickel' or 'RTD polynomial copper' is set in the **Characteristic type n** parameter. **Factory setting:** **Polynomial coeff. A** Copper = 0.00428 Nickel = 5.4963E-03 **Polynomial coeff. B** Copper = 6.2032E-07 Nickel = 6.7556E-06 **Polynomial coeff. C** Copper = 8.5154E-10 Nickel = 0
	Polynomial coeff. B	Read/write	
	Polynomial coeff. C	Read/write	
	Sensor serial number	Read/write	Serial number of the connected sensor.

14.3.3 Group Communication

Changing the unit

The system unit for the temperature can be changed in the Sensor 1 or Sensor 2 menu for the relevant channel.

Changing the unit does not initially have any effect on the measured value transmitted to the automation system. This ensures that no sudden change in the measured value can have an effect on the subsequent control routine.

Communication

Menu item	Parameter name	Parameter access	Description
	Bus address	Read	Displays the device bus address. **Factory setting:** 126
(Only visible in online mode)	Set unit to bus	Read/write	Transfers configured system units to the automation system. During the transfer, the scaling of the OUT SCALE value in the Analog Input Block is automatically overwritten with the configured PV SCALE and the unit from the Transducer Block is copied to the "Out Scale - Unit" (output unit). **Options:** ▪ 0 - OFF ▪ 1 - ON **Factory setting:** 0 - OFF Activating this parameter can result in an erratic change of the output value "Out value" and thus affect subsequent control loops.

Submenus "Analog Input 1" to "Analog Input 4"

The standard parameters for the "Security settings" menu can be found in the submenu Setup → Advanced setup → 📄 74. The expert parameters are listed in the following table.

Status of the Output value

The status of the **Output value** parameter group communicates the status of the Analog Input function block and the validity of the **Output value** to the downstream function blocks.

Status of the OUT output value:	Meaning of the output value:
GOOD NON CASCADE	→ OUT is valid and can be used for further processing.
UNCERTAIN	→ OUT can only be used for further processing to a limited extent.
BAD	→ OUT is not valid.
The BAD status value occurs when the Analog Input function block is switched to the OOS mode (out-of-service) or in the event of serious errors (see status code and system/process error messages, → 🗎 43).	

Simulation of input/output

It is possible to simulate the input and output of the function block via various parameters of the Analog Input 1-4 menus:

- **Simulating the input of the Analog Input function block:**
  The input value (measured value and status) can be specified by means of the "AI Simulation/AI Simulation value/AI Simulation status" parameters. Since the simulation value runs through the entire function block, all the parameter settings of the block can be checked.
- **Simulating the output of the Analog Input function block:**
  Set the operating mode to MAN with the **Current mode** (→ 🗎 70) parameter and directly specify the desired output value in the **Output value** (→ 🗎 90) parameter.

Failsafe mode

If an input or simulation value has the status BAD, the Analog Input function block uses the failsafe mode defined in the "Failsafe mode" parameter. The following options are available in the "Failsafe mode; → 🗎 90" parameter:

Options in the FAILSAFE TYPE parameter (failsafe mode):	Failsafe mode:
FSAFE VALUE	The value specified in the "Failsafe default value" parameter is used for further processing.
LAST GOOD VALUE	The last good value is used for further processing.
WRONG VALUE	The current value is used for further processing, despite the BAD status.
The factory setting is WRONG VALUE.	

Failsafe mode is also activated if the Analog Input function block is set to the "OUT OF SERVICE" operating mode.

Limit values

The user can set two warning limits and two alarm limits to monitor the process. The status of the measured value and the parameters of the limit value alarms are indicative of the measured value's relative situation. It is also possible to define an alarm hysteresis in order to avoid frequent changes of the limit value flags and frequent switching between active and inactive alarm settings (see → 🗎 90).

The limit values are based on the output value OUT. If the output value OUT exceeds or undershoots the defined limit values, an alarm is sent to the automation system via the limit value process alarms.

Process alarms provide information about certain block statuses and block events. The following process alarms can be defined and generated in the Analog Input function block:

HI HI LIM	→ 🗎 90		LO LO LIM	→ 🗎 90
HI LIM	→ 🗎 90		LO LIM	→ 🗎 90

Limit value process alarms

If a limit value is infringed, the priority specified for the limit value alarm is checked before the limit value violation is communicated to the fieldbus host system.

Rescaling the input value

In the Analog Input function block, the input value or input range can be scaled in accordance with the automation requirements.

Example:

- The system unit in the Transducer Block is °C.
- The sensor measuring range is -200 to 850°C.
- The process-relevant measuring range is 0 to 200°C.
- The output range to the process control system should be 0 to 100%.

The measured value from the Transducer Block (input value) is rescaled linearly via the input scaling PV SCALE to the desired output range OUT SCALE:

Parameter group PV SCALE (→ 🗎 87)		**Parameter group OUT SCALE (→ 🗎 87)**	
PV SCALE MIN	→ 0	OUT SCALE MIN	→ 0
PV SCALE MAX	→ 200	OUT SCALE MAX	→ 100
		OUT UNIT	→ %

The result is that with an input value of, for example, 100°C (212 °F), a value of 50% is output via the OUT parameter.

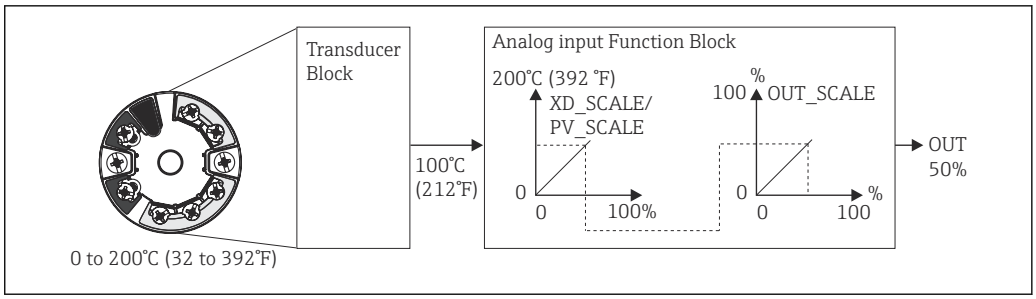

18 Scaling procedure in the Analog Input function block

Communication

Menu item	Parameter name	Parameter access	Description
Analog Input	Static Rev. No.	Read	A block operates static parameters (Static attribute) that are not changed by the process. Static parameters, whose values change during optimization or configuration, cause the ST REV parameter to increase by 1. This supports parameter version management. If several parameters change within a very short time, e.g. due to loading of parameters from FieldCare, PDM, etc. in the device, the static revision counter can show a higher value. This counter can never be reset and is not reset to a default value after a device reset. If the counter overflows, (16 bit), it starts again at 1.
	TAG	Read/write	Use this function to enter a user-specific text (max. 32 characters) for the unique identification and assignment of the block. **User input:** Max. 32-character text, options: A-Z, 0-9, +,–, punctuation marks **Factory setting:** "– – – – – – – –" no text
	Target mode	Read/write	Use this function to select the required operating mode. **Options:** 0x08 AUTO 0x10 MAN 0x80 OOS **Factory setting:** 0x08 AUTO
	BLOCK MODE	**General information on the BLOCK MODE parameter group:** This parameter group contains three elements: ▪ the block's current operating mode (Actual Mode) ▪ the modes supported by the block (Permitted Mode) ▪ the normal operating mode (Normal Mode) A distinction is made between "Automatic mode" (AUTO), manual intervention by the user (MAN) and the "Out of service" (O/S) mode. Generally, you can select from several operating modes in a function block, while other block types only operate in the AUTO operating mode for example.	
	Current mode	Read	Displays the current operating mode. **Options:** 0x08 AUTO 0x10 MAN 0x80 OOS **Factory setting:** 0x08 AUTO
	AI n channel	Read/write	Assignment between the logical hardware channel of the Transducer Block and the input of the Analog Input function block. The Transducer Block of the device makes five different measured values available to the input channel of the Analog Input function block. **Options:** ▪ 0x0108 (264) → Primary Value Transducer 1 ▪ 0x010A (266) → Secondary Value 1 Transducer 1 ▪ 0x015D (349) → Reference Junction Temperature ▪ 0x0208 (520) → Primary Value Transducer 2 ▪ 0x020A (522) → Secondary Value 1 Transducer 2 **Factory setting:** AI1 Primary Value Transducer 1 → 1 AI2 Secondary Value Transducer 1 → 2 AI3 Primary Value Transducer 2 → 2 AI4 Secondary Value Transducer 2 → 3

Menu item	Parameter name	Parameter access	Description
	Alarm sum	**General information on the "Alarm sum" parameter group:** The Active Block Alarm is supported, which indicates a change to a parameter with static parameters (Static attribute) for 10 sec. and displays that a warning or alarm limit was violated in the Analog Input function block. **Display values:** 0x0000 No alarm 0x0200 Upper alarm limit value 0x0400 Upper warning limit value 0x0800 Lower alarm limit value 0x1000 Lower warning limit value 0x8000 Parameter set changed	
(Only visible in online mode)	Current alarm sum	Read	Displays the device's current alarms.
	Unacknowledged state alarm sum	Read	Displays the device's unacknowledged alarms.
	Unreported state alarm sum	Read	
	Disabled state alarm sum	Read	Displays the device's acknowledged alarms.
	Out unit text	Read/write	Use this function to enter ASCII text if the required unit is not available in the OUT UNIT (output unit) parameter.
(Only visible in online mode)	Output value	Read	Displays the OUT (output) value of the process variable selected in the CHANNEL parameter
(Only visible in online mode)	Quality	Read	Displays the quality (measured value status) for the "Output value". 0x80 - Good 0x84 - Good: Parameters changed 0x88 - Good: Warning limit 0x8C - Good: Alarm limit 0x90 - Good: Unacknowledged block alarm (Pr. 3.0/ 3.01) 0x94 - Good: Unacknowledged warning (Pr. 3.0/3.01) 0x98 - Good: Unacknowledged alarm (Pr. 3.0/3.01) 0xA0 - Good: Go to failsafe mode 0xA4 - Good: Maintenance required 0xA8 - Good: Request for maintenance (Pr. 3.02) 0xBC - Good: Function check/local overrride (3.02) 0x40 - Uncertain (Pr. 3.0/3.01) 0x44 - Uncertain: Last usable value (Pr. 3.0/3.01) 0x48 - Uncertain: Substitute value (0x4B in Pr. 3.02) 0x4C - Uncertain: Initial value (0x4F in Pr. 3.02) 0x50 - Uncertain: Value inaccurate (Pr. 3.0/3.01) 0x54 - Uncertain: Outside value range (Pr. 3.0/3.01) 0x58 - Uncertain: Abnormal (Pr. 3.0/3.01) 0x5C - Uncertain: Configuration error (Pr. 3.0/ 3.01) 0x60 - Uncertain: Simulation value (Pr. 3.0/3.01) 0x64 - Uncertain: Simulated value, start 0x68 - Uncertain: Request for maintenance (Pr. 3.02) 0x73 - Uncertain: Simulated value, start (Pr. 3.02) 0x74 - Uncertain: Simulated value, end (Pr. 3.02) 0x78 - Uncertain: Process fault/no maintenance required (Pr. 3.02) 0x00 - Bad (Pr. 3.0/3.01) 0x04 - Bad: Configuration error (Pr. 3.0/ 3.01) 0x08 - Bad: No connection (Pr. 3.0/3.01) 0x0C - Bad: Device error (Pr. 3.0/3.01) 0x10 - Bad: Sensor error (Pr. 3.0/3.01) 0x14 - Bad: Last usable value (no comm., Pr. 3.0/3.01) 0x18 - Bad: No usable value (no comm., (Pr. 3.0/3.01) 0x1C - Bad: Out of service (Pr. 3.0/3.01) 0x23 - Bad: Passive (Pr. 3.02) 0x24 - Bad: Maintenance alarm (Pr. 3.02) 0x2B - Bad: Process fault/no maintenance required (Pr. 3.02) 0x3C - Bad: Function check/local override (Pr. 3.02)	

Menu item	Parameter name	Parameter access	Description
	Status	Read	Displays the limit (measured value status) for the "Output value" 0x00 - OK 0x01 - Limit undershot 0x02 - Limit overshot 0x03 - Value constant
	Filter time constant	Read/write	Use this function to enter the filter time constant (in seconds) of the 1st order digital filter. This time is required in order for 63% of a change in the Analog Input (input value) to have an effect on OUT (output value). The diagram shows the time-dependent signal characteristics of the Analog Input function block: 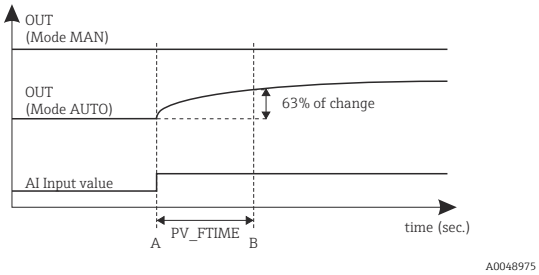 A → The Analog Input changes. B → OUT has reacted 63% to the change of the Analog Input. **Factory setting:** 0 s
	PV SCALE	In the PV SCALE parameter group, the process variable is standardized to one value by means of the "Lower Value" and "Upper Value" parameters using the unit of the connected Transducer Block. For an example of rescaling the input value, see → 🗎 87	
	PV SCALE lower value	Read/write	This parameter is used to enter the lower value for input scaling. **Factory setting:** 0
	PV SCALE upper value	Read/write	This parameter is used to enter the upper value for input scaling. **Factory setting:** 100
	OUT SCALE	In the OUT SCALE parameter group, the measuring range (lower and upper limit) and the physical unit for the output value (Out value) are defined. The following parameters are available in this parameter group: ▪ Out Scale - lower value ▪ Out Scale - upper value ▪ Unit ▪ Decimal point ℹ Defining the measuring range in this parameter group does not restrict the output value "Out value". If the output value "Out value" is outside the measuring range, it is transferred nonetheless.	
	Out Scale - upper value	Read/write	Use this function to enter the upper value for output scaling. **Factory setting:** 100
	Out Scale - lower value	Read/write	Use this function to enter the lower value for output scaling. **Factory setting:** 0

Menu item	Parameter name	Parameter access	Description
	Unit	Read/write	Use this function to select the output unit. **Factory setting:** Analog Input function block = 0x07CD (1997) = none OUT UNIT (output unit) does not affect measured value scaling.
	Decimal point	Read/write	Specifies the number of places after the decimal point for the output value "Out value". This parameter is not supported by the device.
	Upper limit alarm	Read/write	Use this function to enter the alarm limit value for the upper warning (HI ALM). If the output value OUT exceeds this limit value, the HI ALM alarm status parameter is output. **User input:** Unit from OUT SCALE **Factory setting:** Max value
	Upper limit warning	Read/write	Use this function to enter the alarm limit value for the upper alarm (HI HI ALM). If the output value OUT exceeds this limit value, the HI HI ALM alarm status parameter is output. **User input:** Unit from OUT SCALE **Factory setting:** Max value
	Lower limit warning	Read/write	Use this function to enter the alarm limit value for the lower warning (LO ALM). If the output value OUT is below this limit value, the LO ALM alarm status parameter is output. **User input:** Unit from OUT SCALE **Factory setting:** Min value
	Lower limit alarm	Read/write	Use this function to enter the alarm limit value for the lower alarm (LO LO ALM). If the output value OUT is below this limit value, the LO LO ALM alarm status parameter is output. **User input:** Unit from OUT SCALE **Factory setting:** Min value

Menu item	Parameter name	Parameter access	Description
	Limit value hysteresis	Read/write	Use this function to enter the hysteresis value for the upper and lower warning or alarm limit values. The alarm conditions remain active as long as the measured value is within the hysteresis. The hysteresis value affects the following warning and alarm limit values of the Analog Input function block: HI HI ALM → Upper limit alarm HI ALM → Upper limit warning LO LO ALM → Lower limit alarm LO ALM → Lower limit warning **User input:** 0 to 50% **Factory setting:** 0.5% of measuring range ▪ The hysteresis value refers to a percentage of the range of the OUT SCALE parameter group in the Analog Input function block. ▪ If the limit values are entered in FieldCare, ensure that absolute values can be displayed and entered. **Example:** ▪ The top diagram shows the defined limit values for the warnings LO LIM and HI LIM with their respective hystereses (gray background) and the signal characteristics of the output value OUT. ▪ The two bottom diagrams show the behavior of the associated alarms HI ALM and LO ALM on the changing signal characteristics (0 = no alarm, 1 = alarm is output). 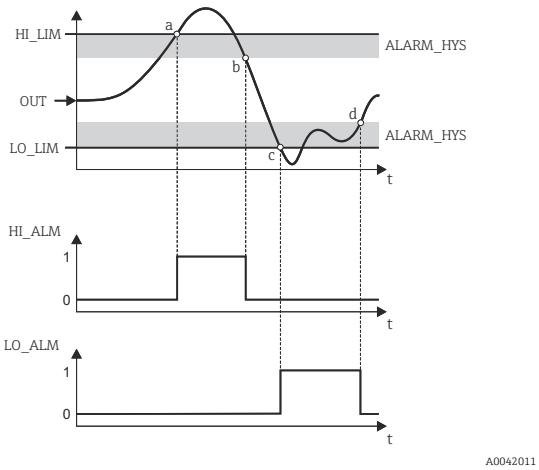 *a* *Output value OUT exceeds the limit value HI LIM, HI ALM is active.* *b* *Output value OUT drops below the hysteresis value of HI LIM, HI ALM is inactive.* *c* *Output value OUT drops below the limit value LO LIM, LO ALM is active.* *d* *Output value OUT exceeds the hysteresis value of LO LIM, LO ALM is inactive.*

Menu item	Parameter name	Parameter access	Description
	Fail safe mode	Read/write	Use this function to select the failsafe mode in the event of a device error or bad measured value. ACTUAL MODE (current operating mode of the block) remains in AUTO MODE (automatic operating mode). The status information only applies to diagnostics according to Profile 3.0/3.01. For Profile 3.02, see Section 11.2.2 → 🗎 41. **Options:** ▪ FSAFE VALUE (The substitute value is adopted in the output value) When this option is selected, the value entered in the "Fail Safe Default Value" parameter is displayed in OUT (output value). The status changes to UNCERTAIN - SUBSTITUTE VALUE. ▪ LAST GOOD VALUE (The last valid output value saved is adopted in the output value) The output value valid before the failure is used. The status is set to UNCERTAIN – LAST USABLE VALUE. If there was no valid value previously, the initial value is provided with the status UNCERTAIN – INITIAL VALUE (for values not saved during a device reset). The initial value of the Profibus PA device is "0". ▪ WRONG VALUE (Incorrect measured value at the output value) The value is still used for further calculation despite the bad status. **Factory setting:** WRONG VALUE
	Failsafe default value	Read/write	This parameter is used to enter a default value to be displayed when there is an error in OUT (output value) **Factory setting:** 0
	AI(n) simulation quality	Read/write	Simulation of Analog Input function block quality. For the list of options, see → 🗎 87 **Factory setting:** Bad
	AI(n) simulation status	Read/write	Simulation of Analog Input function block status. 0x00 - OK 0x01 - Limit undershot 0x02 - Limit overshot 0x03 - Value constant
	AI(n) simulation value	Read/write	Simulation of the input value. Since this value runs through the entire algorithm, the behavior of the Analog Input function block can be checked. **Factory setting:** 0.0
	AI(n) simulation	Read/write	Enable/disable simulation. **Options:** Simulation not active Simulation active **Factory setting:** Simulation not active

14.3.4 Group Diagnostics

All the information that describes the device, the device status and the process conditions can be found in this group. The individual parameters are summarized in the Diagnostics menu in this section:

Diagnostics

Menu item	Parameter name	Parameter access	Description
	Current diagnostics	Read	Displays the diagnostic code. The diagnostic code consists of the "Current status" and the "Current error code". **Example:** F041 (Failure + sensor failure)
	Description of current diagnostics	Read	Displays the status information as a description text, → 📄 43
	Channel information status	Read	Displays where in the device the highest priority error occurs. ▪ 0: Device ▪ 1: Sensor 1 ▪ 2: Sensor 2
	Number status	Read	The number of status messages currently pending in the device.
	Diagnostics	Read	Diagnostics information of the device encoded in bits. **Current status number:** ▪ 0 - Status OK ▪ 0x01000000 - Hardware failure electronics. ▪ 0x02000000 - Hardware failure mechanics. ▪ 0x08000000 - Electronics temperature too high. ▪ 0x10000000 - Memory checksum error. ▪ 0x20000000 - Failure in measurement. ▪ 0x80000000 - Self-calibration failed. ▪ 0x00040000 - Configuration not valid. ▪ 0x00080000 - New start-up (warm start-up) carried out. ▪ 0x00100000 - Restart (cold start-up) carried out. ▪ 0x00200000 - Maintenance required. ▪ 0x00800000 - Ident number violation. ▪ 0x00000100 - Failure of the device. ▪ 0x00000200 - Maintenance demanded. ▪ 0x00000400 - Function check or simulation mode. ▪ 0x00000800 - Out of specification. ▪ 0x00000080 - More information available.
	Last diagnostics	Read	Displays the last diagnostic code. The diagnostic code consists of the "Current status" and the "Last error code". Example: F041 (Failure + sensor failure)
	Last channel information status	Read	Displays where in the device the last priority error occurs. 0: Device 1: Sensor 1 2: Sensor 2
	Delete last diagnostics	Read/write	The last diagnostics information can be deleted. 0: Show last error 1: Delete last error **Factory setting:** 0
	Advanced diagnostics	Read	Manufacturer-specific diagnostics information encoded in bits. Several messages are possible. See "Status diagnostics bits" at the end of these instructions.
	Advanced diagnostics screen	Read	Displays the bit mask that outputs the manufacturer-specific diagnostic messages

Menu item	Parameter name	Parameter access	Description
(only visible in online mode)	Enabled functions	Read	FEATURE.Enabled: X=0 → Accumulative status and diagnostics supported/ diagnostics as per Profile 3.01/3.0. X=1 → Diagnostics as per Profile 3.02/extended status/ diagnostics are supported. **Factory setting:** X=1
	Supported functions	Read	FEATURE.Enabled: X=0 → Accumulative status and diagnostics supported/ diagnostics as per Profile 3.01/3.0. X=1 → Diagnostics as per Profile 3.02/extended status/ diagnostics are supported. **Factory setting:** X=1
	Configuration for accumulative status and diagnostics	Read/write	Displays whether "Condensed Status & Diagnostic Messages" is used. 0=Status and diagnostics as described in Profile 3.01 1=Support for accumulative status and diagnostics 2-255=Reserved for the Profibus User Organization **Factory setting:** 1
(only visible in online mode)	Service locking	Read/write	Configuration for enabling ENP service parameters.

Submenu System information

In addition to the system information described from → 📄 77 onwards, the following parameter is also available in the Expert setup.

Diagnostics

Menu item	Parameter name	Parameter access	Description
Submenu System information	UpDown Feature Supported	Read	0x00: Upload Supported 0x01: Parallel Upload Supported 0x02: Download Supported 0x03: Two Buffer Device **Factory setting:** Upload Supported

Submenu Measured values

This menu is only visible in the online mode.

All the measured values with their related status information are displayed in the "Measured values" Expert menu. Furthermore, the unscaled, unlinearized measured value of the sensor input in question can be read out by means of the "Raw value" parameter. For example, in the case of a Pt100, the actual Ohm value that can be used to calibrate and calculate Callendar-Van Dusen coefficients is displayed.

ℹ n: Number of the Transducer Block (1-2) or the sensor input (1 or 2)

Diagnostics

Menu item	Parameter name	Parameter access	Description
Submenu Measured values	PV value n	Read	Displays the primary output value of the Transducer Block. The PV value n can be made available to an AI Block for further processing. The quality of the measured value is displayed with the "Quality" and "Status" parameters.
	PV value n - quality	Read	Displays the quality (measured value status) for the PV value. For list of options, see → 87
	PV value n - status	Read	Displays the limit (measured value status) for the PV value. 0x00 - OK 0x01 - Limit undershot 0x02 - Limit overshot 0x03 - Value constant
	Process temperature n	Read	Displays the measured value of sensor n
	Process temperature n - quality	Read	Displays the quality (measured value status) of the process temperature for sensor n. For value, see "PV value n - quality"
	Process temperature n - status	Read	Displays the limit (measured value status) of the process temperature for sensor n. For value, see "PV value n - status"
	RJ temperature	Read	Displays the internal reference temperature
	RJ temperature - quality	Read	Displays the quality (measured value status) of the internal reference temperature. For value, see "PV value n - quality"
	RJ temperature - status	Read	Displays the status (measured value status) of the internal reference temperature. For value, see "PV value n - status"
	Sensor value n (not linearized)	Read	Displays the non-linearized mV/Ohm of the corresponding sensor.

14.4 Slot/Index lists

14.4.1 General explanatory remarks

Abbreviations used in the Slot/Index lists:

Endress+Hauser matrix → The number of the page in which you will find the explanation of the parameter. Object Type:
- Record → Contains data structures (DS)
- Simple → Contains only single data types (e.g. float, integer, etc.)

Parameters:
- M → Mandatory parameter
- O → Optional parameter

Data Types:
- DS → Data structure, contains data types such as Unsigned8, OctetString, etc.
- Float → IEEE 754 format
- Integer → 8 (range of values -128 to 127), 16 (-327678 to 327678), 32 (-2^{31} to 2^{31})

- Octet String → Binary coded
- Unsigned → 8 (range of values 0 to 255), 16 (0 to 65535), 32 (0 to 4294967295)
- Visible String → ISO 646, ISO 2375

Storage Class:
- C → Calibration data
- Cst → Constant parameter
- D → Dynamic parameter
- N → Non-volatile parameter. Changing a parameter in this class does not affect the ST_REV parameter of the block in question
- S → Static parameter. Changing a parameter in this class increases the ST_REV parameter of the block in question
- V → Storage class V means that the altered parameter value is not saved in the device

14.4.2 Device management slot 1

Parameter name	Index	Read	Write	Object Type	Data Type	Byte Size	Storage Class	Parameter	Default value
Device Management Slot 1									
Directory Header/ Composite Directory Entries	0	X		Record	Unsigned 16	12	Cst	M	
Composite Directory Entry/ Composite Directory Entries	1	X		Record	Unsigned 16	28	Cst	M	
Not used	2 - 15	-	-	-	-	-	-	-	

14.4.3 Physical Block slot 0

Parameter name	Index	Read	Write	Object Type	Data Type	Byte Size	Storage Class	Parameter
Physical Block Slot 0								
Not used	0 - 15	X	-	-	-	-	-	-
BLOCK_OBJECT	16	X	-	Record	DS-32	20	Cst	M
ST_REV	17	X	-	Simple	Unsigned16	2	N	M
TAG_DESC	18	X	X	Simple	Octet String	32	S	M
STRATEGY	19	X	X	Simple	Unsigned 16	2	S	M
ALERT_KEY	20	X	X	Simple	Unsigned 8	1	S	M
TARGET_MODE	21	X	X	Simple	Unsigned 8	1	S	M
MODE_BLK	22	X	-	Record	DS-37	3	D	M
ALARM_SUM	23	X	-	Record	DS-42	8	D	M
SOFTWARE_REVISION	24	X	-	Simple	Visible String	16	Cst	M
HARDWARE_REVISION	25	X	-	Simple	Visible String	16	Cst	M
DEVICE MAN_ID	26	X	-	Simple	Unsigned 16	2	Cst	M
DEVICE_ID	27	X	-	Simple	Visible String	16	Cst	M
DEVICE SER NUM	28	X	-	Simple	Visible String	16	Cst	M
DIAGNOSIS	29	X	-	Simple	Octet String	4	D	M
DIAGNOSIS_EXTENSION	30	X	-	Simple	Octet String	6	D	O

Parameter name	Index	Read	Write	Object Type	Data Type	Byte Size	Storage Class	Parameter
DIAGNOSIS_MASK	31	X	-	Simple	Octet String	4	Cst	M
DIAGNOSIS_MASK_EXTENSION	32	X	-	Simple	Octet String	6	Cst	O
DEVICE CERTIFICATION	33	X	-	Simple	Visible String	32	Cst	O
Not used	34	-	-	-	-	-	-	-
FACTORY_RESET	35	X	X	Simple	Unsigned 16	2	S	O
DESCRIPTOR	36	X	X	Simple	Octet String	32	S	O
DEVICE MESSAGE	37	X	X	Simple	Octet String	32	S	O
DEVICE INSTAL DATE	38	X	X	Simple	Octet String	16	S	O
Not used	39	-	-	-	-	-	-	-
IDENT_NUMBER_SELECTION	40	X	X	Simple	Unsigned 8	1	S	O
HW_WRITE_PROTECTION	41	X	-	Simple	Unsigned 8	1	D	O
FEATURE	42	X	-	Record	DS-68	8	N	M
COND_STATUS_DIAGNOSIS	43	X	X		Unsigned 8	1	S	M
Not used	44-53	-	-	-	-	-	-	-
ACTUAL_ERROR_CODE	54	X	-	Simple	Unsigned 16	2	D	M
LAST_ERROR_CODE	55	X	-	Simple	Unsigned 16	2	D/S	M
UPDOWN_FEAT_SUPP	56	X	-	Simple	Octet String	1	Const	M
Not used	57-58	-	-	-	-	-	-	-
DEVICE_BUS_ADDRESS	59	X	-	Simple	Unsigned 8	1	D	M
Not used	60	-	-	-	-	-	-	-
SET UNIT TO BUS	61	X	X	Simple	Unsigned 8	1	V	M
DISPLAY_VALUE	62	X	-	Record	LocalDispVal	6	D	O
Not used	63	-	-	-	-	-	-	-
PROFILE_REVISION	64	X	-	Simple	Octet String	32	Cst(D)	M
CLEAR_LAST_ERROR	65	X	X	Simple	Unsigned 8	1	V	M
IDENT_NUMBER	66	X	-	Simple	Unsigned 16	2	D	M
CHECK_CONFIGURATION	67	X	-	Simple	Unsigned 8	1	D	O
Not used	68	-	-	-	-	-	-	-

Parameter name	Index	Read	Write	Object Type	Data Type	Byte Size	Storage Class	Parameter
ORDER_CODE	69	X	-	Simple	Visible String	32	C	M
TAG_LOCATION	70	X	X	Simple	Visible String	22	C	O
SIGNATURE	71	X	X	Simple	Octet String	54	C	O
ENP_VERSION	72	X	-	Simple	Visible String	16	Cst	M
DEVICE_DIAGNOSIS	73	X	-	Simple	Octet String	10	D	M
EXTENDED_ORDER_CODE	74	X	-	Simple	Visible String	60	C	M
SERVICE_LOCKING	75	X	X	Simple	Unsigned 16	2	D	M
Not used	76 - 94	-	-	-	-	-	-	-
STATUS	95	X	-	Simple	Octet String	16	D	O
DIAGNOSTICS_CODE	96	X	-	Simple	Octet String	4	D	O
STATUS_CHANNEL	97	X	-	Simple	Unsigned 8	1	D	O
STATUS_COUNT	98	X	-	Simple	Unsigned 8	1	D	O
LAST_STATUS	99	X	-	Simple	Octet String	16	D/S	O
LAST_DIAGNOSTICS_CODE	100	X	-	Simple	Octet String	4	D/S	O
LAST_STATUS_CHANNEL	101	X	-	Simple	Unsigned 8	1	D/S	O
Not used	102 - 103	-	-	-	-	-	-	-
VERSIONINFO SWREV	104	X	-	Simple	Octet String	16	N	O
VERSIONINFO HWREV	105	X	-	Simple	Octet String	16	N	O
VERSIONINFO DEVREV	106	X	-	Simple	Octet String	16	N	O
ELECTRONICAL_SERIAL_NUMBER	107	X	-	Simple	Visible String	16	Cst	M
Not used	108 - 112	-	-	-	-	-	-	-
DEV_BUS_ADDR_CONFIG	113	X	X	Simple	Unsigned 8	1	N	O
CAL_IDENTNUMBER	114	X	-	Simple	Unsigned 16	2	C	O
Not used	115 - 118	-	-	-	-	-	-	-
SENSOR_DRIFT_MONITORING	118	X	X	Simple	Unsigned 8	1	S	MS
SYSTEM_ALARM_DELAY	119	X	X	Simple	Unsigned 8	1	S	O
MAINS_FILTER	120	X	X	Simple	Unsigned 8	1	S	O
AMBIENT_ALARM	121	X	X	Simple	Unsigned 8	1	S	O
Not used	122 - 125	-	-	-	-	-	-	-

Parameter name	Index	Read	Write	Object Type	Data Type	Byte Size	Storage Class	Parameter
DISP_ALTERNATING_TIME	126	X	X	Simple	Unsigned 8	1	S	O
DISP_SOURCE_1	127	X	X	Simple	Unsigned 16	2	S	O
DISP_VALUE_1_DESC	128	X	X	Simple	Octet String	16	S	O
DIS_VALUE_1_FORMAT	129	X	X	Simple	Unsigned 8	1	S	O
DISP_SOURCE_2	130	X	X	Simple	Unsigned 16	2	S	O
DISP_VALUE_2_DESC	131	X	X	Simple	Octet String	16	S	O
DISP_VALUE_2_FORMAT	132	X	X	Simple	Unsigned 8	1	S	O
DISP_SOURCE_3	133	X	X	Simple	Unsigned 16	2	S	O
DISP_VALUE_3_DESC	134	X	X	Simple	Octet String	16	S	O
DISP_VALUE_3_FORMAT	135	X	X	Simple	Unsigned 8	1	S	O
Not used	136 - 139	-	-	-	-	-	-	-
VIEW_PHYSICAL_BLOCK	140	X	X	Simple	Unsigned16, DS-37, DS- 42, OctetString[4]	17	D	M

14.4.4 Transducer Block slot 1

Parameter name	Index	Read	Write	Object Type	Data Type	Byte Size	Storage Class	Parameter
BLOCK_OBJECT	70	X	-	Record	DS-32	20	C	M
ST_REV	71	X	-	Simple	Unsigned16	2	S	M
TAG_DESC	72	X	X	Simple	Octet String	32	S	M
STRATEGY	73	X	X	Simple	Unsigned 16	2	S	M
ALERT_KEY	74	X	X	Simple	Unsigned 8	1	S	M
TARGET_MODE	75	X	X	Simple	Unsigned 8	1	S	M
MODE_BLK	76	X	-	Record	DS-37	3	D	M
ALARM_SUM	77	X	-	Record	DS-42	8	D	M
PRIMARY_VALUE	78	X	-	Record	101	5	D	M
PRIMARY_VALUE_UNIT	79	X	X	Simple	Unsigned 16	2	S	M
SECONDARY_VALUE_1	80	X	-	Record	101	5	D	M
SECONDARY_VALUE_2	81	X	-	Record	101	5	D	M
SENSOR_MEAS_TYPE	82	X	X	Simple	Unsigned 8	1	S	M

Parameter name	Index	Read	Write	Object Type	Data Type	Byte Size	Storage Class	Parameter
INPUT_RANGE	83	X	X	Simple	Unsigned 8	1	S	M
LIN_TAPE	84	X	X	Simple	Unsigned 8	1	S	M
Not used	85 - 88	-	-	-	-	-	-	-
BIAS_1	89	X	X	Simple	Float	4	S	M
Not used	90	-	-	-	-	-	-	-
UPPER_SENSOR_LIMIT	91	X		Simple	Float	4	N	M
LOWER_SENSOR_LIMIT	92	X		Simple	Float	4	N	M
Not used	93	-	-	-	-	-	-	-
INPUT_FAULT_GEN	94	X	-	Simple	Unsigned 8	1	D	M
INPUT_FAULT_1	95	X	-	Simple	Unsigned 8	1	D	M
Not used	96 - 98	-	-	-	-	-	-	-
MAX_SENSOR_VALUE_1	99	X	X	Simple	Float	4	N	O
MIN_SENSOR_VALUE_1	100	X	X	Simple	Float	4	N	O
Not used	101 - 102	-	-	-	-	-	-	-
RJ_TEMP	103	X	-	Simple	Float	4	D	O
RJ_TYPE	104	X	X	Simple	Unsigned 8	1	S	M
EXTERNAL_RJ_VALUE	105	X	X	Simple	Float	4	S	O
SENSOR_CONNECTION	106	X	X	Simple	Unsigned 8	1	S	M
COMP_WIRE1	107	X	-	Simple	Float	4	S	M
Not used	108 - 131	-	-	-	-	-	-	-
MAX_PV	132	X	X	Simple	Float	4	N	M
MIN_PV	133	X	X	Simple	Float	4	N	M
CVD_COEFF_A	134	X	X	Simple	Float	4	S	M
CVD_COEFF_B	135	X	X	Simple	Float	4	S	M
CVD_COEFF_C	136	X	X	Simple	Float	4	S	M
CVD_COEFF_R0	137	X	X	Simple	Float	4	S	M
CVD_MAX	138	X	X	Simple	Float	4	S	M
CVD_MIN	139	X	X	Simple	Float	4	S	M
Not used	140 - 144	-	-	-	-	-	-	-
CAL_POINT_HI	145	X	X	Simple	Float	4	S	M
CAL_POINT_LO	146	X	X	Simple	Float	4	S	M
CAL_POINT_SPAN	147	X	-	Simple	Float	4	S	M

Parameter name	Index	Read	Write	Object Type	Data Type	Byte Size	Storage Class	Parameter
CAL_POINT_TEMP_LO	148	X	X	Simple	Float	4	S	M
CAL_POINT_TEMP_HI	149	X	X	Simple	Float	4	S	M
CAL_METHOD	150	X	X	Simple	Unsigned 8	2	S	M
SENSOR_SERIAL_NUMBER	151	X	X	Simple	Octet String	32	S	M
POLY_COEFF_A	152	X	X	Simple	Float	4	S	M
POLY_COEFF_B	153	X	X	Simple	Float	4	S	M
POLY_COEFF_C	154	X	X	Simple	Float	4	S	M
POLY_COEFF_R0	155	X	X	Simple	Float	4	S	M
POLY_MEAS_RANGE_MAX	156	X	-	Simple	Float	4	S	M
POLY_MEAS_RANGE_MIN	157	X	-	Simple	Float	4	S	M
Not used	158 - 161	-	-	-	-	-	-	-
CORROSION_DETECTION	162	X	X	Simple	Unsigned 8	2	S	M
CORROSION_CYCLES	163	X	-	Simple	Unsigned 8	2	S	M
SENSOR_DRIFT_ALERT_VALUE	164	X	X	Simple	Float	4	S	M
Not used	165 - 168	-	-	-	-	-	-	-
RJ_MAX_SENSOR_VALUE	169	X	-	Simple	Float	4	N	M
RJ_MIN_SENSOR_VALUE	170	X	-	Simple	Float	4	N	M
Not used	171	-	-	-	-	-	-	-
TEMPERATURE_THRESHOLD	172	X	X	Simple	Float	4	S	M
RJ_OUT	173	X	-	Record	101	5	D	M
SENSOR_RAW_VALUE	174	X	-	Simple	Float	4	D	M
Not used	175 - 219	-	-	-	-	-	-	-
VIEW_TRANSDUCER_BLOCK	220	X	-	Simple	Unsigned16, DS-37, DS- 42, 101, Unsigned8, Unsigned8	20	D	M

14.4.5 Transducer Block slot 2

Transducer Block slot 2 contains the same parameters as Transducer Block slot 1. The settings in slot 2 affect sensor input 2.

Parameter name	Index	Read	Write	Object Type	Data Type	Byte Size	Storage Class	Parameter
All parameters → 🗎 102	70 - 220	-	-	-	-	-	-	-

14.4.6 Analog Input Block (AI 1) slot 1

Parameter name	Index	Read	Write	Object Type	Data Type	Byte Size	Storage Class	Parameter
Not used	2 - 15	X	-	-	-	-	-	-
BLOCK_OBJECT	16	X	-	Record	DS-32	20	C	M
ST_REV	17	X	-	Simple	Unsigned 16	2	N	M
TAG_DESC	18	X	X	Simple	Octet String	32	S	M
STRATEGY	19	X	X	Simple	Unsigned 16	2	S	M
ALERT_KEY	20	X	X	Simple	Unsigned 8	1	S	M
TARGET_MODE	21	X	X	Simple	Unsigned 8	1	S	M
MODE_BLK	22	X	-	Record	DS-37	3	D	M
ALARM_SUM	23	X	-	Record	DS-42	8	D	M
BATCH	24	X	X	Record	DS-67	10	S	M
Not used	25	X	-	-	-	-	-	-
OUT	26	X	-	Record	101	5	D	M
PV_SCALE	27	X	X	Array	Float	8	S	M
OUT_SCALE	28	X	X	Record	DS-36	11	S	M
LIN_TYPE	29	X	X	Simple	Unsigned 8	1	S	M
CHANNEL	30	X	X	Simple	Unsigned 16	2	S	M
Not used	31	X	-	-	-	-	-	-
PV_FTIME	32	X	X	Simple	Float	4	S	M
FSAFE_TYPE	33	X	X	Simple	Unsigned 8	1	S	O
FSAFE_VALUE	34	X	X	Simple	Float	4	S	O
ALARM_HYS	35	X	X	Simple	Float	4	S	M
Not used	36	X	-	-	-	-	-	-
HI_HI_LIM	37	X	X	Simple	Float	4	S	M
Not used	38	X	-	-	-	-	-	-
HI_LIM	39	X	X	Simple	Float	4	S	M
Not used	40	X	-	-	-	-	-	-
LO_LIM	41	X	X	Simple	Float	4	S	M
Not used	42	X	-	-	-	-	-	-
LO_LO_LIM	43	X	X	Simple	Float	4	S	M
Not used	44 - 45	-	-	-	-	-	-	-
HI_HI_ALM	46	X	-	Record	DS-39	16	D	O

Parameter name	Index	Read	Write	Object Type	Data Type	Byte Size	Storage Class	Parameter
HI_ALM	47	X	-	Record	DS-39	16	D	O
LO_ALM	48	X	-	Record	DS-39	16	D	O
LO_LO_ALM	49	X	-	Record	DS-39	16	D	O
SIMULATE	50	X	X	Record	DS-50	6	S	O
OUT UNIT TEXT	51	X	X	Simple	Octet String	16	S	O
Not used	52 - 64	-	-	-	-	-	-	-
VIEW_AI	65	X	-	Record	Unsigned16, DS- 37, DS-42, 101	18	D	M
Not used	66 - 69	-	-	-	-	-	-	-

14.4.7 Analog Input Block (AI 2) slot 2

Analog Input Block slot 2 contains the same parameters as Analog Input Block slot 1.

Parameter name	Index	Read	Write	Object Type	Data Type	Byte Size	Storage Class	Parameter
All parameters → 🗎 105	0 - 65	-	-	-	-	-	-	-
Not used	66 - 69	-	-	-	-	-	-	-

14.4.8 Analog Input Block (AI 3) slot 3

Analog Input Block slot 3 contains the same parameters as Analog Input Block slot 1.

Parameter name	Index	Read	Write	Object Type	Data Type	Byte Size	Storage Class	Parameter
All parameters → 🗎 105	0 - 65	-	-	-	-	-	-	-
Not used	66 - 225	-	-	-	-	-	-	-

14.4.9 Analog Input Block (AI 4) slot 4

Analog Input Block slot 4 contains the same parameters as Analog Input Block slot 1.

Parameter name	Index	Read	Write	Object Type	Data Type	Byte Size	Storage Class	Parameter
All parameters → 🗎 105	0 - 65	-	-	-	-	-	-	-
Not used	66 - 225	-	-	-	-	-	-	-

Index

A
Accessories
- Communication-specific 51
- Device-specific 51

C
Cable type 19
CE mark 9
Connection combinations 18

D
Declaration of Conformity 9
Disposal 50
Document
- Function 4

Document function 4

F
Field devices, number 20
FieldCare
- Function scope 29

I
Installation location
- DIN rail (DIN rail clip) 12
- Field housing 12
- Terminal head, flat face as per DIN 43729 12

Intended use 8

M
Maximum overall cable length 20
Maximum spur length 20

N
Number of field devices 20

O
Operation options
- Local operation 25
- Operating tool 25
- Overview 25

Operational safety 8
Overall cable length 20

P
Product safety 9

R
Requirements for personnel 8
Return 50

S
Solid wire 18
Spur length 20

T
Terminal assignment 17

W
Wire without wire end ferrule 19
Workplace safety 8

71789099

www.addresses.endress.com

Endress+Hauser

People for Process Automation