TI01413F/00/EN/01.18
71423741
2018-11-30

Technical Information
Liquipoint FTW33 IO-Link

Conductive and capacitance point level measurement

Point level switch for liquid and pasty media in the food and beverage industry

Application

The Liquipoint FTW33 is a point level switch for liquid and pasty media.

It is used preferably in storage tanks, mixing vessels and pipes. Developed and built for the food and beverage industry, the Liquipoint FTW33 meets international hygiene requirements.

It is particularly suited to applications where flush-mounting is necessary.

The Liquipoint FTW33 can be used permanently in process temperatures up to 100 °C (212 °F) and in cleaning and sterilization processes to 150 °C (302 °F) for 60 minutes.

The Liquipoint FTW33 can also be used for detecting the foam that commonly occurs within the food and beverage industry.

Your benefits

- Flush-mounted installation, pipes remain piggable
- For water- and oil-based media with an $\varepsilon_r \geq 2$
- Individual adjustment to each medium not necessary
- Reliable switching function due to compensation even in the case of heavy buildup
- Easy installation thanks to compact design - even in tight conditions or where access is restricted
- Wide range of process connections for installation in new or existing systems
- Robust stainless steel housing, optionally available with M12 x 1 connector with IP69K protection
- Onsite function check via LED indication
- Can be cleaned and sterilized in place (CIP/SIP)
- 3-A and EHEDG certificates
- Meets the requirements of EU 1935/2004, 10/2011 as well as 2023/2006 and FDA 21 CFR 177.2415

Endress+Hauser
People for Process Automation

Table of contents

About this document

Symbols used

Symbols for certain types of information and graphics

✅
Permitted
Procedures, processes or actions that are permitted

✅✅
Preferred
Procedures, processes or actions that are preferred

❌
Forbidden
Procedures, processes or actions that are forbidden

ℹ
Tip
Indicates additional information

▶
Notice or individual step to be observed

1., 2., 3.
Series of steps

↳
Result of a step

1, 2, 3, ...
Item numbers

A, B, C, ...
Views

Hazardous area
Indicates the hazardous area

Safe area (non-hazardous area)
Indicates the non-hazardous area

⚠ → 📖
Safety instructions
Observe the safety instructions contained in the associated Operating Instructions

Documentation

The following documentation types are available in the Downloads of the Endress+Hauser website (www.endress.com/downloads):

ℹ For an overview of the scope of the associated Technical Documentation, refer to the following:
- *W@M Device Viewer* (www.endress.com/deviceviewer): Enter the serial number from nameplate
- *Endress+Hauser Operations App*: Enter the serial number from the nameplate or scan the 2D matrix code (QR code) on the nameplate

Brief Operating Instructions (KA)

Guide that takes you quickly to the 1st measured value
The Brief Operating Instructions contain all the essential information from incoming acceptance to initial commissioning.

Operating Instructions (BA)

Your reference guide
These Operating Instructions contain all the information that is required in various phases of the life cycle of the device: from product identification, incoming acceptance and storage, to mounting, connection, operation and commissioning through to troubleshooting, maintenance and disposal.

Safety Instructions (XA)

Depending on the approval, the following Safety Instructions (XA) are supplied with the device. They are an integral part of the Operating Instructions.

The nameplate indicates the Safety Instructions (XA) that are relevant to the device.

Function and system design

Measuring principle

A low, galvanically isolated AC voltage is applied at the electrode in contact with the process. If liquid or pasty media come in contact with the electrode, a measurable current flows and the Liquipoint switches. Active buildup compensation ensures reliable switching of the measuring device even if buildup occurs on the sensor.

Measuring system

The measuring system consists of a point level switch, e.g. for connection to programmable logic controllers (PLC).

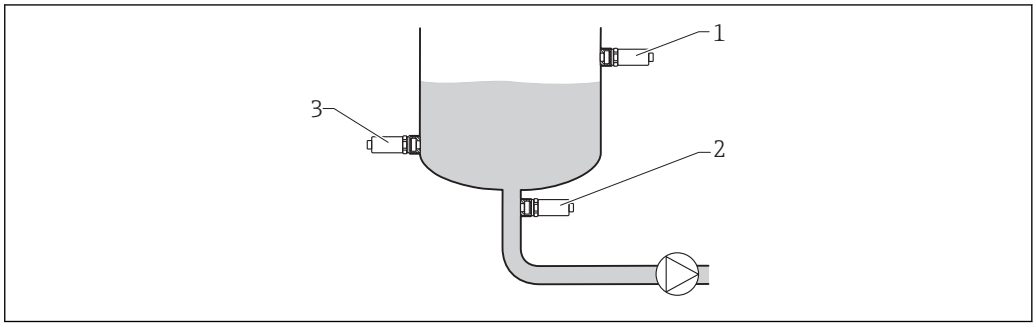

A0036961

1 Installation examples

1 Overfill prevention or upper level detection (maximum safety)
2 Dry running protection for pump (minimum safety)
3 Lower level detection (minimum safety)

Input

Measured variable

The change in medium capacitance is detected by the electrode in contact with the process. Detection occurs based on the medium covering the electrode.

Measuring range

- Standard: Water- or alcohol-based media, $\varepsilon_r \geq 10$
- Extended: Oil-based media $2.4 < \varepsilon_r < 10$ or media that form heavy buildup
- Device with IO-Link communication: Adjustment up to $\varepsilon_r > 2.4$ via the IO-Link interface for water-, alcohol- and oil-based liquids or powdered products

Output

Switch output

- 2 DC-PNP outputs, freely configurable
- 1 switch output active: 200 mA connectable load (short-circuit proof)
  ℹ Unlike the IO-Link standard, the SIO mode supports 200 mA
- Both switch outputs active: Connectable load of 105 mA each (short-circuit proof)
- Safety-related switching
  The electrical switch opens if the point level is reached or if faults or a power outage occur.
  – Maximum point level detection (MAX): e. g. for overfill protection
  – Minimum point level detection (MIN): e. g. to protect pumps from dry running
- Residual voltage: < 3 V
- Residual current: < 100 µA

Power supply

Supply voltage

SIO mode
10 to 30 VDC

IO-Link mode
18 to 30 VDC

IO-Link communication is guaranteed only if the supply voltage is at least 18 V.

Power consumption

< 1 W (at max. load: 200 mA)

Electrical connection

Connecting the device

WARNING

Risk of injury from the uncontrolled activation of processes!
- Switch off the supply voltage before connecting the device.
- Make sure that downstream processes are not started unintentionally.

WARNING

Electrical safety is compromised by an incorrect connection!
- In accordance with IEC/EN61010 a separate circuit breaker must be provided for the device.
- Voltage source: Non-hazardous contact voltage or Class 2 circuit (North America).
- The device must be operated with a fine-wire fuse 500 mA (slow-blow).
- Protective circuits against reverse polarity are integrated.

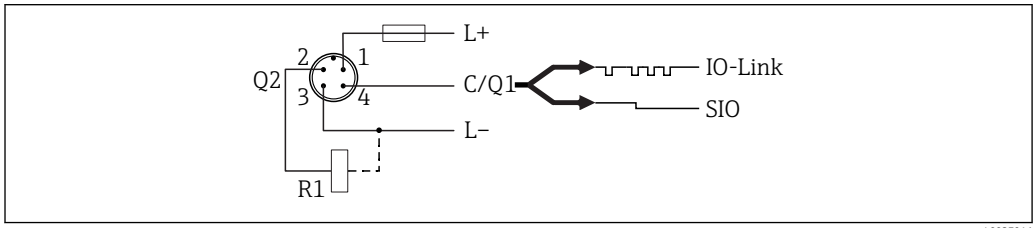

A0037916

Pin 1 Supply voltage +
Pin 2 2nd switch output
Pin 3 Supply voltage -
Pin 4 IO-Link communication or 1st switch output (SIO mode)

SIO mode (without IO-Link communication)

Minimum safety		
Terminal assignment	**MIN output**	**LED yellow (ye) 1**
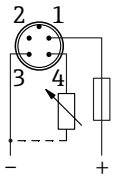		
		
		

Maximum safety		
Terminal assignment	**MAX output**	**LED yellow (ye) 2**
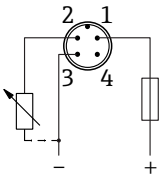	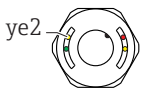	
		
		

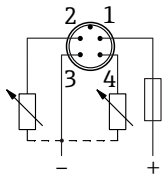

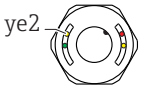

Function monitoring

When both outputs are connected, the MIN and MAX outputs assume opposite states (XOR) when the device is operating fault-free. In the event of an alarm condition or a cable break, both outputs are de-energized. This means that function monitoring is possible in addition to level monitoring. The behavior of the switch outputs can be configured via IO-Link.

Connection for function monitoring using XOR operation					
Terminal assignment	**MAX output**	**LED yellow (ye) 2**	**MIN output**	**LED yellow (ye) 1**	**LED red (rd)**
		☼		☼	●
		●		●	●
		●		●	☼

Device plugs M12 plug: IEC 60947-5-2

Length of connecting cable
- Max. 25 Ω/core, total capacity < 100 nF
- IO-Link communication: < 10 nF

Overvoltage protection Overvoltage category II

Reverse polarity protection

Integrated; no damage in the event of reverse polarity or short-circuit.

Short-circuit protection

Overload protection/short-circuit protection at I > 200 mA; the sensor is not destroyed.

If both switch outputs are active: per switch output 105 mA.

Intelligent monitoring:

Testing for overload at intervals of approx. 1.5 s; normal operation resumes once the overload/short-circuit has been rectified.

Performance characteristics

Reference operating conditions

The following reference conditions apply to the performance characteristics:
- Ambient temperature: 20 °C (68 °F) ±5 °C (9 °F)
- Medium: Water, conductivity approx. 200 µS/cm

Maximum uncertainty ±1 mm (0.04 in) in accordance with DIN 61298-2

Hysteresis Maximum 1 mm (0.04 in)

Non-repeatability ±0.5 mm (0.02 in) in accordance with DIN 61298-2

Switching delay

Switching delay time/switchback delay time of outputs
- 0.5 s when the sensor is covered (can be configured via IO-Link 0.3 to 60 s)
- 1 s when the sensor is free (can be configured via IO-Link 0.3 to 60 s)

Optional: 0.3 s; 1.5 s or 5 s when the sensor is covered and free, see product structure, order code for "Service", option HS "Switching delay"

Switch-on time

< 2 s (no defined switching status before this)

Installation conditions

Mounting location

Installation is possible in any position in a vessel, pipe or tank.

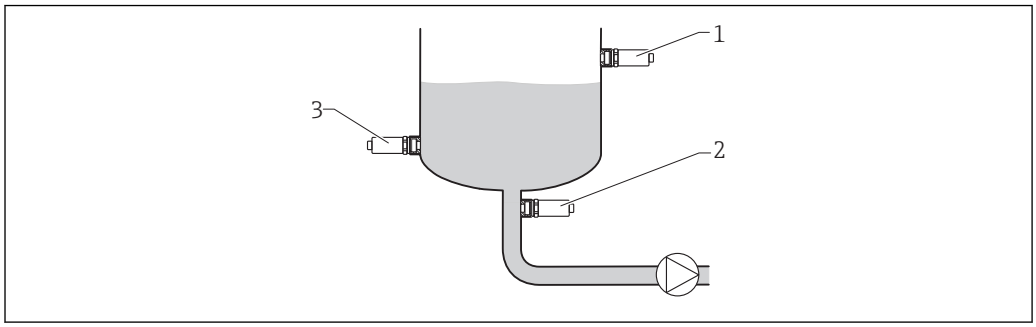

A0036961

2 Installation examples

1 Overfill prevention or upper level detection (maximum safety)
2 Dry running protection for pump (minimum safety)
3 Lower level detection (minimum safety)

Installation in pipes

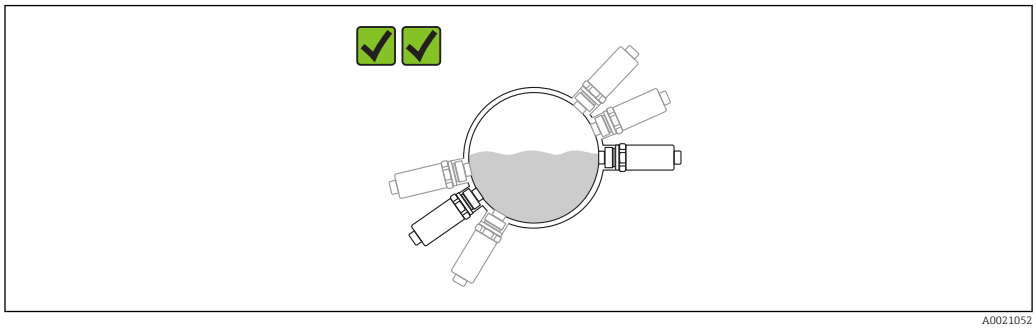

A0021052

3 Mounting position in horizontal pipes

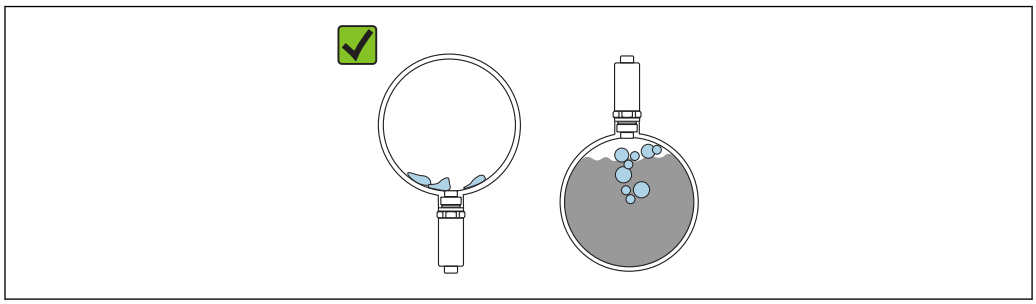

A0038773

4 The measurement can be impaired if the sensor is partially covered or if air bubbles occur at the sensor.

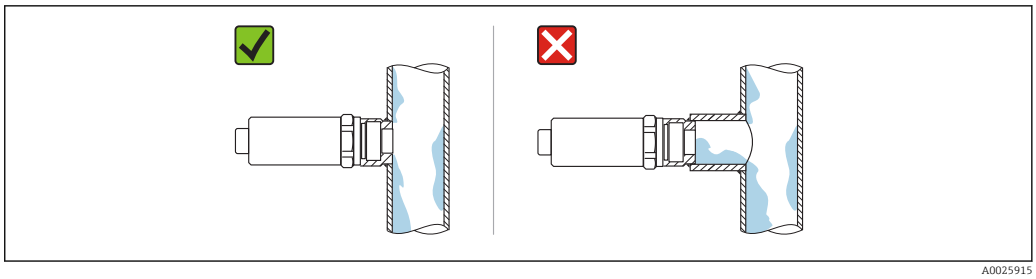

5 *Flush-mounted installation*

Special mounting instructions

- Protect housing against impact.
- Moisture must not penetrate the housing when mounting the device, establishing the electrical connection and during operation.
- In the IP69 version, only remove the protection cap from the M12 plug shortly before establishing the electrical connection.

Environment

Ambient temperature range

At the housing: −40 to +70 °C (−40 to +158 °F)

Storage temperature

−40 to +85 °C (−40 to +185 °F)

Operating altitude

Up to 2 000 m (6 600 ft) above sea level

Climate class

DIN EN 60068-2-38/IEC 68-2-38: Test Z/AD

Degree of protection

- IP65/67 NEMA type 4X enclosure (plastic housing cover)
- IP66/68/69 NEMA type 4X/6P enclosure (metal housing cover)

Vibration resistance

As per test Fh, EN 60068-2-64:2008: a(RMS) = 50 m/s², f = 5 to 2 000 Hz, t = 3 axes × 2 h

Shock resistance

As per test Ea, prEN 60068-2-27:2007: a = 300 m/s² = 30 g, 3 axes × 2 directions × 3 shocks × 18 ms

Cleaning

Resistant to typical cleaning agents from the outside, in accordance with Ecolab test.

Electromagnetic compatibility

Electromagnetic compatibility in accordance with all the relevant requirements of the EN 61326 series. For details, refer to the Declaration of Conformity.

Only the requirements of IEC/EN 61131-9 are met if IO-Link communication is used.

If the device is installed in plastic structures, its function may be influenced by strong electromagnetic fields. Emission requirements for class A equipment are met (only for use in "industrial environments").

Process

Process temperature range

−20 to +100 °C (−4 to +212 °F)

- For 1 h: +150 °C (+302 °F)
- M24 process adapter with EPDM process seal for 1 h: +130 °C (+266 °F)

Process pressure range

−1 to +25 bar (−14.5 to +362.5 psi)

Process fluid

For reliable point level detection, the device can be adapted to the process conditions in question.

The following settings can be made via IO-Link: **Parameter** → **Application** → **Active switchpoints**

- **Standard** preconfigured for:
  Water- or alcohol-based media ($\varepsilon_r \geq 10$)
  For example, water, milk and various dairy products, soft drinks, beer
- **Extended** preconfigured for:
  Oil-based media ($\varepsilon_r > 2.4$)
  For example: Oils, ketchup, mustard, mayonnaise, honey, nougat spread
- **User**; can be freely configured to customer medium:
  - **Switch point value Output 1/2**
  - **Switchback point value Output 1/2**
  - **ε_r**

For dielectric constants (DC values) of many media commonly used in various industries refer to:
- the Endress+Hauser DC manual (CP01076F)
- the Endress+Hauser "DC Values App" (available for Android and iOS)

Adhesive and viscous media

Setting	Light buildup	Heavy buildup	Surface drying
	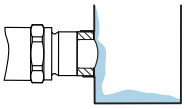	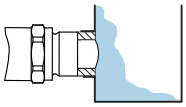	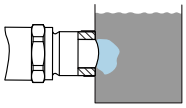
Standard	✓ ✓	✗	✓ ✓
Extended	✓ 1)	✓	✓ 1)

1) Surface drying or insulating, non-homogeneous layers can cause the sensor to signal "free" and should therefore be avoided or eliminated, particularly in maximum safety mode (overflow). The Standard setting is preferable in this type of application.

Media with foam formation

Setting		
	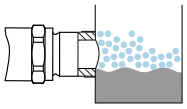	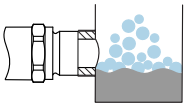
Standard	Sensor signal "covered"	Sensor signal "free" 1)
Extended	Sensor signal "free"	Sensor signal "free"

1) Very coarsely-pored foam cannot be detected by the sensor.

The device is delivered with the "Standard" setting. Optionally, it can be ordered with "Extended" as the default setting.

Mechanical construction

Design

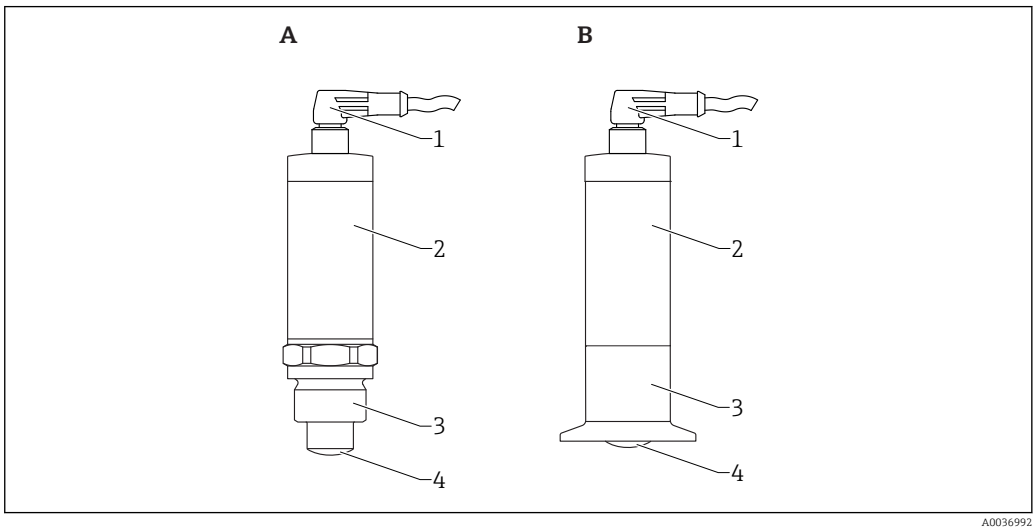

6

A Device with thread process connection
B Device with clamp/DIN11851 process connection
1 M12 plug
2 Housing
3 Process connection
4 Sensor

For the dimensions, see the Product Configurator: www.endress.com

Search for product → click "Configuration" to the right of the product image → after configuration click "CAD"

The following dimensions are rounded values. For this reason, they may deviate slightly from the dimensions given on www.endress.com.

Weight

Approx.300 g (10.58 oz)

Materials

Sensor:
316L (1.4404), PEEK
(The material PEEK meets the requirements of EU 1935/2004, 10/2011, 2023/2006 and FDA 21 CFR 177.1380)

Process connection:
316L (1.4404/1.4435)

M12 plug:
Housing cover (depending on the design):
- PPSU
- 316L (1.4404/1.4435)

Design ring:
PBT/PC

Cable:
PPSU

Housing:
316L (1.4404/1.4435)

Nameplate:
Lasered onto housing

Surface roughness

Wetted sensor surface: $R_a \leq 0.76$ µm (30 µin)

Operation options

Local operation

Operational display (LEDs)

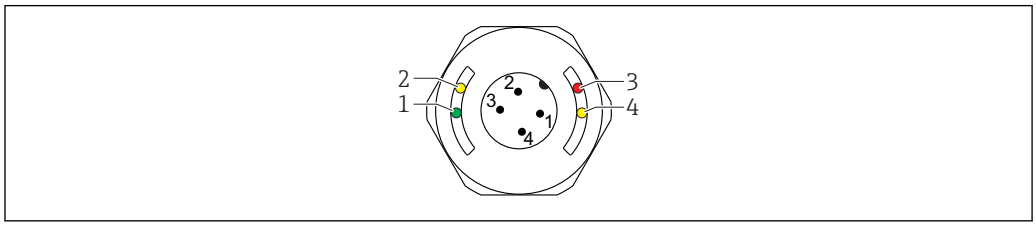

A0038425

7 LEDs in the housing cover

1 Status/Communication
2 Switch status/switch output 2
3 Warning/Maintenance required
4 Switch status/switch output 1

There is no external signaling via LEDs on the metal housing cover (IP69). A connecting cable with an M12 plug and LED indicator can be ordered as an accessory if necessary. See "Accessories".

Operation via test magnet

The test magnet is included in the scope of delivery.

A switch output function test can be carried out directly at the machine by means of a test magnet.

Operation via IO-Link operating menu

IO-Link information

IO-Link is a point-to-point connection for communication between the device and an IO-Link master. This requires an IO-Link compatible module (IO-Link master) for operation. The IO-Link communication interface enables direct access to the process and diagnostic data. It also provides the option of configuring the device while in operation.

Physical layer, the devices supports the following features:
- IO-Link specification: version 1.1
- IO-Link Smart Sensor Profile 2nd Edition
- SIO mode: Yes
- Speed: COM2; 38.4 kBaud
- Minimum cycle time: TBD
- Process data width: 16 bit
- IO-Link data storage: Yes
- Block configuration: Yes
- Device operational: The device is operational 4 s after the supply voltage has been applied

IO-Link download

http://www.endress.com/download
- Select "Software" as the media type.
- Select "Device Driver" as the software type.
  Select IO-Link (IODD).
- In the "Text Search" field enter the device name.

Certificates and approvals

Currently available certificates and approvals can be called up via the product configurator.

CE mark

The measuring system meets the legal requirements of the applicable EC guidelines. These are listed in the corresponding EC Declaration of Conformity together with the standards applied.

Endress+Hauser confirms successful testing of the device by affixing to it the CE mark.

RCM-Tick marking

The supplied product or measuring system meets the ACMA (Australian Communications and Media Authority) requirements for network integrity, interoperability, performance characteristics as well as health and safety regulations. Here, especially the regulatory arrangements for electromagnetic compatibility are met. The products are labelled with the RCM- Tick marking on the name plate.

A0029561

RoHS

The measuring system complies with the substance restrictions of the Restriction on Hazardous Substances Directive 2011/65/EU (RoHS 2).

EAC conformity

The measuring system meets the legal requirements of the applicable EAC guidelines. These are listed in the corresponding EAC Declaration of Conformity together with the standards applied.

Endress+Hauser confirms successful testing of the device by affixing to it the EAC mark.

Pressure equipment with allowable pressure ≤ 200 bar (2 900 psi)

Pressure instruments with a flange and threaded boss that do not have a pressurized housing do not fall within the scope of the Pressure Equipment Directive, irrespective of the maximum allowable pressure.

Reasons:

According to Article 2, point 5 of EU Directive 2014/68/EU, pressure accessories are defined as "devices with an operational function and having pressure-bearing housings".

If a pressure instrument does not have a pressure-bearing housing (no identifiable pressure chamber of its own), there is no pressure accessory present within the meaning of the Directive.

Approval

CSA C/US General Purpose

Sanitary compatibility

The device has been developed for use in hygienic processes. The materials in contact with the process meet FDA requirements as well as the 3-A Sanitary Standard No. 74-xx. Endress+Hauser confirms this by affixing the 3-A symbol to the device.

The following certificate copies can be ordered with the device (optional):

3-A

74-xx

EHEDG

TYPE EL - CLASS I

- If cleaning in place (CIP) is required, weld-in adapters that comply with 3-A requirements are offered. If installed horizontally, ensure that the leakage hole is pointing down. This allows leaks to be detected as quickly as possible.
- To avoid the risk of contamination, install the device in accordance with the design principles of EHEDG, Document 37 "Hygienic Design and Application for Sensors" and Document 16 "Hygienic Pipe Connections".
- Suitable connections and seals must be used in order to guarantee hygiene-compliant design as per 3-A and EHEDG specifications.
- Information on 3-A and EHEDG-approved weld-in adapters can be found in the "Weld-in adapter and flanges" documentation, TI00426F.
- The gap-free connections can be cleaned of all residue using sterilization in place (SIP) and cleaning in place (CIP), which are typical cleaning methods within the industry. Attention must be paid to the pressure and temperature specifications of the sensor and process connections for CIP and SIP processes.

Hygiene approval

Information on 3-A and EHEDG-approved weld-in adapters can be found in the "Weld-in adapter and flanges" documentation, TI00426F.

The process connections can be selected in the Product Configurator.

Inspection certificates

The following documents can be ordered with the device (optional):

- Acceptance test certificate as per EN 10204-3.1
- Test report of surface roughness ISO4287/Ra
- Final inspection report

Ordering information

Detailed ordering information is available from the following sources:
- In the Product Configurator on the Endress+Hauser website: www.endress.com -> Click "Corporate" -> Select your country -> Click "Products" -> Select the product using the filters and search field -> Open product page -> The "Configure" button to the right of the product image opens the Product Configurator.
- From your Endress+Hauser Sales Center: www.addresses.endress.com

Product Configurator - the tool for individual product configuration
- Up-to-the-minute configuration data
- Depending on the device: Direct input of measuring point-specific information such as measuring range or operating language
- Automatic verification of exclusion criteria
- Automatic creation of the order code and its breakdown in PDF or Excel output format
- Ability to order directly in the Endress+Hauser Online Shop

Accessories

Accessories can be ordered with the device (optional) or separately.

Device-specific accessories

Test magnet

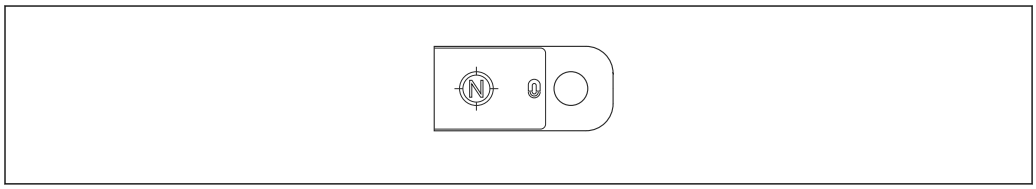

A0021732

8 Test magnet

Order number: 71267011

Hexagon tubular socket wrench 32 mm

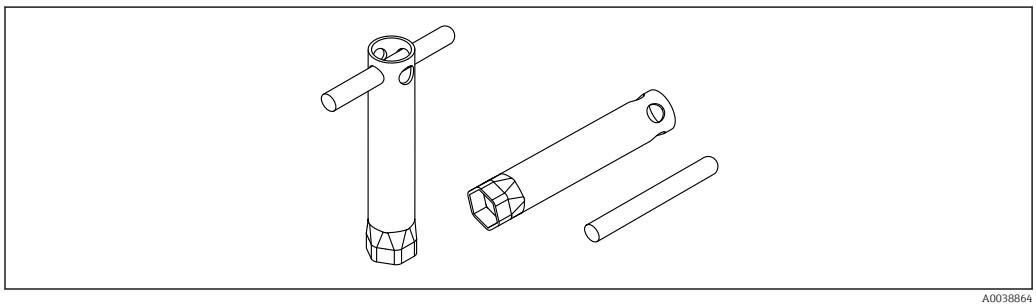

A0038864

9 Hexagon tubular socket wrench

Order number: 52010156

To mount the device in locations that are difficult to access.

Plug-in jack

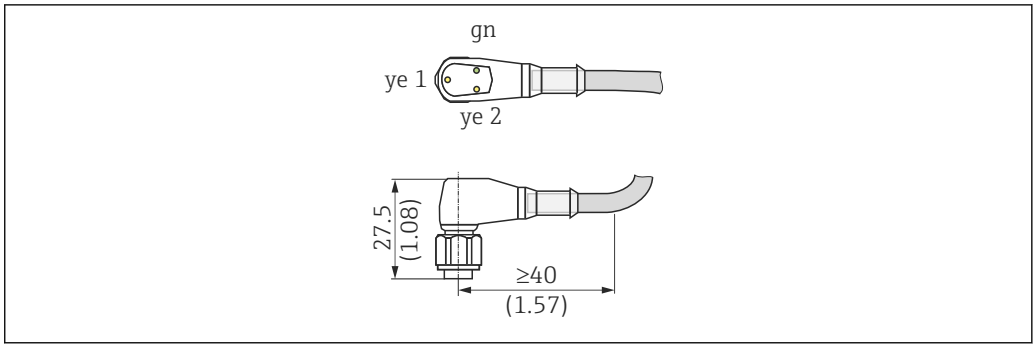

10 Dimensions of plug-in jack, engineering unit: mm (in)

Example: M12 with LED

Plug-in jack M12 IP69 with LED
- Elbowed 90°, terminated at one end
- 5 m (16 ft) PVC cable (orange)
- Body: PVC (transparent)
- Slotted nut 316L
- 52018763

Plug-in jack M12 IP69 without LED
- Elbowed 90°, terminated at one end
- 5 m (16 ft) PVC cable (orange)
- Body: PVC (orange)
- Slotted nut 316L (1.4435)
- 52024216

Plug-in jack M12 IP67 without LED
- Elbowed 90°
- 5 m (16 ft) PVC cable (gray)
- Slotted nut Cu Sn/Ni
- Body: PUR (blue)
- 52010285

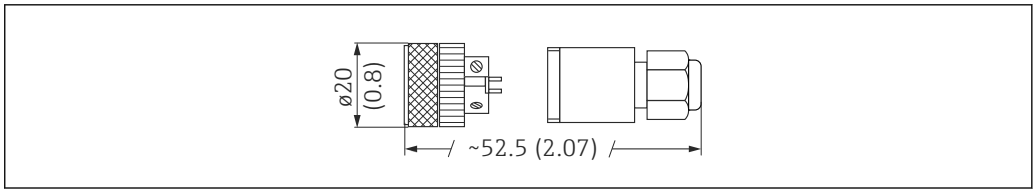

11 Dimensions of self-terminated connection, engineering unit: mm (in)

Plug-in jack M12 IP67 without LED
- Straight, self-terminated connection to M12 plug
- Slotted nut Cu Sn/Ni
- Body: PBT
- 52006263

Core colors for M12 plug:
- 1 = BN (brown)
- 2 = WT (white)
- 3 = BU (blue)
- 4 = BK (black)

Process adapter M24 thread

Material
For all versions:
- Adapter
  316L (1.4435)
- Seal
  EPDM

Process adapter M24 PN25
Available versions:
- DIN11851 DN50 with slotted nut
- SMS 1 ½"

Process adapter M24 PN40
Available versions:
- Varivent F
- Varivent N

Weld-in adapter

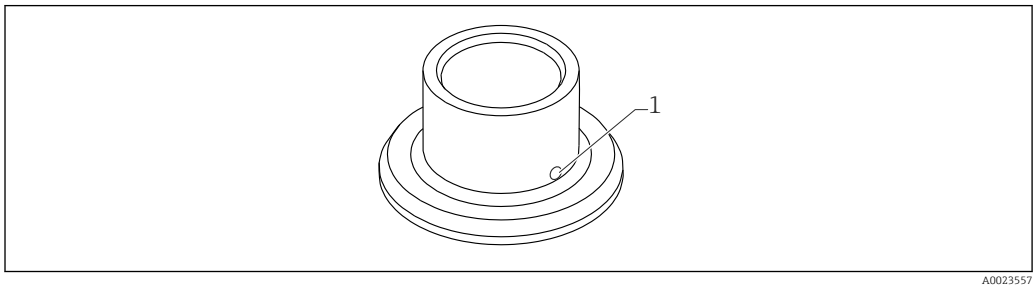

12 Sample drawing of weld-in adapter

1 Leakage hole

G ¾"
Available versions:
- ø 50 mm (1.97 in) - Installation on vessel
- ø 29 mm (1.14 in) - Installation in pipe

G 1"
Available versions:
- ø 53 mm (2.09 in) - Installation on vessel
- ø 60 mm (2.36 in) - Installation on pipe

M24
Available versions:
ø 65 mm (2.56 in) - Installation on vessel

Grooved union nut DIN11851

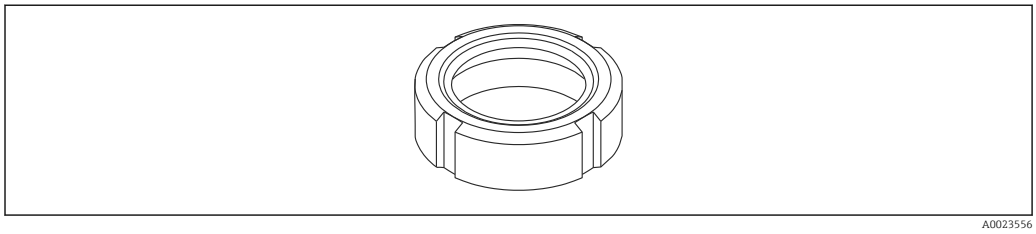

13 Sample drawing of grooved union nut

Material
For all versions:
304 (1.4307)

For milk pipe DIN11851
Available versions:
- DN25 - F26
- DN40 - F40
- DN50 - F50

Supplementary documentation

The following documentation types are available in the Downloads of the Endress+Hauser website (www.endress.com/downloads):

For an overview of the scope of the associated Technical Documentation, refer to the following:
- *W@M Device Viewer* (www.endress.com/deviceviewer): Enter the serial number from nameplate
- *Endress+Hauser Operations App*: Enter the serial number from the nameplate or scan the 2D matrix code (QR code) on the nameplate

Standard documentation	Operating Instructions **BA01902F**
Supplementary documentation	**TI00426F** Weld-in adapter, process adapter and flanges (overview)

Registered trademarks

IO-Link®
Is a registered trademark. It may only be used in conjunction with products and services by members of the IO-Link Community or by non-members who hold an appropriate license. For more detailed information on the use of IO-Link, please refer to the rules of the IO-Link Community at: www.io.link.com.

71423741

www.addresses.endress.com

Endress+Hauser

People for Process Automation