TI01403F/00/EN/08.26-00
71783263
2026-09-11

Technical Information
Liquiphant FTL51B

Vibronic

Level switch for liquids

Field of application

- Level switch for all liquids, for minimum or maximum detection in vessels, e.g. process tanks, storage tanks and piping, even in hazardous areas
- Process temperature range: −50 to +150 °C (−58 to +302 °F)
- Pressures up to 100 bar (1 450 psi)
- Viscosities up to 10 000 mPa·s
- Ideal substitute for float switches; reliable function is not affected by flow, turbulence, air bubbles, foam, vibration, solids content or buildup

Benefits

- Approved for safety systems with functional safety requirements up to SIL2/SIL3 in accordance with IEC 61508
- Functional safety: monitoring of the vibration frequency of the tuning fork
- Heartbeat Technology via the free iOS/Android SmartBlue app
- With *Bluetooth*® wireless technology

Endress+Hauser
People for Process Automation

Table of contents

About this document . . . 4
Safety symbols . . . 4
Electrical symbols . . . 4
Symbols for certain types of Information . . . 4
Symbols in graphics . . . 4
Communication-specific symbols . . . 4
Graphic conventions . . . 4

Function and system design . . . 5
Measuring principle . . . 5
Measuring system . . . 5
Reliability . . . 5

Input . . . 5
Measured variable . . . 5
Measuring range . . . 5

Output . . . 6
Output and input variants . . . 6
Output signal . . . 6
Ex connection data . . . 6

2-wire AC (electronic insert FEL61) . . . 7
Supply voltage . . . 7
Power consumption . . . 7
Current consumption . . . 7
Load . . . 7
Behavior of output signal . . . 7
Terminals . . . 7
Overvoltage protection . . . 7
Terminal assignment . . . 7
Behavior of switch output and signaling . . . 8

3-wire DC PNP (electronic insert FEL62) . . . 9
Supply voltage . . . 9
Power consumption . . . 9
Current consumption . . . 9
Load current . . . 9
Capacitance load . . . 9
Residual current . . . 9
Residual voltage . . . 9
Behavior of output signal . . . 9
Terminals . . . 9
Overvoltage protection . . . 9
Terminal assignment . . . 10
Behavior of switch output and signaling . . . 10

Universal current connection with relay output (electronic insert FEL64) . . . 10
Supply voltage . . . 11
Power consumption . . . 11
Connectable load . . . 11
Behavior of output signal . . . 11
Terminals . . . 11
Overvoltage protection . . . 11
Terminal assignment . . . 12
Behavior of switch output and signaling . . . 12

Relay output DC connection (electronic insert FEL64 DC) . . . 12
Supply voltage . . . 13
Power consumption . . . 13
Connectable load . . . 13
Behavior of output signal . . . 13
Terminals . . . 13
Overvoltage protection . . . 13
Terminal assignment . . . 13
Behavior of switch output and signaling . . . 14

PFM output (electronic insert FEL67) . . . 14
Supply voltage . . . 14
Power consumption . . . 14
Behavior of output signal . . . 14
Terminals . . . 14
Overvoltage protection . . . 14
Terminal assignment . . . 15
Connection cable . . . 15
Behavior of switch output and signaling . . . 16

2-wire NAMUR > 2.2 mA/< 1.0 mA (electronic insert FEL68) . . . 16
Supply voltage . . . 16
Power consumption . . . 16
Connection data interface . . . 16
Behavior of output signal . . . 16
Terminals . . . 17
Overvoltage protection . . . 17
Terminal assignment . . . 17
Behavior of switch output and signaling . . . 17
Electronic insert FEL68 with Bluetooth module . . . 17

LED module VU120 (optional) . . . 18
Supply voltage . . . 18
Power consumption . . . 18
Current consumption . . . 18
Signaling of operational status . . . 18

Bluetooth® module and Heartbeat Technology . . . 18
Bluetooth® module VU121 (optional) . . . 18

Performance characteristics . . . 20
Reference operating conditions . . . 20
Taking the switch point into consideration . . . 20
Maximum measurement error . . . 20
Hysteresis . . . 20
Non-repeatability . . . 20
Influence of the process temperature . . . 20
Influence of the process pressure . . . 20
Influence of the density of the process medium (at room temperature and normal pressure) . . . 21

Installation . . . 21
Mounting location, orientation . . . 21
Installation instructions . . . 22
Installing the device in piping . . . 24

Aligning the cable entry 24
Special installation instructions 25

Environment 26
Ambient temperature range 26
Storage temperature 27
Humidity 27
Operating altitude 27
Climate class 27
Degree of protection 27
Vibration resistance 28
Shock resistance 28
Mechanical load 28
Pollution degree 28
Electromagnetic compatibility (EMC) 28

Process 28
Process temperature range 28
Thermal shock 28
Process pressure range 28
Overpressure limit 29
Medium density 30
Viscosity 30
Pressure tightness 30
Solids contents 30

Mechanical construction 30
Design, dimensions 30
Dimensions 31
Weight 41
Materials 42
Surface roughness 44

Operability 44
Operation concept 44
Local operation 44
Local display 45
Remote operation 46

Certificates and approvals 47
CE mark 47
RCM marking 47
Ex approval 47
Corrosion test 47
General material compliance 47
Overfill protection system 47
Functional safety 47
Marine approvals 48
Radio approval 48
CRN approval 48
Pressure equipment with permitted pressure less than 200 bar, no pressure-bearing volume 48
Process seal as per ANSI/ISA 12.27.01 48
EAC conformity 48
ASME B 31.3/31.1 48

Ordering information 48
Service 49
Test reports, declarations and inspection certificates 49
Test, certificate, declaration 49
TAG 49

Application packages 50
Heartbeat Technology module 50
Heartbeat Verification 50
Proof testing for SIL/WHG devices 50

Accessories 51
Test magnet 51
Protective cover: 316L, XW112 51
Protective cover, plastic, XW111 51
M12 socket 52
Bluetooth® module VU121 (optional) 52
LED module VU120 (optional) 53
Sliding sleeves for unpressurized operation 53
High pressure sliding sleeves 54
Weld-in adapter 55

Documentation 55
Standard documentation 56
Supplementary device-dependent documentation 56

Registered trademarks 56

About this document

Safety symbols

DANGER
This symbol alerts you to a dangerous situation. Failure to avoid this situation will result in serious or fatal injury.

WARNING
This symbol alerts you to a potentially dangerous situation. Failure to avoid this situation can result in serious or fatal injury.

CAUTION
This symbol alerts you to a potentially dangerous situation. Failure to avoid this situation can result in minor or medium injury.

NOTICE
This symbol alerts you to a potentially harmful situation. Failure to avoid this situation can result in damage to the product or something in its vicinity.

Electrical symbols

Ground connection
Grounded clamp, which is grounded via a grounding system.

Protective earth (PE)
Ground terminals, which must be grounded prior to establishing any other connections. The ground terminals are located on the inside and outside of the device.

Symbols for certain types of Information

Permitted
Procedures, processes or actions that are permitted.

Forbidden
Procedures, processes or actions that are forbidden.

Tip
Indicates additional information

Reference to documentation

Reference to another section

1., 2., 3. Series of steps

Symbols in graphics

A, B, C ... View

1, 2, 3 ... Item numbers

Hazardous area

Safe area (non-hazardous area)

Communication-specific symbols

Bluetooth® wireless technology
Wireless data transmission between devices over a short distance via radio technology.

Graphic conventions

- Installation, explosion and electrical connection drawings are presented in simplified format
- Devices, assemblies, components and dimensional drawings are presented in reduced-line format
- Dimensional drawings are not to-scale representations; the dimensions indicated are rounded off to 2 decimal places
- Unless otherwise described, flanges are presented with sealing surface form EN 1091-1, B2; ASME B16.5, RF; JIS B2220, RF

Function and system design

Measuring principle

The sensor's vibrating fork vibrates at its natural frequency. As soon as the liquid covers the vibrating fork, the oscillation frequency decreases. The change in frequency causes the level switch to switch.

Point level measurement

Maximum or minimum detection for liquids in tanks or pipes in all industries. Suitable for leakage monitoring, pump dry-running protection or overfill prevention, for example.

Specific versions are suitable for use in hazardous areas.

The level switch differentiates between the "covered" and "not covered" conditions.

Depending on the MIN (minimum detection) or MAX (maximum detection) modes, there are two possibilities in each case: OK status and demand mode.

OK status
- In MIN mode, the vibrating fork is covered, e.g. pump dry-run protection
- In MAX mode, the vibrating fork is not covered, e.g. overfill protection

Demand mode
- In MIN mode, the vibrating fork is not covered, e.g. pump dry-run protection
- In MAX mode, the vibrating fork is covered, e.g. overfill protection system

Measuring system

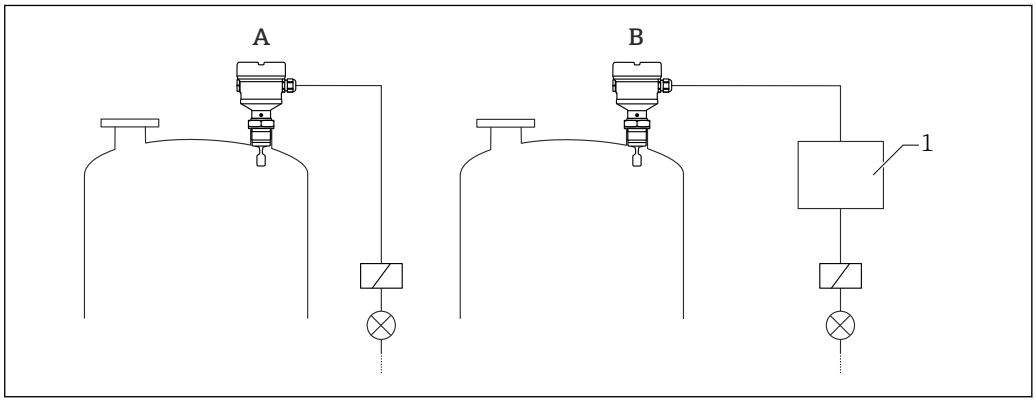

1 Example of a measuring system

A Device for direct connection of a load
B Device for connection to a separate switching unit or PLC
1 Switching unit, PLC etc.

Reliability

Device-specific IT security

The device settings and the diagnostic data can be read out via Bluetooth® wireless technology. Device settings cannot be changed via Bluetooth® wireless technology.

Input

Measured variable

The point level signal is triggered according to the operating mode (minimum or maximum detection) when the level exceeds or falls below the relevant point level.

Measuring range

Depends on the installation location and the pipe extension ordered
Maximum sensor length 6 m (20 ft)

Output

Output and input variants

Electronic inserts

2-wire AC (FEL61)
- Two-wire alternating current version
- Switches the load directly in the power supply circuit via an electronic switch

3-wire DC PNP (FEL62)
- Three-wire direct current version
- Switches the load via the transistor (PNP) and separate connection, e.g. in conjunction with programmable logical controllers (PLC)
- Ambient temperature −60 °C (−76 °F), optionally available to order
  Low-temperature electronic inserts are marked LT

Universal current connection, relay output (FEL64)
- Switches the loads via two potential-free change-over contacts
- Ambient temperature −60 °C (−76 °F), optionally available to order
  Low-temperature electronic inserts are marked LT

Direct current connection, relay output (FEL64DC)
- Switches the load via two potential-free change-over contacts
- Ambient temperature −60 °C (−76 °F), optionally available to order
  Low-temperature electronic inserts are marked LT

PFM output (FEL67)
- For separate switching unit (Nivotester FTL325P, FTL375P)
- PFM signal transmission; current pulses are superimposed on the power supply along the two-wire cabling
- Ambient temperature −50 °C (−58 °F), optionally available to order
  The low-temperature electronic inserts are marked LT

2-wire NAMUR > 2.2 mA/< 1.0 mA (FEL68)
- For separate switching unit, e.g. Nivotester FTL325N
- Signal transmission H-L edge 2.2 to 3.8/0.4 to 1.0 mA as per IEC 60917-5-6 (NAMUR) on two-wire cable
- Ambient temperature −50 °C (−58 °F), optionally available to order
  Low-temperature electronic inserts are marked LT

Output signal

Switching output

Preset switching delay times can be ordered:
- 0.5 s when the vibrating fork is covered and 1.0 s when it is uncovered (factory setting)
- 0.25 s when the vibrating fork is covered and 0.25 s when it is uncovered
- 1.5 s when the vibrating fork is covered and 1.5 s when it is uncovered
- 5.0 s when the vibrating fork is covered and 5.0 s when it is uncovered

COM interface

For connecting to modules VU120 or VU121 (no modifying effect)

Bluetooth® wireless technology (optional)

The device has a Bluetooth® interface. Device data and diagnostic data can be read out using the free SmartBlue app.

Ex connection data

See safety instructions (XA): All data relating to explosion protection are provided in separate Ex documentation and are available from the Downloads area of the Endress+Hauser website. The Ex documentation is supplied as standard with all devices approved for use in explosion hazardous areas.

2-wire AC (electronic insert FEL61)

- Two-wire alternating current version
- Switches the load directly in the power supply circuit via an electronic switch; always connect in series with a load.
- Functional testing without level change
  A functional test can be performed on the device using the test button on the electronic insert.

Supply voltage

U = AC 19 to 253 V, 50 Hz/60 Hz

Residual voltage when switched through: typically 12 V

In accordance with IEC 61010-1: Provide a suitable circuit breaker for the device and limit the current to 1 A, e.g. by installing a 1 A fuse (slow-blow) in the phase (not the neutral conductor) of the supply circuit.

Power consumption

S ≤ 2 VA

Current consumption

Residual current when blocked: I ≤ 3.8 mA

The red LED flashes in the event of an overload or short-circuit. Check for an overload or short-circuit every 5 s. The test is deactivated after 60 s.

Load

- Load with a minimum holding power/rated power of 2.5 VA at 253 V (10 mA) or 0.5 VA at 24 V (20 mA)
- Load with a maximum holding power/rated power of 89 VA at 253 V (350 mA) or 8.4 VA at 24 V (350 mA)
- With overload and short-circuit protection

Behavior of output signal

- OK status: Load on (switched through)
- Demand mode: Load off (blocked)
- Alarm: Load off (blocked)

Terminals

Terminals for cable cross-section up to 2.5 mm^2 (14 AWG). Use ferrules for the wires.

Overvoltage protection

Overvoltage category II

Terminal assignment

Always connect an external load. The electronic insert has integrated short-circuit protection.

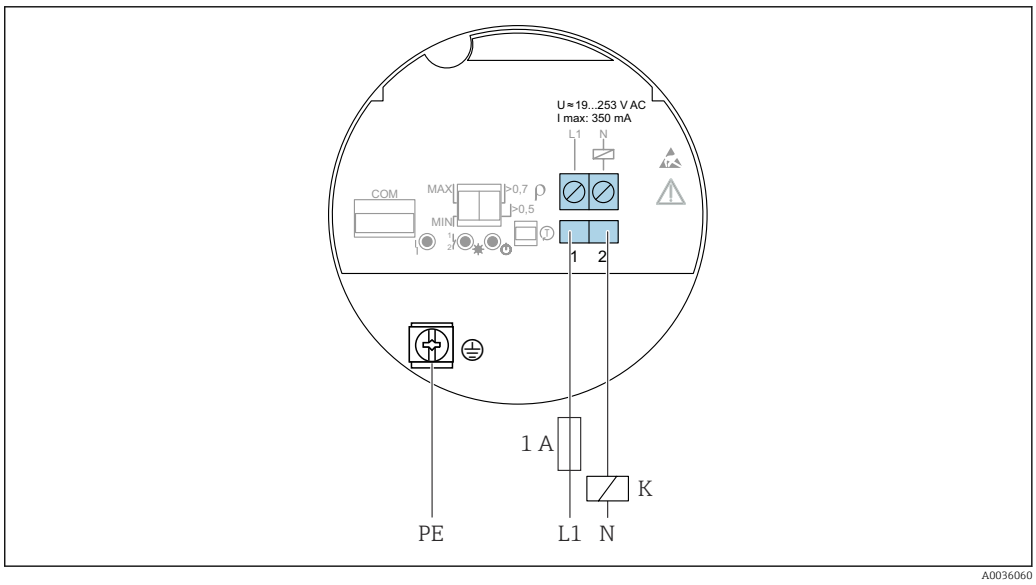

2 *2-wire AC, electronic insert FEL61*

Behavior of switch output and signaling

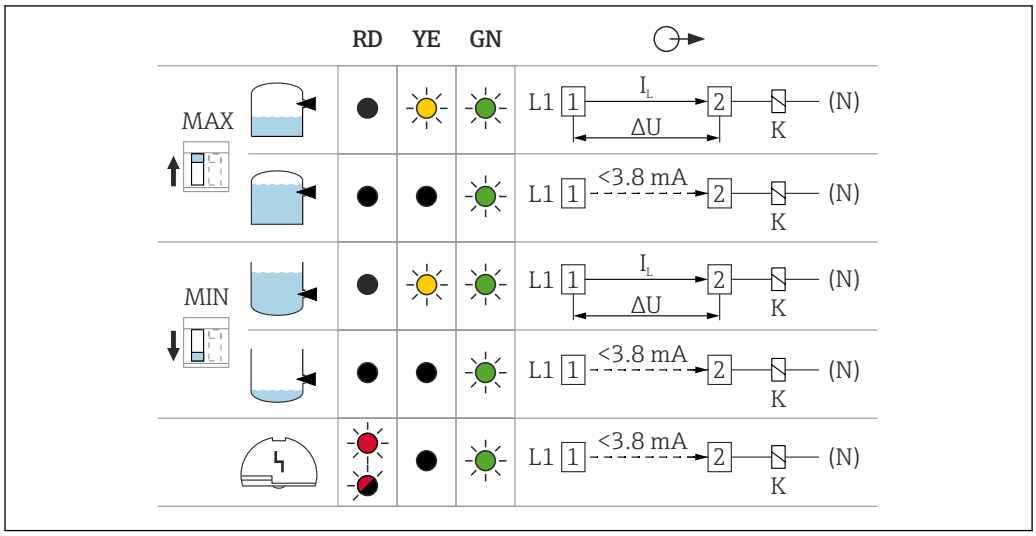

3 *Behavior of switch output and signaling, electronic insert FEL61*

MAX DIP switch for setting MAX safety mode
MIN DIP switch for setting MIN safety mode
RD LED red for warning or alarm
YE LED yellow, switch status
GN LED green, operational status, device on
I_L Load current switched through

Selection tool for relays

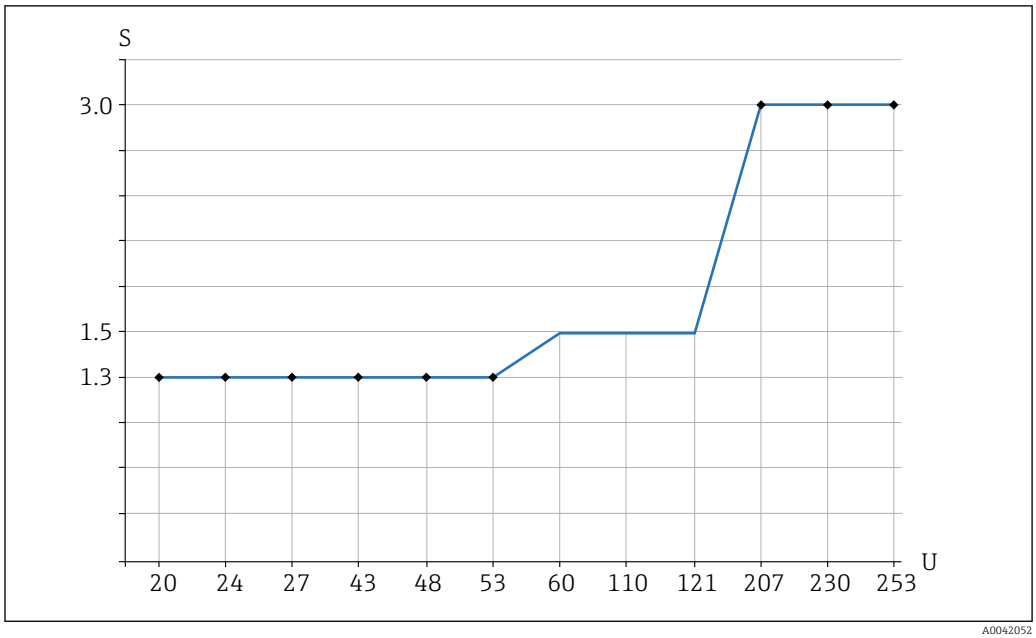

4 *Recommended minimum holding power/rated power for load*

S Holding power/rated power in [VA]
U Operating voltage in [V]

AC mode

- Operating voltage: 24 V, 50 Hz/60 Hz
- Holding power/rated power: > 0.5 VA, < 8.4 VA

- Operating voltage: 110 V, 50 Hz/60 Hz
- Holding power/rated power: > 1.1 VA, < 38.5 VA

- Operating voltage: 230 V, 50 Hz/60 Hz
- Holding power/rated power: > 2.3 VA, < 80.5 VA

3-wire DC PNP (electronic insert FEL62)

- Three-wire direct current version
- Preferably in conjunction with programmable logic controllers (PLC), DI modules as per EN 61131-2. Positive signal at switching output of electronics module (PNP)
- Functional testing without level change
  A functional test can be performed on the device using the test button on the electronic insert or using the test magnet (can be ordered as an option) with the housing closed.

Supply voltage

WARNING

Failure to use the prescribed power supply unit.
Risk of potentially life-threatening electric shock!
- ▶ The FEL62 may only be powered by devices with reliable galvanic isolation in accordance with IEC 61010-1.

U = 10 to 55 V_{DC}

The device must be powered by a voltage supply categorized as "CLASS 2" or "SELV".

Comply with the following according to IEC 61010-1: Provide a suitable circuit breaker for the device and limit the current to 500 mA, e.g. by installing a 0.5 A fuse (slow-blow) in the power supply circuit.

Power consumption

P ≤ 0.5 W

Current consumption

I ≤ 10 mA (without load)

The red LED flashes in the event of an overload or short-circuit. Check for an overload or short-circuit every 5 s.

Load current

I ≤ 350 mA with overload and short-circuit protection

Capacitance load

C ≤ 0.5 µF at 55 V, C ≤ 1.0 µF at 24 V

Residual current

I < 100 µA (for blocked transistor)

Residual voltage

U < 3 V (for switched through transistor)

Behavior of output signal

- OK status: Switched through
- Demand mode: Blocked
- Alarm: Blocked

Terminals

Terminals for cable cross-section up to 2.5 mm^2 (14 AWG). Use ferrules for the wires.

Overvoltage protection

Overvoltage category I

Terminal assignment

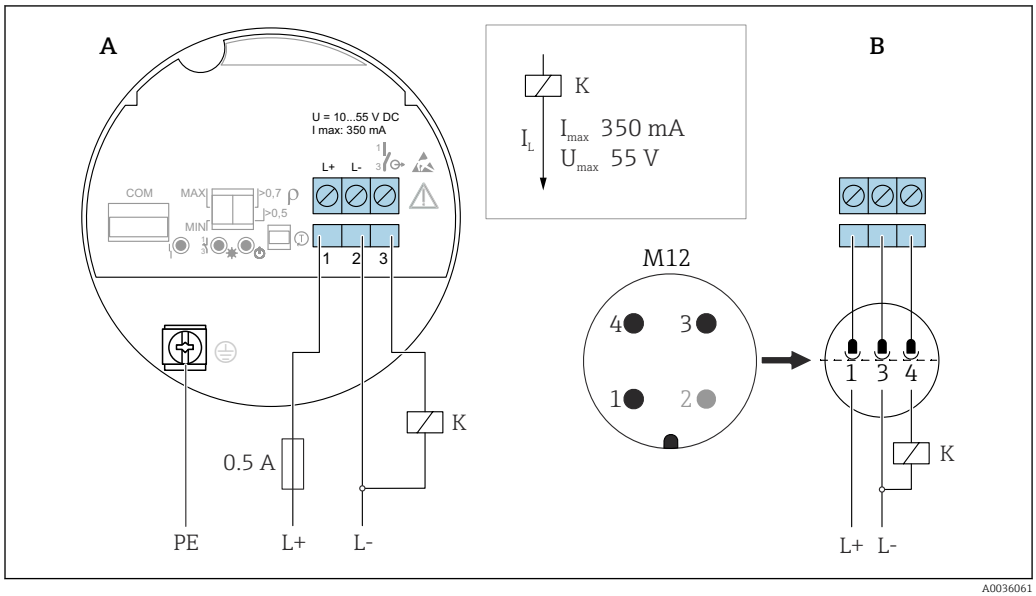

5 3-wire DC-PNP, electronic insert FEL62

A Connection wiring with terminals
B Connection wiring with M12 plug in housing according to EN61131-2 standard

Behavior of switch output and signaling

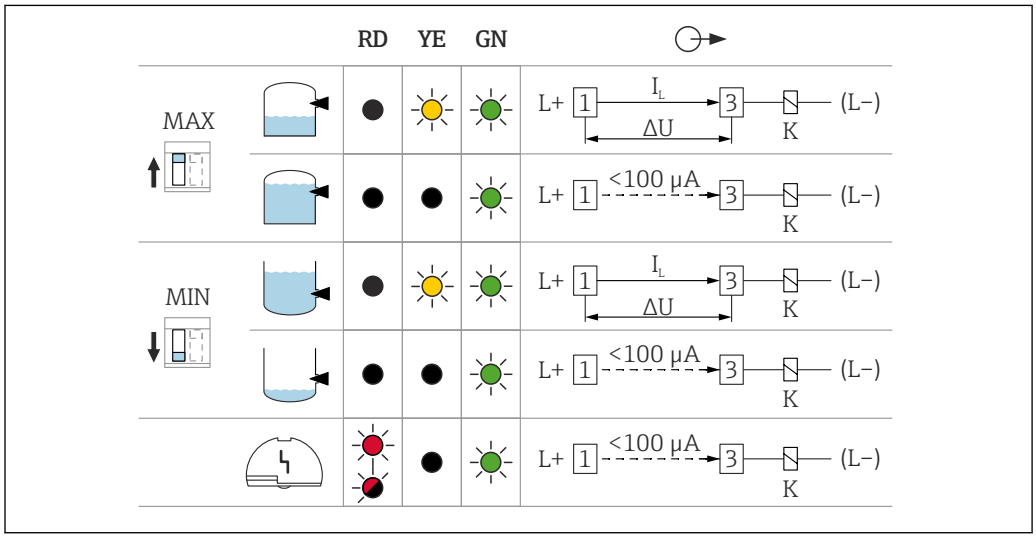

6 Behavior of switch output and signaling, electronic insert FEL62

MAX DIP switch for setting MAX safety mode
MIN DIP switch for setting MIN safety mode
RD LED red for warning or alarm
YE LED yellow, switch status
GN LED green, operational status, device on
I_L Load current switched through

Universal current connection with relay output (electronic insert FEL64)

- Switches the loads via two potential-free change-over contacts
- Two galvanically isolated change-over contacts (DPDT), both change-over contacts switch simultaneously
- Functional testing without level change. A functional test can be performed on the device using the test button on the electronic insert or using the test magnet (can be ordered as an option) with the housing closed.

WARNING

An error at the electronic insert can cause the permitted temperature for touch-safe surfaces to be exceeded. This presents a risk of burns.

- Do not touch the electronics in the event of an error!

Supply voltage

U = 19 to 253 V_{AC}, 50 Hz/60 Hz / 19 to 55 V_{DC}

Comply with the following according to IEC 61010-1: Provide a suitable circuit breaker for the device and limit the current to 500 mA, e.g. by installing a 0.5 A fuse (slow-blow) in the power supply circuit.

Power consumption

S < 25 VA, P < 1.3 W

Connectable load

Loads switched via two potential-free change-over contacts (DPDT)

- I_{AC} ≤ 6 A, U~ ≤ AC 253 V; P~ ≤ 1 500 VA, cos φ = 1, P~ ≤ 750 VA, cos φ > 0.7
- I_{DC} ≤ 6 A to DC 30 V, I DC ≤ 0.2 A to 125 V

Additional restrictions for the connectable load depend on the selected approval. Pay attention to the information in the Safety Instructions (XA).

According to IEC 61010, the following applies: Total voltage from relay outputs and auxiliary power supply ≤ 300 V.

Use electronic insert FEL62 DC PNP for small DC load currents, e.g. for connection to a PLC.

Relay contact material: Silver/nickel AgNi 90/10

When connecting a device with high inductance, provide a spark quenching unit to protect the relay contact. A fine-wire fuse (depending on the connected load) protects the relay contact in the event of a short-circuit.

Both relay contacts switch simultaneously.

Behavior of output signal

- OK status: Relay energized
- Demand mode: Relay de-energized
- Alarm: Relay de-energized

Terminals

Terminals for cable cross-section up to 2.5 mm^2 (14 AWG). Use ferrules for the wires.

Overvoltage protection

Overvoltage category II

Terminal assignment

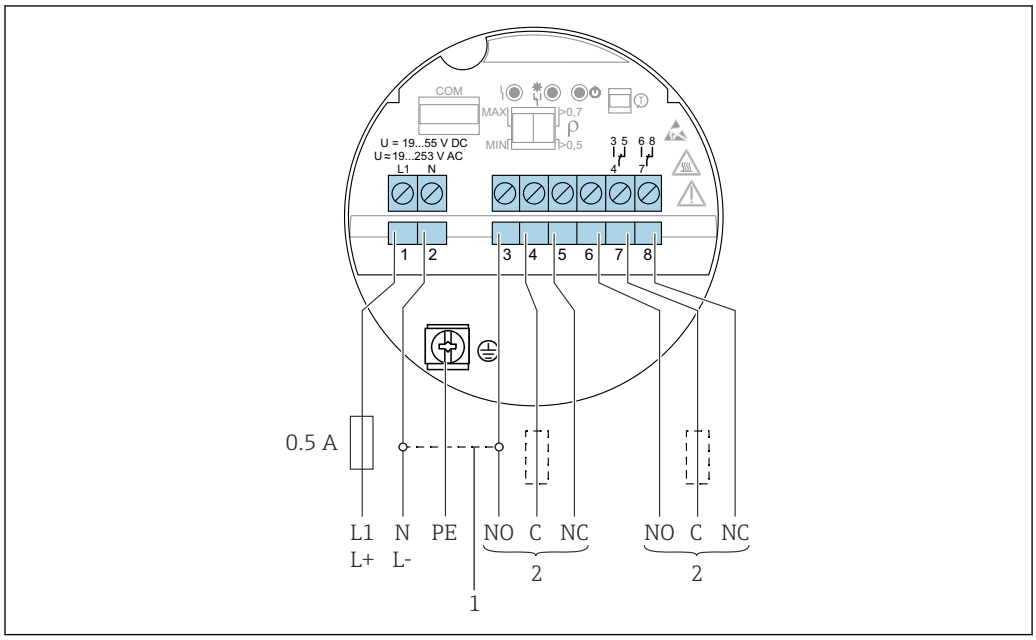

7 Universal current connection with relay output, electronic insert FEL64

1 When bridged, the relay output works with NPN logic
2 Connectable load

Behavior of switch output and signaling

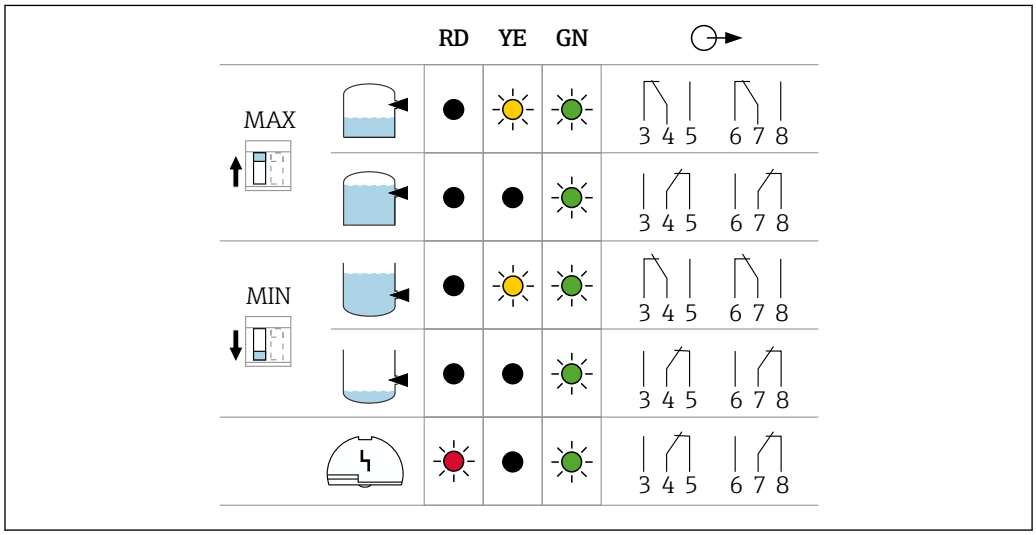

8 Behavior of switch output and signaling, electronic insert FEL64

MAX DIP switch for setting MAX safety mode
MIN DIP switch for setting MIN safety mode
RD LED red for alarm
YE LED yellow, switch status
GN LED green, operational status, device on

Relay output DC connection (electronic insert FEL64 DC)

- Switches the loads via two potential-free change-over contacts
- Two galvanically isolated change-over contacts (DPDT), both change-over contacts switch simultaneously
- Functional testing without level change. A functional test can be performed on the entire device using the test button on the electronic insert or using the test magnet (can be ordered as an option) with the housing closed.

Supply voltage

U = DC 9 to 20 V

The device must be powered by a voltage supply categorized as "CLASS 2" or "SELV".

Comply with the following according to IEC 61010-1: Provide a suitable circuit breaker for the device and limit the current to 500 mA, e.g. by installing a 0.5 A fuse (slow-blow) in the power supply circuit.

Power consumption

P < 1.0 W

Connectable load

Loads switched via two potential-free change-over contacts (DPDT)

- I_{AC} ≤ 6 A, U~ ≤ AC 253 V; P~ ≤ 1 500 VA, cos φ = 1, P~ ≤ 750 VA, cos φ > 0.7
- I_{DC} ≤ 6 A to DC 30 V, I DC ≤ 0.2 A to 125 V

Additional restrictions for the connectable load depend on the selected approval. Pay attention to the information in the Safety Instructions (XA).

According to IEC 61010, the following applies: Total voltage from relay outputs and auxiliary power supply ≤ 300 V

Electronic insert FEL62 DC PNP preferred for small DC load currents, e.g. connection to a PLC.

Relay contact material: Silver/nickel AgNi 90/10

When connecting a device with high inductance, fit a spark quenching unit to protect the relay contact. A fine-wire fuse (depending on the connected load) protects the relay contact in the event of a short-circuit.

Behavior of output signal

- OK status: Relay energized
- Demand mode: Relay de-energized
- Alarm: Relay de-energized

Terminals

Terminals for cable cross-section up to 2.5 mm² (14 AWG). Use ferrules for the wires.

Overvoltage protection

Overvoltage category I

Terminal assignment

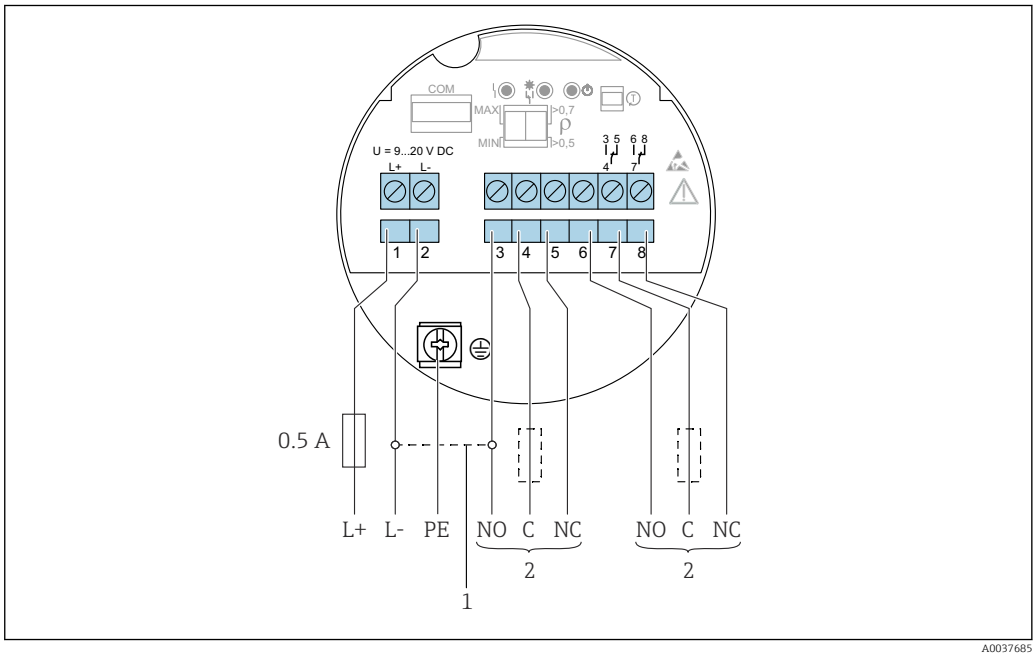

9 *DC connection with relay output, electronic insert FEL64 DC*

1 *When bridged, the relay output works with NPN logic*
2 *Connectable load*

Behavior of switch output and signaling

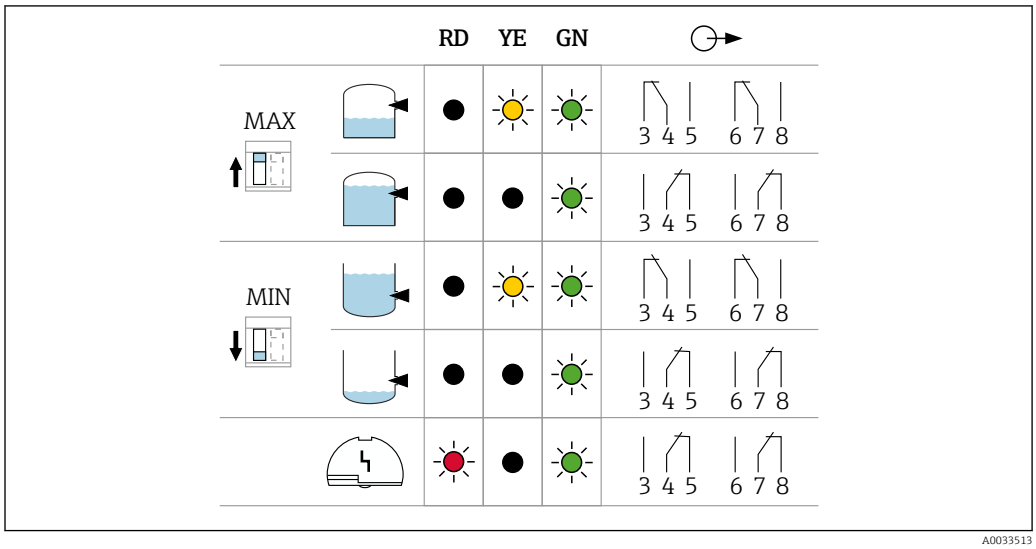

10 Behavior of switch output and signaling, electronic insert FEL64 DC

MAX DIP switch for setting MAX safety mode
MIN DIP switch for setting MIN safety mode
RD LED red for alarm
YE LED yellow, switch status
GN LED green, operational status, device on

PFM output (electronic insert FEL67)

- For connection to Endress+Hauser Nivotester switching units FTL325P and FTL375P
- PFM signal transmission; pulse frequency modulation, superimposed on the power supply along the two-wire cabling
- Functional testing without level change:
  - A functional test can be performed on the device using the test button on the electronic insert.
  - The functional test can also be prompted by disconnecting the supply voltage or triggered directly by the Nivotester FTL325P and FTL375P switching unit.

Supply voltage

U = DC 9.5 to 12.5 V_{DC}

The device must be powered by a voltage supply categorized as "CLASS 2" or "SELV".

Comply with the following according to IEC 61010-1: Provide a suitable circuit breaker for the device.

Power consumption

P ≤ 150 mW with Nivotester FTL325P or FTL375P

Behavior of output signal

- OK status: MAX mode of operation 150 Hz, MIN mode of operation 50 Hz
- Demand mode: MAX mode of operation 50 Hz, MIN mode of operation 150 Hz
- Alarm: MAX/MIN mode of operation 0 Hz

Terminals

Terminals for cable cross-section up to 2.5 mm^2 (14 AWG). Use ferrules for the wires.

Overvoltage protection

Overvoltage category I

Terminal assignment

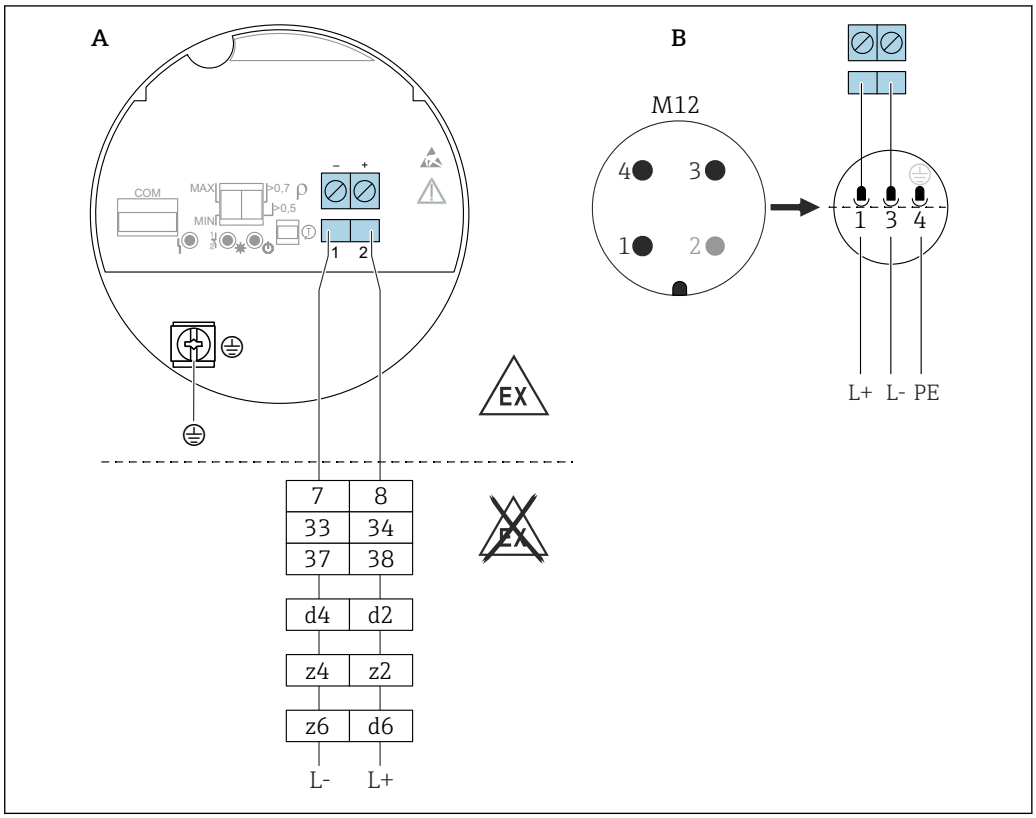

11 PFM output, electronic insert FEL67

A Connection wiring with terminals
B Connection wiring with M12 plug in housing according to EN61131-2 standard
7/ 8: Nivotester FTL325P 1 CH, FTL325P 3 CH input 1
33/ 34: Nivotester FTL325P 3 CH input 2
37/ 38: Nivotester FTL325P 3 CH input 3
d4/ d2: Nivotester FTL375P input 1
z4/ z2: Nivotester FTL375P input 2
z6/ d6: Nivotester FTL375P input 3

Connection cable

- Maximum cable resistance: 25 Ω per core
- Maximum cable capacitance: < 100 nF
- Maximum cable length: 1 000 m (3 281 ft)

Behavior of switch output and signaling

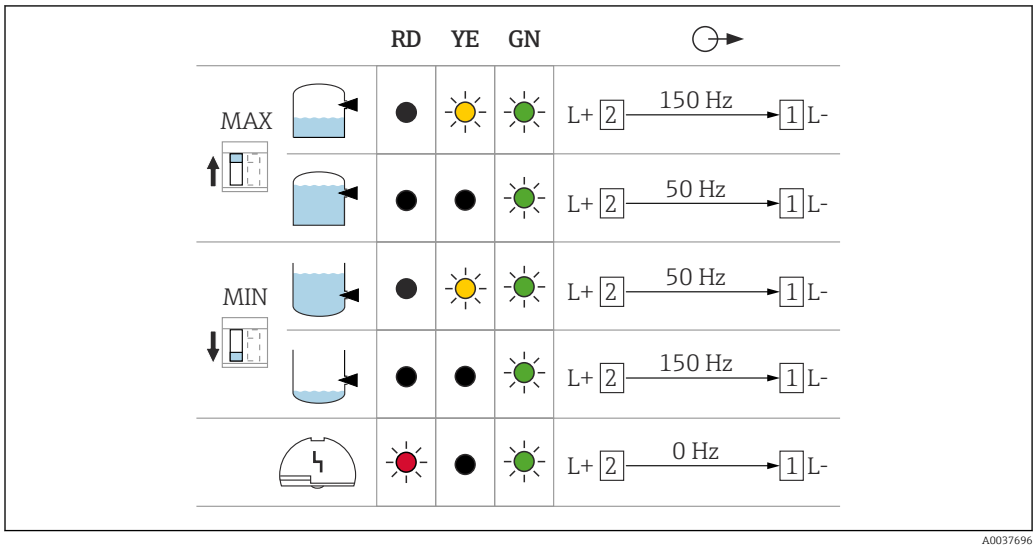

12 Switching behavior and signaling, electronic insert FEL67

MAX DIP switch for setting MAX safety mode
MIN DIP switch for setting MIN safety mode
RD LED red for alarm
YE LED yellow, switch status
GN LED green, operational status, device on

The switches for MAX/MIN on the electronic insert and the FTL325P switching unit must be set according to the application. Only then is it possible to perform the functional test correctly.

2-wire NAMUR > 2.2 mA/< 1.0 mA (electronic insert FEL68)

- To connect to isolating amplifiers according to NAMUR (IEC 60947-5-6), e.g. Nivotester FTL325N from Endress+Hauser
- To connect to isolating amplifiers of third-party suppliers according to NAMUR (IEC 60947-5-6), a permanent power supply for electronic insert FEL68 must be ensured
- Signal transmission H-L edge 2.2 to 3.8 mA/0.4 to 1.0 mA according to NAMUR (IEC 60947-5-6) on two-wire cabling
- Functional testing without level change. A functional test can be performed on the device using the test button on the electronic insert or using the test magnet (can be ordered as an option) with the housing closed.
  The functional test can also be triggered by interrupting the supply voltage or activated directly from the Nivotester FTL325N.

Supply voltage

U = DC 8.2 V ±10 %

The device must be powered by a voltage supply categorized as "CLASS 2" or "SELV".

Comply with the following according to IEC 61010-1: Provide a suitable circuit breaker for the device.

Power consumption

NAMUR IEC 60947-5-6

< 6 mW with I < 1 mA; < 38 mW with I = 3.5 mA

Connection data interface

NAMUR IEC 60947-5-6

Behavior of output signal

- OK status: Output current 2.2 to 3.8 mA
- Demand mode: Output current 0.4 to 1.0 mA
- Alarm: Output current < 1.0 mA

Terminals

Terminals for cable cross-section up to 2.5 mm² (14 AWG). Use ferrules for the wires.

Overvoltage protection

Overvoltage category I

Terminal assignment

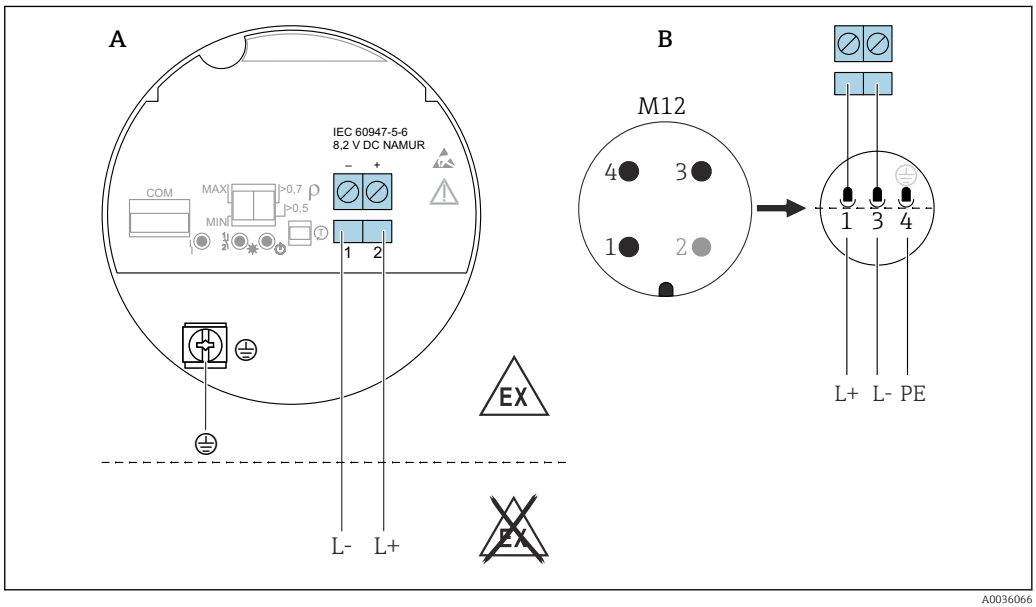

13 2-wire NAMUR ≥ 2.2 mA/≤ 1.0 mA, electronic insert FEL68

A Connection wiring with terminals
B Connection wiring with M12 plug in housing according to EN61131-2 standard

Behavior of switch output and signaling

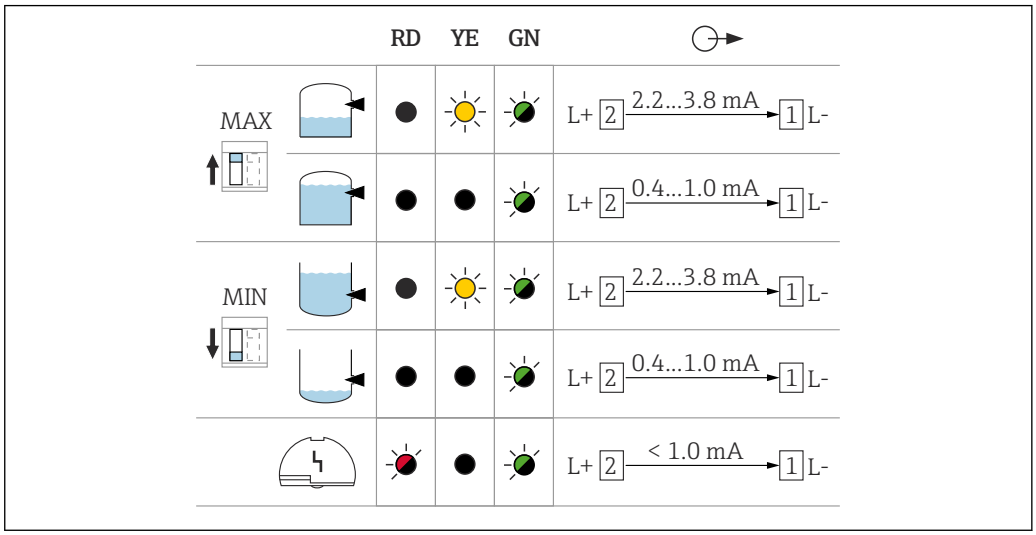

14 Behavior of switch output and signaling, electronic insert FEL68

MAX DIP switch for setting MAX safety mode
MIN DIP switch for setting MIN safety mode
RD Red LED for alarm
YE Yellow LED, switch status
GN Green LED, operational status, device on

Electronic insert FEL68 with Bluetooth module

The Bluetooth module for use in conjunction with the electronic insert FEL68 (2-wire NAMUR) must be ordered separately with the necessary battery.

The following versions can be optionally selected in the Product Configurator:
Application package: Heartbeat Verification + Monitoring for NAMUR output
Accessory mounted: Bluetooth for NAMUR output

The order number of the **Bluetooth module, including the required battery,** are subsequently displayed in the Product Configurator.

LED module VU120 (optional)

Supply voltage	U = 12 to 55 V_{DC}, U = 19 to 253 V_{AC}, 50 Hz/60 Hz
Power consumption	P ≤ 0.7 W, S < 6 VA
Current consumption	I_{max} = 0.4 A
Signaling of operational status	

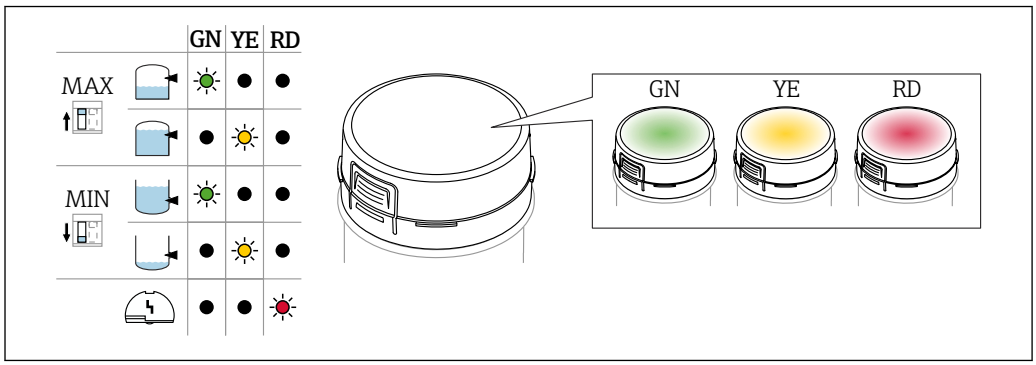

15 LED module, the LED lights up in green (GN), yellow (YE) or red (RD)

A brightly lit LED indicates the operational status (switch status or alarm status). The LED module can be connected to the following electronic inserts: FEL62, FEL64, FEL64DC.

See the accompanying Operating Instructions for more detailed information on connection and the switching states. Documentation currently available on the Endress+Hauser- website: www.endress.com → Downloads.

Bluetooth® module and Heartbeat Technology

Bluetooth® module VU121 (optional)

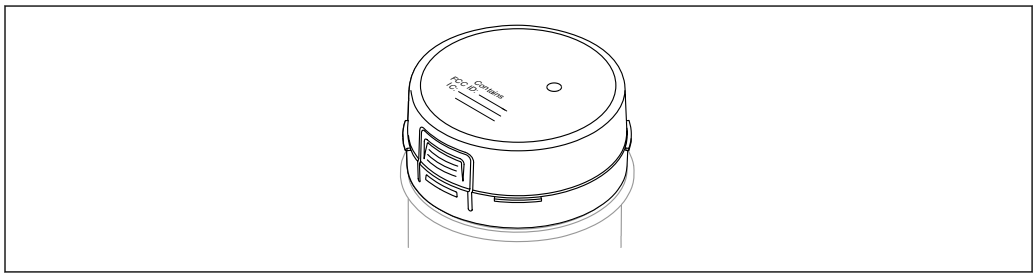

16 Bluetooth® module VU121

- The Bluetooth® module can be connected via the COM interface to the following electronic inserts: FEL61, FEL62, FEL64, FEL64 DC, FEL67, FEL68 (2-wire NAMUR).
- The Bluetooth® module is only available in conjunction with the Heartbeat Verification + Monitoring application package.
- The Bluetooth® module with battery is suitable for use in hazardous areas.
- In conjunction with electronic insert FEL68 (2-wire NAMUR), the Bluetooth® module must be ordered separately with the required battery.
- The yellow LED on electronic insert FEL68 is disabled if the Bluetooth® module is connected.

For additional information about the connection, see the Operating Instructions for the device. Documentation currently available on the Endress+Hauser- website: www.endress.com → Downloads.

Batteries – use and handling

For energy-related reasons, Bluetooth® module VU121 requires a special battery when operated with electronics insert FEL68 (2-wire NAMUR).

The battery is categorized as dangerous goods when transported by air and must not be installed in the device when shipped.

Replacement batteries can be purchased from a specialist retailer.

Replacement batteries

Only the following types of AA 3.6 V lithium batteries made by the manufacturers listed below are suitable as replacement batteries:
- SAFT LS14500
- TADIRAN SL-360/s
- XENOENERGY XL-060F

Isolation lug in battery compartment

NOTICE

Premature discharge of the battery due to removing the isolation lug
Removing the isolation lug from the battery compartment of the Bluetooth® module will cause the battery to be discharged prematurely, regardless of the sensor power supply.
- ▶ The isolation lug must remain in the battery compartment of the Bluetooth® module for as long as the sensors are in storage.

Operating life

- If the batteries are discharged, a Bluetooth® connection is no longer possible
- At ambient temperatures from +10 to +40 °C (+50 to +104 °F), the service life of the Bluetooth® module without replacing the battery is at least five years with a maximum of 60 downloads of complete datasets.
  Requirement: The sensor is 99% in the OK status (demand mode requires increased power consumption)
  The battery life is based on a scenario where the sensor is connected and powered.

Replacing the battery

- ▶ Before replacing the battery, the Bluetooth® module must be disconnected from electronic insert FEL68.
  - ↳ Only then will the battery status display be detected correctly.

Approvals

The Bluetooth® module is approved for use with the following types of protection for devices: Ex i, Ex d, Ex e or Ex t. The temperature class of the device is limited to T4 to T1 if the Bluetooth® module is used with the Ex i/IS type of protection in conjunction with electronic insert FEL68 (2-wire NAMUR) and the required battery in the Bluetooth® module.

Additional technical data

- Free-field range: 50 m (165 ft) max.
- Operation radius with intervisibility around the device: 10 m (33 ft)

For documentation on radio approvals, see the Endress+Hauser website: www.endress.com → Downloads.

Heartbeat Technology

Heartbeat Technology modules

Heartbeat Technology comprises 3 modules. These three modules combined check, evaluate and monitor device functionality and process conditions.

- Heartbeat Diagnostics
- Heartbeat Verification
- Heartbeat Monitoring

Performance characteristics

Reference operating conditions

- As per IEC 62828-1
- Ambient temperature: +23 °C (+73 °F)
- Process temperature: +23 °C (+73 °F)
- Humidity φ = constant, in the range: 5 to 80 % rF ± 5 %
- Medium density (water): 1 g/cm³ (62.4 lb/ft³)
- Medium viscosity: 1 mPa·s
- Atmospheric pressure p_A = constant, in the range: 860 to 1060 mbar (12.47 to 15.37 psi)
- Process pressure: Atmospheric pressure/unpressurized
- Sensor installation: Vertically and from above
- Density selection switch: > 0.7 g/cm³ (43.7 lb/ft³)
- Switch direction of sensor: Uncovered to covered
- Supply voltage: DC 24 V ±3 V

Taking the switch point into consideration

The following are typical switch points, depending on the orientation of the level switch.

Minimum distance between the tuning fork and the tank wall or pipe wall: 10 mm (0.39 in)

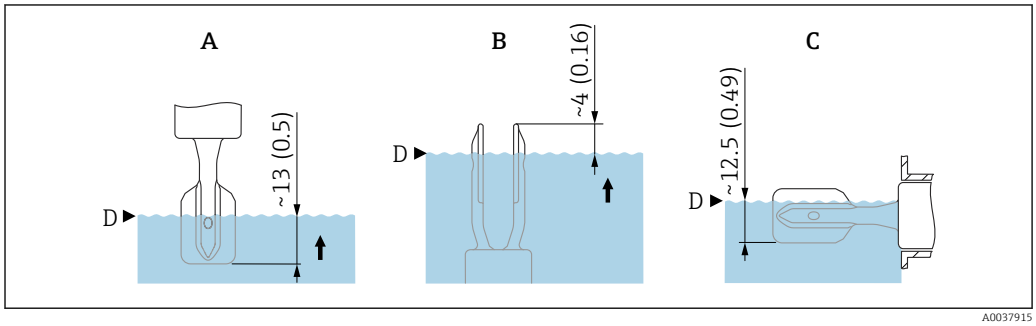

17 *Typical switch points. Unit of measurement mm (in)*

A Installation from above
B Installation from below
C Installation from the side
D Switch point (at reference operating conditions, e.g., water with a temperature of 23 °C (73 °F))

Maximum measurement error

At reference operating conditions: max. ± 1 mm (0.04 in) at switch point

Hysteresis

Typically 2.5 mm (0.1 in)

Non-repeatability

0.5 mm (0.02 in)

Influence of the process temperature

The switch point moves from +1.4 to −2.6 mm (+0.06 to −0.1 in) in the temperature range of −50 to +150 °C (−58 to +302 °F)

Influence of the process pressure

The switch point moves from 0 to 2.6 mm (0 to 0.1 in) in the pressure range of −1 to +64 bar (−14.5 to +928 psi)

Influence of the density of the process medium (at room temperature and normal pressure)

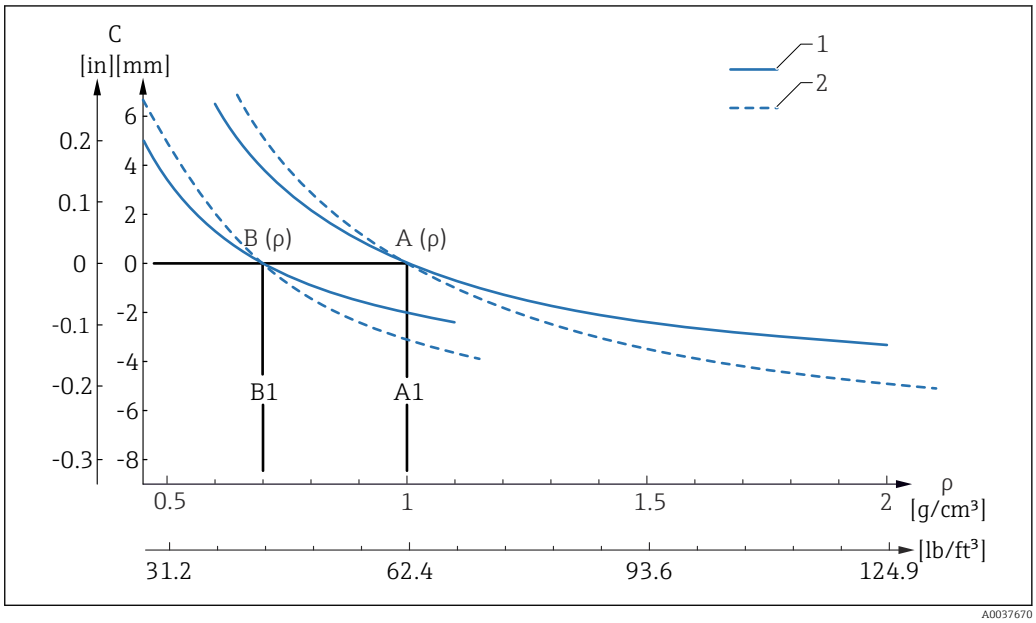

18 Switch point deviation over density

A Density switch setting (ρ) > 0.7 g/cm³ (43.7 lb/ft³)
A1 Reference operating condition ρ = 1 g/cm³ (62.4 lb/ft³)
B Density switch setting (ρ) > 0.5 g/cm³ (31.21 lb/ft³)
B1 Reference operating condition ρ = 0.7 g/cm³ (43.7 lb/ft³)
C Switch point deviation
1 Material 316L
2 Material Alloy C22

Density setting
- $TC_{typ.}$, [mm/10 k]
  - $\rho > 0.7$ g/cm³ (43.7 lb/ft³): −0.2
  - $\rho > 0.5$ g/cm³ (31.21 lb/ft³): −0.2
- $Pressure_{typ.}$, [mm/10 bar]
  - $\rho > 0.7$ g/cm³ (43.7 lb/ft³): −0.3
  - $\rho > 0.5$ g/cm³ (31.21 lb/ft³): −0.4

Installation

Mounting location, orientation

Mounting instructions
- Any orientation for compact version or version with a pipe length of up to 500 mm (19.7 in)approx.
- Vertical orientation from above for device with long pipe
- Minimum distance between the tuning fork and the tank wall or pipe wall: 10 mm (0.39 in)

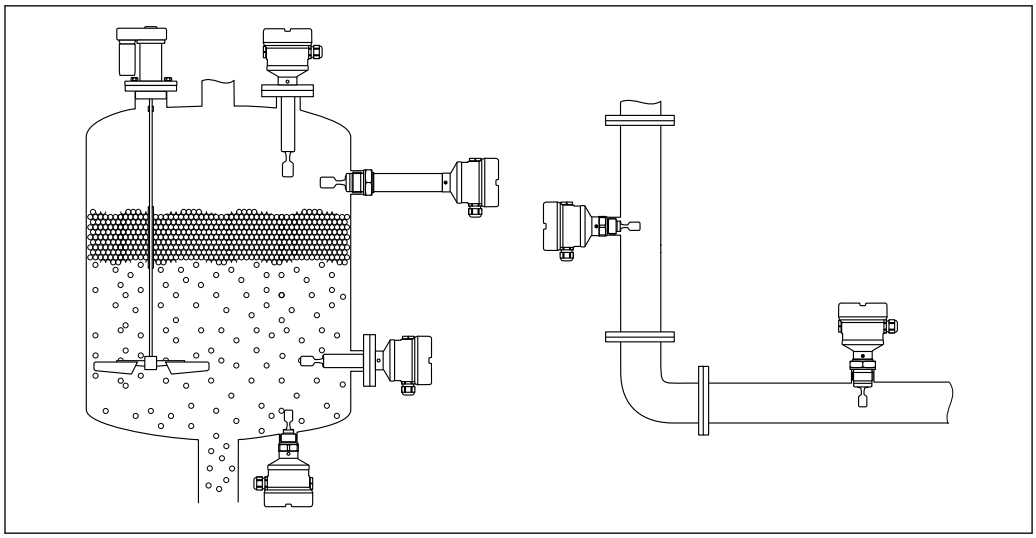

19 *Installation examples for a vessel, tank or pipe*

Installation instructions

Take viscosity into consideration

Viscosity values
- Low viscosity : < 2 000 mPa·s
- High viscosity: > 2 000 to 10 000 mPa·s

Low viscosity

Low viscosity, e.g. water: < 2 000 mPa·s

It is permitted to position the tuning fork within the installation socket.

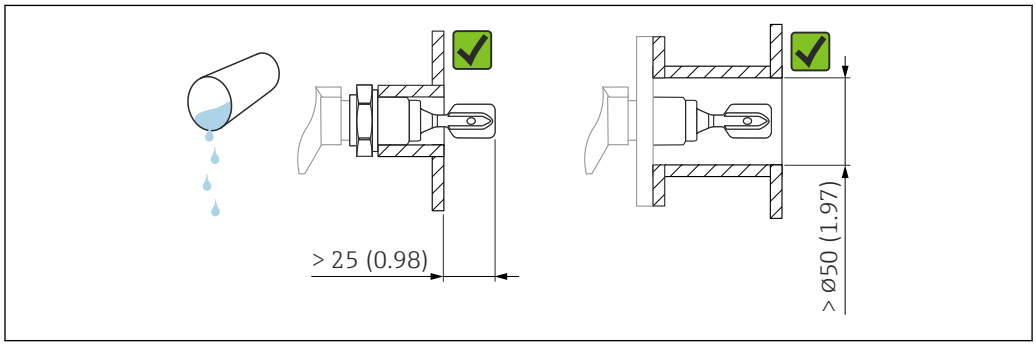

20 *Installation example for low-viscosity liquids. Unit of measurement mm (in)*

High viscosity

NOTICE

Highly viscous liquids may cause switching delays.
- ▶ Make sure that the liquid can run off the tuning fork easily.
- ▶ Deburr the socket surface.

High viscosity, e.g. viscous oils: ≤ 10 000 mPa·s

The tuning fork must be located outside the installation socket!

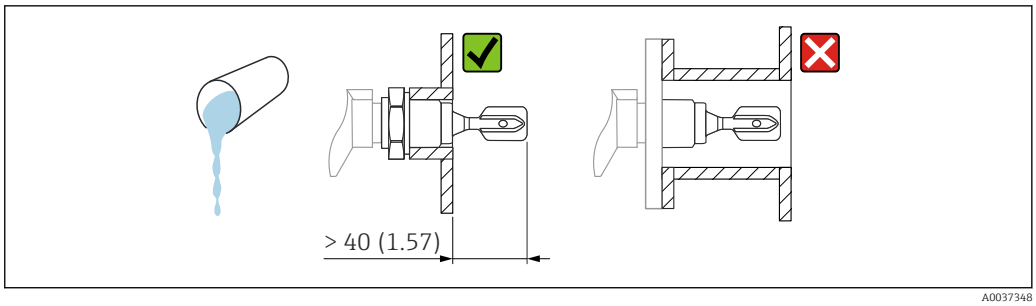

21 *Installation example for a highly viscous liquid. Unit of measurement mm (in)*

Avoid buildup

- Use short installation sockets to ensure that the tuning fork projects freely into the vessel
- Leave sufficient distance between the buildup expected on the tank wall and the tuning fork

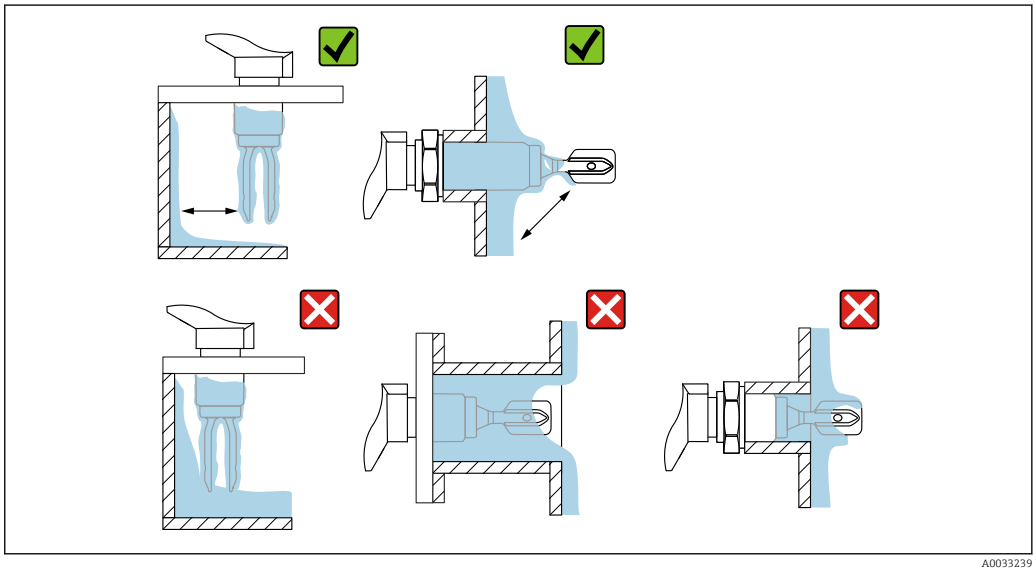

22 *Installation examples for a highly viscous process medium*

Take clearance into consideration

Allow sufficient space outside the tank for mounting, connection and settings involving the electronic insert.

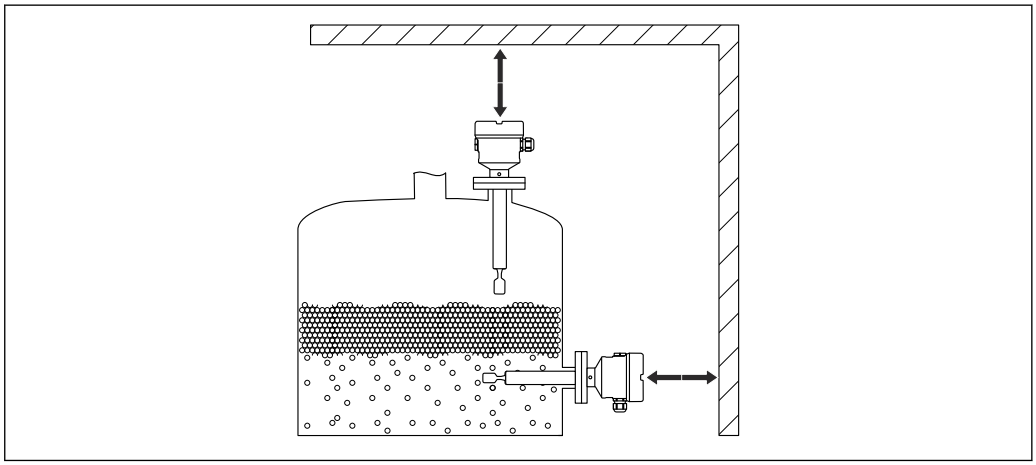

23 *Take clearance into consideration*

Align the vibrating fork using the marking

The vibrating fork can be aligned using the marking in such a way that the medium drains off easily and buildup is avoided.

- Markings for threaded connections: Circle (material specification/thread designation opposite)
- Markings for flange or clamp connections: Line or double line

In addition, the threaded connections have a matrix code that is **not** used for alignment.

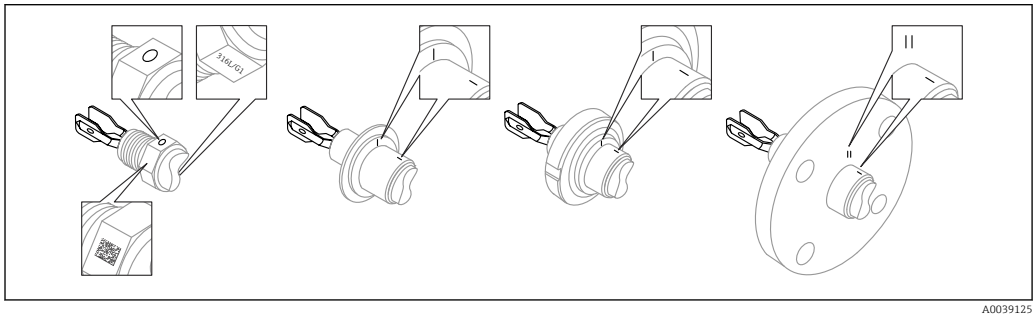

A0039125

24 *Position of the vibrating fork when installed horizontally in the vessel using the marking*

Installing the device in piping

- Flow velocity up to 5 m/s with a viscosity of 1 mPa·s and density of 1 g/cm³ (62.4 lb/ft³) (SGU). Check for correct functioning in the event of other process medium conditions.
- The flow will not be significantly impeded if the tuning fork is correctly aligned and the marking is pointing in the direction of flow.
- The marking is visible when installed

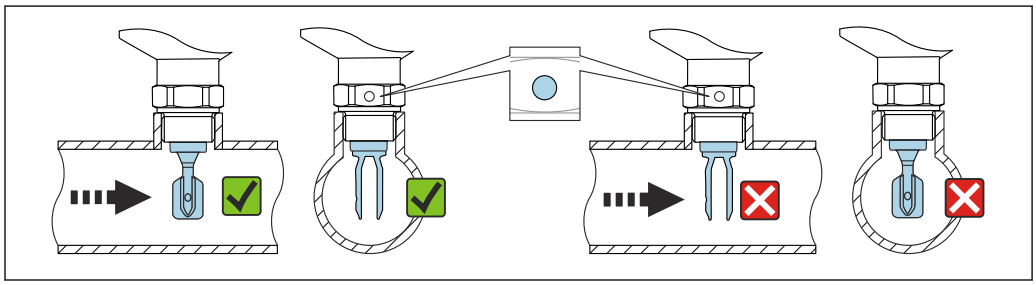

A0034851

25 *Installation in pipes (take fork position and marking into consideration)*

Aligning the cable entry

All housings can be aligned. Forming a drip loop on the cable prevents moisture from entering the housing.

Housing without set screw

The device housing can be rotated up to 350°.

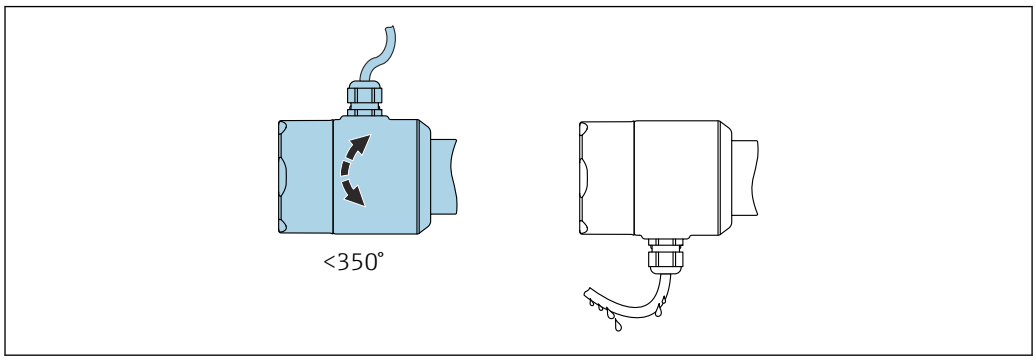

A0052359

26 *Housing without set screw; form a drip loop on the cable.*

Housing with locking screw

NOTICE

The locking screw is not sufficiently tightened when the device is delivered.
The housing may rotate and become loose due to vibration.
▶ Tighten the locking screw to 3.5 Nm (2.58 lbf ft).

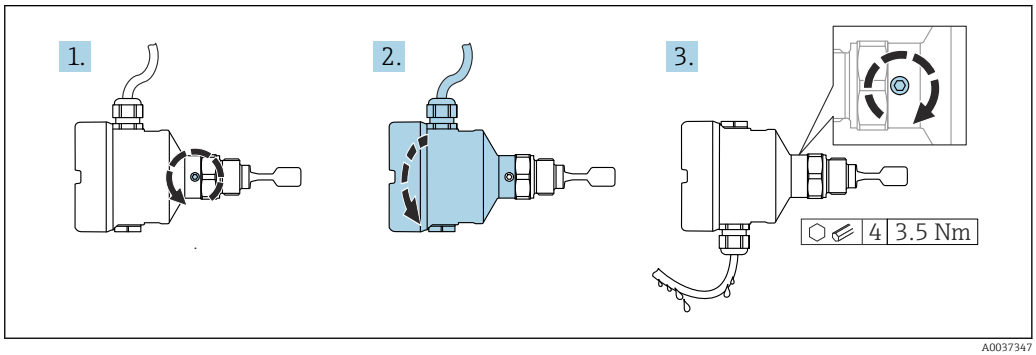

27 *Housing with external locking screw; form a drip loop on the cable*

Special installation instructions

Vessel with heat insulation

If process temperatures are high, the device should be included in the vessel insulation system to prevent the electronics from heating as a result of thermal radiation or convection. The insulation in this case should not be higher than the neck of the device.

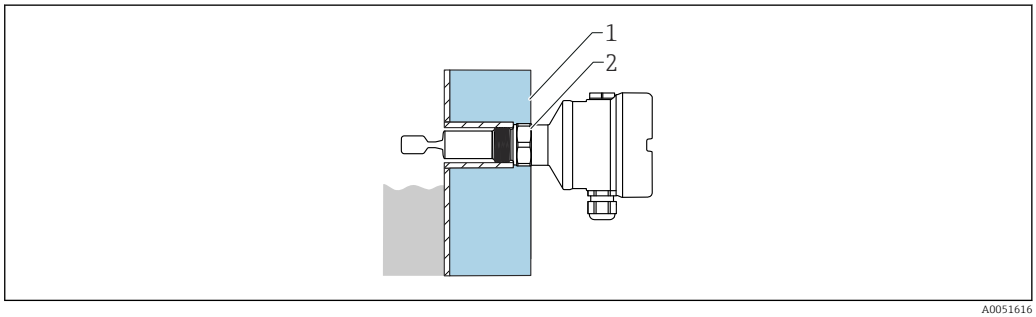

28 *Example of a vessel with heat insulation*

1 *Vessel insulation*
2 *Insulation (up to the housing neck max.)*

Support the device

Support the device in the event of severe dynamic load. Maximum lateral loading capacity of the pipe extensions and sensors: 75 Nm (55 lbf ft).

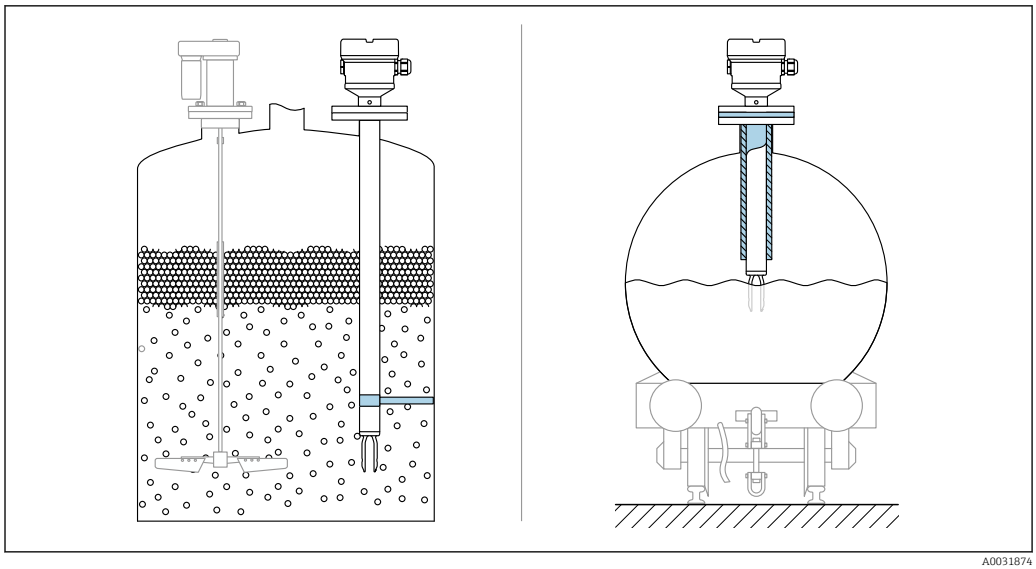

29 *Examples of support in the event of dynamic load*

Marine approval: In the case of pipe extensions or sensors longer than 1 600 mm (63 in), a support is needed at least every 1 600 mm (63 in).

Weld-in adapter with leakage hole

Position the weld-in adapter so that the leakage hole points downwards. This allows any leakage to be detected at an early stage, as the escaping medium becomes visible.

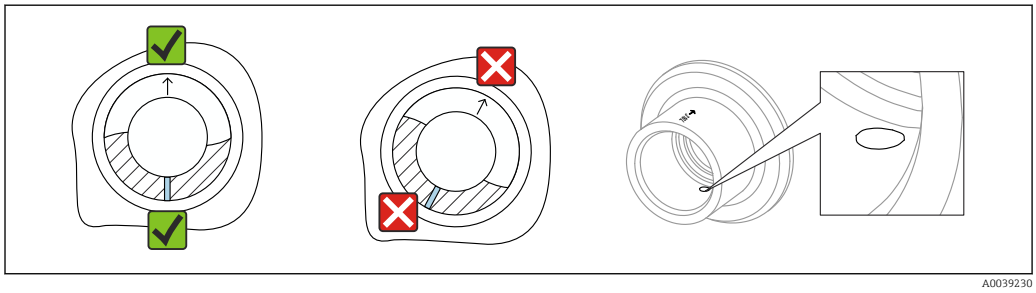

30 *Weld-in adapter with leakage hole*

Sliding sleeves

For more details, see the "Accessories" section.

Special Documentation SD02398F (Installation Instructions)

Environment

Ambient temperature range

WARNING

Permitted connection voltage exceeded!

- For electrical safety reasons, the maximum connection voltage for all electronic inserts at ambient temperatures below −40 °C (−40 °F) is limited to a maximum of 35 V DC.

−40 to +70 °C (−40 to +158 °F)

Optionally available to order::
- −50 °C (−58 °F) with restricted operating life and performance
- −60 °C (−76 °F) with restricted operating life and performance
  - Below −50 °C (−58 °F): Devices can be permanently damaged

The minimum permitted ambient temperature of the plastic housing is limited to −20 °C (−4 °F); 'indoor use' applies to North America.

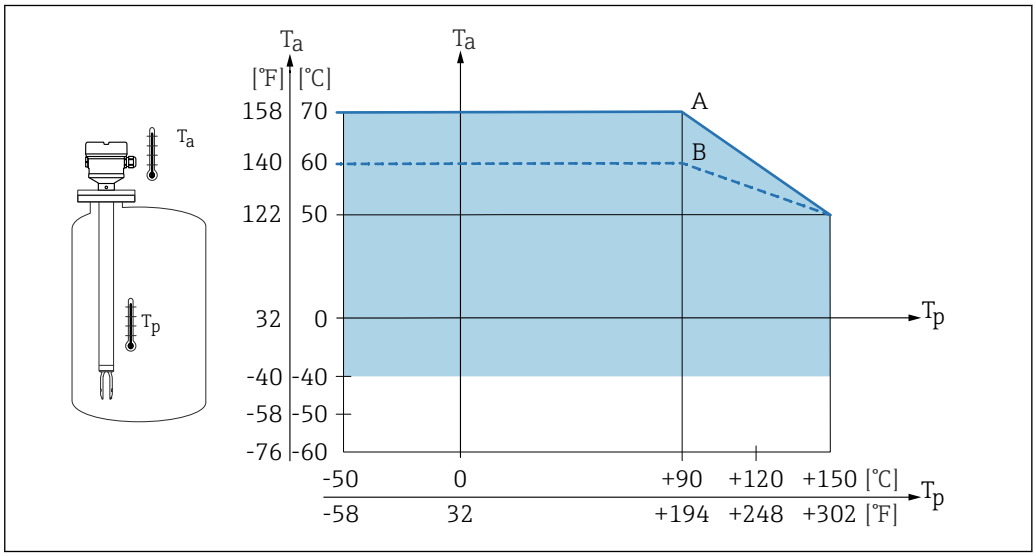

31 Permitted ambient temperature T_a at the housing as a function of the process temperature T_p in the vessel:

A Device without LED module; at FEL64 and process temperature T_p > 90 °C: Max. load current 4 A
B Device with LED module; at FEL64 and process temperature T_p > 90 °C: Max. load current 2 A

For devices with a temperature spacer, the following ambient temperatures apply across the entire process temperature range:
A: 70 °C (158 °F)
B: 60 °C (140 °F)

- Low temperatures are not possible for SIL
- Bluetooth® module:
  - −50 °C (−58 °F) for non-Ex, Ex ia and Ex d
  - −60 °C (−76 °F) for non-Ex
- LED module:
  - −50 °C (−58 °F) for non-Ex, Ex ia and Ex d
  - −60 °C (−76 °F) for non-Ex

Outdoor operation in strong sunlight:
- Mount the device in a shaded location
- Avoid direct sunlight, particularly in warmer climatic regions
- Use a protective cover, which can be ordered as an accessory

Hazardous area

In the hazardous area, the permitted ambient temperature can be limited depending on the zones and gas groups. Pay attention to the information in the Ex documentation (XA).

Storage temperature	−40 to +80 °C (−40 to +176 °F) Optional: −50 °C (−58 °F), −60 °C (−76 °F)
Humidity	Operation up to 100 %. Do not open in a condensing atmosphere.
Operating altitude	As per IEC 61010-1 Ed.3: ▪ Up to 2 000 m (6 600 ft) above sea level ▪ Can be extended to 3 000 m (9 800 ft) above sea level if overvoltage protection is used
Climate class	As per IEC 60068-2-38 test Z/AD
Degree of protection	Testing according to IEC 60529 and NEMA 250 IP68 test condition: 1.83 m H_2O for 24 h

Housing
See cable entries

Cable entries
- M20 coupling, plastic, IP66/68 NEMA Type 4X/6P
- M20 coupling, nickel-plated brass, IP66/68 NEMA Type 4X/6P
- M20 coupling, 316L, IP66/68 NEMA Type 4X/6P
- M20 thread, IP66/68 NEMA Type 4X/6P
- G ½ thread, NPT ½, NPT ¾ IP66/68 NEMA Type 4X/6P

Degree of protection for M12 plug
- When housing is closed and connection cable is plugged in: IP66/67 NEMA Type 4X
- When housing is open or connection cable is not plugged in: IP20, NEMA Type 1

NOTICE

M12 plug: Loss of IP protection class due to incorrect installation!
- ▶ The degree of protection only applies if the connecting cable used is plugged in and screwed tight.
- ▶ The degree of protection only applies if the connecting cable used is specified according to IP67 NEMA Type 4X.

If the "M12 plug" option is selected as the electrical connection, **IP66/67 NEMA Type 4X** applies for all housing types.

Vibration resistance

As per IEC 60068-2-64-2008
a(RMS) = 50 m/s², f = 5 to 2 000 Hz, t = 3 axes x 2 h

For increased oscillations or vibrations, the following additional option is recommended: feature "Application", version "B" 100 bar (1 450 psi) process pressure.

Shock resistance

As per IEC 60068-2-27-2008: 300 m/s² [= 30 g_n] + 18 ms

g_n: standard acceleration of gravity

Mechanical load

Support the device in the event of severe dynamic load. Maximum lateral loading capacity of the pipe extensions and sensors: 75 Nm (55 lbf ft).

For more details, see the "Supporting the device" section.

Pollution degree

Pollution degree 2

Electromagnetic compatibility (EMC)

- Electromagnetic compatibility according to EN 61326 series. Interference immunity according to Table 2 (Industrial), interference radiation according to Group 1 Class B
- Electromagnetic compatibility as per NAMUR recommendation EMC NE21
- Fulfills the requirements of functional safety (SIL) in accordance with EN 61326-3-1 (with FEL60H electronic insert)

For more details, refer to the EU Declaration of Conformity.

Process

Process temperature range

−50 to +150 °C (−58 to +302 °F)

Observe pressure and temperature dependency, see the "Process pressure range of the sensors" section.

Thermal shock

≤ 120 K/s

Process pressure range

−1 to +64 bar (−14.5 to 928 psi) at max. 150 °C (302 °F)

Optionally available for pipe extension and short pipe version:
100 bar (1 450 psi) at max. 150 °C (302 °F)

The maximum pressure for the device depends on the lowest-rated element with regard to pressure.

Components are: process connection, optional mounting parts, or accessories.

WARNING

Incorrect design or use of the device may lead to bursting parts!
This may result in severe, possibly irreversible injury to persons and environmental hazards.
- Only operate the device within the specified limits for the components!
- MWP (maximum working pressure): The maximum working pressure is specified on the nameplate. This value refers to a reference temperature of 20 °C (68 °F) and may be present at the device for an unlimited time. Note temperature dependency of MWP. For higher temperatures, refer to the following standards for the permitted pressure values for flanges:EN 1092-1 (materials 1.4435 and 1.4404 are identical with regard to their stability/ temperature property and are grouped together in under 13E0 in EN 1092-1 Tab. 18. The chemical composition of the two materials can be identical), ASME B 16.5a, JIS B 2220 (the latest version of the standard applies in each case).
- The Pressure Equipment Directive (2014/68/EU) uses the abbreviation "PS". The abbreviation "PS" corresponds to the maximum working pressure (MWP) of the device
- MWP data that deviate from this is provided in the relevant sections of the Technical Information.

The lowest value from the derating curves of the device and of the selected flange applies in each case.

Devices with CRN approval: maximum 90 bar (1 305 psi) for devices with a pipe extension
Information on the Endress+Hauser website: www.endress.com → Downloads.

Process pressure range of the sensors

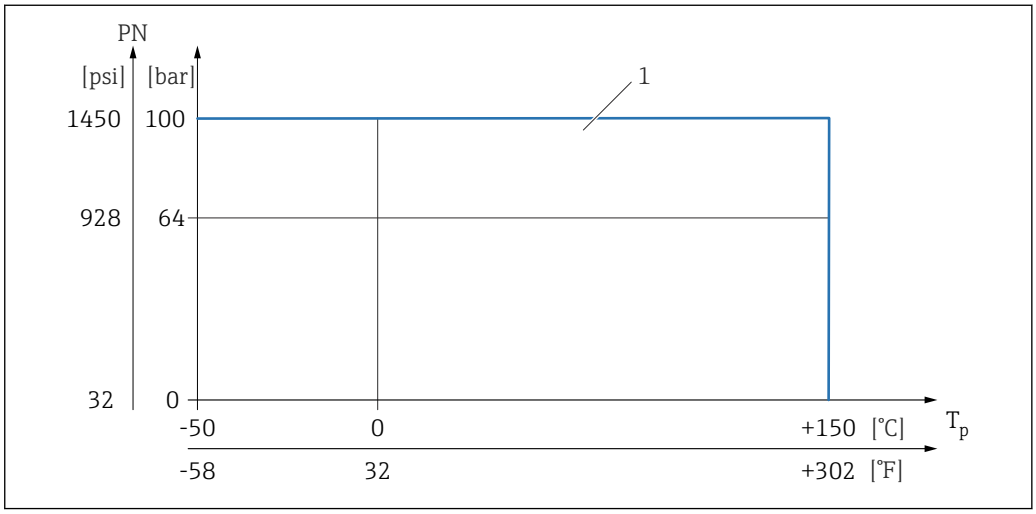

1 *Permissible pressure rating with the "Application" feature selected in the Product Configurator, version "100 bar (1 450 psi)". Exceptions: see "Process connections" section. Canadian CRN approval: The maximum permitted process pressure is limited to 90 bar (1 305 psi) only in combination with the CRN approval. More details on the maximum pressure values are available in the download area of the product page under "www.endress.com".*

Overpressure limit

- PN = 64 bar (928 psi): overpressure limit = 1.5·PN maximum100 bar (1 450 psi) depending on process connection selected
- Membrane burst pressure at 200 bar (2 900 psi)
- PN = 100 bar (1 450 psi): overpressure limit = 1.5·PN maximum150 bar (2 175 psi) depending on process connection selected
- Membrane burst pressure at 400 bar (5 800 psi)

The device function is limited during the pressure test.

The mechanical integrity is guaranteed at pressures up to 1.5 times the process nominal pressure (PN).

Medium density	**Liquids with density > 0.7 g/cm³ (43.7 lb/ft³)** Switch position > 0.7 g/cm³ (43.7 lb/ft³), as-delivered state **Liquids with density > 0.5 g/cm³ (31.2 lb/ft³)** Switch position > 0.5 g/cm³ (31.2 lb/ft³), can be configured via DIP switch **Liquids with density > 0.4 g/cm³ (25.0 lb/ft³)** ▪ Optionally available to order ▪ SIL for defined media and process parameters on request ▪ Fixed value that cannot be changed The function of the DIP switch is interrupted
Viscosity	≤ 10 000 mPa·s
Pressure tightness	Up to vacuum In vacuum evaporation plants, select the 0.4 g/cm³ (25.0 lb/ft³)/ density setting.
Solids contents	Ø ≤ 5 mm (0.2 in)

Mechanical construction

Design, dimensions	**Device height** The device height consists of the following components: ▪ Housing including cover ▪ Temperature spacer and/or pressure-tight feedthrough (second line of defense), optional ▪ Compact version, pipe extension or short pipe version ▪ Process connection The individual heights of the components can be found in the following sections: ▪ Determine the height of the device and add the individual heights ▪ Take into consideration the installation distance (space that is used to install the device)

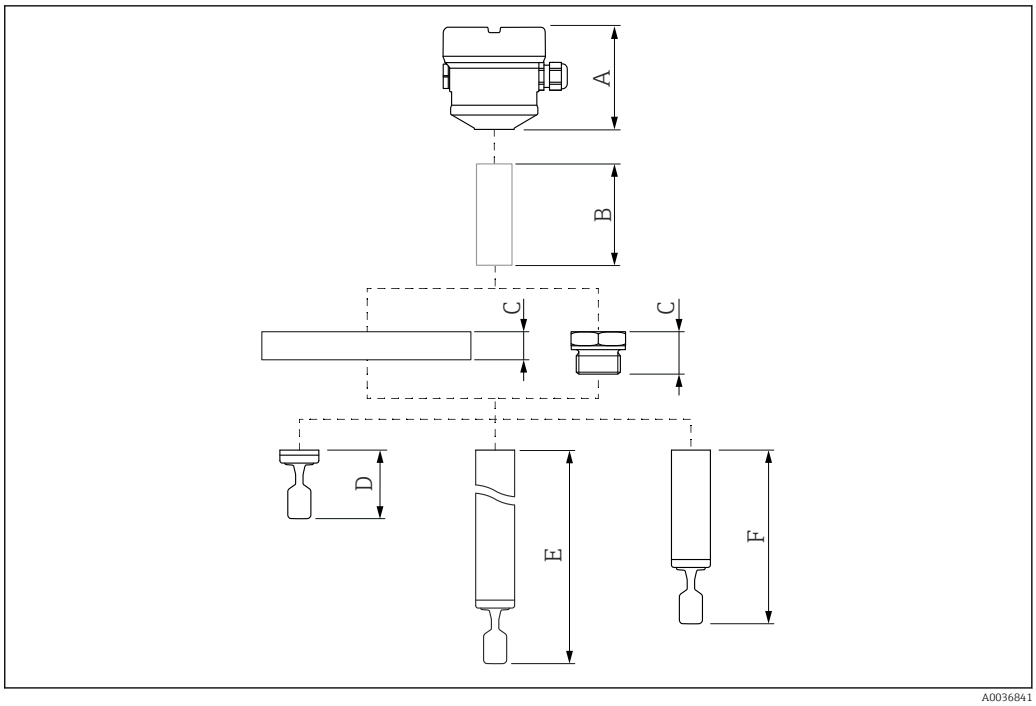

32 *Components for determining the height of the device*

A Housing including cover
B Temperature spacer, pressure-tight feedthrough (optional)
C Process connection
D Probe design: compact version with vibrating fork
E Probe design: pipe extension with vibrating fork
F Probe design: short pipe version with vibrating fork

Dimensions

The following dimensions are rounded values. As a result, there may be deviations from the specifications in the Product Configurator at www.endress.com.

To view CAD data:

1. Enter www.endress.com in your web browser
2. Search for the device
3. Select the **Configuration** button
4. Configure the device
5. Select the **CAD drawings** button

Housing and cover

All housings can be aligned. The housing alignment can be fixed on housings with a locking screw.

Devices with a Bluetooth or LED module require a tall cover (transparent plastic cover or cover with sight glass). The Bluetooth or LED module cannot be used in conjunction with the 316L single-compartment housing.

Single compartment housing, plastic

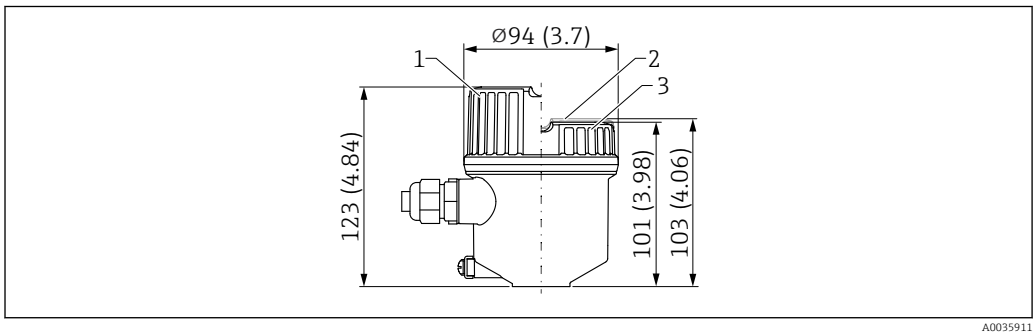

33 Dimensions of single compartment housing, plastic. Unit of measurement mm (in)

1 *Height with plastic cover (transparent)*
2 *Height with cover with plastic sight glass (optional)*
3 *Height with cover without sight glass*

Single-compartment housing, aluminum, coated

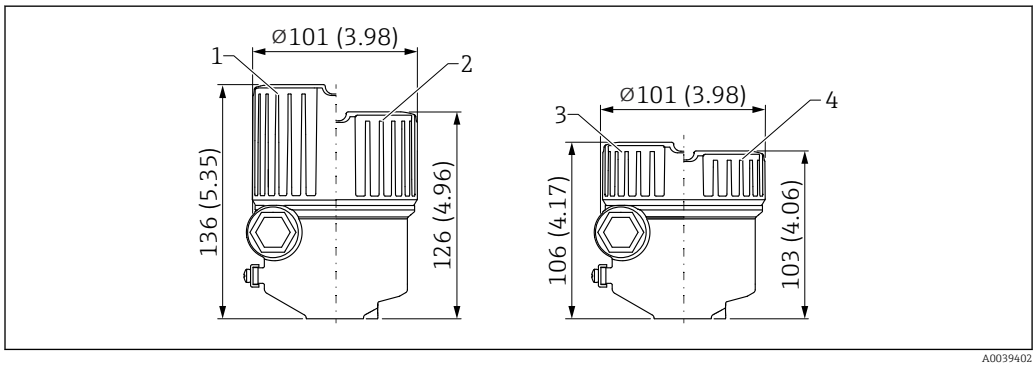

34 Dimensions of single-compartment housing, aluminum, coated. Unit of measurement mm (in)

1 *Height with cover including sight glass made of glass for Ex ec approval*
2 *Height with cover including sight glass made of plastic*
3 *Height with cover including sight glass made of plastic (optional)*
4 *Height with cover without sight glass*

Single compartment housing, aluminum, coated (Ex d/XP, dust ignition-proof)

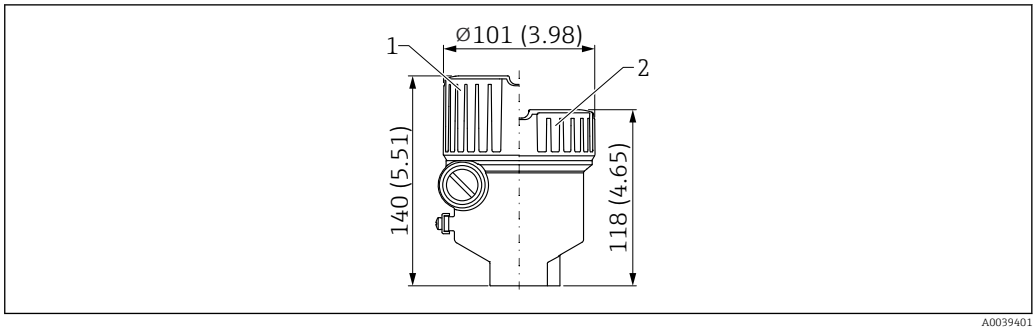

35 Dimensions of single compartment housing, aluminum, coated; with Ex d/XP, dust ignition-proof. Unit of measurement mm (in)

1 Height with cover with sight glass made of glass
2 Height with cover without sight glass

Single compartment housing, 316L

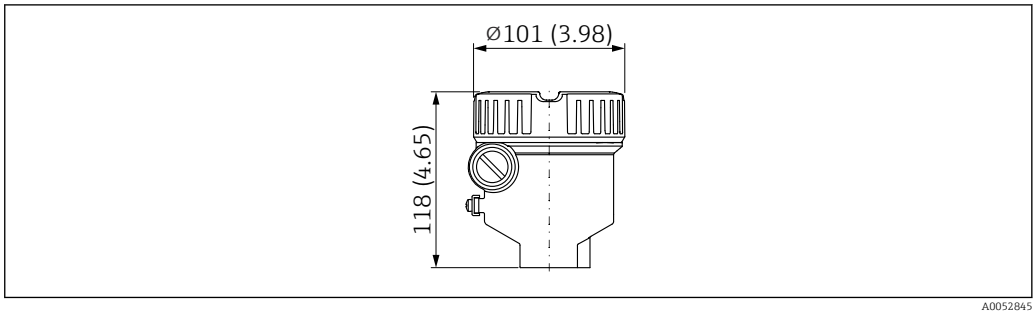

36 Dimensions of single compartment 316L housing; with Ex d/XP also, dust ignition-proof; cover without sight glass. Unit of measurement mm (in)

Single-compartment housing, 316L, hygienic

For use in hazardous areas with a certain type of protection, the ground terminal on the outside of the housing is required.

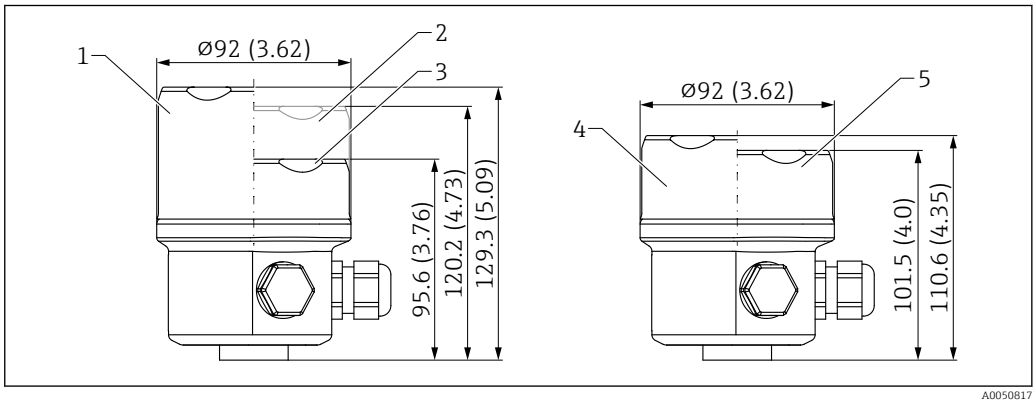

37 Dimensions of single-compartment housing, 316L, hygienic. Unit of measurement mm (in)

1 Height with cover including sight glass made of glass
2 Height with cover including sight glass made of plastic
3 Height with cover without sight glass
4 Height with cover including sight glass made of glass (optional)
5 Height with cover including sight glass made of plastic (optional)

Dual compartment housing, L-shaped, aluminum, coated

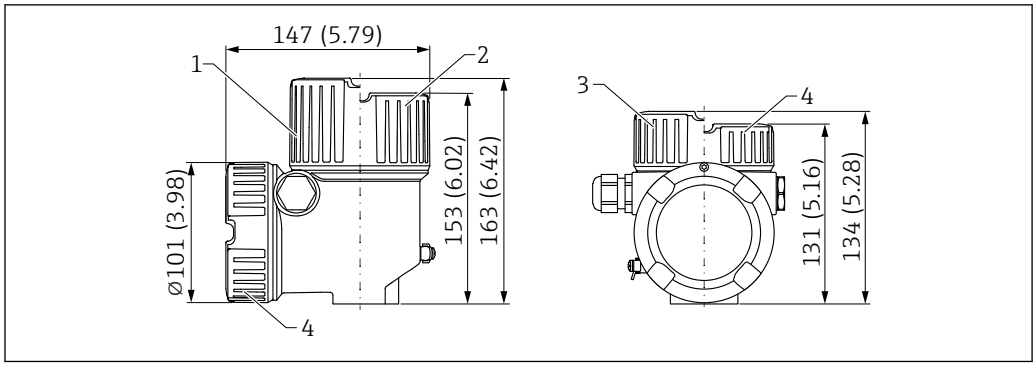

38 Dimensions of dual compartment housing, L-shaped, aluminum, coated; also with Ex d/XP, dust ignition-proof. Unit of measurement mm (in)

1 Height with cover with sight glass made of glass
2 Height with cover with plastic sight glass
3 Height with cover with plastic sight glass (optional)
4 Height with cover without sight glass

Ground terminal

- Ground terminal inside the housing, max. conductor cross-section 2.5 mm^2 (14 AWG)
- Ground terminal outside on the housing, max. conductor cross-section 4 mm^2 (12 AWG)

Cable glands

Cable diameter:
- Plastic: Ø5 to 10 mm (0.2 to 0.38 in)
- Nickel-plated brass: Ø7 to 10.5 mm (0.28 to 0.41 in)
- Stainless steel: Ø7 to 12 mm (0.28 to 0.47 in)

The scope of delivery comprises:
- 1 cable gland installed
- 1 cable gland sealed with dummy plug

A second cable gland (not mounted) is also included in the scope of delivery of the relay electronics.

Exceptions: For Ex d/XP, dust ignition-proof, only threaded insertions are permitted.

Temperature spacer, pressure-tight feedthrough (optional)

Provides sealed insulation for the vessel and a normal ambient temperature for the housing.

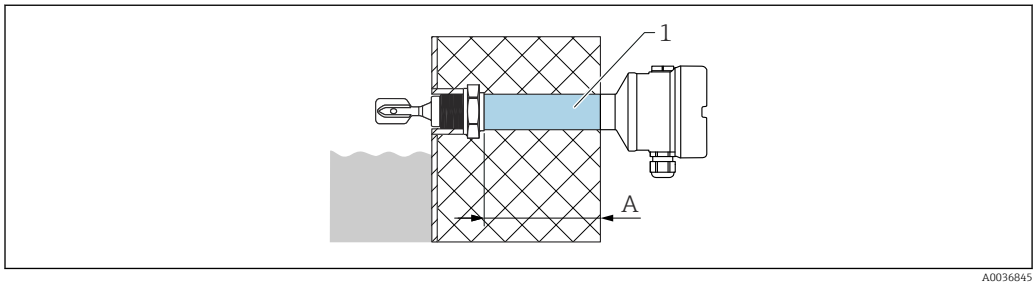

1 Temperature spacer and/or pressure-tight feedthrough with maximum insulation length
A Approx. 140 mm (5.51 in)

Dimension A depends on the process connection selected and can therefore vary. For exact dimensions, information is available from the Endress+Hauser sales office.

Product Configurator, feature "Sensor design":
- Temperature spacer
- Pressure-tight feedthrough (second line of defense)
  If the sensor is damaged, this protects the housing from vessel pressures up to 100 bar (1 450 psi).

The "Pressure-tight feedthrough" version can only be selected in conjunction with the "Temperature spacer" option.

Ex d glass feedthrough for pipe extensions

If a pipe extension is required in combination with an Ex d approval, the following design is used:

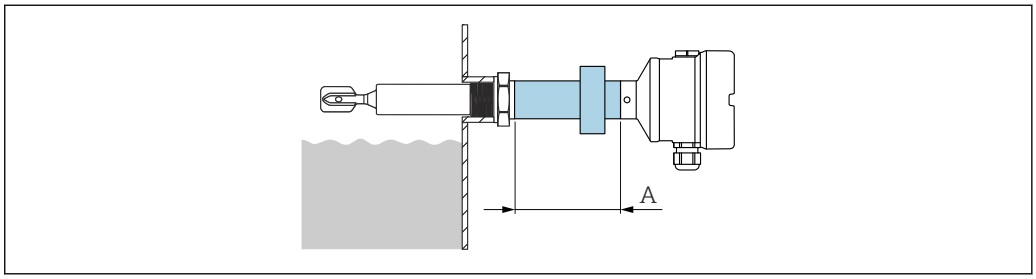

A0046136

39 Ex d glass feedthrough for pipe extensions

A Approx. 76 mm (2.99 in)

Dimension A depends on the process connection selected and can therefore vary. For exact dimensions, information is available from the Endress+Hauser sales office.

Probe design

Compact version

Sensor length L: depends on process connection

For further details, see the "Process connections" section.

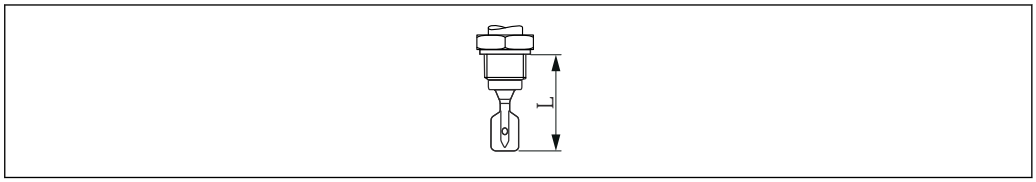

A0042435

40 Probe design: compact version, sensor length L

Short pipe version

Sensor length L: depends on process connection
- Flange approx. 115 mm (4.53 in)
- Thread G ¾ approx. 115 mm (4.53 in)
- Thread G 1 approx. 118 mm (4.65 in)
- Thread NPT, R approx. 99 mm (3.9 in)
- Tri-Clamp approx. 115 mm (4.53 in)
- Flush mount 1" (G 1 welding boss from Endress+Hauser): approx. 104 mm (4.09 in)

Pipe extension

- Sensor lengths L: 117 to 6 000 mm or 4.61 to 236.22 in (material: 316 L)
- Sensor lengths L: 148 to 3 000 mm or 5.83 to 118.11 in (material: Alloy C)
- Length tolerances L:
  - < 1 m (3.3 ft) = −5 mm (−0.2 in)
  - 1 to 3 m (3.3 to 9.8 ft) = −10 mm (−0.39 in)
  - 3 to 6 m (9.8 to 20 ft) = −20 mm (−0.79 in)

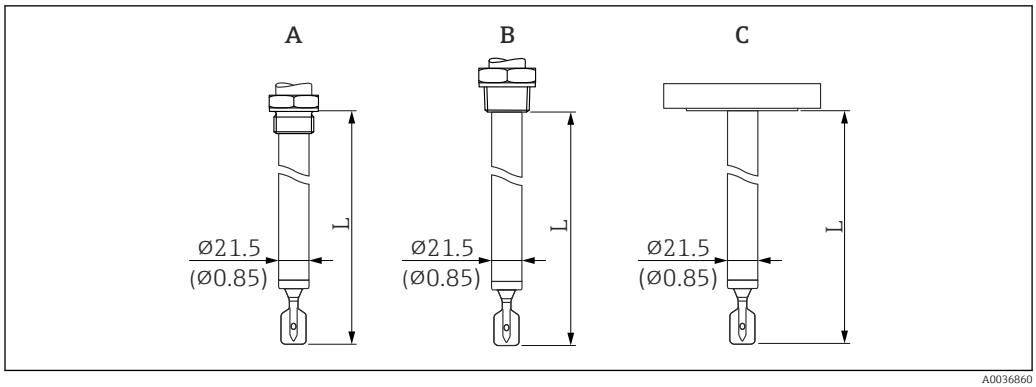

41 Probe designs: pipe extension, short pipe version (sensor length L). Unit of measurement mm (in)

A G ¾, G 1
B NPT ¾, NPT 1, R ¾, R 1
C Flange, clamp/Tri-Clamp

Tuning fork

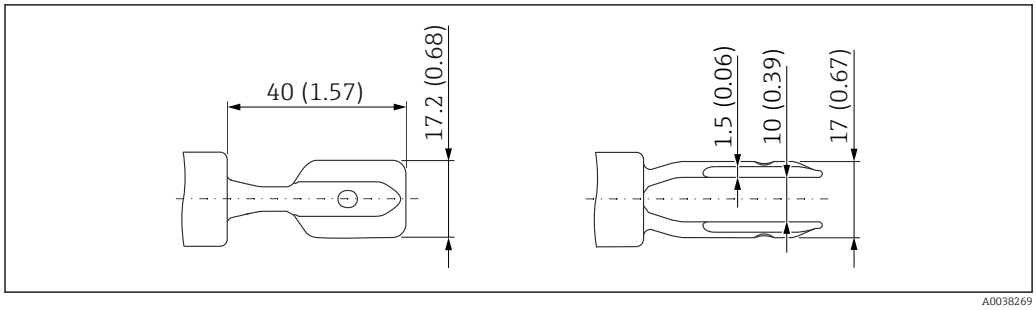

42 Tuning fork. Unit of measurement mm (in)

Process connections

Process connection, sealing surface

- Thread ISO 228, G
- Thread ASME B1.20.01, NPT
- Thread EN 10226, R
- Clamp/Tri-Clamp

- Flange ASME B16.5, RF (Raised Face)
- Flange ASME B16.5, FF (Flat Face)
- Flange ASME B16.5, RTJ (Ring Type Joint)
- Flange EN 1092-1, Form A
- Flange EN 1092-1, Form B1
- Flange EN 1092-1, Form C
- Flange EN 1092-1, Form D
- Flange EN 1092-1, Form E
- Flange JIS B2220, RF (Raised Face)

Height of process connection

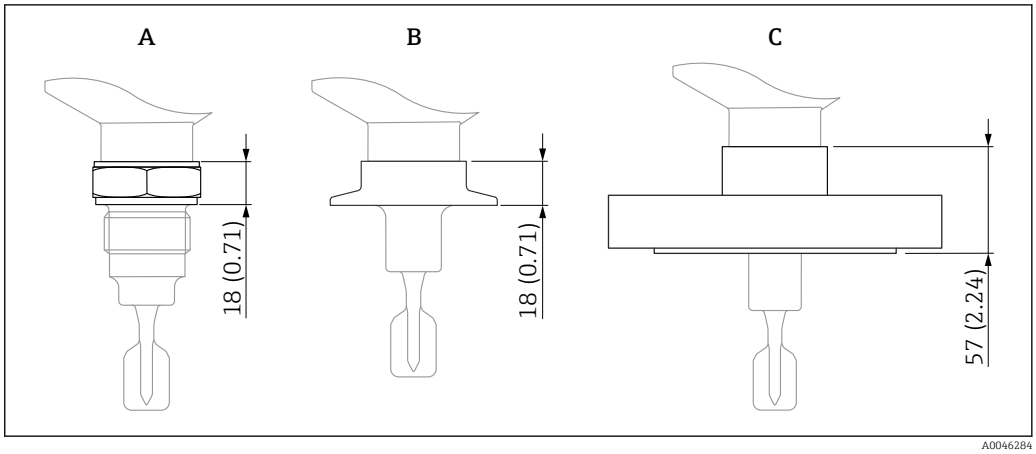

43 *Maximum height specification for the process connections. Unit of measurement mm (in)*

A Process connection with threaded connection
B Process connection with clamp/Tri-Clamp
C Process connection with flange

Thread ISO228 G for installing in weld-in adapter

G ¾, G 1 suitable for installation in weld-in adapter
- Pressure rating, temperature: ≤ 40 bar (580 psi), ≤ 100 °C (212 °F)
- Pressure rating, temperature: ≤ 25 bar (363 psi), ≤ 150 °C (302 °F)
- Weight G ¾: 0.2 kg (0.44 lb)
- Weight G 1: 0.33 kg (0.73 lb)
- Accessory: weld-in adapter

The weld-in adapter is not included in the scope of delivery. Optionally ordered as “accessory enclosed".

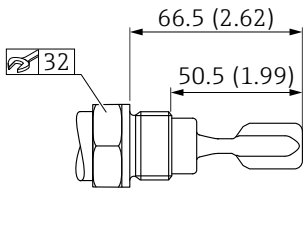

44 *ISO 228 G ¾ thread. Unit of measurement mm (in)*

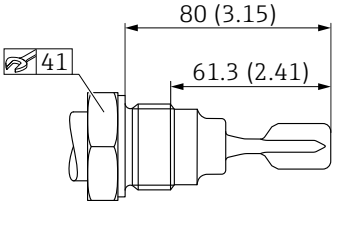

45 *ISO 228 G 1 thread. Unit of measurement mm (in)*

Thread ISO228 G with flat seal

G ¾, G 1
- Pressure rating: ≤ 100 bar (1 450 psi)
- Temperature: ≤ 150 °C (302 °F)
- Weight G ¾: 0.2 kg (0.44 lb)
- Weight G 1: 0.33 kg (0.73 lb)

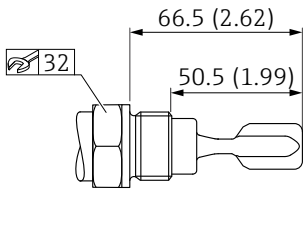

46 *Thread ISO228 G ¾. Unit of measurement mm (in)*

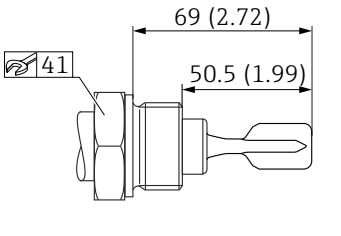

47 *Thread ISO228 G 1. Unit of measurement mm (in)*

Thread ASME B1.20.1, NPT

- Pressure rating: ≤ 100 bar (1 450 psi)
- Temperature: ≤ 150 °C (302 °F)
- Weight: 0.3 kg (0.66 lb)

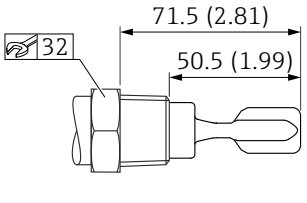

48 *Thread ASME B1.20.1, NPT ¾. Unit of measurement mm (in)*

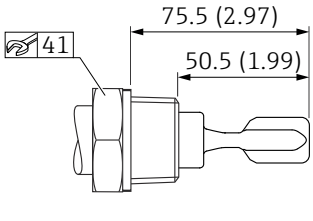

49 *Thread ASME B1.20.1, NPT 1. Unit of measurement mm (in)*

Thread EN10226, R

- Pressure rating: ≤ 100 bar (1 450 psi)
- Temperature: ≤ 150 °C (302 °F)
- Weight: 0.3 kg (0.66 lb)

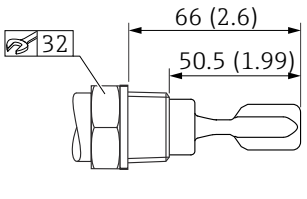

50 *Thread EN10226, R ¾. Unit of measurement mm (in)*

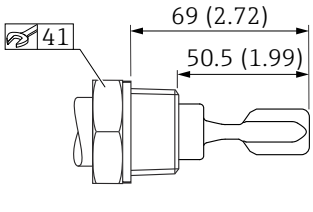

51 *Thread EN10226, R 1. Unit of measurement mm (in)*

Tri-Clamp

ISO2852 DN25-38 (1 to 1 ½"), DIN32676 DN25-40
- Pressure rating: ≤ 25 bar (363 psi)
- Temperature: ≤ 150 °C (302 °F)
- Weight: 0.22 kg (0.49 lb)

ISO2852 DN40-51 (2"), DIN32676 DN50
- Pressure rating: ≤ 25 bar (363 psi)
- Temperature: ≤ 150 °C (302 °F)
- Weight: 0.3 kg (0.66 lb)

The maximum temperature and the maximum pressure are dependent on the clamping ring and the seal used. The lowest value applies in each case.

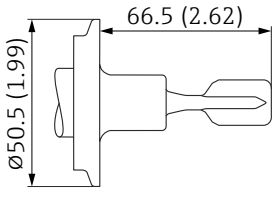

52 *Tri-Clamp 1 to 1 ½". Unit of measurement mm (in)*

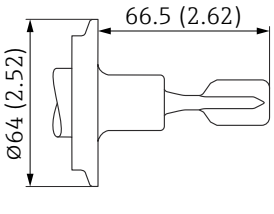

53 *Tri-Clamp 2". Unit of measurement mm (in)*

Flanges

Alloy C22-plated flanges are available for higher chemical resistance. The flange carrier material is made of 316L and is welded to an Alloy C22 disk.

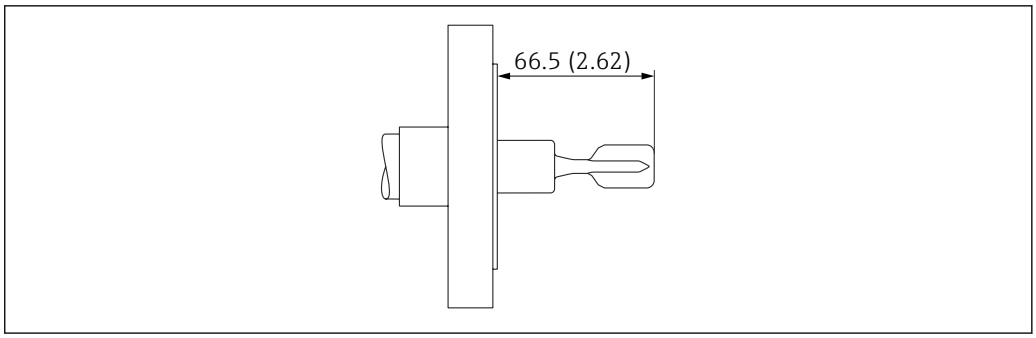

54 *Sample illustration. Unit of measurement mm (in)*

The raised face is smaller than described in the standard. However, a standard seal can be used.

ASME B16.5 flanges, RF

Pressure rating	Type	Material	Weight
Cl.150	NPS 1"	316/316L	1.0 kg (2.21 lb)
Cl.150	NPS 1-¼"	316/316L	1.2 kg (2.65 lb)
Cl.150	NPS 1-½"	316/316L	1.5 kg (3.31 lb)
Cl.150	NPS 2"	316/316L	2.4 kg (5.29 lb)
Cl.150	NPS 2"	Alloy C22>316/316L	2.4 kg (5.29 lb)
Cl.150	NPS 3"	316/316L	4.9 kg (10.8 lb)
Cl.150	NPS 4"	316/316L	7.0 kg (15.44 lb)
Cl.300	NPS 1"	316/316L	1.5 kg (3.31 lb)
Cl.300	NPS 1-¼"	316/316L	2.0 kg (4.41 lb)
Cl.300	NPS 1-½"	316/316L	2.7 kg (5.95 lb)
Cl.300	NPS 2"	316/316L	3.2 kg (7.06 lb)
Cl.300	NPS 3"	316/316L	6.8 kg (14.99 lb)
Cl.300	NPS 3"	Alloy C22>316/316L	6.8 kg (14.99 lb)
Cl.300	NPS 4"	316/316L	11.5 kg (25.6 lb)
Cl.600	NPS 2"	316/316L	4.2 kg (9.26 lb)
Cl.600	NPS 3"	316/316L	6.8 kg (14.99 lb)

ASME B16.5 flanges, FF

Pressure rating	Type	Material	Weight
Cl.150	NPS 1"	316/316L	1.0 kg (2.21 lb)
Cl.150	NPS 2"	316/316L	2.4 kg (5.29 lb)
Cl.300	NPS 1-½"	316/316L	2.7 kg (5.95 lb)
Cl.300	NPS 2"	316/316L	3.2 kg (7.06 lb)

ASME B16.5 flanges, RTJ

Pressure rating	Type	Material	Weight
Cl.300	NPS 2"	316/316L	3.2 kg (7.06 lb)
Cl.300	NPS 3"	316/316L	7.2 kg (15.88 lb)

Pressure rating	Type	Material	Weight
Cl.300	NPS 4"	316/316L	11.5 kg (25.6 lb)
Cl.600	NPS 2"	316/316L	4.2 kg (9.26 lb)

EN flanges EN 1092-1, A

Pressure rating	Type	Material	Weight
PN6	DN32	316L (1.4404)	1.2 kg (2.65 lb)
PN6	DN40	316L (1.4404)	1.4 kg (3.09 lb)
PN6	DN50	316L (1.4404)	1.6 kg (3.53 lb)
PN10/16	DN50	316L (1.4404)	2.9 kg (6.39 lb)
PN10/16	DN80	316L (1.4404)	4.8 kg (10.58 lb)
PN10/16	DN100	316L (1.4404)	5.6 kg (12.35 lb)
PN25/40	DN25	316L (1.4404)	1.3 kg (2.87 lb)
PN25/40	DN32	316L (1.4404)	2.0 kg (4.41 lb)
PN25/40	DN40	316L (1.4404)	2.4 kg (5.29 lb)
PN25/40	DN50	316L (1.4404)	3.2 kg (7.06 lb)
PN25/40	DN65	316L (1.4404)	4.3 kg (9.48 lb)
PN25/40	DN80	316L (1.4404)	5.9 kg (13.01 lb)
PN25/40	DN100	316L (1.4404)	7.5 kg (16.54 lb)
PN100	DN50	316L (1.4404)	5.5 kg (12.13 lb)

EN flanges EN 1092-1, B1

Pressure rating	Type	Material	Weight
PN6	DN32	316L (1.4404)	1.2 kg (2.65 lb)
PN6	DN50	316L (1.4404)	1.6 kg (3.53 lb)
PN6	DN50	Alloy C22>316L	1.6 kg (3.53 lb)
PN10/16	DN50	316L (1.4404)	2.7 kg (6.02 lb)
PN10/16	DN100	316L (1.4404)	5.6 kg (12.35 lb)
PN10/16	DN100	Alloy C22>316L	5.6 kg (12.35 lb)
PN25/40	DN25	316L (1.4404)	1.4 kg (3.09 lb)
PN25/40	DN25	Alloy C22>316L	1.4 kg (3.09 lb)
PN25/40	DN40	316L (1.4404)	1.3 kg (2.93 lb)
PN25/40	DN50	316L (1.4404)	3.2 kg (7.06 lb)
PN25/40	DN50	Alloy C22>316L	3.2 kg (7.06 lb)
PN25/40	DN80	316L (1.4404)	5.9 kg (13.01 lb)
PN25/40	DN80	Alloy C22>316L	5.2 kg (11.47 lb)
PN100	DN50	316L (1.4404)	5.5 kg (12.13 lb)

EN flanges EN 1092-1, C

Pressure rating	Type	Material	Weight
PN25/40	DN50	316L (1.4404)	3.2 kg (7.06 lb)

EN flanges EN 1092-1, D

Pressure rating	Type	Material	Weight
PN25/40	DN50	316L (1.4404)	3.2 kg (7.06 lb)

EN flanges EN 1092-1, E

Pressure rating	Type	Material	Weight
PN25/40	DN50	316L (1.4404)	3.2 kg (7.06 lb)

JIS flanges B2220

Pressure rating	Type	Material	Weight
10K	10K 25A	316L (1.4404)	1.3 kg (2.87 lb)
10K	10K 40A	316L (1.4404)	1.5 kg (3.31 lb)
10K	10K 50A	316L (1.4404)	1.7 kg (3.75 lb)
10K	10K 50A	AlloyC22>316L	1.7 kg (3.75 lb)
10K	10K 80A	316L (1.4404)	2.2 kg (4.85 lb)
10K	10K 100A	316L (1.4404)	2.8 kg (6.17 lb)

Weight

Basic weight: 0.65 kg (1.43 lb)
The basic weight comprises:
- Probe design: compact version
- Electronic insert
- Housing: single compartment, plastic with cover
- Thread, G ¾

Differences in weight result from the housing, LED or Bluetooth module (incl. tall cover).

Bluetooth module
0.1 kg (0.22 lb)

LED module
0.1 kg (0.22 lb)

Housing
- Single compartment; aluminum, coated: 0.8 kg (1.76 lb)
  optional LED module or Bluetooth module with a tall cover: 0.38 kg (0.84 lb)
- Single compartment; 316L: 2.1 kg (4.63 lb)
- Single compartment; 316L, hygienic: 0.45 kg (0.99 lb)
  optional LED module or Bluetooth module with a tall cover: 0.38 kg (0.84 lb)
- Dual compartment, L-shaped; aluminum, coated: 1.22 kg (2.69 lb)
  optional LED module or Bluetooth module with a tall cover: 0.38 kg (0.84 lb)

Temperature spacer
0.6 kg (1.32 lb)

Pressure-tight feedthrough
0.7 kg (1.54 lb)

Pipe extension
- 1000 mm: 0.9 kg (1.98 lb)
- 50 in: 1.15 kg (2.54 lb)

Process connection

See "Process connections" section

Protective cover, plastic
0.2 kg (0.44 lb)

Protective cover, 316L
0.93 kg (2.05 lb)

Materials

Materials in contact with process

Process connection and pipe extension

316L (1.4404 or 1.4435)
Optional Alloy C22 (2.4602)

Tuning fork

316L (1.4435)
Optional Alloy C22 (2.4602)

Flanges

- Flanges, process connections
- Flange plating: Alloy C22 (2.4602)

Seals

Flat seal for process connection G ¾ or G 1: fiber-reinforced elastomer seal, asbestos-free according to DIN 7603

Scope of delivery with flat seal according to DIN7603
- Metric thread G ¾, G 1 standard
- Metric thread G ¾, G 1 for installation in weld-in adapter

Scope of delivery without seal
- Tri-Clamp
- Flanges
- R and NPT thread

Materials not in contact with process

Plastic housing

- Housing: PBT/PC
- Dummy cover: PBT/PC
- Transparent cover: PA12
- Cover with sight glass: PBT/PC and PC
- Cover seal: EPDM
- Potential equalization: 316L
- Seal under potential equalization: EPDM
- Plug: PBT-GF30-FR
- M20 cable gland: PA
- Seal on plug and cable gland: EPDM
- Threaded adapter as substitute for cable glands: PA66-GF30
- Nameplate: plastic foil
- TAG plate: plastic foil, metal or provided by customer

Aluminum housing, coated

- Housing: aluminum EN AC 43400
- Dummy cover: aluminum EN AC 43400
- Cover with sight glass: aluminum EN AC 43400, PC Lexan 943A synthetic glass
  - Cover with polycarbonate sight glass, optionally available to order
  - In the case of Ex d, the sight glass is made of borosilicate
- Cover seal materials: HNBR
- Cover seal materials: FVMQ (only for low temperature version)
- Plug: aluminum
  Plastic (PBT-GF30-FR) in Ex-free, Ex i or IS combination with cable gland, plastic, M20 thread or G ½ thread
- Nameplate: plastic foil
- TAG plate: plastic foil, stainless steel or provided by the customer
- M20 cable glands: select material (stainless steel, nickel-plated brass, polyamide)

Stainless steel housing, 316L

- Housing: stainless steel AISI 316L (1.4409)
  Stainless steel (ASTM A351 : CF3M (cast equivalent to AISI 316L material)/DIN EN 10213 : 1.4409)
- Dummy cover: stainless steel AISI 316L (1.4409)
- Plug: stainless steel
- Cover seal materials: FVMQ (only for low temperature version)
- Cover seal materials: HNBR
- Nameplate: stainless steel housing labeled directly
- TAG plate: plastic foil, stainless steel or provided by the customer
- M20 cable glands: select material (stainless steel, nickel-plated brass, polyamide)

Stainless steel housing, 316L, hygienic

- Housing: stainless steel AISI 316L (1.4404)
- Dummy cover: stainless steel AISI 316L (1.4404)
- Cover with polycarbonate sight glass optionally available. For dust ignition-proof applications, the sight glass is made of borosilicate.
- Cover seal materials: VMQ
- Plug: stainless steel or plastic
  - Plastic (PBT-GF30-FR) in Ex-free, Ex i or IS combination with cable gland, plastic, M20 thread or G ½ thread
  - Stainless steel for cable glands made of stainless steel or nickel or for Ex t, Ex ia IIIC
- Nameplate: stainless steel housing labeled directly
- TAG plate: plastic foil, stainless steel or provided by the customer
- M20 cable glands: select material (stainless steel, nickel-plated brass, polyamide)

Wired-on nameplate

- Stainless steel
- Plastic film
- Provided by customer
- RFID tag: polyurethane potting compound

Electrical connection

Coupling M20, plastic
- Material: PA
- Seal on cable gland: EPDM
- Dummy plug: plastic

Coupling M20, nickel-plated brass
- Material: nickel-plated brass
- Seal on cable gland: EPDM
- Dummy plug: plastic

Coupling M20, 316L
- Material: 316L
- Seal on cable gland: EPDM
- Dummy plug: plastic

M20 thread
The device is supplied with M20 thread as standard.
Transport plug: LD-PE

Thread G ½
The device is supplied as standard with an M20 thread and an enclosed adapter to G ½ including documentation (aluminum housing, 316L housing, hygienic housing) or with a mounted adapter to G ½ (plastic housing).
- Adapter made of PA66-GF or aluminum or 316L (depends on housing version ordered)
- Transport plug: LD-PE

NPT ½ thread
The device is supplied as standard with an NPT ½ thread (aluminum housing, 316L housing) or with a mounted adapter to NPT ½ (plastic housing, hygienic housing).
- Adapter made of PA66-GF or 316L (depends on housing version ordered)
- Transport plug: LD-PE

Thread NPT ¾
The device is supplied with NPT ¾ thread as standard.
Transport plug: LD-PE

Surface roughness

The surface roughness of the surface in contact with the process is Ra ≤3.2 µm (126 µin).

Operability

Operation concept

- Operation with button and DIP switches on the electronic insert
- Display with optional Bluetooth® module and SmartBlue app via Bluetooth® wireless technology
- Indication of the operational status (switch status or alarm status) with optional LED module (signal lights visible from the outside)
  Observe approvals for plastic housing, aluminum housing and stainless steel housing in hygienic applications (combined with DC PNP (electronic insert FEL62) and relay electronics (electronic inserts FEL64, FEL64DC)

Local operation

Elements on the electronic insert

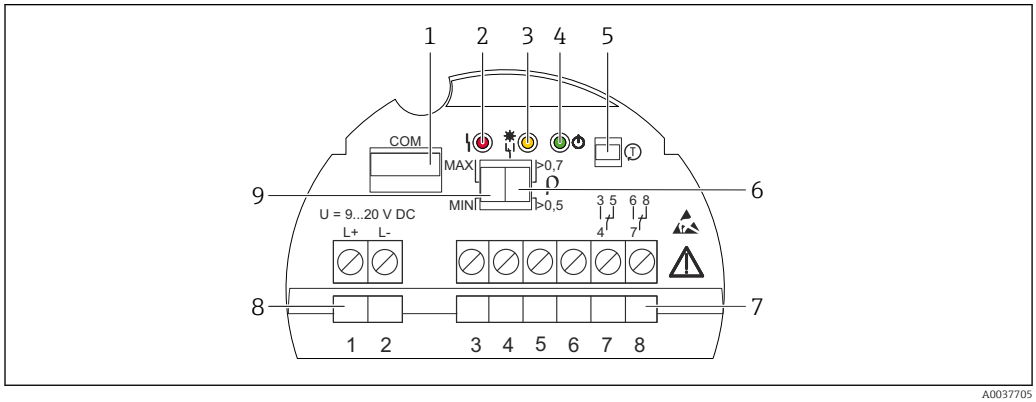

55 *Example of electronic insert FEL64DC*

1 *COM interface for additional modules (LED module, Bluetooth® module)*
2 *Red LED, for warning or alarm*
3 *Yellow LED, for switch status*
4 *Green LED, for operational status (device on)*
5 *Test button, for activating function test*
6 *DIP switch, for setting density 0.7 or 0.5*
7 *Terminals (3 to 8), for relay contact*
8 *Terminals (1 to 2), for power supply*
9 *DIP switch, for configuring MAX/MIN safety mode*

Operation at electronic insert

MAX/MIN safety mode

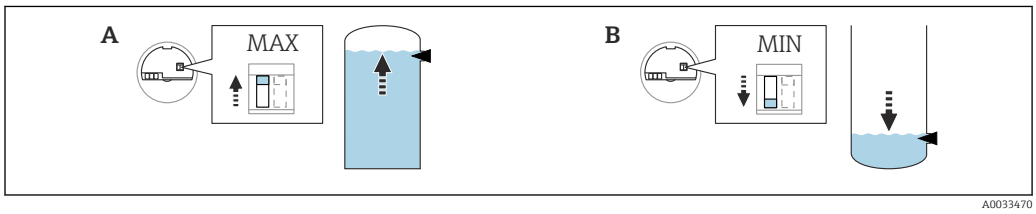

56 *Switch position on the electronic insert for MAX/MIN safety mode*

A *MAX (maximum safety mode), as-delivered state*
B *MIN (minimum safety mode)*

- Minimum/maximum quiescent current safety can be switched at the electronic insert
- MAX = maximum safety: When the vibrating fork is covered, the output switches to demand mode, e.g. use for the overfill protection system
- MIN = minimum safety: When the vibrating fork is uncovered, the output switches to demand mode, e.g. use to prevent pumps from running dry

Density switchover

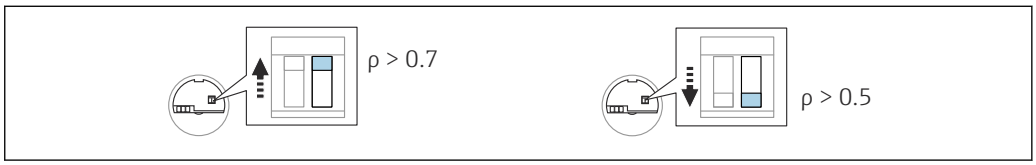

57 Switch position on the electronic insert for density

Liquids with density > 0.7 g/cm³ (43.7 lb/ft³)
Switch position > 0.7 g/cm³ (43.7 lb/ft³), as-delivered state

Liquids with density > 0.5 g/cm³ (31.2 lb/ft³)
Switch position > 0.5 g/cm³ (31.2 lb/ft³), can be configured via DIP switch

Liquids with density > 0.4 g/cm³ (25.0 lb/ft³)
- Optionally available to order
- SIL for defined media and process parameters on request
- Fixed value that cannot be changed
  The function of the DIP switch is interrupted

Functional test of the electronic switch with a test magnet

The functional test with the test magnet can be performed without opening the device. To perform the test, hold the test magnet against the marking on the nameplate of the housing. The functional test with the test magnet acts in the same way as the functional test using the test button on the electronic insert.

The functional test can be applied for the following electronic inserts: FEL62, FEL64, FEL64DC, FEL68.

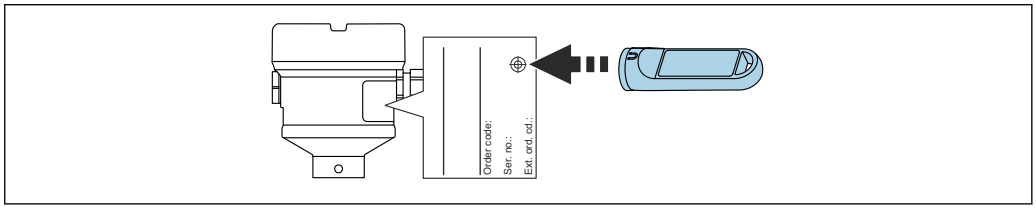

58 Functional test with test magnet

Product Configurator: the test magnet is optionally available.

Local display

LED module VU120 (optional)

A brightly lit LED indicates the operational status (switch status or alarm status). The LED module can be connected to the following electronic inserts: FEL62, FEL64, FEL64DC.

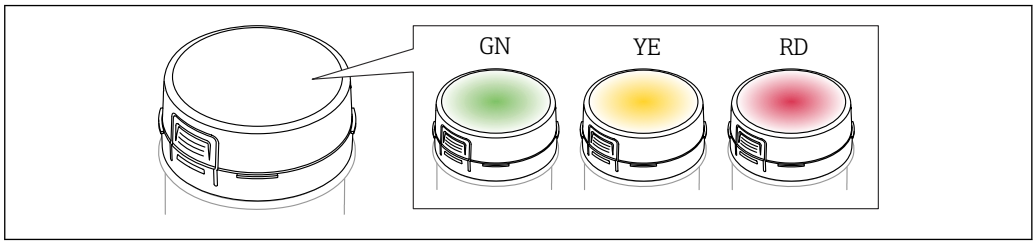

59 LED module, the LED lights up in green (GN), yellow (YE) or red (RD)

Additional information → 18 and in the "Accessories" section

Remote operation

Heartbeat diagnostics and verification with Bluetooth® wireless technology

Access via Bluetooth® wireless technology

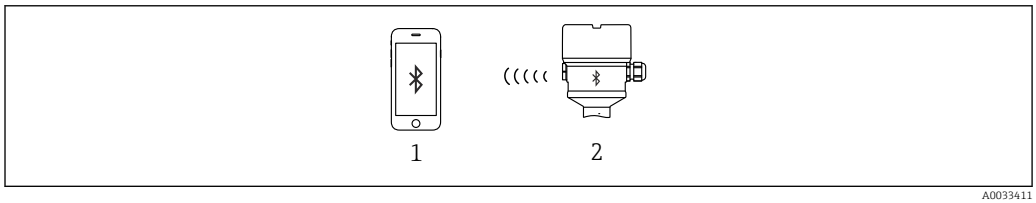

60 Remote operation via Bluetooth® wireless technology

1 Smartphone or tablet with SmartBlue app
2 Device with optional Bluetooth® module

Bluetooth module VU121 (optional)

Functions

- Connection via COM interface: Bluetooth® module for device diagnostics via a smartphone app or tablet app
- Indication of the battery status via app when used with electronic insert FEL68 (NAMUR)
- Guidance via the **SIL/WHG Prooftest** wizard
- visible in the live list 10 s after the Bluetooth® search commences
- Data can be read out of the Bluetooth® module 60 s after the supply voltage is switched on
- Display of the current oscillation frequency and the switch status of the device

The yellow LED flashes when the Bluetooth® module is connected to another Bluetooth® device, e.g. cell phone.

Heartbeat Technology

Additional information in the "Application packages" section.

Diagnostic information

Heartbeat Technology

The electronics module and the tuning fork are checked using Heartbeat Technology, and a verification of the Liquiphant is performed. The switch output is not changed during this test. The test can be performed at any time and does not influence the switch output in the safety circuit. In the case of proof-testing, the SmartBlue app supports users in every step of the test. The switch output is also switched during this test. During the proof-test, alternative monitoring measures must be taken to ensure process safety.

Proof testing

During the proof test, the SmartBlue app provides support for each individual stage of the test (proof-test wizard). The switch output is also switched during this test. During the proof test, alternative monitoring measures must be taken to ensure process safety.

Evaluation of the vibration frequency

If the vibration frequency exceeds the upper warning frequency, a warning is displayed. A warning is activated when the fork becomes corroded, for example. The switch output remains in the current state. The warning is displayed in the SmartBlue app and output in the Heartbeat Technology protocol. When a warning occurs, it is necessary to check the Liquiphant sensor.

The current oscillation frequency must be in the range between the upper and lower alarm frequency. If the current oscillation frequency is above the upper alarm frequency or below the lower alarm frequency, an alarm is output. The output switches to the safety-oriented state.

Certificates and approvals

Current certificates and approvals for the product are available at www.endress.com on the relevant product page:

1. Select the product using the filters and search field.
2. Open the product page.
3. Select **Downloads**.

CE mark

The measuring system meets the legal requirements of the applicable EU Directives. These are listed in the corresponding EU Declaration of Conformity together with the standards applied. Endress +Hauser confirms successful testing of the device by affixing to it the CE mark.

RCM marking

The supplied product or measuring system meets the ACMA (Australian Communications and Media Authority) requirements for network integrity, interoperability, performance characteristics as well as health and safety regulations. Here, especially the regulatory arrangements for electromagnetic compatibility are met. The products bear the RCM marking on the nameplate.

A0029561

Ex approval

All data relating to explosion protection is provided in separate Ex documentation and is available from the Downloads Area. The Ex documentation is supplied as standard with all devices approved for use in explosion hazardous areas.

Ex temperature class: T1 to T6

If using the Ex i type of protection and electronic insert FEL68 (NAMUR) and also the Bluetooth module (battery required): T4 to T1.

Explosion-protected smartphones and tablets

If used in hazardous areas, mobile devices with an Ex approval must be used.

Corrosion test

Standards and test methods:
- 316L: ASTM A262 Practice E and ISO 3651-2 Method A
- Alloy C22 and Alloy C276: ASTM G28 Practice A and ISO 3651-2 Method C
- 22Cr duplex, 25Cr duplex: ASTM G48 Practice A or ISO 17781 and ISO 3651-2 Method C

The corrosion test is confirmed for all wetted and pressure-bearing parts.

A 3.1 material certificate must be ordered as confirmation of the test.

General material compliance

Endress+Hauser guarantees compliance with all relevant laws and regulations, including the current guidelines for materials and substances.

Examples:
- RoHS
- China RoHS
- REACH
- POP VO (Stockholm Convention)

For further information and general declarations of compliance, see the Endress+Hauser website www.endress.com

Overfill protection system

Before mounting the device, observe the documentation from the WHG approvals (German Federal Water Act).

Approved for overfill protection systems and leakage detection.

Product Configurator: feature "Additional approval"

Functional safety

The device has been developed according to the IEC 61508 standard. The device is suitable for overfill protection systems and dry-run protection up to SIL 2 (SIL 3 with homogeneous redundancy).

A detailed description of the safety functions with the device, settings and functional safety data are provided in the "Functional Safety Manual" on the Endress+Hauser website: www.endress.com → Downloads.

Product Configurator: Feature "Additional approval"

Subsequent confirmation of usability according to IEC 61508 is not possible.

Marine approvals

Product Configurator: feature "Additional approval"

Radio approval

Further information and currently available documentation can be found on the Endress+Hauser website: www.endress.com → Downloads.

CRN approval

Device versions with a CRN approval (Canadian Registration Number) are listed in the corresponding registration documents. CRN-approved devices are marked with a registration number.

Any restrictions regarding the maximum process pressure values are listed on the CRN certificate.

Product Configurator: feature "Additional approval"

Pressure equipment with permitted pressure less than 200 bar, no pressure-bearing volume

Pressure instruments with a process connection that does not have a pressurized housing do not fall within the scope of the Pressure Equipment Directive, irrespective of the maximum working pressure.

If pressure equipment does not have a pressure-bearing housing, there is no pressure accessory present within the meaning of the Directive.

Druckgeräterichtlinie DGRL (PED) 2014/68/EU, Artikel 2, Absatz 5

Process seal as per ANSI/ISA 12.27.01

North American practice for the installation of process seals.

In accordance with ANSI/ISA 12.27.01, Endress+Hauser devices are designed as either single seal or dual seal devices with a warning message. This allows the user to forego the use of - and save the cost of installing - an external secondary process seal in the mating pipe as required in ANSI/NFPA 70 (NEC) and CSA 22.1 (CEC).

These instruments comply with the North American installation practice and provide a very safe and cost-saving installation for pressurized applications with hazardous fluids.

Please refer to the Safety Instructions (XA) of the relevant device for further information.

EAC conformity

The measuring system meets the legal requirements of the applicable EAC guidelines. These are listed in the corresponding EAC Declaration of Conformity along with the standards applied.

The manufacturer confirms successful testing of the device by affixing to it the EAC mark.

ASME B 31.3/31.1

Design and materials in accordance with ASME B31.3/31.1. The welds are through-penetration welded and meet the requirements of the ASME Boiler and Pressure Vessel Code, Section IX and EN ISO 15614-1.

Ordering information

Detailed ordering information is available from your nearest sales organization www.addresses.endress.com or in the Product Configurator at www.endress.com:

1. Select the product using the filters and search field.
2. Open the product page.

3. Select **Configuration**.

Product Configurator - the tool for individual product configuration
- Up-to-the-minute configuration data
- Depending on the device: direct input of information specific to the measuring point, such as the measuring range or operating language
- Automatic verification of exclusion criteria
- Automatic creation of the order code and its breakdown in PDF or Excel output format
- Ability to order directly in the Endress+Hauser Online Shop

Service

- Cleaned of oil+grease (wetted)
- PWIS-free (paint-wetting impairment substances)
  The plastic protective cover and weld-in adapters are excluded from the PWIS cleaning
- ANSI Safety Red coating, housing cover
- Switching delay setting to be spec.
- Setting for MIN safety mode
- Default density setting > 0.4 g/cm³ (25.0 lb/ft³)
- Default density setting > 0.5 g/cm³ (31.2 lb/ft³)

Test reports, declarations and inspection certificates

All test reports, declarations and inspection certificates are provided electronically in the *Device Viewer*:
Enter the serial number from the nameplate
(https://www.endress.com/de/pages/supporting-tools/device-viewer)

Product documentation on paper
Test reports, declarations and inspection certificates in hard copy can optionally be ordered with feature 570 "Service", Version I7 "Product documentation on paper". The documents are then provided with the device upon delivery.

Test, certificate, declaration

Versions can be selected for which the following certificates are available:
- Inspection certificate 3.1, EN10204 (material certificate, wetted parts)
- NACE MR0175 / ISO 15156 (wetted parts), declaration
- NACE MR0103 / ISO 17945 (wetted parts), declaration
- AD 2000 (wetted parts), declaration, excluding cast parts
- ASME B31.3 process piping, declaration
- ASME B31.1 process piping, declaration
- Pressure test, internal procedure, test report
- Helium leak test, internal procedure, test report
- PMI test, internal procedure (wetted parts), test report
- Penetrant testing AD2000-HP5-3 (PT), wetted/pressurized metallic parts, test report
- Penetrant testing ISO23277-1 (PT), wetted/pressurized metallic parts, test report
- Penetrant testing ASME VIII-1 (PT), wetted/pressurized metallic parts, test report
- Welding documentation, wetted/pressurized seams, declaration / ISO / ASME
  Welding documentation consisting of:
  - Welding drawing
  - WPQR (Welding Procedure Qualification Record) according to ISO 14613/ISO14614 or ASME Sect. IX
  - WPS (Welding Procedure Specifications)
  - WQR (Manufacturer Declaration for Welding Professionals' Qualifications)

Documentation currently available on the Endress+Hauser website: www.endress.com → Downloads or with the serial number of the device under Online Tools in the Device Viewer.

TAG

Measuring point (tag)

The device can be ordered with a tag name.

Location of tag name
Select in the additional specification:
- Stainless steel tag plate
- Paper adhesive label
- Tag provided by the customer
- RFID tag
- RFID tag + stainless steel tag plate
- RFID tag + paper adhesive label
- RFID tag + tag provided by the customer
- IEC 61406 stainless steel tag

- IEC 61406 stainless steel tag + NFC tag
- IEC 61406 stainless steel tag, stainless steel tag
- IEC 61406 stainless steel tag + NFC, stainless steel tag
- IEC 61406 stainless steel tag, plate supplied
- IEC 61406 stainless steel tag + NFC, plate supplied

Definition of tag name
Specify in the additional specification:
3 lines of maximum 18 characters each
The specified tag name appears on the selected plate and/or on the RFID tag.

Visualization in SmartBlue app
The first 32 characters of the tag name
The tag name can always be changed specifically for the measuring point via Bluetooth.

Application packages

The following versions can be optionally selected in the Product Configurator:

- Heartbeat Verification + Monitoring application package
  Can only be selected in conjunction with optional Bluetooth module
- Accessories installed: Bluetooth

The Bluetooth module for use in conjunction with the electronic insert FEL68 (2-wire NAMUR) must be ordered separately with the necessary battery.

- Application package: Heartbeat Verification + Monitoring for NAMUR output
  Can only be selected in conjunction with Bluetooth module for NAMUR output
- Accessory mounted: Bluetooth for NAMUR output

Heartbeat Technology module

Heartbeat Diagnostics
Continuously monitors and assesses the device condition and process conditions. Generates diagnostic messages when certain events occur and provides troubleshooting measures in accordance with NAMUR NE 107.

Heartbeat Verification
Performs a verification of the current device condition on demand and generates the Heartbeat Technology verification report showing the verification result.

Heartbeat Monitoring
Continuously provides device and/or process data for an external system. Analysis of this data provides a basis for process optimization and predictive maintenance.

Heartbeat Verification

The "Heartbeat Verification" module contains the **Heartbeat Verification** wizard, which verifies the current instrument health and creates the Heartbeat Technology verification report:

- The wizard can be used via the SmartBlue app.
- The wizard guides the user through the entire process for creating the verification report.
- The operating hours counter and minimum/maximum temperature indicator (peakhold) are displayed.
- In the event of an increase in the oscillation frequency of the fork, a corrosion warning will appear.
- The as-delivered state of the oscillation frequency in air is indicated on the verification report. A high oscillation frequency is an indicator of corrosion. A lower oscillation frequency indicates buildup or a sensor covered by the medium. Deviations of the oscillation frequency from the oscillation frequency in the as-delivered state can be caused by the process temperature and process pressure.

Proof testing for SIL/WHG devices

The proof test is only available for devices with SIL or WHG approval.

The "SIL Proof test" module, the "WHG Proof test" module or the "SIL/WHG Proof test" module contains an **SIL/WHG Prooftest** wizard, which must be performed at appropriate intervals in the following applications: SIL (IEC 61508/IEC 61511), WHG (German Water Resources Act (Gesetz zur Ordnung des Wasserhaushalts)):

- The wizard can be used via the SmartBlue app.
- The wizard guides the user through the entire process for creating the verification report.
- The verification report can be saved as a PDF file.

Accessories

The accessories currently available for the product can be selected at www.endress.com:

1. Select the product using the filters and search field.
2. Open the product page.
3. Select **Spare parts & Accessories**.

Test magnet

Order number: 71437508

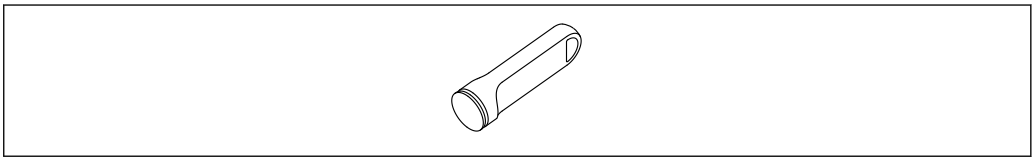

A0039209

61 Test magnet

Protective cover: 316L, XW112

The weather protection cover can be ordered together with the device via the "Accessory enclosed" product structure.

It is used to protect against direct sunlight, precipitation and ice.

The 316L protective cover is suitable for dual-compartment housings made of aluminum. The delivery includes the holder for direct mounting on the housing

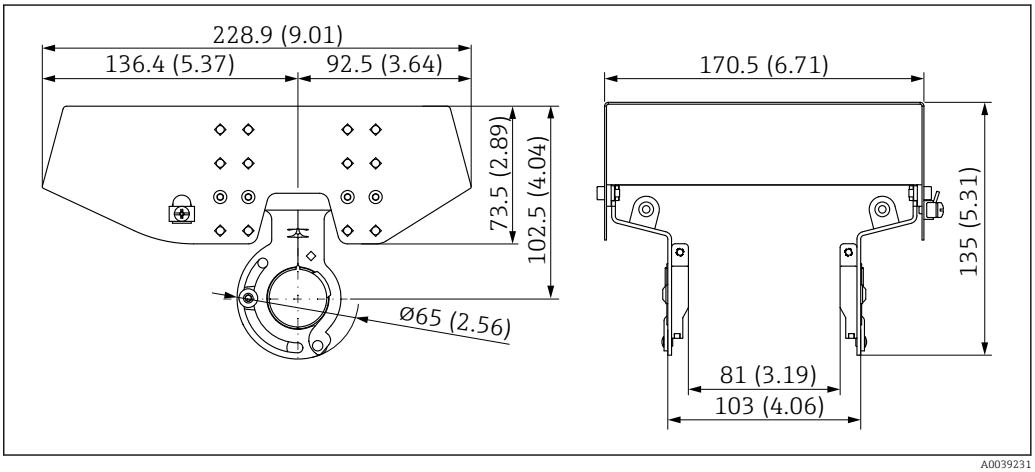

A0039231

62 Dimensions of protective cover, 316 L, XW112. Unit of measurement mm (in)

Material
- Protective cover: 316L
- Clamping screw: A4
- Holder: 316L

Accessory order code:
71438303

Special Documentation SD02424F

Protective cover, plastic, XW111

The weather protection cover can be ordered together with the device via the "Accessory enclosed" product structure.

It is used to protect against direct sunlight, precipitation and ice.

The plastic weather protection cover is suitable for single-compartment housings made of aluminum or 316L. The delivery includes the holder for direct mounting on the housing.

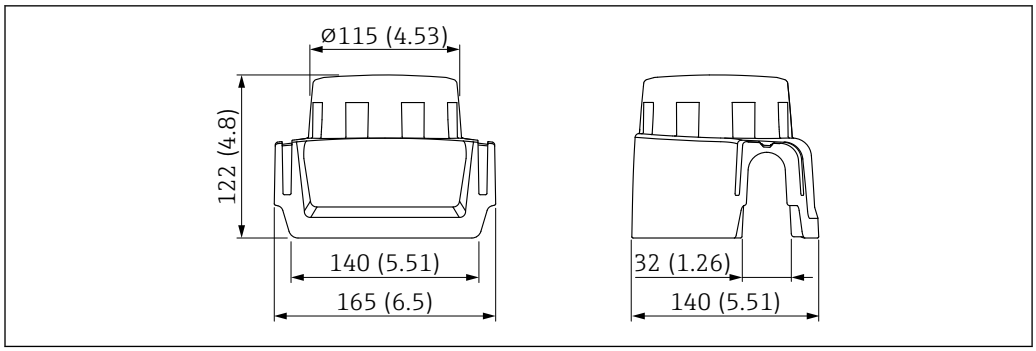

63 Dimensions of protective cover, plastic, XW111. Unit of measurement mm (in)

Material
Plastic

Accessory order code:
71438291

Special Documentation SD02423F

M12 socket

The M12 sockets listed are suitable for use in the temperature range −25 to 70 °C (−13 to 158 °F).

M12 socket IP69
- Terminated at one end
- Angled
- 5 m (16 ft) PVC cable (orange)
- Slotted nut 316L (1.4435)
- Body: PVC
- Order number: 52024216

M12 socket IP67
- Angled
- 5 m (16 ft) PVC cable (gray)
- Slotted nut Cu Sn/Ni
- Body: PUR
- Order number: 52010285

Bluetooth® module VU121 (optional)

The Bluetooth® module can be connected via the COM interface to the following electronic inserts: FEL61, FEL62, FEL64, FEL64DC, FEL67, FEL68 (2-wire NAMUR).

- Bluetooth® module without battery for use in conjunction with electronic inserts FEL61, FEL62, FEL64, FEL64DC and FEL67
  Order number: 71437383
- Bluetooth® module with battery for use in conjunction with electronic insert FEL68 (2-wire NAMUR)
  Order number: 71437381

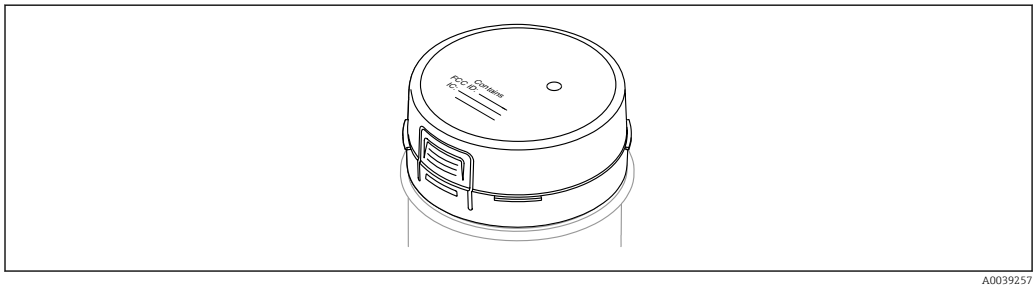

64 Bluetooth® module VU121

More detailed information and documentation are available:
- Product Configurator on the Endress+Hauser website www.endress.com
- Endress+Hauser Sales Organization www.addresses.endress.com

A tall cover is required (transparent plastic cover/cover with sight glass or aluminum cover with sight glass) when using or retrofitting the Bluetooth® module. The Bluetooth® module cannot be used in conjunction with the 316L single-compartment housing. The cover depends on the housing and approval of the device.

LED module VU120 (optional)

A brightly lit LED indicates the operational status (switch status or alarm status). The LED module can be connected to the following electronic inserts: FEL62, FEL64, FEL64DC.

Order number: 71437382

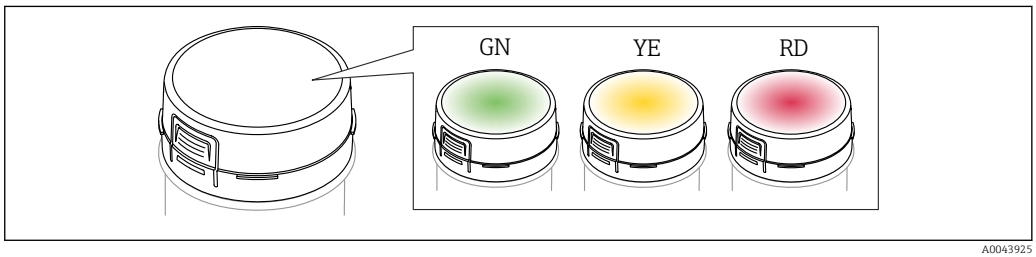

65 LED module, the LED lights up in green (GN), yellow (YE) or red (RD)

More detailed information and documentation are available:
- Product Configurator on the Endress+Hauser website www.endress.com
- Endress+Hauser sales organization www.addresses.endress.com

A tall cover is required (transparent plastic cover/cover with sight glass or aluminum cover with sight glass) for using and retrofitting the LED module. The LED module cannot be used in conjunction with the single compartment 316L housing. The cover depends on the housing and approval of the device.

Sliding sleeves for unpressurized operation

Not suitable for use in explosive atmospheres.

Switch point, infinitely adjustable.

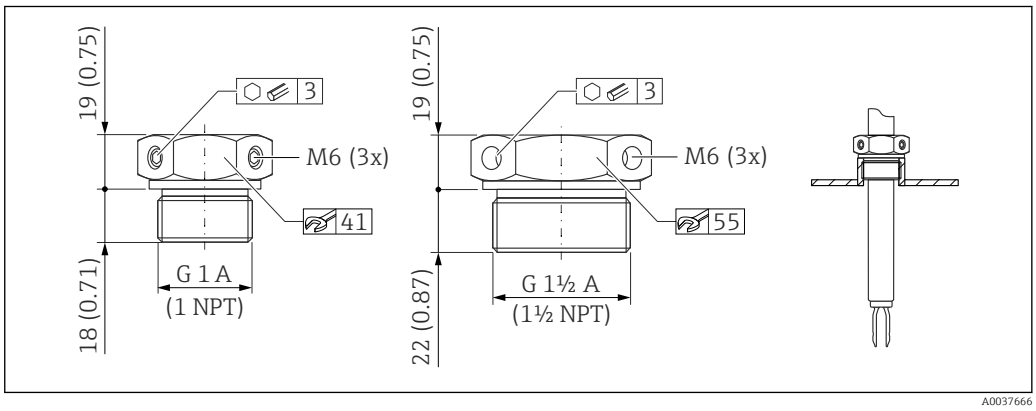

66 Sliding sleeves for unpressurized operation p_e = 0 bar (0 psi). Unit of measurement mm (in)

G 1, DIN ISO 228/I
- Material: 1.4435 (AISI 316L)
- Weight: 0.21 kg (0.46 lb)
- Order number: 52003978
- Order number: 52011888, approval: with inspection certificate EN 10204 - 3.1 material

NPT 1, ASME B 1.20.1
- Material: 1.4435 (AISI 316L)
- Weight: 0.21 kg (0.46 lb)
- Order number: 52003979
- Order number: 52011889, approval: with inspection certificate EN 10204 - 3.1 material

G 1½, DIN ISO 228/I
- Material: 1.4435 (AISI 316L)
- Weight: 0.54 kg (1.19 lb)
- Order number: 52003980
- Order number: 52011890, approval: with inspection certificate EN 10204 - 3.1 material

NPT 1½, ASME B 1.20.1
- Material: 1.4435 (AISI 316L)
- Weight: 0.54 kg (1.19 lb)
- Order number: 52003981
- Order number: 52011891, approval: with inspection certificate EN 10204 - 3.1 material

More detailed information and documentation are available:
- Product Configurator on the Endress+Hauser website www.endress.com
- Endress+Hauser Sales Organizationwww.addresses.endress.com

High pressure sliding sleeves

Suitable for use in explosive atmospheres.

- Switch point, infinitely adjustable
- Seal package made of graphite
- Graphite seal available as spare part 71078875
- For G 1, G 1½: seal is included in the delivery

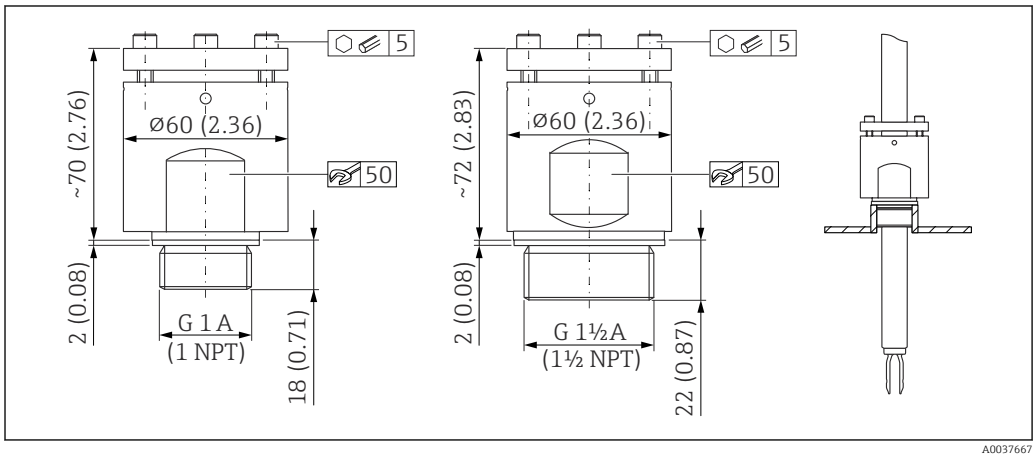

67 High pressure sliding sleeves. Unit of measurement mm (in)

G 1, DIN ISO 228/I
- Material: 1.4435 (AISI 316L)
- Weight: 1.13 kg (2.49 lb)
- Order number: 52003663
- Order number: 52011880, approval: with inspection certificate EN 10204 - 3.1 material

G 1, DIN ISO 228/I
- Material: AlloyC22
- Weight: 1.13 kg (2.49 lb)
- Approval: with inspection certificate EN 10204 - 3.1 material
- Order number: 71118691

NPT 1, ASME B 1.20.1
- Material: 1.4435 (AISI 316L)
- Weight: 1.13 kg (2.49 lb)
- Order number: 52003667
- Order number: 52011881, approval: with inspection certificate EN 10204 - 3.1 material

NPT 1, ASME B 1.20.1
- Material: AlloyC22
- Weight: 1.13 kg (2.49 lb)
- Approval: with inspection certificate EN 10204 - 3.1 material
- Order number: 71118694

G 1½, DIN ISO 228/1
- Material: 1.4435 (AISI 316L)
- Weight: 1.32 kg (2.91 lb)
- Order number: 52003665
- Order number: 52011882, approval: with inspection certificate EN 10204 - 3.1 material

G 1½, DIN ISO 228/1
- Material: AlloyC22
- Weight: 1.32 kg (2.91 lb)
- Approval: with inspection certificate EN 10204 - 3.1 material
- Order number: 71118693

NPT 1½, ASME B 1.20.1
- Material: 1.4435 (AISI 316L)
- Weight: 1.32 kg (2.91 lb)
- Order number: 52003669
- Order number: 52011883, approval: with inspection certificate EN 10204 - 3.1 material

NPT 1½, ASME B 1.20.1
- Material: AlloyC22
- Weight: 1.32 kg (2.91 lb)
- Approval: with inspection certificate EN 10204 - 3.1 material
- Order number: 71118695

More detailed information and documentation are available:
- Product Configurator on the Endress+Hauser website www.endress.com
- Endress+Hauser sales organization www.addresses.endress.com

Weld-in adapter

Various weld-in adapters are available for installation in vessels or pipes. The adapters are optionally available with inspection certificate 3.1 EN 10204.

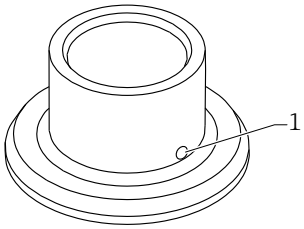

A0023557

68 Weld-in adapter (sample view)

1 Leakage hole

Weld in the weld-in adapter in such a way that the leakage hole is pointing downwards. This enables any leaks to be detected quickly.

- G 1, Ø53 mounting on the pipe
- G 1, Ø60 flush mount on the vessel
- G ¾, Ø55 flush mount
- G 1 sensor adjustable

For detailed information, see "Technical Information" TI00426F (Weld-in adapters, process adapters and flanges)

Available in the Downloads area of the Endress+Hauser website (www.endress.com/downloads).

Documentation

For an overview of the scope of the associated Technical Documentation, refer to the following:
- *Device Viewer* (www.endress.com/deviceviewer): Enter the serial number from the nameplate
- *Endress+Hauser Operations app*: Enter serial number from nameplate or scan matrix code on nameplate.

Standard documentation	**Document type: Operating Instructions (BA)** The Operating Instructions contain all the information that is required in various phases of the life cycle of the device: from product identification, incoming acceptance and storage, to mounting, connection, operation and commissioning through to troubleshooting, maintenance and disposal. BA01894F **Document type: Brief Operating Instructions (KA)** Quick guide to obtaining the first measured value – the Brief Operating Instructions contain all the essential information from incoming acceptance to initial commissioning. KA01429F **Document type: Safety Instructions, certificates** Depending on the approval, safety instructions for electrical equipment in hazardous areas are also supplied with the device. They are an integral part of the Operating Instructions. Information on the Safety Instructions (XA) that are relevant for the device is provided on the nameplate.
Supplementary device-dependent documentation	Additional documents are supplied depending on the device version ordered: Always comply strictly with the instructions in the supplementary documentation. The supplementary documentation is an integral part of the device documentation. **Special Documentation** ▪ SD02662F: Heartbeat Verification + Monitoring application package ▪ SD02389F: Bluetooth module VU121, radio approval ▪ SD02398F: Sliding sleeve for Liquiphant (installation instructions) ▪ SD01622P: Weld-in adapter (installation instructions) ▪ TI00426F: Weld-in adapters, process adapters and flanges (overview)

Registered trademarks

Bluetooth®
The *Bluetooth®* word mark and logos are registered trademarks owned by the Bluetooth SIG, Inc. and any use of such marks by Endress+Hauser is under license. Other trademarks and trade names are those of their respective owners.

Apple®
Apple, the Apple logo, iPhone, and iPod touch are trademarks of Apple Inc., registered in the U.S. and other countries. App Store is a service mark of Apple Inc.

Android®
Android, Google Play and the Google Play logo are trademarks of Google Inc.

71783263

www.addresses.endress.com

Endress+Hauser

People for Process Automation