BA02399D/06/EN/01.25-00
71712930
2025-11-11

Valid as of version
01.00.zz (Device firmware)

Operating Instructions
Proline Prowirl O 200

Vortex flowmeter
Modbus TCP

Endress+Hauser
People for Process Automation

- Make sure the document is stored in a safe place such that it is always available when working on or with the device.
- To avoid danger to individuals or the facility, read the "Basic safety instructions" section carefully, as well as all other safety instructions in the document that are specific to working procedures.
- The manufacturer reserves the right to modify technical data without prior notice. Your Endress+Hauser sales organization will supply you with current information and updates to this manual.

Table of contents

1 About this document 6
1.1 Document function 6
1.2 Symbols 6
1.2.1 Safety symbols 6
1.2.2 Electrical symbols 6
1.2.3 Communication-specific symbols 6
1.2.4 Tool symbols 7
1.2.5 Symbols for certain types of information 7
1.2.6 Symbols in graphics 7
1.3 Documentation 8
1.4 Registered trademarks 8

2 Safety instructions 9
2.1 Requirements for the personnel 9
2.2 Intended use 9
2.3 Workplace safety 10
2.4 Operational safety 10
2.5 Product safety 10
2.6 IT security 10
2.7 Device-specific IT security 11
2.7.1 Protecting access via hardware write protection 11
2.7.2 Protecting access via a password 11
2.7.3 Access via fieldbus 11

3 Product description 12
3.1 Product design 12

4 Incoming acceptance and product identification 13
4.1 Incoming acceptance 13
4.2 Product identification 13
4.2.1 Sensor nameplate 14
4.2.2 Symbols on the device 16

5 Storage and transport 17
5.1 Storage conditions 17
5.2 Transporting the product 17
5.2.1 Measuring devices without lifting lugs 17
5.2.2 Measuring devices with lifting lugs . . 18
5.2.3 Transporting with a fork lift 18
5.3 Packaging disposal 18

6 Installation 19
6.1 Installation requirements 19
6.1.1 Installation position 19
6.1.2 Environmental and process requirements 22
6.2 Installing the device 26
6.2.1 Required tools 26
6.2.2 Preparing the measuring device 26
6.2.3 Installing the sensor 26
6.2.4 Installing the transmitter of the remote version 26
6.2.5 Turning the transmitter housing 27
6.2.6 Turning the display module 28
6.3 Post-mounting check 28

7 Electrical connection 30
7.1 Electrical safety 30
7.2 Connecting requirements 30
7.2.1 Required tools 30
7.2.2 Requirements for connection cable . . . 30
7.2.3 Connecting cable for remote version . 30
7.2.4 Terminal assignment 31
7.2.5 Modbus TCP over Ethernet-APL 10 Mbit/s 31
7.2.6 Shielding and grounding 32
7.2.7 Requirements for the supply unit 32
7.2.8 Preparing the measuring instrument . 33
7.3 Connecting the device 33
7.3.1 Connecting the compact version 33
7.3.2 Connecting the remote version 35
7.4 Potential equalization 39
7.4.1 Requirements 39
7.5 Activating and deactivating the default IP address 40
7.5.1 Activating and deactivating the default IP address via the DIP switch . 40
7.6 Ensuring the degree of protection 40
7.7 Post-connection check 41

8 Operation options 42
8.1 Overview of operation options 42
8.2 Structure and function of the operating menu 43
8.2.1 Structure of the operating menu 43
8.2.2 Operating philosophy 44
8.3 Access to operating menu via local display . . . 45
8.3.1 Operational display 45
8.3.2 Navigation view 47
8.3.3 Editing view 48
8.3.4 Operating elements 50
8.3.5 Opening the context menu 51
8.3.6 Navigating and selecting from list . . . 52
8.3.7 Calling the parameter directly 52
8.3.8 Calling up help text 53
8.3.9 Changing the parameters 54
8.3.10 User roles and related access authorization 55
8.3.11 Disabling write protection via access code 55

8.3.12 Enabling and disabling the keypad lock . . . 56
8.4 Access to operating menu via web browser . . . 56
8.4.1 Function range . . . 56
8.4.2 Logging on . . . 56
8.4.3 User interface . . . 56
8.4.4 Disabling the Web server . . . 57
8.4.5 Logging out . . . 58
8.5 Access to the operating menu via the operating tool . . . 58
8.5.1 Connecting the operating tool . . . 58

9 System integration . . . 60
9.1 Overview of device description files . . . 60
9.1.1 Current version data for the device . . . 60
9.1.2 Operating tools . . . 60
9.2 Modbus TCP system integration . . . 60

10 Commissioning . . . 61
10.1 Post-mounting and post-connection check . . . 61
10.2 Switching on the measuring device . . . 61
10.3 Setting the operating language . . . 61
10.4 Configuring the device . . . 61
10.4.1 Displaying the communication interface . . . 62
10.4.2 Setting the system units . . . 65
10.4.3 Selecting and setting the medium . . . 69
10.4.4 Configuring the local display . . . 72
10.4.5 Configuring the low flow cut off . . . 74
10.4.6 Advanced settings . . . 76
10.5 Simulation . . . 101
10.6 Protecting settings from unauthorized access 102
10.6.1 Write protection via access code . . . 102
10.6.2 Write protection via write protection switch . . . 103
10.7 Application-specific commissioning . . . 104
10.7.1 Steam application . . . 104
10.7.2 Liquid application . . . 104
10.7.3 Gas applications . . . 105
10.7.4 Calculation of the measured variables . . . 108

11 Operation . . . 112
11.1 Reading the device locking status . . . 112
11.2 Adjusting the operating language . . . 112
11.3 Configuring the display . . . 112
11.4 Reading off measured values . . . 112
11.4.1 Process variables . . . 112
11.4.2 Totalizer . . . 115
11.5 Adapting the measuring device to the process conditions . . . 116
11.6 Performing a totalizer reset . . . 116
11.6.1 Function scope of "Control Totalizer" parameter . . . 116
11.6.2 Function range of "Reset all totalizers" parameter . . . 117
11.7 Displaying the measured value history . . . 117

12 Diagnostics and troubleshooting . . 120
12.1 General troubleshooting . . . 120
12.2 Diagnostic information via LEDs . . . 121
12.2.1 Transmitter . . . 121
12.3 Diagnostic information on local display . . . 122
12.3.1 Diagnostic message . . . 122
12.3.2 Calling up remedial actions . . . 124
12.4 Diagnostic information in the web browser . . 124
12.4.1 Diagnostic options . . . 124
12.4.2 Calling up remedial actions . . . 125
12.5 Diagnostic information in FieldCare or DeviceCare . . . 125
12.5.1 Diagnostic options . . . 125
12.5.2 Calling up remedy information . . . 126
12.6 Adapting the diagnostic behavior . . . 126
12.7 Overview of diagnostic information . . . 127
12.7.1 Operating conditions for displaying the following diagnostics information . . . 127
12.7.2 Emergency mode in event of temperature compensation . . . 127
12.8 Pending diagnostic events . . . 127
12.9 Diagnostic list . . . 128
12.10 Event logbook . . . 128
12.10.1 Reading out the event logbook . . . 128
12.10.2 Filtering the event logbook . . . 129
12.10.3 Overview of information events . . . 129
12.11 Resetting the device . . . 131
12.11.1 Function scope of the "Device reset" parameter . . . 131
12.12 Device information . . . 131
12.13 Firmware history . . . 133

13 Maintenance . . . 134
13.1 Maintenance work . . . 134
13.1.1 Cleaning . . . 134
13.1.2 Replacing seals . . . 134
13.2 Measuring and test equipment . . . 135
13.3 Endress+Hauser services . . . 135

14 Repair . . . 136
14.1 General notes . . . 136
14.1.1 Repair and conversion concept . . . 136
14.1.2 Notes for repair and conversion . . . 136
14.2 Spare parts . . . 136
14.3 Endress+Hauser services . . . 137
14.4 Return . . . 137
14.5 Disposal . . . 137
14.5.1 Removing the measuring device . . . 137
14.5.2 Disposing of the measuring device . . 138

15 Accessories . . . 139
15.1 Device-specific accessories . . . 139
15.1.1 For the transmitter . . . 139
15.1.2 For the sensor . . . 140
15.2 Service-specific accessories . . . 140

15.3 System components 140

16 Technical data 141

16.1 Application 141
16.2 Function and system design 141
16.3 Input 141
16.4 Output 148
16.5 Power supply 150
16.6 Performance characteristics 152
16.7 Installation 155
16.8 Environment 155
16.9 Process 157
16.10 Mechanical construction 158
16.11 Operability 163
16.12 Certificates and approvals 165
16.13 Application packages 167
16.14 Accessories 167
16.15 Documentation 167

Index 169

1 About this document

1.1 Document function

These Operating Instructions contain all the information required in the various life cycle phases of the device: from product identification, incoming acceptance and storage, to installation, connection, operation and commissioning, through to troubleshooting, maintenance and disposal.

1.2 Symbols

1.2.1 Safety symbols

⚠ DANGER
This symbol alerts you to a dangerous situation. Failure to avoid this situation will result in serious or fatal injury.

⚠ WARNING
This symbol alerts you to a potentially dangerous situation. Failure to avoid this situation can result in serious or fatal injury.

⚠ CAUTION
This symbol alerts you to a potentially dangerous situation. Failure to avoid this situation can result in minor or medium injury.

NOTICE
This symbol alerts you to a potentially harmful situation. Failure to avoid this situation can result in damage to the product or something in its vicinity.

1.2.2 Electrical symbols

Symbol	Meaning
⎓	Direct current
∼	Alternating current
≂	Direct current and alternating current
⏚	**Ground connection** A grounded terminal which, as far as the operator is concerned, is grounded via a grounding system.
⏚	**Protective earth (PE)** Ground terminals that must be connected to ground prior to establishing any other connections. The ground terminals are located on the interior and exterior of the device: ▪ Interior ground terminal: protective earth is connected to the mains supply. ▪ Exterior ground terminal: device is connected to the plant grounding system.

1.2.3 Communication-specific symbols

Symbol	Meaning
	Wireless Local Area Network (WLAN) Communication via a wireless, local area network
	Bluetooth Wireless data transmission between devices over a short distance via radio technology

Symbol	Meaning
	LED LED is off.
	LED LED is on.
	LED LED flashing.

1.2.4 Tool symbols

Symbol	Meaning
	Flat-blade screwdriver
	Allen key
	Open-end wrench

1.2.5 Symbols for certain types of information

Symbol	Meaning
	Permitted Procedures, processes or actions that are permitted.
	Preferred Procedures, processes or actions that are preferred.
	Forbidden Procedures, processes or actions that are forbidden.
	Tip Indicates additional information.
	Reference to documentation
	Reference to page
	Reference to graphic
▶	Notice or individual step to be observed
1., 2., 3....	Series of steps
	Result of a step
	Help in the event of a problem
	Visual inspection

1.2.6 Symbols in graphics

Symbol	Meaning
1, 2, 3, ...	Item numbers
1., 2., 3., ...	Series of steps
A, B, C, ...	Views
A-A, B-B, C-C, ...	Sections

Symbol	Meaning
EX	Hazardous area
EX	Safe area (non-hazardous area)
≋➡	Flow direction

1.3 Documentation

For an overview of the scope of the associated Technical Documentation, refer to the following:
- *Device Viewer* (www.endress.com/deviceviewer): Enter the serial number from the nameplate
- *Endress+Hauser Operations app*: Enter serial number from nameplate or scan matrix code on nameplate.

The following document types are available in the Downloads area of the Endress+Hauser website (www.endress.com/downloads), depending on the device version:

Document type	Purpose and content of the document
Technical Information (TI)	**Planning aid for your device** The document contains all the technical data on the device and provides an overview of the accessories and other products that can be ordered for the device.
Brief Operating Instructions (KA)	**Guide that takes you quickly to the 1st measured value** The Brief Operating Instructions contain all the essential information from incoming acceptance to initial commissioning.
Operating Instructions (BA)	**Your reference document** The Operating Instructions contain all the information that is required in various phases of the life cycle of the device: from product identification, incoming acceptance and storage, to mounting, connection, operation and commissioning through to troubleshooting, maintenance and disposal.
Description of Device Parameters (GP)	**Reference for your parameters** The document provides a detailed explanation of each individual parameter. The description is aimed at those who work with the device over the entire life cycle and perform specific configurations.
Safety instructions (XA)	Depending on the approval, safety instructions for electrical equipment in hazardous areas are also supplied with the device. These are an integral part of the Operating Instructions. The nameplate indicates which Safety Instructions (XA) apply to the device.
Supplementary device-dependent documentation (SD/FY)	Always comply strictly with the instructions in the relevant supplementary documentation. The supplementary documentation is a constituent part of the device documentation.

1.4 Registered trademarks

Modbus®
Registered trademark of SCHNEIDER AUTOMATION, INC.

KALREZ®, VITON®
Registered trademarks of DuPont Performance Elastomers L.L.C., Wilmington, DE USA

GYLON®
Registered trademark of Garlock Sealing Technologies, Palmyar, NY, USA

2 Safety instructions

2.1 Requirements for the personnel

The personnel for installation, commissioning, diagnostics and maintenance must fulfill the following requirements:
- Trained, qualified specialists must have a relevant qualification for this specific function and task.
- Are authorized by the plant owner/operator.
- Are familiar with federal/national regulations.
- Before starting work, read and understand the instructions in the manual and supplementary documentation as well as the certificates (depending on the application).
- Follow instructions and comply with basic conditions.

The operating personnel must fulfill the following requirements:
- Are instructed and authorized according to the requirements of the task by the facility's owner-operator.
- Follow the instructions in this manual.

2.2 Intended use

Application and media
The measuring instrument described in this manual is intended only for the flow measurement of liquids, gases and vapors.

Depending on the version ordered, the measuring instrument can also measure potentially explosive, flammable, poisonous and oxidizing media.

Measuring instruments for use in hazardous areas, in hygienic applications, or where there is an increased risk due to pressure, are specially labeled on the nameplate.

To ensure that the measuring instrument is in perfect condition during operation:
- Only use the measuring instrument in full compliance with the data on the nameplate and the general conditions listed in the Operating Instructions and supplementary documentation.
- Using the nameplate, check whether the ordered device is permitted for the intended use in the hazardous area (e.g. explosion protection, pressure vessel safety).
- Use the measuring instrument only for media to which the process-wetted materials are sufficiently resistant.
- Keep within the specified pressure and temperature range.
- Keep within the specified ambient temperature range.
- Protect the measuring instrument permanently against corrosion from environmental influences.

Incorrect use
Non-designated use can compromise safety. The manufacturer is not liable for damage caused by improper or non-designated use.

⚠ WARNING
Danger of breakage due to corrosive or abrasive fluids and ambient conditions!
- Verify the compatibility of the process fluid with the sensor material.
- Ensure the resistance of all fluid-wetted materials in the process.
- Keep within the specified pressure and temperature range.

NOTICE

Verification for borderline cases:

- For special fluids and fluids for cleaning, Endress+Hauser is glad to provide assistance in verifying the corrosion resistance of fluid-wetted materials, but does not accept any warranty or liability as minute changes in the temperature, concentration or level of contamination in the process can alter the corrosion resistance properties.

Residual risks

⚠ CAUTION

Risk of hot or cold burns! The use of media and electronics with high or low temperatures can produce hot or cold surfaces on the device.

- Mount suitable touch protection.

2.3 Workplace safety

For work on and with the device:

- Wear the required personal protective equipment according to federal/national regulations.

2.4 Operational safety

Damage to the device!

- Operate the device in proper technical condition and fail-safe condition only.
- The operator is responsible for the interference-free operation of the device.

Modifications to the device

Unauthorized modifications to the device are not permitted and can lead to unforeseeable dangers!

- If modifications are nevertheless required, consult with the manufacturer.

Repair

To ensure continued operational safety and reliability:

- Carry out repairs on the device only if they are expressly permitted.
- Observe federal/national regulations pertaining to the repair of an electrical device.
- Use only original spare parts and accessories.

2.5 Product safety

This state-of-the-art device is designed and tested in accordance with good engineering practice to meet operational safety standards. It left the factory in a condition in which it is safe to operate.

It meets general safety standards and legal requirements. It also complies with the EU directives listed in the device-specific EU declaration of conformity. The manufacturer confirms this by affixing the CE mark.

2.6 IT security

The manufacturer warranty is valid only if the product is installed and used as described in the Operating Instructions. The product is equipped with security mechanisms to protect it against any inadvertent changes to the settings.

IT security measures, which provide additional protection for the product and associated data transfer, must be implemented by the operators themselves in line with their security standards.

2.7 Device-specific IT security

The device offers a range of specific functions to support protective measures on the operator's side. These functions can be configured by the user and guarantee greater in-operation safety if used correctly. The following list provides an overview of the most important functions:

2.7.1 Protecting access via hardware write protection

Write access to the parameters of the device via the local display or operating tool (e.g. FieldCare, DeviceCare) can be disabled via a write protection switch (DIP switch on the main electronics module). When hardware write protection is enabled, only read access to the parameters is possible.

2.7.2 Protecting access via a password

A password can be used to protect against write access to the device parameters.

This controls write access to the device parameters via the local display or other operating tools (e.g. FieldCare, DeviceCare) and, in terms of functionality, corresponds to hardware write protection. If the CDI service interface is used, read access is only possible by first entering the password.

User-specific access code

Write access to the device parameters via the local display or operating tool (e.g. FieldCare, DeviceCare) can be protected by the modifiable, user-specific access code (→ 🗎 102).

When the device is delivered, the device does not have an access code and is equivalent to *0000* (open).

General notes on the use of passwords

- The access code and network key supplied with the device should be changed during commissioning for safety reasons.
- Follow the general rules for generating a secure password when defining and managing the access code and network key.
- The user is responsible for the management and careful handling of the access code and network key.
- For information on configuring the access code or on what to do if you lose the password, for example, see "Write protection via access code" → 🗎 102.

2.7.3 Access via fieldbus

When communicating via fieldbus, access to the device parameters can be restricted to *"Read only"* access. The option can be changed in the **Fieldbus write access** parameter.

This does not affect cyclic measured value transmission to the higher-order system, which is always guaranteed.

For detailed information on device parameters, see: Description of Device Parameters.

3 Product description

The device consists of a transmitter and a sensor.

Two device versions are available:
- Compact version - transmitter and sensor form a mechanical unit.
- Remote version - transmitter and sensor are mounted in separate locations.

3.1 Product design

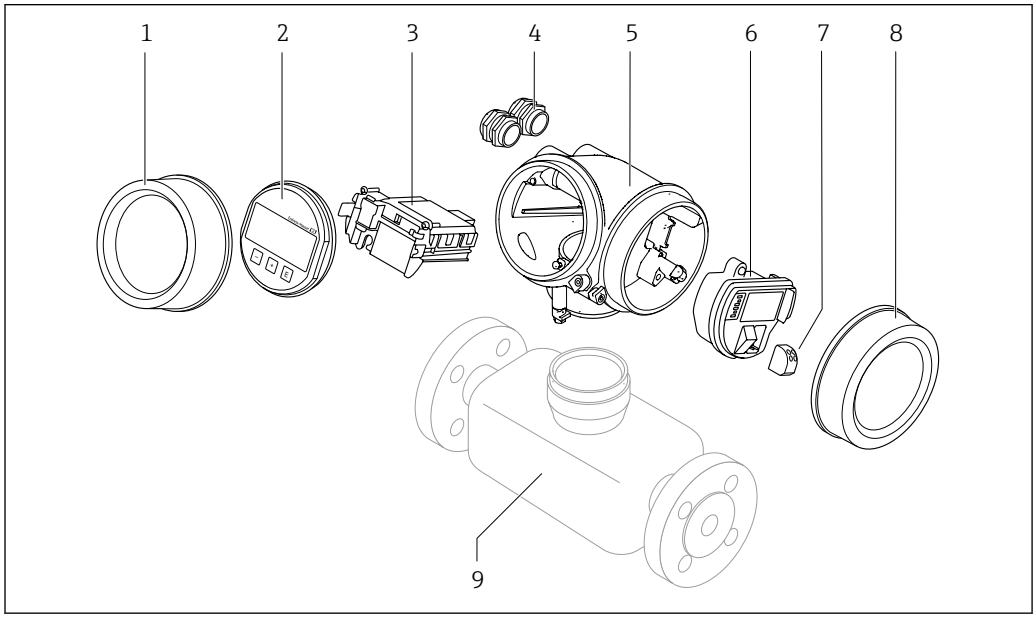

1 *Electronics compartment cover*
2 *Display module*
3 *Main electronics module*
4 *Cable glands*
5 *Transmitter housing (incl. HistoROM)*
6 *I/O electronics module*
7 *Terminals (plug-in spring terminals)*
8 *Connection compartment cover*
9 *Sensor*

4 Incoming acceptance and product identification

4.1 Incoming acceptance

On receipt of the delivery:

1. Check the packaging for damage.
   ↳ Report all damage immediately to the manufacturer.
   Do not install damaged components.
2. Check the scope of delivery using the delivery note.
3. Compare the data on the nameplate with the order specifications on the delivery note.
4. Check the technical documentation and all other necessary documents, e.g. certificates, to ensure they are complete.

If one of the conditions is not satisfied, contact the manufacturer.

4.2 Product identification

The device can be identified in the following ways:
- Nameplate
- Order code with details of the device features on the delivery note
- Enter the serial numbers from the nameplates in the *Device Viewer* (www.endress.com/deviceviewer): all the information about the device is displayed.
- Enter the serial numbers from the nameplates into the *Endress+Hauser Operations app* or scan the DataMatrix code on the nameplate with the *Endress+Hauser Operations app*: all the information about the device is displayed.

For an overview of the scope of the associated Technical Documentation, refer to the following:
- The "Additional standard device documentation" and "Supplementary device-dependent documentation" sections
- The *Device Viewer*: Enter the serial number from the nameplate (www.endress.com/deviceviewer)
- The *Endress+Hauser Operations app*: Enter the serial number from the nameplate or scan the DataMatrix code on the nameplate.

4.2.1 Sensor nameplate

Order code for "Housing" option B "GT18 dual compartment, 316L, compact" and option K "GT18 dual compartment, 316L, remote"

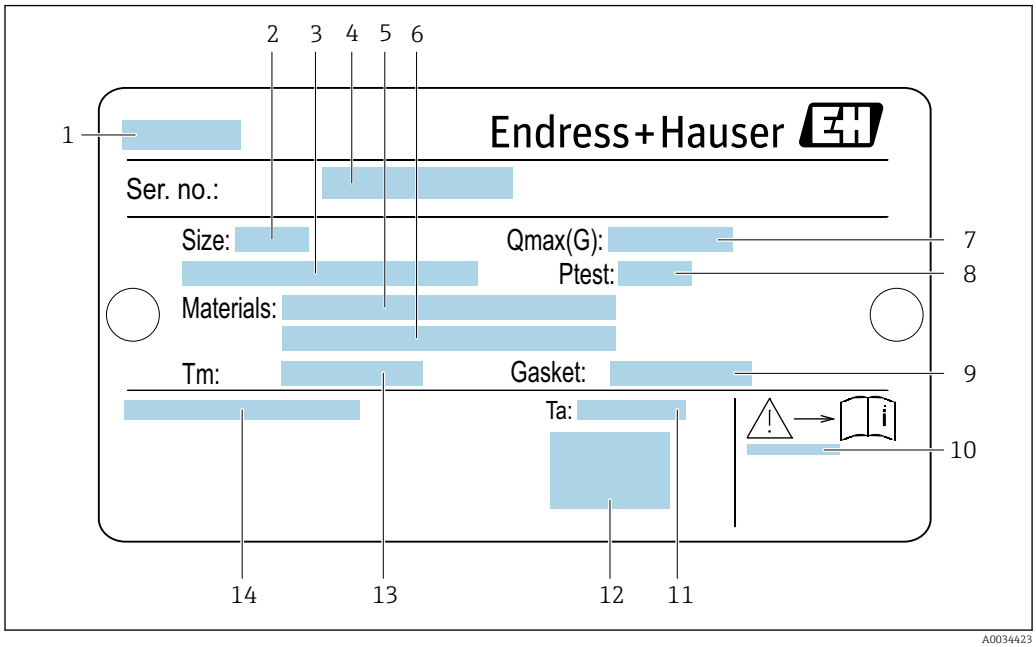

1 Example of a sensor nameplate

1 *Name of sensor*
2 *Nominal diameter of sensor*
3 *Flange nominal diameter/nominal pressure*
4 *Serial number (Ser. no.)*
5 *Measuring tube material*
6 *Measuring tube material*
7 *Maximum permitted volume flow (gas/steam): Q_{max}* → 142
8 *Test pressure of the sensor: OPL* → 157
9 *Seal material*
10 *Document number of safety-related supplementary documentation* → 168
11 *Ambient temperature range*
12 *CE mark*
13 *Medium temperature range*
14 *Degree of protection*

Order code for "Housing" option C "GT20 dual compartment, aluminum, coated, compact"

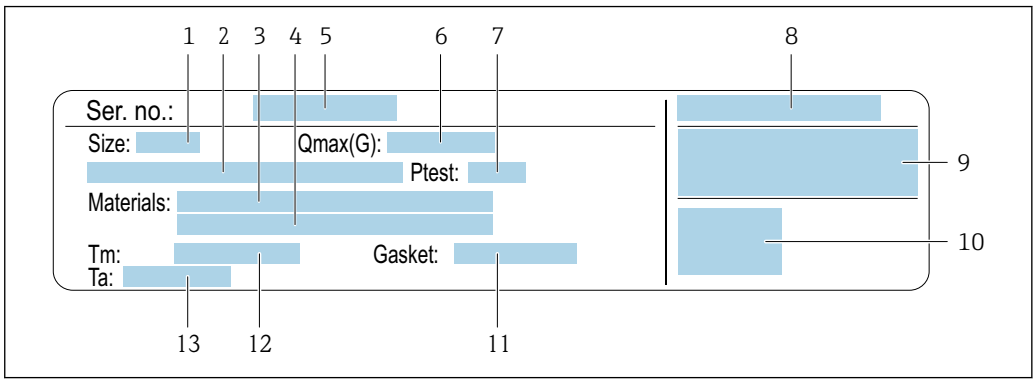

2 *Example of a sensor nameplate*

1 *Nominal diameter of sensor*
2 *Flange nominal diameter/nominal pressure*
3 *Measuring tube material*
4 *Measuring tube material*
5 *Serial number (Ser. no.)*
6 *Maximal permitted volume flow (gas/steam)*
7 *Test pressure of the sensor*
8 *Degree of protection*
9 *Approval information for explosion protection and Pressure Equipment Directive* → 168
10 *CE mark*
11 *Seal material*
12 *Medium temperature range*
13 *Ambient temperature range*

Order code for "Housing" option J "GT20 dual compartment, aluminum, coated, remote"

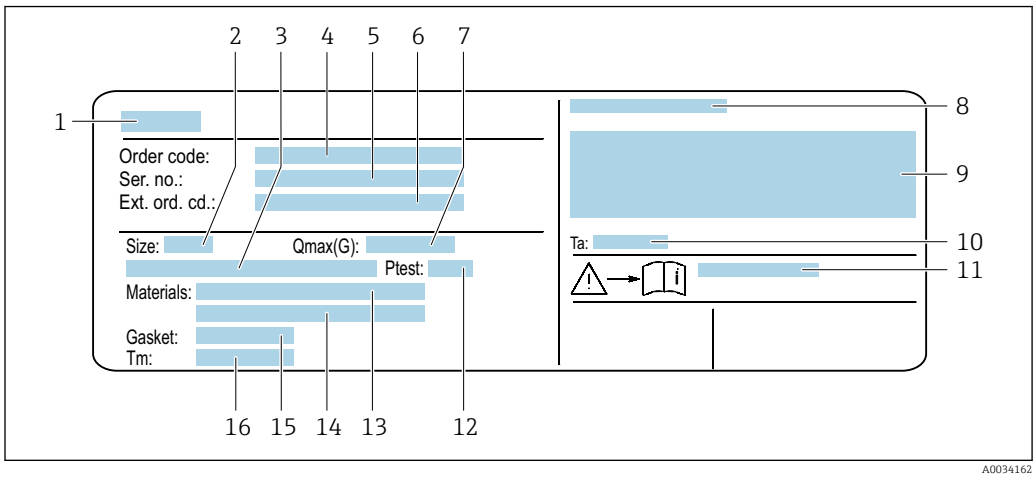

3 Example of a sensor nameplate

1 *Name of sensor*
2 *Nominal diameter of sensor*
3 *Flange nominal diameter/nominal pressure*
4 *Order code*
5 *Serial number (Ser. no.)*
6 *Extended order code (ext. ord. cd.)*
7 *Maximal permitted volume flow (gas/steam)*
8 *Degree of protection*
9 *Approval information for explosion protection and Pressure Equipment Directive*
10 *Ambient temperature range*
11 *Document number of safety-related supplementary documentation → 168*
12 *Test pressure of the sensor*
13 *Measuring tube material*
14 *Measuring tube material*
15 *Seal material*
16 *Medium temperature range*

Order code
The measuring device is reordered using the order code.

Extended order code
- The device type (product root) and basic specifications (mandatory features) are always listed.
- Of the optional specifications (optional features), only the safety and approval-related specifications are listed (e.g. LA). If other optional specifications are also ordered, these are indicated collectively using the # placeholder symbol (e.g. #LA#).
- If the ordered optional specifications do not include any safety and approval-related specifications, they are indicated by the + placeholder symbol (e.g. XXXXXX-ABCDE +).

4.2.2 Symbols on the device

Symbol	Meaning
⚠	**WARNING!** This symbol alerts you to a dangerous situation. Failure to avoid this situation can result in serious or fatal injury. Please consult the documentation for the measuring instrument to discover the type of potential danger and measures to avoid it.
📖	**Reference to documentation** Refers to the corresponding device documentation.
⏚	**Protective ground connection** A terminal that must be connected to the ground prior to establishing any other connections.

5 Storage and transport

5.1 Storage conditions

Observe the following notes for storage:
- Store in the original packaging to ensure protection from shock.
- Do not remove protective covers or protective caps installed on process connections. They prevent mechanical damage to the sealing surfaces and contamination in the measuring tube.
- Protect from direct sunlight. Avoid unacceptably high surface temperatures.
- Store in a dry and dust-free place.
- Do not store outdoors.

Storage temperature: −50 to +80 °C (−58 to +176 °F)

5.2 Transporting the product

Transport the measuring device to the measuring point in the original packaging.

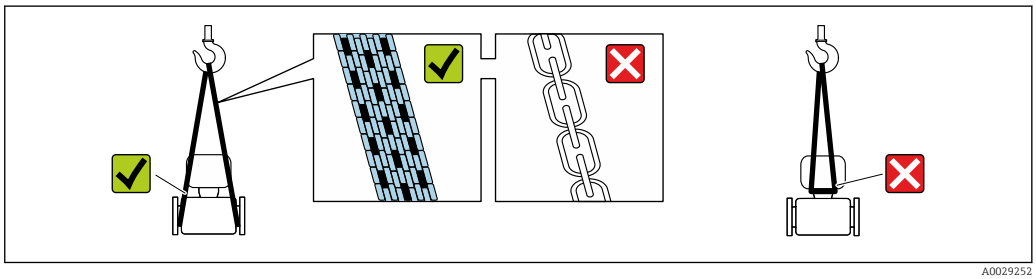

A0029252

Do not remove protective covers or caps installed on process connections. They prevent mechanical damage to the sealing surfaces and contamination in the measuring tube.

5.2.1 Measuring devices without lifting lugs

WARNING

Center of gravity of the measuring device is higher than the suspension points of the webbing slings.

Risk of injury if the measuring device slips.
- Secure the measuring device against slipping or turning.
- Observe the weight specified on the packaging (stick-on label).

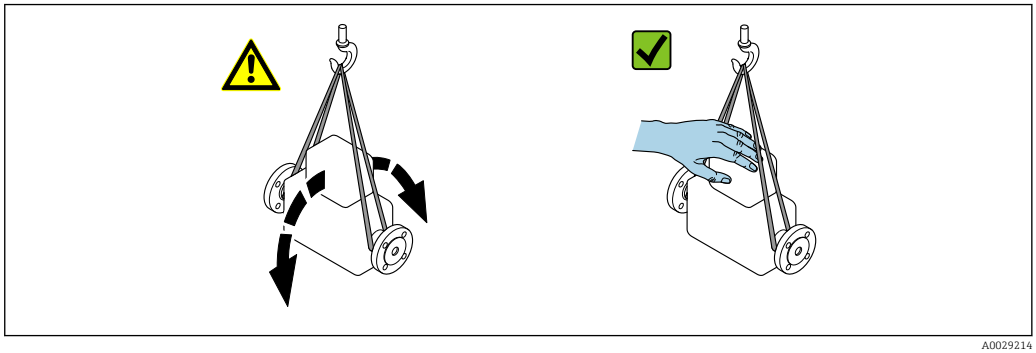

A0029214

5.2.2 Measuring devices with lifting lugs

⚠ CAUTION

Special transportation instructions for devices with lifting lugs

- ▶ Only use the lifting lugs fitted on the device or flanges to transport the device.
- ▶ The device must always be secured at two lifting lugs at least.

5.2.3 Transporting with a fork lift

If transporting in wood crates, the floor structure enables the crates to be lifted lengthwise or at both sides using a forklift.

5.3 Packaging disposal

All packaging materials are environmentally friendly and 100% recyclable:

- Outer packaging of device
  Stretch wrap made of polymer in accordance with EU Directive 2002/95/EC (RoHS)
- Packaging
  - Wood crate treated in accordance with ISPM 15 standard, confirmed by IPPC logo
  - Cardboard box in accordance with European packaging guideline 94/62/EC, recyclability confirmed by Resy symbol
- Transport material and fastening fixtures
  - Disposable plastic pallet
  - Plastic straps
  - Plastic adhesive strips
- Filler material
  Paper pads

6 Installation

6.1 Installation requirements

6.1.1 Installation position

Mounting location

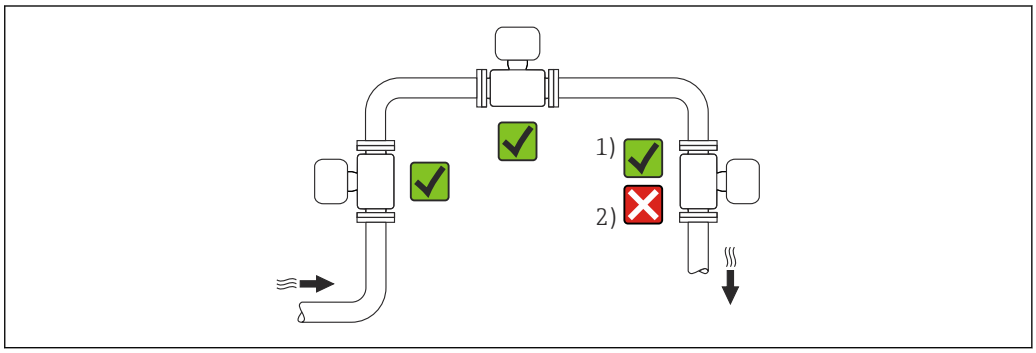

1 Installation suitable for gases and steam
2 Installation not suitable for liquids

Orientation

The direction of the arrow on the sensor nameplate helps you to install the sensor according to the flow direction (direction of medium flow through the piping).

Vortex meters require a fully developed flow profile as a prerequisite for correct volume flow measurement. Therefore, please note the following:

Orientation			Recommendation	
			Compact version	Remote version
A	Vertical orientation (liquids)	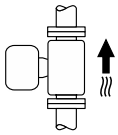 A0015591	✓✓ 1)	✓✓
A	Vertical orientation (dry gases)	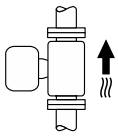 A0015591 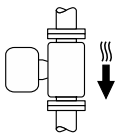 A0041785	✓✓	✓✓
B	Horizontal orientation, transmitter head up	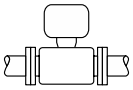 A0015589	✓✓ 2)	✓✓

Orientation			Recommendation	
			Compact version	Remote version
C	Horizontal orientation, transmitter head down	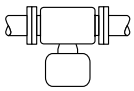 A0015590	✓✓ [3]	✓✓
D	Horizontal orientation, transmitter head at side	A0015592	✓✓	✓✓

1) In the case of liquids, there should be upward flow in vertical pipes to avoid partial pipe filling (Fig. A). Disruption in flow measurement!
2) In the case of hot media (e.g. steam or medium temperature (TM) ≥ 200 °C (392 °F): orientation C or D
3) In the case of very cold media (e.g. liquid nitrogen): orientation B or D

Inlet and outlet runs

To achieve the specified measurement accuracy of the measuring instrument, observe at least the inlet and outlet runs listed below.

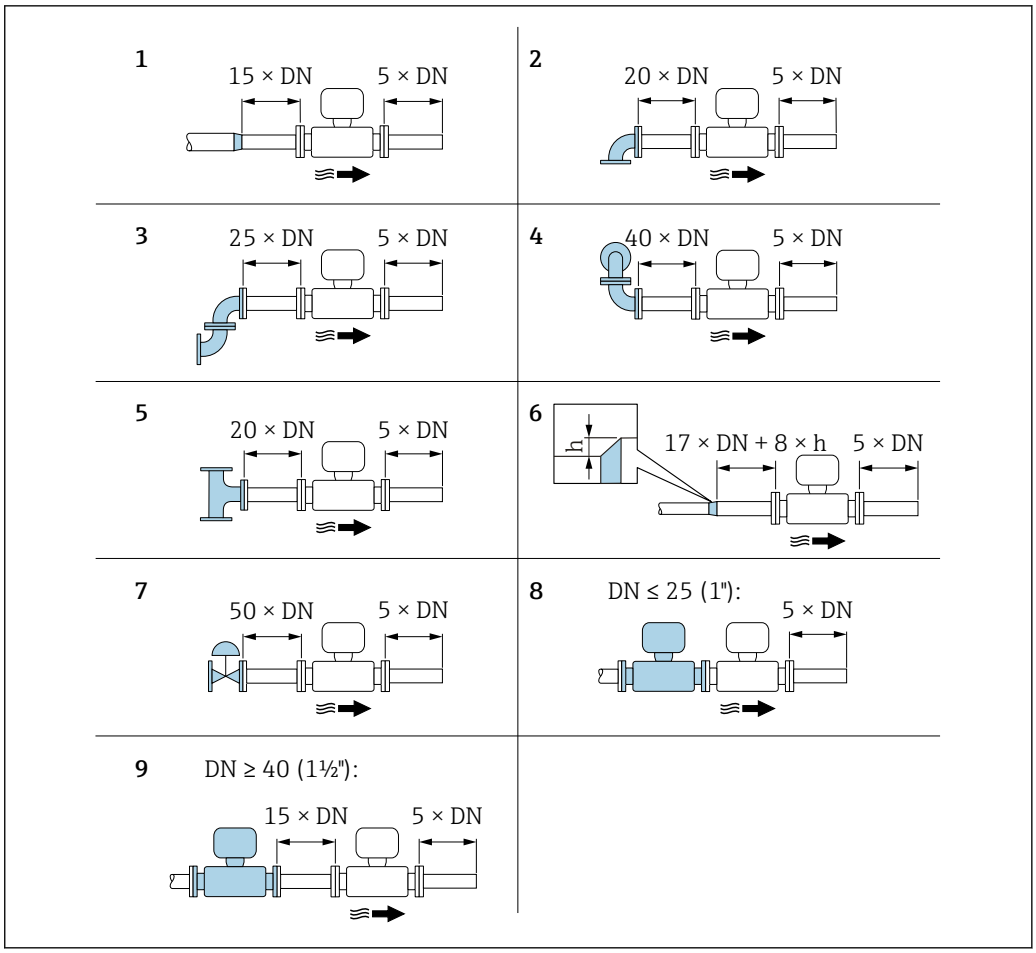

4 *Minimum inlet and outlet runs with various flow obstructions*

h Difference in expansion
1 Reduction by one nominal diameter size
2 Single elbow (90° elbow)
3 Double elbow (2 × 90° elbows, opposite)
4 Double elbow 3D (2 × 90° elbows, opposite, not on one plane)
5 T-piece
6 Expansion
7 Control valve
8 Two measuring instruments in a row where DN ≤ 25 (1"): directly flange on flange
9 Two measuring instruments in a row where DN ≥ 40 (1½"): for spacing; see graphic

- If there are several flow disturbances present, the longest specified inlet run must be maintained.
- If the required inlet runs cannot be observed, it is possible to install a specially designed flow conditioner → 21.

Flow conditioner

If the inlet runs cannot be observed, the use of a flow conditioner is recommended.

The flow conditioner is fitted between two pipe flanges and centered by the mounting bolts. Generally this reduces the inlet run needed to 10 × DN with full measurement accuracy.

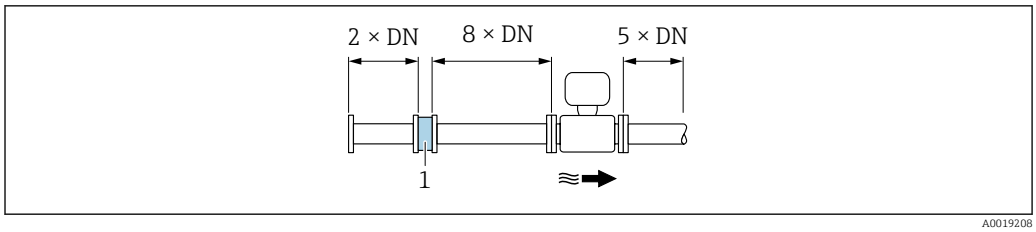

1 Flow conditioner

The pressure loss for flow conditioners is calculated as follows:

Δp [mbar] = 0.0085 · ρ [kg/m^3] · v^2 [m/s]

Example for steam
p = 10 bar abs. t = 240 °C → ρ = 4.39 kg/m^3 v = 40 m/s
$\Delta p = 0.0085 \cdot 4.39 \cdot 40^2 = 59.7$ mbar

Example for H_2O condensate (80 °C)
ρ = 965 kg/m^3 v = 2.5 m/s
$\Delta p = 0.0085 \cdot 965 \cdot 2.5^2 = 51.3$ mbar

ρ : density of the process medium
v: average flow velocity
abs. = absolute

For the dimensions of the flow conditioner, see the "Technical Information" document, "Mechanical construction" section

Outlet runs when installing external devices

If installing an external device, observe the specified distance.

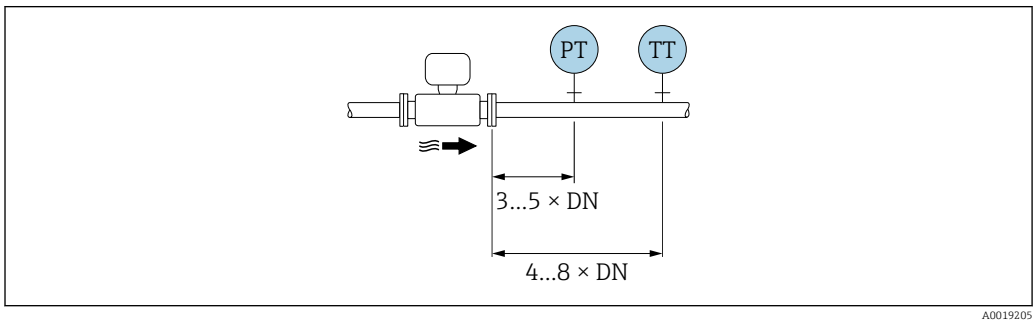

PT Pressure
TT Temperature device

Installation dimensions

For the dimensions and installed lengths of the device, see the "Technical Information" document, "Mechanical construction" section

6.1.2 Environmental and process requirements

Ambient temperature range

Compact version

Measuring instrument	Non-hazardous area:	−40 to +80 °C (−40 to +176 °F)
	Ex i, Ex nA, Ex ec:	−40 to +70 °C (−40 to +158 °F)

	Ex d, XP:	−40 to +60 °C (−40 to +140 °F)
	Ex d, Ex ia:	−40 to +60 °C (−40 to +140 °F)
Local display		−40 to +70 °C (−40 to +158 °F) [1]

1) At temperatures below −20 °C (−4 °F), depending on the physical characteristics involved, it may no longer be possible to read the liquid crystal display.

Remote version

Transmitter	Non-hazardous area:	−40 to +80 °C (−40 to +176 °F)
	Ex i, Ex nA, Ex ec:	−40 to +80 °C (−40 to +176 °F)
	Ex d:	−40 to +60 °C (−40 to +140 °F)
	Ex d, Ex ia:	−40 to +60 °C (−40 to +140 °F)
Sensor	Non-hazardous area:	−40 to +85 °C (−40 to +185 °F)
	Ex i, Ex nA, Ex ec:	−40 to +85 °C (−40 to +185 °F)
	Ex d:	−40 to +85 °C (−40 to +185 °F)
	Ex d, Ex ia:	−40 to +85 °C (−40 to +185 °F)
Local display		−40 to +70 °C (−40 to +158 °F) [1]

1) At temperatures < −20 °C (−4 °F), depending on the physical characteristics involved, it may no longer be possible to read the liquid crystal display.

- If operating outdoors:
  Avoid direct sunlight, particularly in warm climatic regions.

You can order a weather protection cover from Endress+Hauser. → 139.

Thermal insulation

For optimum temperature measurement and mass calculation, heat transfer at the sensor must be avoided for some fluids. This can be ensured by installing thermal insulation. A wide range of materials can be used for the required insulation.

This applies for:
- Compact version
- Remote sensor version

The maximum insulation height permitted is illustrated in the diagram:

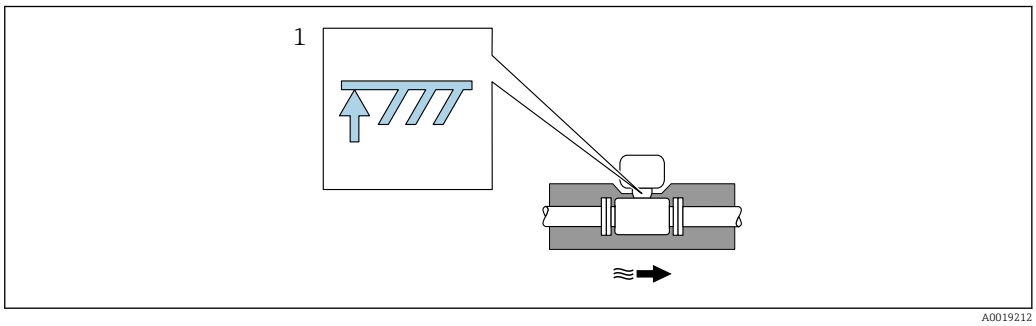

1 Maximum insulation height

- When insulating, ensure that a sufficiently large area of the housing support remains exposed.

The uncovered part serves as a radiator and protects the electronics from overheating and excessive cooling.

The function of the siphon is to protect the pressure measuring cell from excessively high steam process temperatures through the formation of condensate in the U-tube/circular pipe. To ensure the steam condenses, the siphon may only be insulated as far as the connection flange on the measuring tube side.

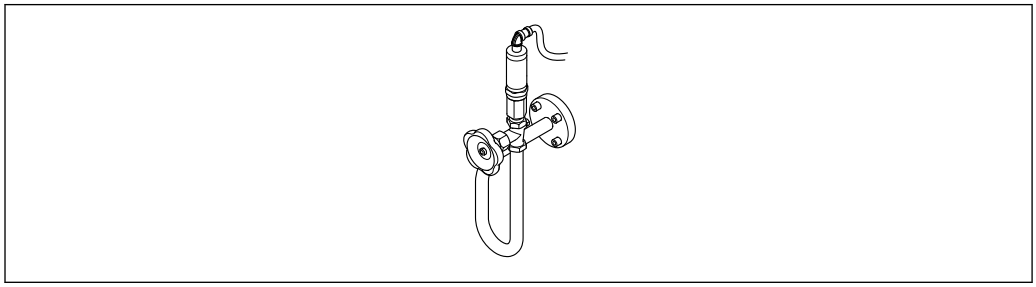

A0047532

5 *Siphon*

NOTICE

Electronics overheating on account of thermal insulation!

- ▶ Observe the maximum permitted insulation height of the transmitter neck so that the transmitter head and/or the connection housing of the remote version is completely free.
- ▶ Observe information on the permissible temperature ranges .
- ▶ Note that a certain orientation might be required, depending on the fluid temperature .

Installation for delta heat measurements

- Order code for "Sensor version", option CD "Mass; Alloy 718; 316L (integrated temperature measurement), −200 to +400 °C (−328 to +750 °F)"
- Order code for "Sensor version", option DC "Mass steam; Alloy 718; 316L (integrated pressure/temperature measurement), −200 to +400 °C (−328 to +750 °F)"
- Order code for "Sensor version", option DD "Mass gas/liquid; Alloy 718; 316L (integrated pressure/temperature measurement), −40 to +100 °C (−40 to +212 °F)"

The second temperature measurement is taken using a separate temperature sensor. The measuring instrument reads in this value via a communication interface.

- In the case of saturated steam delta heat measurements, the measuring instrument must be installed on the steam side.
- In the case of water delta heat measurements, the device can be installed on the cold or warm side.

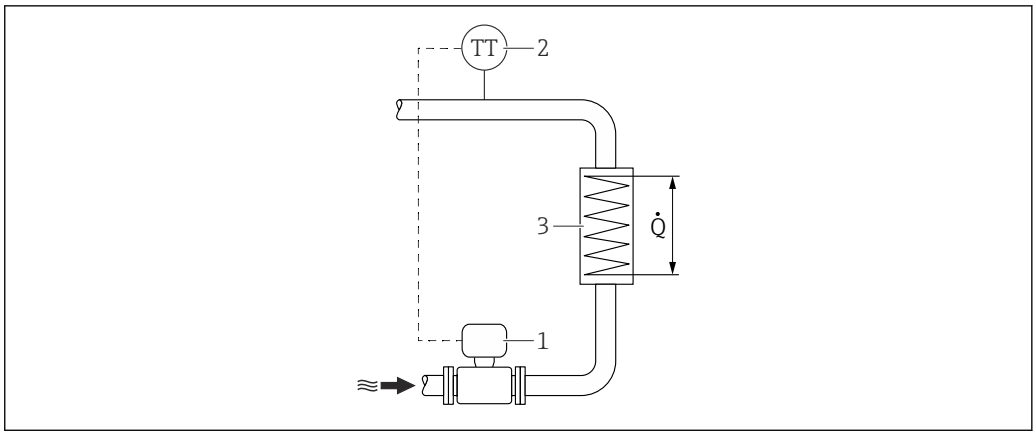

6 *Layout for delta heat measurement of saturated steam and water*

1 Measuring instrument
2 Temperature sensor
3 Heat exchanger
Q Heat flow

Installation in steam systems

The device has been tested for dynamic pressure surges of up to 300 bar (4 350 psi) by condensation-induced water hammer (CIWH). Despite the robust and reinforced design, the following best practice recommendations for steam applications apply to prevent damage from condensation-induced water hammer.

1. Ensure sufficient and constant condensate drainage from the pipes by using correctly dimensioned and well-maintained steam traps. These are generally installed every 30 to 50 m (100 to 165 in) in horizontal pipes or at ground points.
2. The steam lines must have an adequate gradient of at least 1% in the direction of the steam flow to ensure that the condensate is directed to the steam traps at the drain points
3. If the system is shut down, they must be drained completely.
4. Avoid pipe configurations that cause accumulations of standing water.
5. Slowly increase the static pressure and steam flow rate when starting up the system.
6. Make sure steam does not come into contact with significantly cooler condensate.

Protective cover

A protective cover is available as an accessory for the device. It is used to protect against direct sunlight, precipitation and ice.

When installing the protective cover, a minimum upward clearance must be maintained: 222 mm (8.74 in)

The protective cover can be ordered via the product structure together with the device: Order code for "Accessories enclosed" option PB "Protective cover"

Ordered separately as an accessory → 139

6.2 Installing the device

6.2.1 Required tools

For transmitter

- For turning the transmitter housing: Open-ended wrench8 mm
- For opening the securing clamps: Allen key3 mm

For sensor

For flanges and other process connections: Use a suitable mounting tool.

6.2.2 Preparing the measuring device

1. Remove all remaining transport packaging.
2. Remove any protective covers or protective caps present from the sensor.
3. Remove stick-on label on the electronics compartment cover.

6.2.3 Installing the sensor

WARNING

Danger due to improper process sealing!

- ▶ Ensure that the inside diameters of the gaskets are greater than or equal to that of the process connections and piping.
- ▶ Ensure that the seals and sealing surfaces are clean and undamaged.
- ▶ Secure the seals correctly.

1. Ensure that the direction of the arrow on the sensor matches the flow direction of the medium.
2. To ensure compliance with device specifications, install the measuring instrument between the pipe flanges so that it is centered in the measurement section.
3. Install the measuring instrument or turn the transmitter housing so that the cable entries do not point upwards.

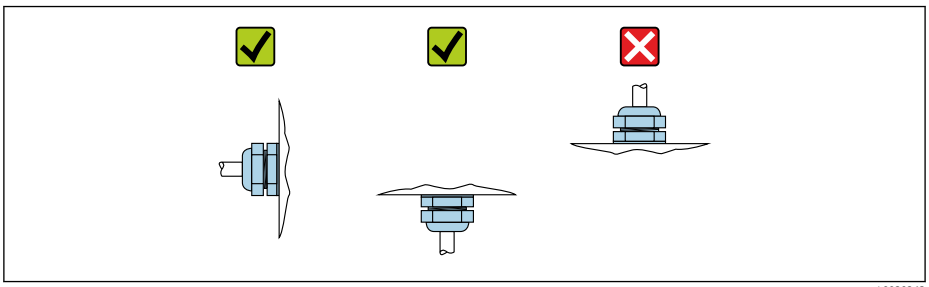

A0029263

6.2.4 Installing the transmitter of the remote version

NOTICE

Ambient temperature too high!

Danger of electronics overheating and housing deformation.

- ▶ Do not exceed the permitted maximum ambient temperature.
- ▶ If operating outdoors: Avoid direct sunlight and exposure to weathering, particularly in warm climatic regions.

NOTICE

Excessive force can damage the housing!

- ▶ Avoid excessive mechanical stress.

The transmitter of the remote version can be mounted in the following ways:
- Wall mounting
- Pipe mounting

Wall mounting

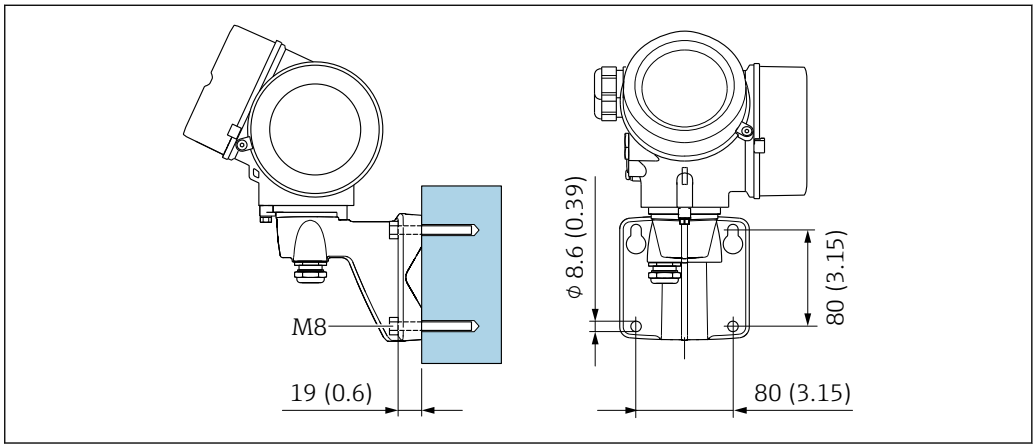

7 *mm (in)*

Pipe mounting

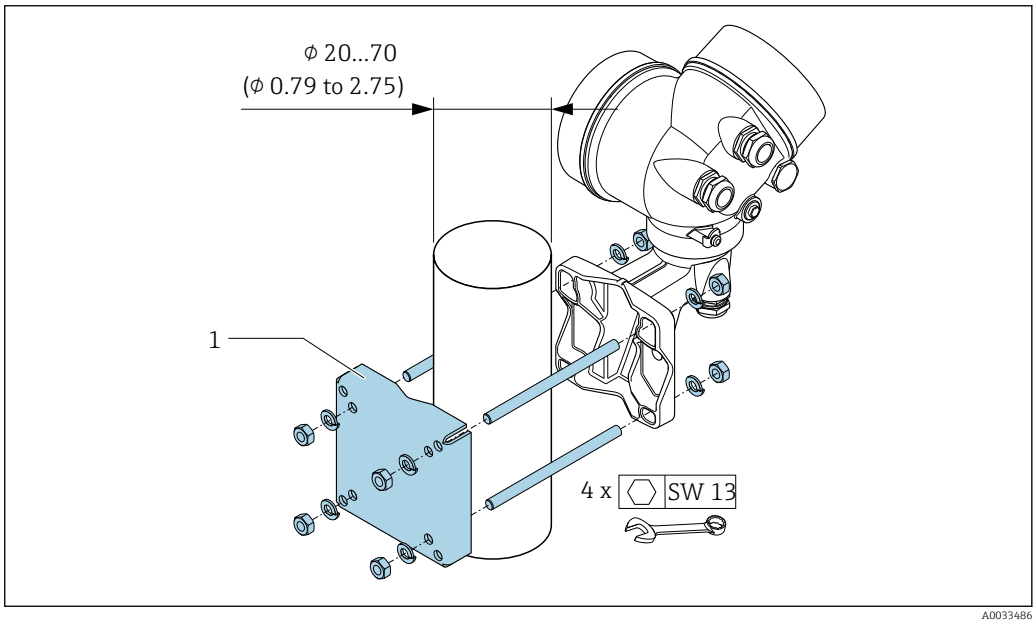

8 *mm (in)*

6.2.5 Turning the transmitter housing

To provide easier access to the connection compartment or display module, the transmitter housing can be turned.

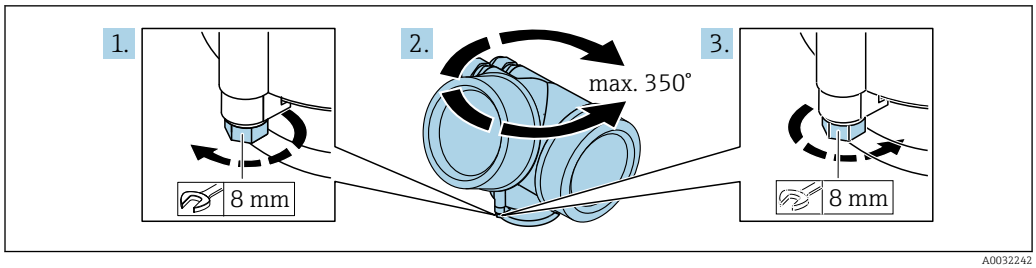

A0032242

1. Loosen the securing screw.
2. Turn the housing to the desired position.
3. Firmly tighten the securing screw.

6.2.6 Turning the display module

The display module can be turned to optimize display readability and operability.

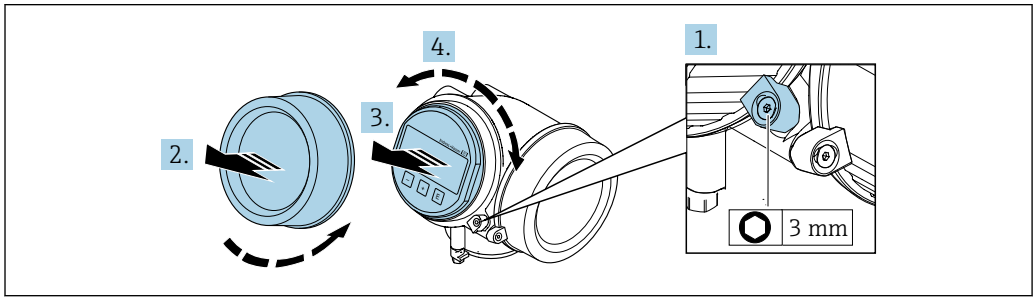

A0032238

1. Loosen the securing clamp of the electronics compartment cover using an Allen key.
2. Unscrew cover of the electronics compartment from the transmitter housing.
3. Optional: pull out the display module with a gentle rotational movement.
4. Turn the display module to the desired position: Max. 8 × 45 ° in each direction.
5. Without display module pulled out:
   Allow display module to engage at desired position.
6. With display module pulled out:
   Feed the cable into the gap between the housing and main electronics module and plug the display module into the electronics compartment until it engages.
7. Reassemble the transmitter in the reverse order.

6.3 Post-mounting check

Is the device undamaged (visual inspection)?	❑
Does the measuring instrument correspond to the measuring point specifications? For example: ▪ Process temperature ▪ Process pressure (refer to the section on "Pressure/temperature ratings" in the "Technical Information" document) ▪ Ambient temperature ▪ Measuring range → 142	❑
Has the correct orientation been selected for the sensor → 19? ▪ According to sensor type ▪ As per medium temperature ▪ As per medium properties (outgassing, with entrained solids)	❑
Does the arrow on the sensor match the direction of flow of the medium → 19?	❑

Is the tag name and labeling correct (visual inspection)?	❑
Is the device sufficiently protected from precipitation and direct sunlight?	❑
Are the securing screw and securing clamp tightened securely?	❑
Has the maximum permitted insulation height been observed?	❑

7 Electrical connection

7.1 Electrical safety

In accordance with applicable national regulations.

7.2 Connecting requirements

7.2.1 Required tools

- For cable entries: Use corresponding tools
- For securing clamp: Allen key 3 mm
- Wire stripper
- When using stranded cables: Crimper for wire end ferrule
- For removing cables from terminal: Flat blade screwdriver ≤ 3 mm (0.12 in)

7.2.2 Requirements for connection cable

The connecting cables provided by the customer must fulfill the following requirements.

Permitted temperature range

- The installation guidelines that apply in the country of installation must be observed.
- The cables must be suitable for the minimum and maximum temperatures to be expected.

Cable diameter

- Cable glands supplied:
  M20 × 1.5 with cable Φ 6 to 12 mm (0.24 to 0.47 in)
- Plug-in spring terminals for device version without integrated overvoltage protection: wire cross-sections 0.5 to 2.5 mm^2 (20 to 14 AWG)

7.2.3 Connecting cable for remote version

Connecting cable (standard)

Standard cable	2 × 2 × 0.5 mm^2 (22 AWG) PVC cable with common shield (2 pairs, pair-stranded) [1]
Flame resistance	According to DIN EN 60332-1-2
Oil resistance	According to DIN EN 60811-2-1
Shielding	Galvanized copper-braid, opt. density approx. 85 %
Cable length	5 m (15 ft), 10 m (30 ft), 20 m (60 ft), 30 m (90 ft)
Continuous operating temperature	When mounted in a fixed position: −50 to +105 °C (−58 to +221 °F); when cable can move freely: −25 to +105 °C (−13 to +221 °F)

1) UV radiation may cause damage to the outer jacket of the cable. Protect the cable from exposure to sun as much as possible.

Connecting cable (armored)

Cable, armored	2 × 2 × 0.34 mm^2 (22 AWG) PVC cable with common shield (2 pairs, pair-stranded) and additional steel-wire braided sheath [1)]
Flame resistance	According to DIN EN 60332-1-2
Oil resistance	According to DIN EN 60811-2-1
Shielding	Galvanized copper-braid, opt. density approx. 85%
Strain relief and reinforcement	Steel-wire braid, galvanized
Cable length	10 m (30 ft), 20 m (60 ft), 30 m (90 ft)
Continuous operating temperature	When mounted in a fixed position: −50 to +105 °C (−58 to +221 °F); when cable can move freely: −25 to +105 °C (−13 to +221 °F)

1) UV radiation may cause damage to the outer jacket of the cable. Protect the cable from exposure to sun as much as possible.

7.2.4 Terminal assignment

Transmitter

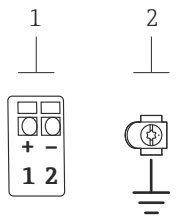

Maximum number of terminals	*Maximum number of terminals for the order code for "Accessory mounted"*
1 Output 1 (passive): supply voltage and signal transmission *2 Ground terminal for cable shield*	

Order code for "Output"	Terminal numbers					
	Output 1		Output 2		Input	
	1 (+)	2 (-)	3 (+)	4 (-)	5 (+)	6 (-)
Option **T**	Modbus TCP over Ethernet-APL/SPE, 10 Mbit/s		-		-	

7.2.5 Modbus TCP over Ethernet-APL 10 Mbit/s

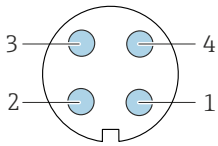

Pin	Assignment	Coding	Plug/socket
1	Ethernet-APL signal -	A	Socket
2	Ethernet-APL signal +		
3	Cable shield[1]		
4	Not used		
Metal plug housing	Cable shield		
[1]If a cable shield is used			

7.2.6 Shielding and grounding

Optimal electromagnetic compatibility (EMC) of the fieldbus system can be guaranteed only if the system components and, in particular, the lines are shielded and the shield forms as complete a cover as possible.

1. To ensure optimal EMC protection, connect the shield to the reference ground as often as possible.
2. For reasons concerning explosion protection, it is recommended that grounding be dispensed with.

To comply with both requirements, there are basically three different types of shielding in the fieldbus system:
- Shielding at both ends
- Shielding at one end on the feed side with capacitance termination at the field device
- Shielding at one end on the feed side

Experience shows that the best results with regard to EMC are achieved in most cases in installations with one-sided shielding on the feed side (without capacitance termination at the field device). Appropriate measures with regard to input wiring must be taken to allow unrestricted operation when EMC interference is present. These measures have been taken into account for this device. Operation in the event of disturbance variables as per NAMUR NE21 is thus guaranteed.

1. Observe national installation requirements and guidelines during installation.
2. Where there are large differences in potential between the individual grounding points,
   connect only one point of the shielding directly to the reference ground.
3. In systems without potential equalization,
   the cable shielding of fieldbus systems should be grounded on one side only, for example at the fieldbus supply unit or at safety barriers.

NOTICE

In systems without potential matching, the multiple grounding of the cable shield causes mains frequency equalizing currents!
Damage to the bus cable shield.
- ▶ Only ground the bus cable shield to either the local ground or the protective ground at one end.
- ▶ Insulate the shield that is not connected.

7.2.7 Requirements for the supply unit

Supply voltage

Transmitter

The following supply voltage values apply for the outputs available:

Supply voltage for a compact version

Order code for "Output; input"	Minimum Terminal voltage	Maximum Terminal voltage
Option **T** : Modbus TCP over Ethernet-APL/SPE, 10 Mbit/s	≥ DC 9 V	DC 30 V

Transient overvoltage: Up to overvoltage category I

7.2.8 Preparing the measuring instrument

Carry out the steps in the following order:

1. Mount the sensor and transmitter.
2. Sensor connection housing: Connect connecting cable.
3. Transmitter: Connect connecting cable.
4. Transmitter: Connect cable for supply voltage.

NOTICE

Insufficient sealing of the housing!

Operational reliability of the measuring device could be compromised.

- Use suitable cable glands corresponding to the degree of protection.

1. Remove dummy plug if present.
2. If the measuring instrument is supplied without cable glands:
   Provide suitable cable gland for corresponding connecting cable.
3. If the measuring instrument is supplied with cable glands:
   Observe requirements for connecting cables → 30.

7.3 Connecting the device

NOTICE

An incorrect connection compromises electrical safety!

- Only properly trained specialist staff may perform electrical connection work.
- Observe applicable federal/national installation codes and regulations.
- Comply with local workplace safety regulations.
- Always connect the protective ground cable ⏚ before connecting additional cables.
- When using in potentially explosive atmospheres, observe the information in the device-specific Ex documentation.
- The power unit must be safety-approved (e.g. SELV/PELV Class 2 limited power).

7.3.1 Connecting the compact version

Connecting the transmitter

Connection via terminals

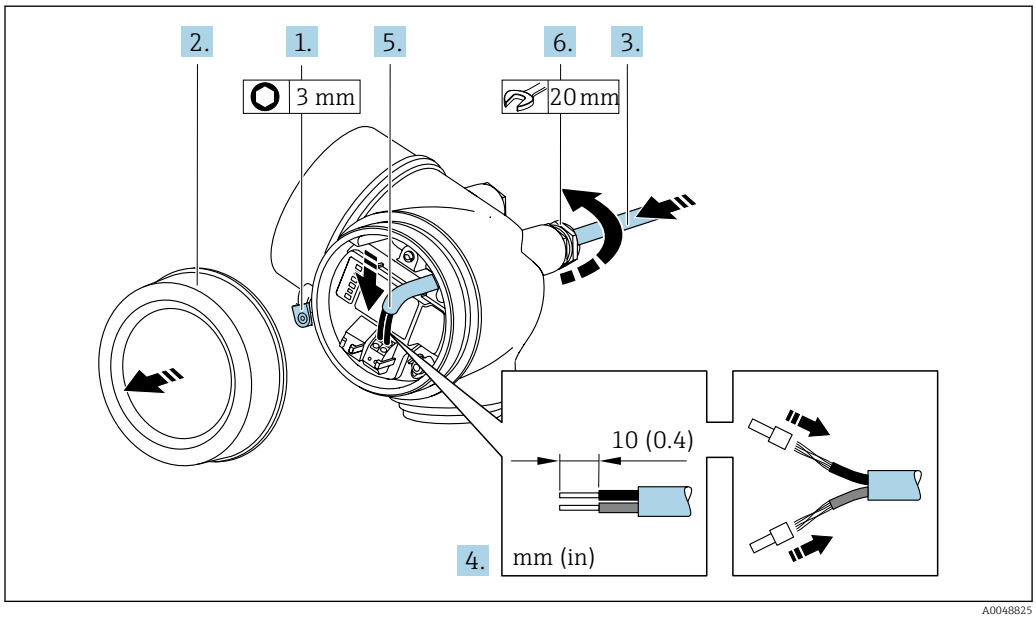

1. Loosen the securing clamp of the connection compartment cover.
2. Unscrew the connection compartment cover.
3. Push the cable through the cable entry . To ensure tight sealing, do not remove the sealing ring from the cable entry.
4. Strip the cable and cable ends. In the case of stranded cables, also fit wire end ferrules.
5. **NOTICE**

   Housing degree of protection voided due to insufficient sealing of the housing.

   ▶ Screw in the screw without using any lubricant. The threads on the cover are coated with a dry lubricant.

   Firmly tighten the cable glands.
6. Reassemble the transmitter in the reverse order.

Removing a cable

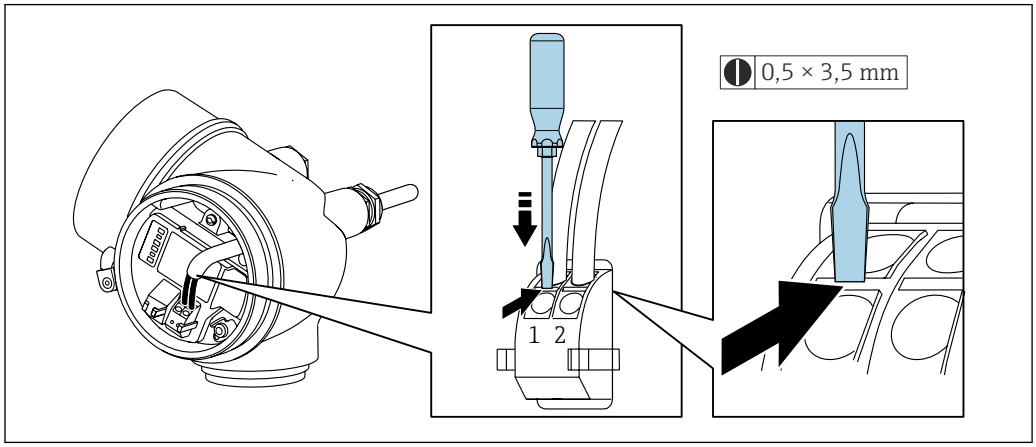

▶ To remove a cable from the terminal, use a flat-blade screwdriver to push the slot between the two terminal holes while simultaneously pulling the cable end out of the terminal.

7.3.2 Connecting the remote version

NOTICE

Risk of damaging the electronic components!

- ▶ Connect the sensor and transmitter to the same potential equalization.
- ▶ Only connect the sensor to a transmitter with the same serial number.

The following sequence of steps is recommended for the remote version:

1. Mount the sensor and transmitter.
2. Connect the connecting cable of the remote version.
3. Connect the transmitter.

How the connecting cable is connected in the transmitter housing depends on the measuring instrument approval and the version of the connecting cable used.

In the following versions, only terminals can be used for connection in the transmitter housing:
- Order code for "Electrical connection", option B, C, D, 6
- Certain approvals: Ex nA, Ex ec, Ex tb and Division 1
- Use of reinforced connecting cable

In the following versions, an M12 device connector is used for connection in the transmitter housing:
- All other approvals
- Use of connecting cable (standard)

Terminals are always used to connect the connecting cable in the sensor connection housing (tightening torques for screws for cable strain relief: 1.2 to 1.7 Nm).

Connecting the sensor connection housing

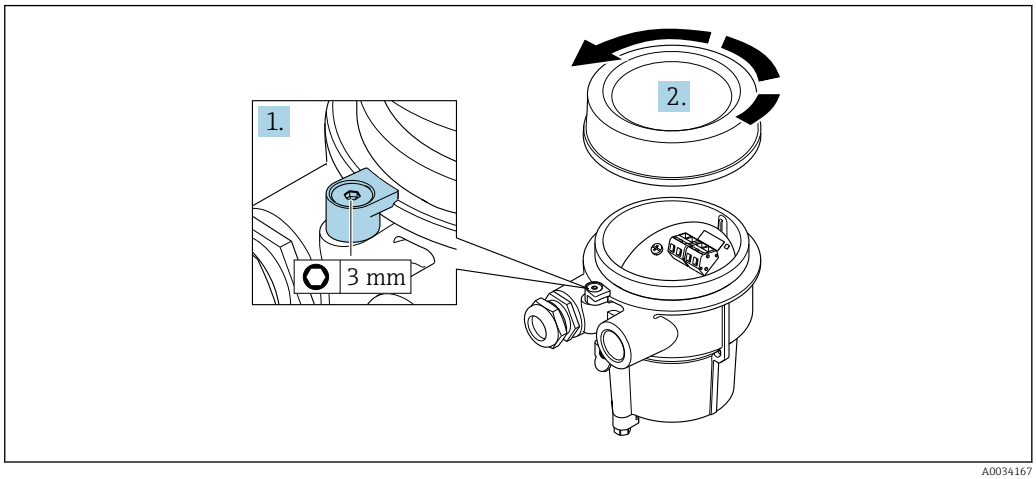

A0034167

1. Loosen the securing clamp.
2. Unscrew the housing cover.

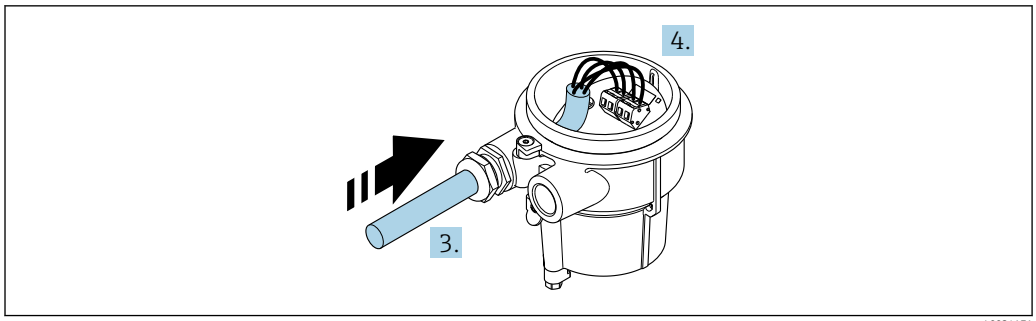

9 *Sample graphic*

Connecting cable (standard, reinforced)

3. Guide the connecting cable through the cable entry and into the connection housing (if using a connecting cable without an M12 device plug, use the shorter stripped end of the connecting cable).
4. Wire the connecting cable:
   ↳ Terminal 1 = brown cable
   Terminal 2 = white cable
   Terminal 3 = yellow cable
   Terminal 4 = green cable
5. Connect the cable shield via the cable strain relief.
6. Tighten the screws for the cable strain relief using a torque in the range of 1.2 to 1.7 Nm.
7. Reverse the removal procedure to reassemble the connection housing.

Connecting cable (option "mass pressure-/temperature-compensated")

3. Guide the connecting cable through the cable entry and into the connection housing (if using a connecting cable without an M12 device plug, use the shorter stripped end of the connecting cable).
4. Wire the connecting cable:
   ↳ Terminal 1 = brown cable
   Terminal 2 = white cable
   Terminal 3 = green cable
   Terminal 4 = red cable
   Terminal 5 = black cable
   Terminal 6 = yellow cable
   Terminal 7 = blue cable
5. Connect the cable shield via the cable strain relief.
6. Tighten the screws for the cable strain relief using a torque in the range of 1.2 to 1.7 Nm.
7. Reverse the removal procedure to reassemble the connection housing.

Connecting the transmitter

Connecting transmitter via plug

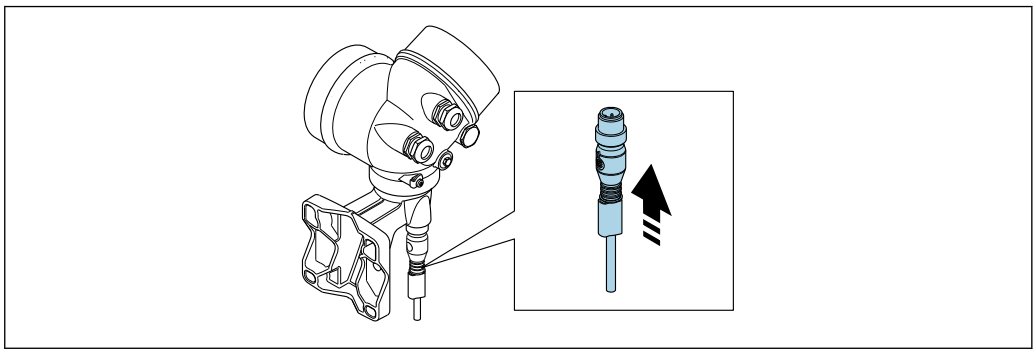

A0034172

- Connect the plug.

Connecting transmitter via terminals

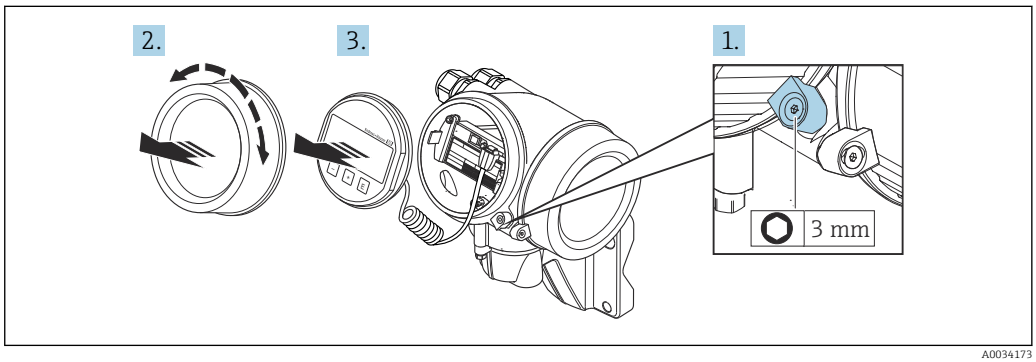

A0034173

1. Loosen the securing clamp of the electronics compartment cover.
2. Unscrew the electronics compartment cover.
3. Pull out the display module with a gentle rotational movement. To make it easier to access the lock switch, attach the display module to the edge of the electronics compartment.

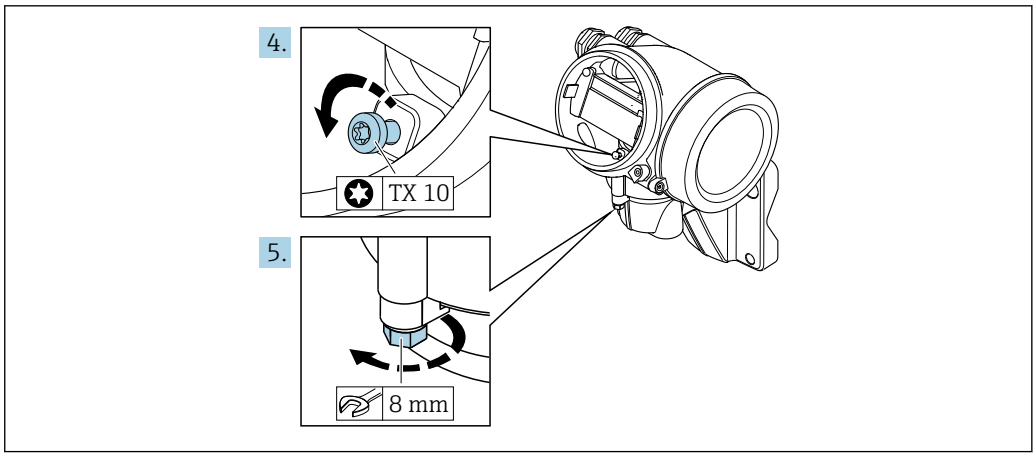

A0034174

4. Loosen the locking screw of the transmitter housing.
5. Loosen the securing clamp of the transmitter housing.

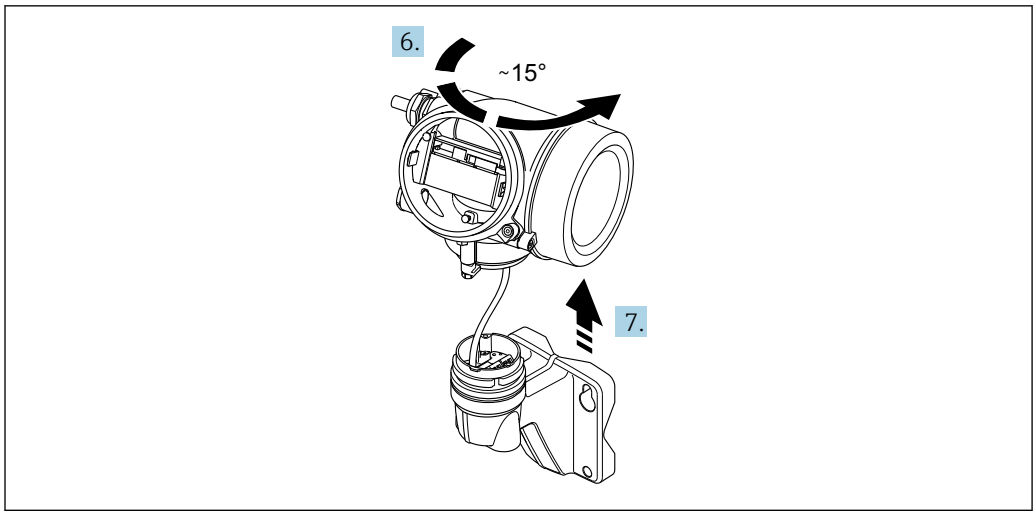

10 *Sample graphic*

6. Turn the transmitter housing to the right until it reaches the marking.

7. NOTICE

The connection board of the wall housing is connected to the electronics board of the transmitter via a signal cable!

- Pay attention to the signal cable when lifting the transmitter housing!

Lift the transmitter housing.

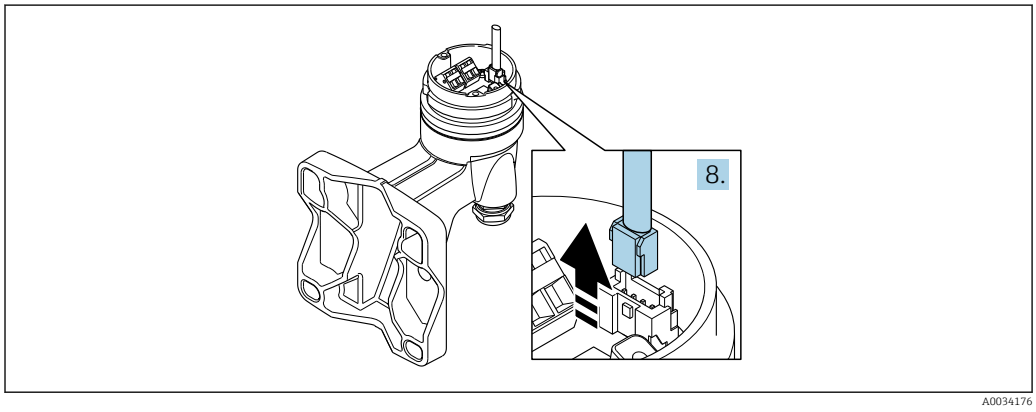

11 *Sample graphic*

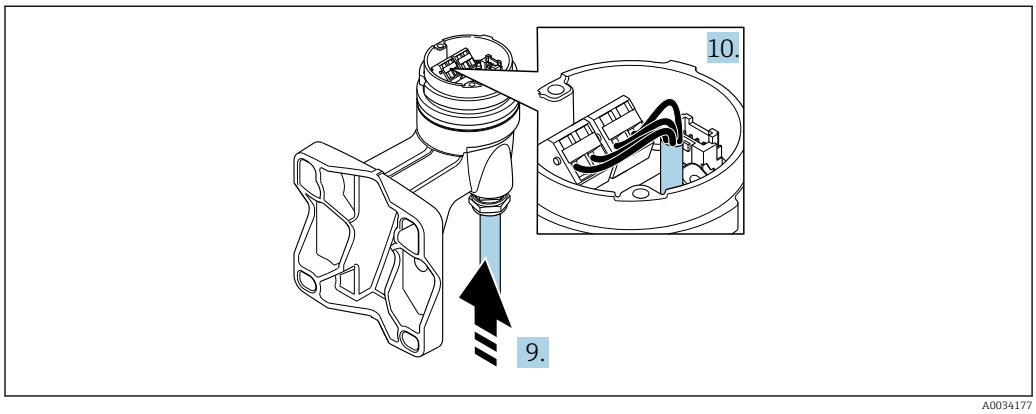

12 *Sample graphic*

Connecting cable (standard, reinforced)

8. Disconnect the signal cable from the connection board of the wall housing . by pressing in the locking clip on the connector. Remove the transmitter housing.
9. Guide the connecting cable through the cable entry and into the connection housing (if using a connecting cable without an M12 device plug, use the shorter stripped end of the connecting cable).
10. Wire the connecting cable:
    ↳ Terminal 1 = brown cable
    Terminal 2 = white cable
    Terminal 3 = yellow cable
    Terminal 4 = green cable
11. Connect the cable shield via the cable strain relief.
12. Tighten the screws for the cable strain relief using a torque in the range of 1.2 to 1.7 Nm.
13. Reverse the removal procedure to reassemble the transmitter housing.

Connecting cable (option "mass pressure-/temperature-compensated")

8. Disconnect both signal cables from the connection board of the wall housing. by pressing in the locking clip on the connector. Remove the transmitter housing.
9. Guide the connecting cable through the cable entry and into the connection housing (if using a connecting cable without an M12 device plug, use the shorter stripped end of the connecting cable).
10. Wire the connecting cable:
    ↳ Terminal 1 = brown cable
    Terminal 2 = white cable
    Terminal 3 = green cable
    Terminal 4 = red cable
    Terminal 5 = black cable
    Terminal 6 = yellow cable
    Terminal 7 = blue cable
11. Connect the cable shield via the cable strain relief.
12. Tighten the screws for the cable strain relief using a torque in the range of 1.2 to 1.7 Nm.
13. Reverse the removal procedure to reassemble the transmitter housing.

7.4 Potential equalization

7.4.1 Requirements

For potential equalization:
- Pay attention to in-house grounding concepts
- Take account of operating conditions like the pipe material and grounding
- Connect the medium , sensor and transmitter to the same electric potential.
- Use a ground cable with a minimum cross-section of 6 mm^2 (10 AWG) and a cable lug for potential equalization connections.

7.5 Activating and deactivating the default IP address

7.5.1 Activating and deactivating the default IP address via the DIP switch

Risk of electric shock when opening the transmitter housing
▶ Disconnect the device from the power supply before opening the transmitter housing.

1. Depending on the housing version, loosen the securing clamp or fixing screw of the housing cover.
2. Depending on the housing version, unscrew or open the housing cover and disconnect the local display from the main electronics module where necessary → 📄 164.
3. DIP switch (Fix IP) no. 2 on the I/O electronics module from **OFF** → **ON**.
   ↳ The default IP address is activated.
4. Restart the device.
   ↳ The device can be used with the default IP address 192.168.1.212.
5. DIP switch (Fix IP) no. 2 on the I/O electronics module from **ON** → **OFF**.
   ↳ The default IP address is disactivated.
6. Restart the device.
7. Reassemble the transmitter in the reverse order.
8. Reconnect the device to the power supply.
   ↳ Once the device has been restarted, the default IP address is reactivated and the original default IP address is used.

7.6 Ensuring the degree of protection

The measuring instrument fulfills all the requirements for the degree of protection IP66/67, Type 4X enclosure.

To guarantee the degree of protection IP66/67, Type 4X enclosure, carry out the following steps after the electrical connection:

1. Check that the housing seals are clean and fitted correctly.
2. Dry, clean or replace the seals if necessary.
3. Tighten all housing screws and screw covers.
4. Firmly tighten the cable glands.
5. To ensure that moisture does not enter the cable entry:
   Route the cable so that it loops down before the cable entry ("water trap").
   ↳

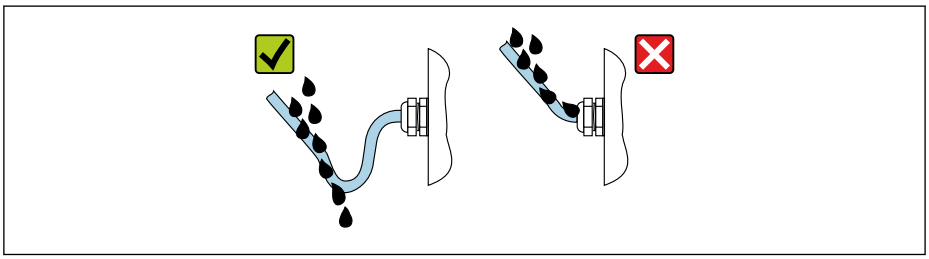

A0029278

6. The supplied cable glands and plastic dummy plugs, which are used for the threaded cable entries, do not guarantee the degree of protection IP66/67, Type 4X enclosure. To achieve this degree of protection, cable glands and plastic dummy plugs that are not used must be replaced by threaded dummy plugs with the degree of protection IP66/67, Type 4x enclosure.

Type 4X is not provided if pressure measuring cell is used.

7.7 Post-connection check

Are the device and cable undamaged (visual inspection)?	❑
Do the cables used comply with the requirements → 🗎 30?	❑
Are the mounted cables strain relieved?	❑
Are all cable glands installed, securely tightened and leak-tight? Cable run with "water trap" → 🗎 40?	❑
Depending on the device version: are all the device plugs firmly tightened → 🗎 33?	❑
Only for remote version: ▪ Is the sensor connected to the right transmitter? ▪ Check the serial number on the nameplate of the sensor and transmitter.	❑
Does the supply voltage match the specifications on the transmitter nameplate ?	❑
Is the terminal assignment correct ?	❑
If supply voltage is present, do values appear on the display module?	❑
Are all housing covers installed and firmly tightened?	❑
Is the securing clamp securely tightened?	❑
Have the screws for the cable strain relief been tightened using the correct tightening torque→ 🗎 35?	❑

8 Operation options

8.1 Overview of operation options

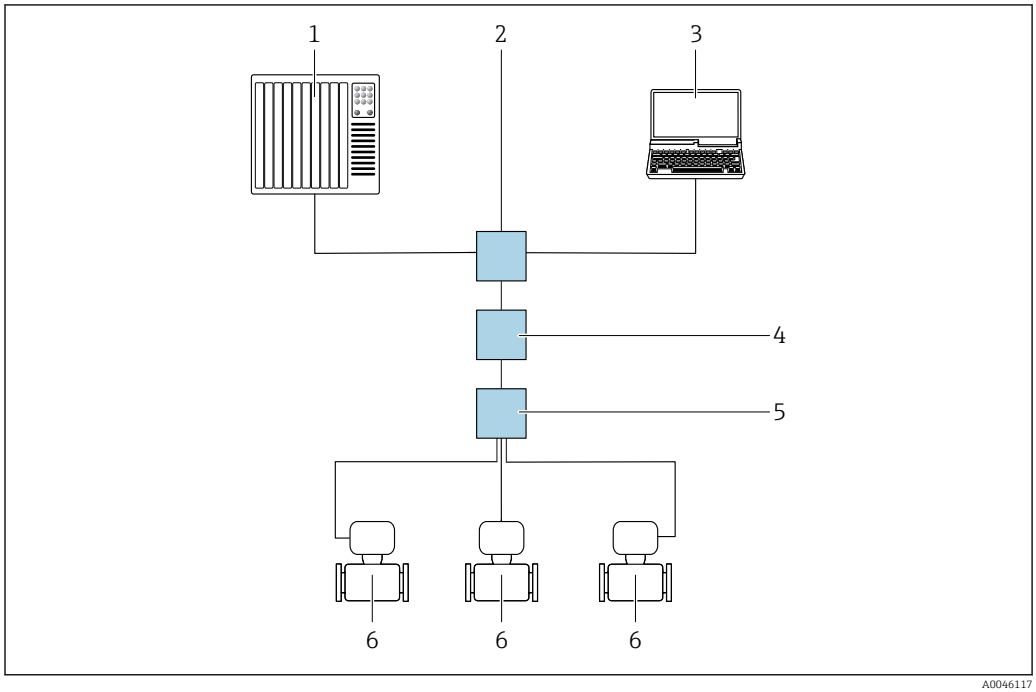

1 *Automation system, e.g. Simatic S7 (Siemens)*
2 *Standard Ethernet switch, e.g. Scalance X204 (Siemens)*
3 *Computer with web browser or with operating tool (e.g FieldCare, DeviceCare, SIMATIC PDM)*
4 *APL power switch (optional)*
5 *APL field switch*
6 *Measuring instrument*

8.2 Structure and function of the operating menu

8.2.1 Structure of the operating menu

For an overview of the operating menu for experts: see the "Description of Device Parameters" document supplied with the device

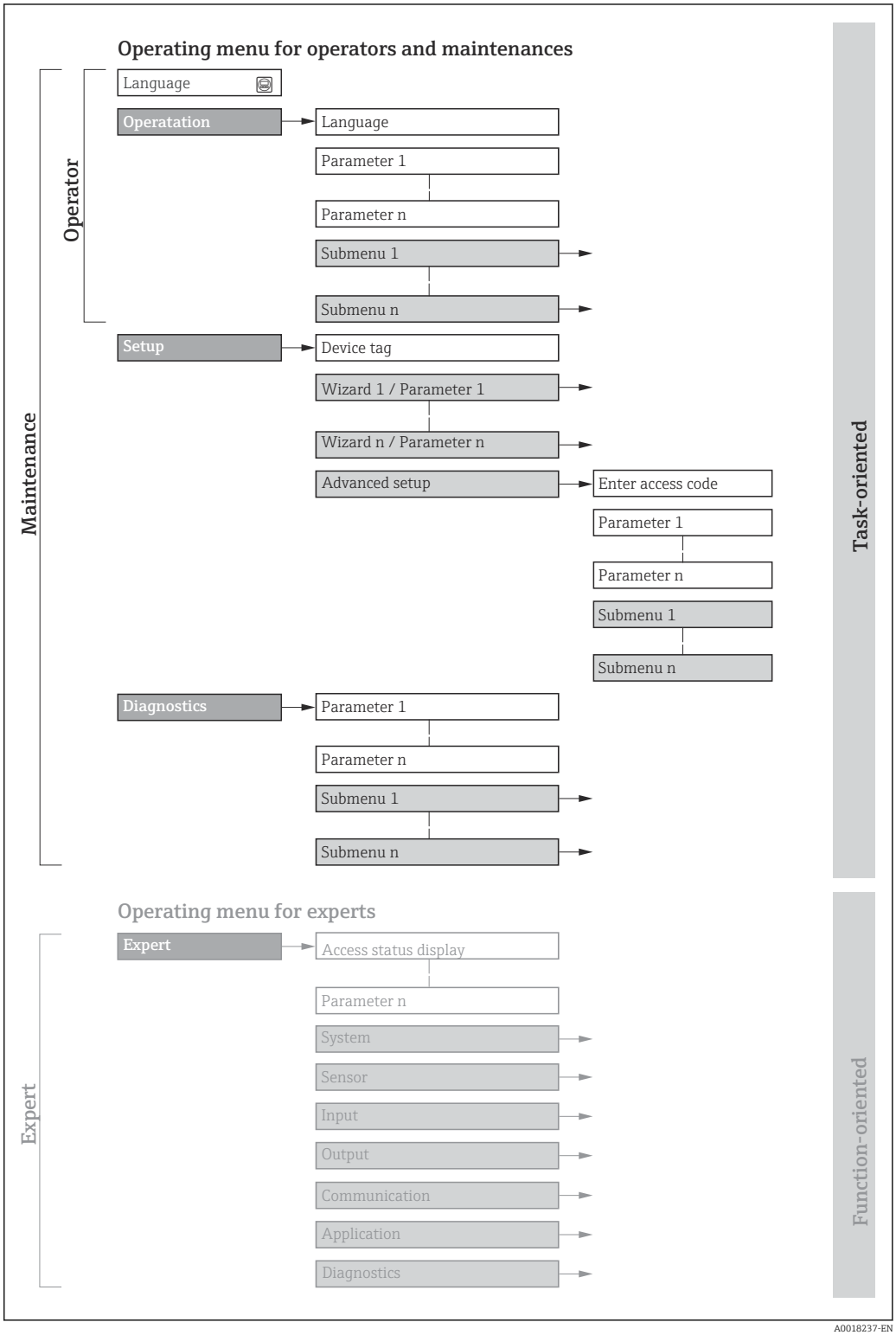

13 *Schematic structure of the operating menu*

8.2.2 Operating philosophy

The individual parts of the operating menu are assigned to certain user roles (e.g. operator, maintenance etc.). Each user role contains typical tasks within the device life cycle.

Menu/parameter		User role and tasks	Content/meaning
Language	Task-oriented	**Role "Operator", "Maintenance"** Tasks during operation: ▪ Configuring the operational display ▪ Reading measured values	Defining the operating language
Operation			▪ Defining the operating language ▪ Resetting and controlling totalizers ▪ Configuring the operational display (e.g. display format, display contrast) ▪ Resetting and controlling totalizers
Setup		**"Maintenance" role** Commissioning: ▪ Configuring the measurement ▪ Configuring the inputs and outputs	Wizard for quick commissioning: ▪ Configuring the system units ▪ Defining the medium ▪ Configuring the current input ▪ Configuring the outputs ▪ Configuring the operational display ▪ Defining the output conditioning ▪ Configuring the low flow cut off Advanced setup ▪ For more customized configuration of the measurement (adaptation to special measuring conditions) ▪ Configuring totalizers ▪ Administration (define access code, reset measuring instrument)
Diagnostics		**"Maintenance" role** Troubleshooting: ▪ Diagnostics and elimination of process and device errors ▪ Measured value simulation	Contains all parameters for error detection and analyzing process and device errors: ▪ Diagnostic list Contains up to 5 currently pending diagnostic messages. ▪ Event logbook Contains event messages that have occurred. ▪ Device information Contains information for identifying the device. ▪ Measured values Contains all current measured values. ▪ **Data logging** submenu with the "Extended HistoROM" order option Storage and visualization of measured values ▪ Heartbeat Technology The functionality of the device is checked on demand and the verification results are documented. ▪ Simulation Used to simulate measured values or output values. ▪ Testpoints
Expert	Function-oriented	Tasks that require detailed knowledge of the function of the device: ▪ Commissioning measurements under difficult conditions ▪ Optimal adaptation of the measurement to difficult conditions ▪ Detailed configuration of the communication interface ▪ Error diagnostics in difficult cases	Contains all the parameters of the device and makes it possible to access these parameters directly using an access code. The structure of this menu is based on the function blocks of the device: ▪ System Contains all higher-level device parameters that do not affect measurement or measured value communication. ▪ Sensor Configuring the measurement. ▪ Communication Configuring the digital communication interface. ▪ Application Configuring the functions that go beyond the actual measurement (e.g. totalizer). ▪ Diagnostics Error detection and analysis of process and device errors and for device simulation and the Heartbeat Technology menu.

8.3 Access to operating menu via local display

8.3.1 Operational display

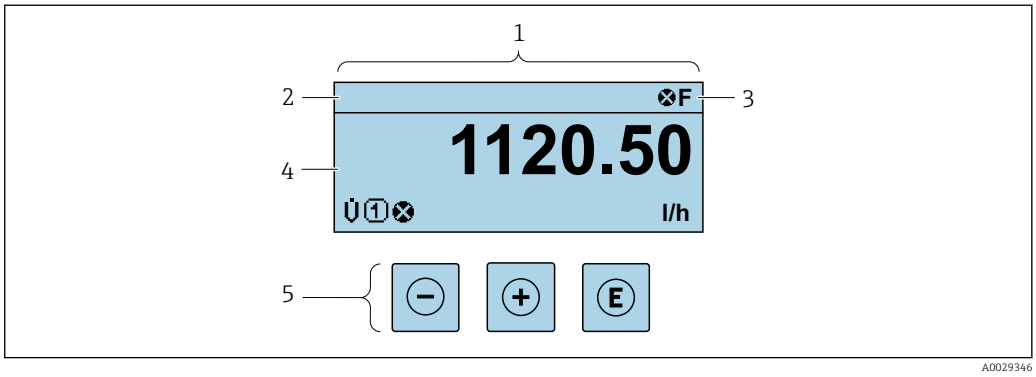

1 *Operational display*
2 *Tag name*
3 *Status area*
4 *Display area for measured values (up to 4 lines)*
5 *Operating elements → 📄 50*

Status area

The following symbols appear in the status area of the operational display at the top right:
- Status signals→ 📄 122
  - **F**: Failure
  - **C**: Function check
  - **S**: Out of specification
  - **M**: Maintenance required
- Diagnostic behavior→ 📄 123
  - ⊗: Alarm
  - ⚠: Warning
- 🔒: Locking (the device is locked via the hardware)
- ⇆: Communication (communication via remote operation is active)

Display area

In the display area, each measured value is prefaced by certain symbol types for further description:

Measured variables

Symbol	Meaning
U̇	Volume flow

ℹ The number and display format of the measured variables can be configured via the **Format display** parameter (→ 📄 73).

Totalizer

Symbol	Meaning
Σ	Totalizer ℹ The measurement channel number indicates which of the three totalizers is displayed.

Measurement channel numbers

Symbol	Meaning
1 ... 4	Measurement channel 1 to 4 The measurement channel number is displayed only if more than one channel is present for the same measured variable type (e.g. Totalizer 1 to 3).

Diagnostic behavior

Symbol	Meaning
⊗	**Alarm** ▪ Measurement is interrupted. ▪ Signal outputs and totalizers assume the defined alarm condition. ▪ A diagnostic message is generated. ▪ For local display with touch control: the background lighting changes to red.
⚠	**Warning** ▪ Measurement is resumed. ▪ The signal outputs and totalizers are not affected. ▪ A diagnostic message is generated.

The diagnostic behavior pertains to a diagnostic event that is relevant to the displayed measured variable.

8.3.2 Navigation view

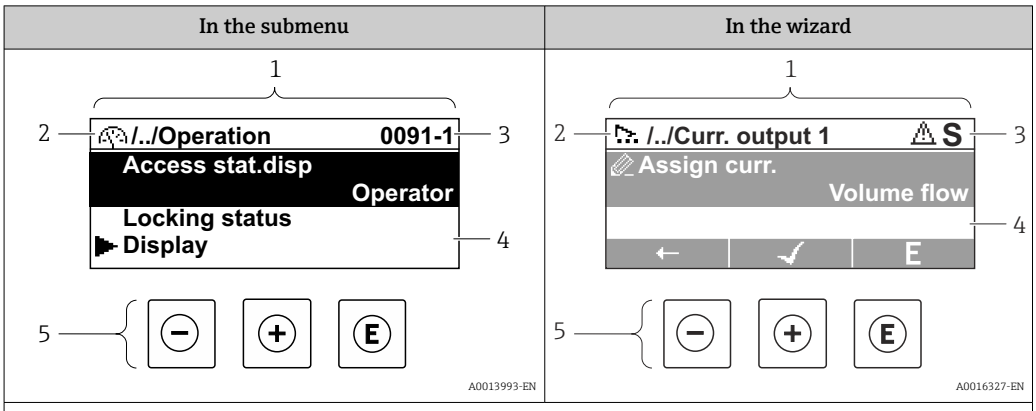

1 *Navigation view*
2 *Navigation path to current position*
3 *Status area*
4 *Display area for navigation*
5 *Operating elements* → 📄 50

Navigation path

The navigation path to the current position is displayed at the top left in the navigation view and consists of the following elements:
- The display symbol for the menu/submenu (▶) or the wizard (⚙).
- An omission symbol (/ ../) for operating menu levels in between.
- Name of the current submenu, wizard or parameter

	Display symbol	Omission symbol	Parameter
	↓	↓	↓
Example	▶	/ ../	Indication

For more information about the icons in the menu, refer to the "Display area" section → 📄 47

Status area

The following appears in the status area of the navigation view in the top right corner:
- In the submenu
  - The direct access code to the parameter (e.g., 0022-1)
  - If a diagnostic event is present, the diagnostic behavior and status signal
- In the wizard
  If a diagnostic event is present, the diagnostic behavior and status signal

- For information on the diagnostic behavior and status signal → 📄 122
- For information on the function and entry of the direct access code → 📄 52

Display area

Menus

Symbol	Meaning
	Operation Is displayed: ▪ In the menu next to the "Operation" selection ▪ At the left in the navigation path in the **Operation** menu

	Setup Is displayed: ▪ In the menu next to the "Setup" selection ▪ At the left in the navigation path in the **Setup** menu
	Diagnosis Is displayed: ▪ In the menu next to the "Diagnostics" selection ▪ At the left in the navigation path in the **Diagnostics** menu
	Expert Is displayed: ▪ In the menu next to the "Expert" selection ▪ At the left in the navigation path in the **Expert** menu

Submenus, wizards, parameters

Symbol	Meaning
	Submenu
	Wizards
	Parameters within a wizard No display symbol exists for parameters in submenus.

Locking procedure

Symbol	Meaning
	Parameter locked When displayed in front of a parameter name, indicates that the parameter is locked. ▪ By a user-specific access code ▪ By the hardware write protection switch

Wizards

Symbol	Meaning
	Switches to the previous parameter.
	Confirms the parameter value and switches to the next parameter.
E	Opens the editing view of the parameter.

8.3.3 Editing view

Numeric editor	Text editor
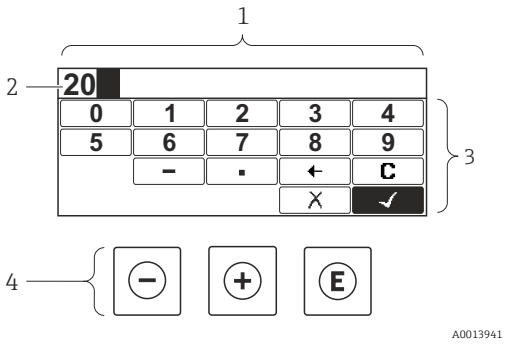	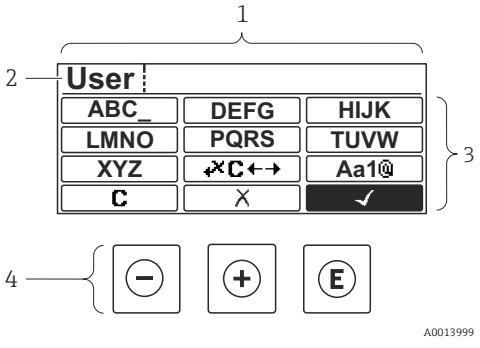

1 *Editing view*
2 *Display area of the entered values*
3 *Input mask*
4 *Operating elements* → 📄 50

Input screen

The following input symbols are available in the input mask of the numeric and text editor:

Numeric editor

Symbol	Meaning
0 … 9	Selection of numbers from 0 to 9
.	Inserts a decimal separator at the cursor position.
–	Inserts a minus sign at the cursor position.
✓	Confirms the selection.
←	Moves the input position one position to the left.
✕	Exits the input without applying the changes.
C	Clears all entered characters.

Text editor

Symbol	Meaning
Aa1@	Toggle ▪ Between upper-case and lower-case letters ▪ For entering numbers ▪ For entering special characters
ABC_ … XYZ	Selection of letters from A to Z.
abc _ … xyz	Selection of letters from a to z.
""^ _ … ~& _	Selection of special characters.
✓	Confirms the selection.
✕C←→	Switches to the selection of the correction tools.
✕	Exits the input without applying the changes.
C	Clears all entered characters.

Text correction under ✕C←→

Symbol	Meaning
C	Clears all entered characters.

	Moves the input position one position to the right.
	Moves the input position one position to the left.
	Deletes one character immediately to the left of the input position.

8.3.4 Operating elements

Operating key	Meaning
⊖	**Minus key** *In menu, submenu* Moves the selection bar upwards in a picklist *In wizards* Goes to previous parameter *In the text and numeric editor* In the input screen, moves the selection bar to the left (backwards)
⊕	**Plus key** *In menu, submenu* Moves the selection bar downwards in a picklist *In wizards* Goes to the next parameter *In the text and numeric editor* In the input screen, moves the selection bar to the right (forwards)

E	**Enter key**
	In the operational display
	Pressing the key for 2 s opens the context menu.
	In menu, submenu
	▪ Pressing the key briefly:
	  ▪ Opens the selected menu, submenu or parameter.
	  ▪ Starts the wizard.
	  ▪ If help text is open, closes the help text of the parameter.
	▪ Pressing the key for 2 s in a parameter:
	  If present, opens the help text for the function of the parameter.
	In wizards
	Opens the editing view of the parameter and confirms the parameter value
	In the text and numeric editor
	▪ Pressing the key briefly:
	  ▪ Opens the selected group.
	  ▪ Carries out the selected action.
	▪ Pressing the key for 2 s confirms the edited parameter value.

⊖ + ⊕	**Escape key combination (press keys simultaneously)**
	In menu, submenu
	▪ Pressing the key briefly:
	  ▪ Exits the current menu level and takes you to the next higher level.
	  ▪ If help text is open, closes the help text of the parameter.
	▪ Pressing the key for 2 s returns you to the operational display ("home position").
	In wizards
	Exits the wizard and takes you to the next higher level
	In the text and numeric editor
	Closes the text or numeric editor without applying changes.

⊕ + E	**Plus/Enter key combination (press and hold down the keys simultaneously)** Increases the contrast (darker setting).
⊖ + ⊕ + E	**Minus/Plus/Enter key combination (press the keys simultaneously)** *In the operational display* Enables or disables the keypad lock (only SD02 display module).

8.3.5 Opening the context menu

Using the context menu, the user can call up the following menus quickly and directly from the operational display:

- Setup
- Configuration backup display
- Simulation

Calling up and closing the context menu

The user is in the operational display.

1. Press the ⊟ and Ⓔ keys for longer than 3 seconds.
   ↳ The context menu opens.

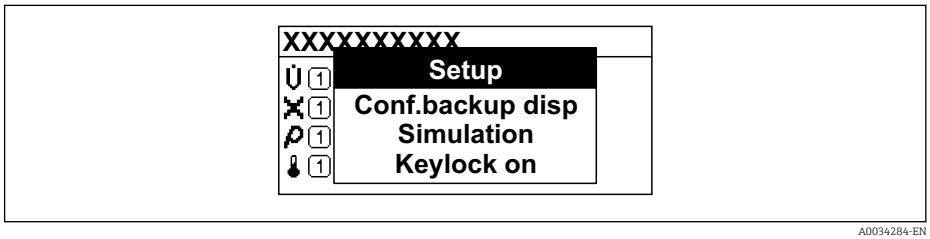

2. Press ⊟ + ⊞ simultaneously.
   ↳ The context menu is closed and the operational display appears.

Calling up the menu via the context menu

1. Open the context menu.
2. Press ⊞ to navigate to the desired menu.
3. Press Ⓔ to confirm the selection.
   ↳ The selected menu opens.

8.3.6 Navigating and selecting from list

Different operating elements are used to navigate through the operating menu. The navigation path is displayed on the left in the header. Icons are displayed in front of the individual menus. These icons are also shown in the header during navigation.

For an explanation of the navigation view with symbols and operating elements → 47

Example: Setting the number of displayed measured values to "2 values"

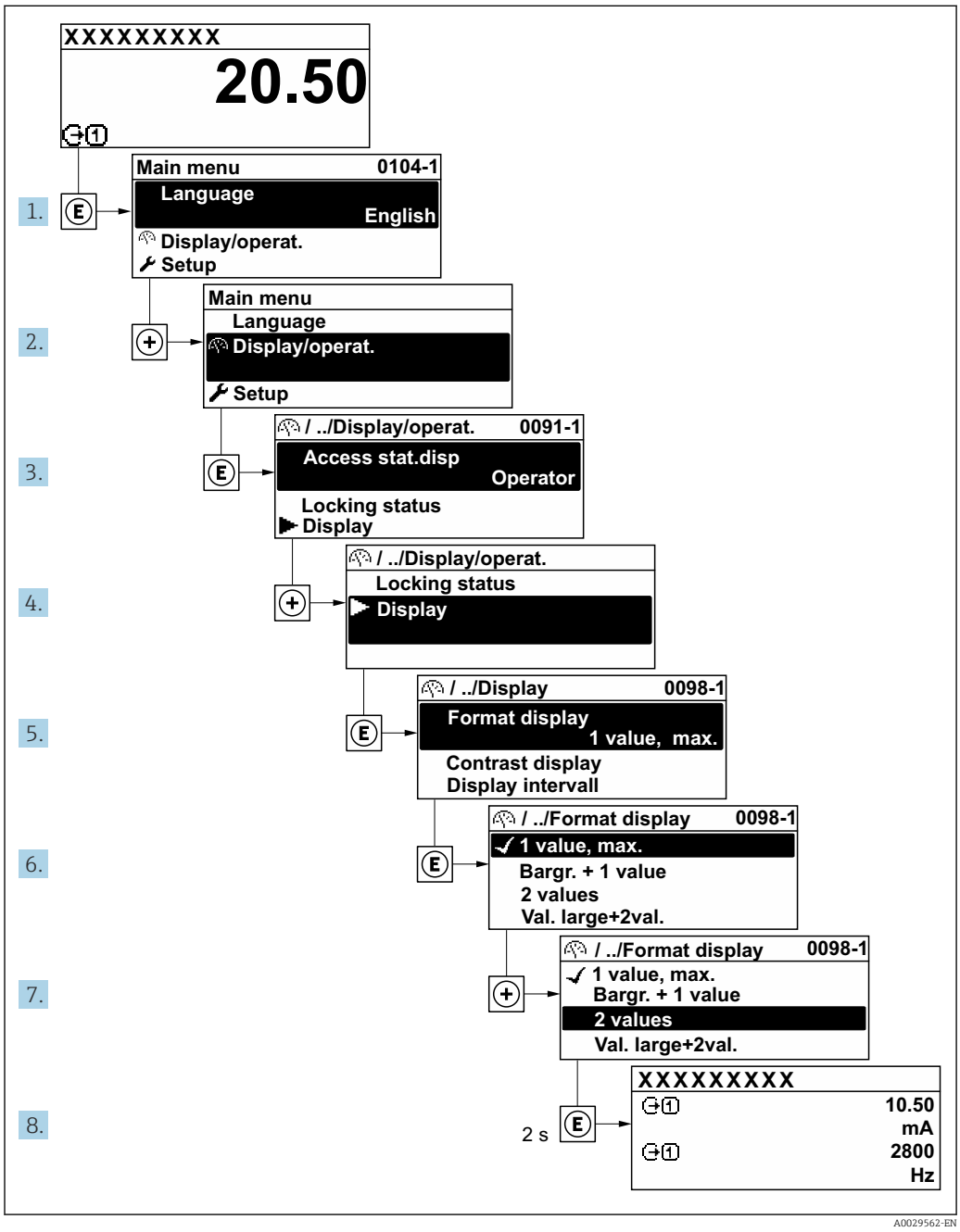

8.3.7 Calling the parameter directly

A parameter number is assigned to every parameter to be able to access a parameter directly via the onsite display. Entering this access code in the **Direct access** parameter calls up the desired parameter directly.

Navigation path
Expert → Direct access

The direct access code consists of a 5-digit number (at maximum) and the channel number, which identifies the channel of a process variable: e.g. 00914-2. In the navigation view, this appears on the right-hand side in the header of the selected parameter.

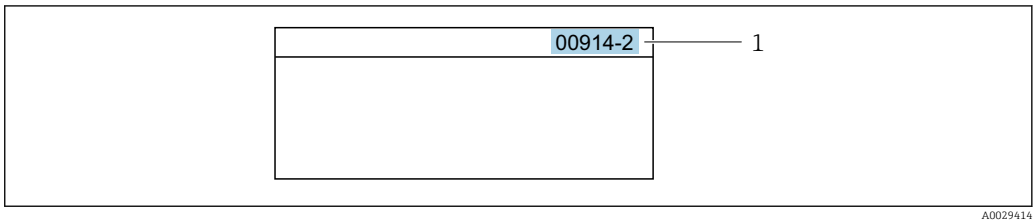

1 Direct access code

Note the following when entering the direct access code:
- The leading zeros in the direct access code do not have to be entered.
  Example: Enter **"914"** instead of **"00914"**
- If no channel number is entered, channel 1 is opened automatically.
  Example: Enter **00914** → **Assign process variable** parameter
- If a different channel is opened: Enter the direct access code with the corresponding channel number.
  Example: Enter **00914-2** → **Assign process variable** parameter

For the direct access codes of the individual parameters, see the "Description of Device Parameters" document for the device

8.3.8 Calling up help text

Help text is available for some parameters and can be called up from the navigation view. The help text provides a brief explanation of the parameter function and thereby supports swift and safe commissioning.

Calling up and closing the help text

The user is in the navigation view and the selection bar is on a parameter.

1. Press E for 2 s.
   ↳ The help text for the selected parameter opens.

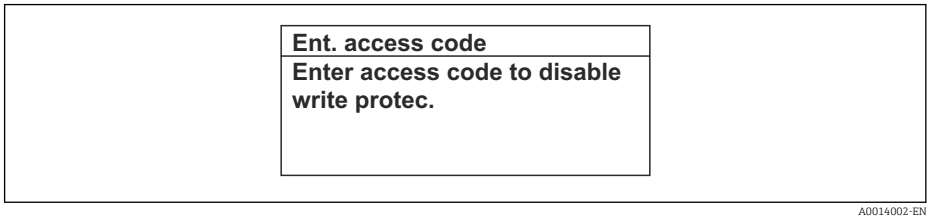

14 Example: Help text for parameter "Enter access code"

2. Press − + + simultaneously.
   ↳ The help text is closed.

8.3.9 Changing the parameters

For a description of the editing view - consisting of the text editor and numeric editor - with symbols → 48, for a description of the operating elements → 50

Example: Changing the tag name in the "Tag description" parameter from 001-FT-101 to 001-FT-102

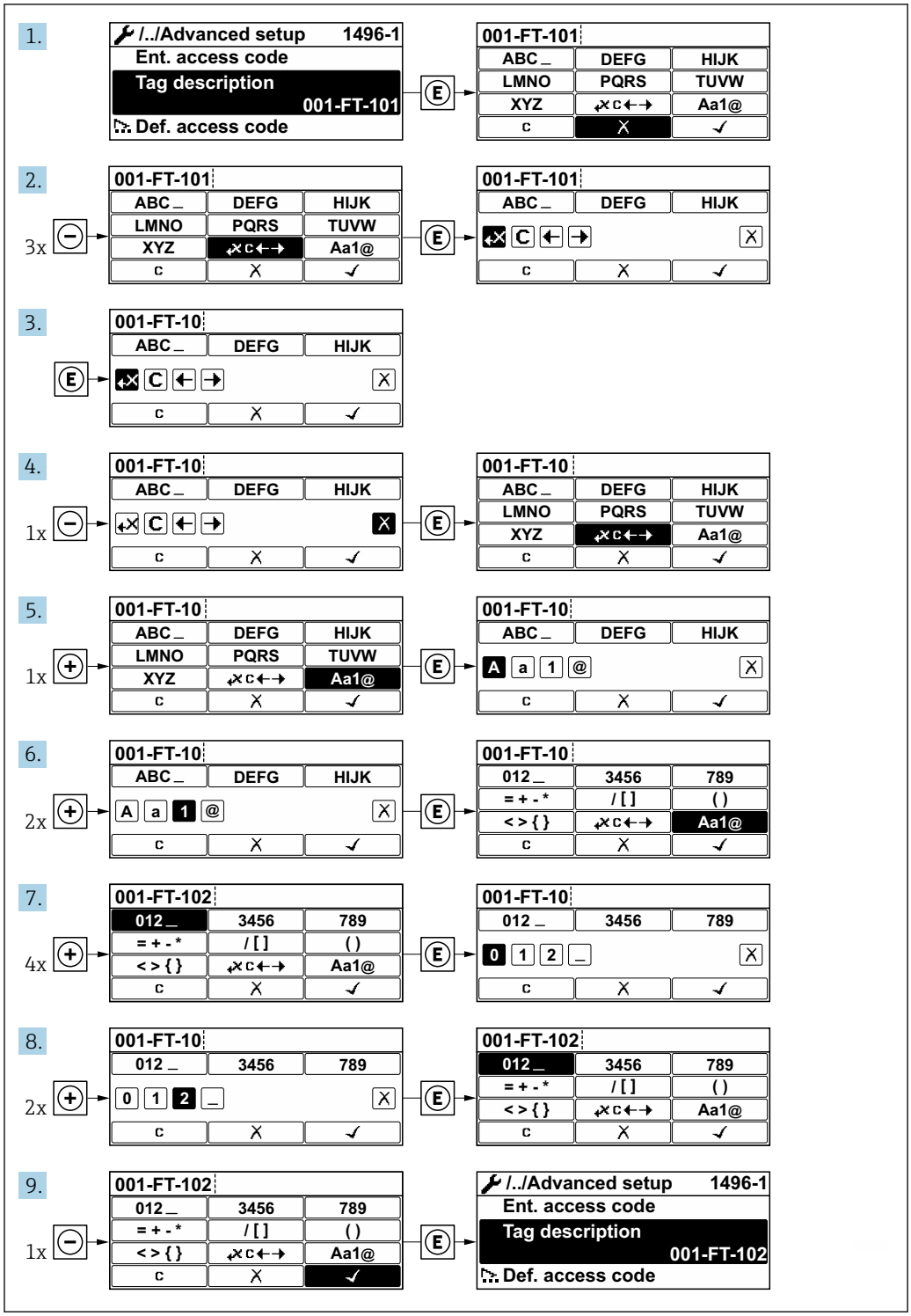

A message is displayed if the value entered is outside the permitted value range.

Ent. access code
Invalid or out of range input value Min:0 Max:9999

A0014049-EN

8.3.10 User roles and related access authorization

The two user roles "Operator" and "Maintenance" have different write access to the parameters if the customer defines a user-specific access code. This protects the device configuration via the local display from unauthorized access .

Defining access authorization for user roles

An access code is not yet defined when the device is delivered from the factory. Access authorization (read and write access) to the device is not restricted and corresponds to the "Maintenance" user role.

- Define the access code.
  - The "Operator" user role is redefined in addition to the "Maintenance" user role. Access authorization differs for the two user roles.

Access authorization to parameters: "Maintenance" user role

Access code status	Read access	Write access
An access code has not yet been defined (factory setting).	✔	✔
After an access code has been defined.	✔	✔ [1]

1) The user only has write access after entering the access code.

Access authorization to parameters: "Operator" user role

Access code status	Read access	Write access
After an access code has been defined.	✔	– [1]

1) Despite the defined access code, certain parameters can always be modified and thus are excluded from the write protection as they do not affect the measurement: write protection via access code

The user role with which the user is currently logged on is indicated by the **Access status display** parameter. Navigation path: Operation → Access status display

8.3.11 Disabling write protection via access code

If the 🔒-symbol appears on the local display in front of a parameter, the parameter is write-protected by a user-specific access code and its value cannot be changed at the moment using local operation → 📄 102.

Parameter write protection via local operation can be disabled by entering the user-specific access code in the **Enter access code** parameter (→ 📄 77) via the respective access option.

1. After you press E, the input prompt for the access code appears.
2. Enter the access code.
   - The 🔒-symbol in front of the parameters disappears; all previously write-protected parameters are now re-enabled.

8.3.12 Enabling and disabling the keypad lock

The keypad lock makes it possible to block access to the entire operating menu via local operation. As a result, it is no longer possible to navigate through the operating menu or change the values of individual parameters. Users can only read the measured values on the operational display.

The keypad lock is switched on and off via the context menu.

Switching on the keypad lock

For the SD03 display only
The keypad lock is switched on automatically:
- If the device has not been operated via the display for > 1 minute.
- Each time the device is restarted.

To activate the keylock manually:

1. The device is in the measured value display.
   Press the ⊟ and Ⓔ keys for 3 seconds.
   ↳ A context menu appears.
2. In the context menu select the **Keylock on** option.
   ↳ The keypad lock is switched on.

If the user attempts to access the operating menu while the keypad lock is active, the **Keylock on** message appears.

Switching off the keypad lock

- The keypad lock is switched on.
  Press the ⊟ and Ⓔ keys for 3 seconds.
  ↳ The keypad lock is switched off.

8.4 Access to operating menu via web browser

8.4.1 Function range

Thanks to the integrated web server, the device can be operated and configured using a web browser via Ethernet-APL. In addition to the measured values, status information on the device is displayed and can be used to monitor device health. Furthermore the device data can be managed and the network parameters can be configured.

Access to the network is required for the APL connection.

8.4.2 Logging on

1. Select the preferred operating language for the Web browser.
2. Enter the user-specific access code.
3. Press **OK** to confirm your entry.

Access code	0000 (factory setting); can be changed by customer

If no action is performed for 10 minutes, the Web browser automatically returns to the login page.

8.4.3 User interface

Header

The following information appears in the header:
- Device name
- Device tag
- Device status with status signal → 125
- Current measured values

Function row

Functions	Meaning
Measured values	Displays the measured values of the measuring instrument
Menu	▪ Access to the operating menu from the measuring instrument ▪ The structure of the operating menu is the same as for the local display Detailed information on the "Description of Device Parameters" operating menu
Device status	Displays the diagnostic messages currently pending, listed in order of priority

Data management	Data exchange between computer and measuring instrument:
	▪ Device configuration:
	  ▪ Load settings from the device (XML format, save configuration)
	  ▪ Save settings to the device (XML format, restore configuration)
	▪ Documents - Export documents:
	  ▪ Export backup data record (.csv file, create documentation of the measuring point configuration)
	  ▪ Verification report (PDF file, only available with the "Heartbeat Verification" module)

Network	Configuration and checking of all the parameters required for establishing the connection to the measuring instrument: ▪ Network settings (e.g. IP address, MAC address) ▪ Device information (e.g. serial number, firmware version)
Logout	End the operation and call up the login page

Navigation area

The menus, the associated submenus and parameters can be selected in the navigation area.

Working area

Depending on the selected function and the related submenus, various actions can be performed in this area:
- Configuring parameters
- Reading measured values
- Calling up help text
- Starting an upload/download

8.4.4 Disabling the Web server

The Web server of the measuring device can be switched on and off as required using the **Web server functionality** parameter.

Navigation
"Expert" menu → Communication → Web server

Parameter overview with brief description

Parameter	Description	Selection	Factory setting
Web server functionality	Switch the Web server on and off.	▪ Off ▪ HTML Off ▪ On	On

Function scope of the "Web server functionality" parameter

Option	Description
Off	▪ The Web server is completely disabled. ▪ Port 80 is locked.
On	▪ The complete Web server functionality is available. ▪ JavaScript is used. ▪ The password is transferred in an encrypted state. ▪ Any change to the password is also transferred in an encrypted state.

Enabling the Web server

If the Web server is disabled it can only be re-enabled with the **Web server functionality** parameter via the following operating options:
- Via Bedientool "FieldCare"
- Via "DeviceCare" operating tool

8.4.5 Logging out

Before logging out, perform a data backup via the **Data management** function (upload configuration from device) if necessary.

1. Select the **Logout** entry in the function row.
   ↳ The home page with the Login box appears.
2. Close the Web browser.
3. If no longer needed:
   Reset the modified properties of the Internet protocol (TCP/IP) .

8.5 Access to the operating menu via the operating tool

The structure of the operating menu in the operating tools is the same as for operation via the local display.

8.5.1 Connecting the operating tool

Via Modbus TCP over Ethernet-APL 10 Mbit/s, SPE 10 Mbit/s

This communication interface is available on port 1 in device versions with a Modbus TCP over Ethernet-APL output.

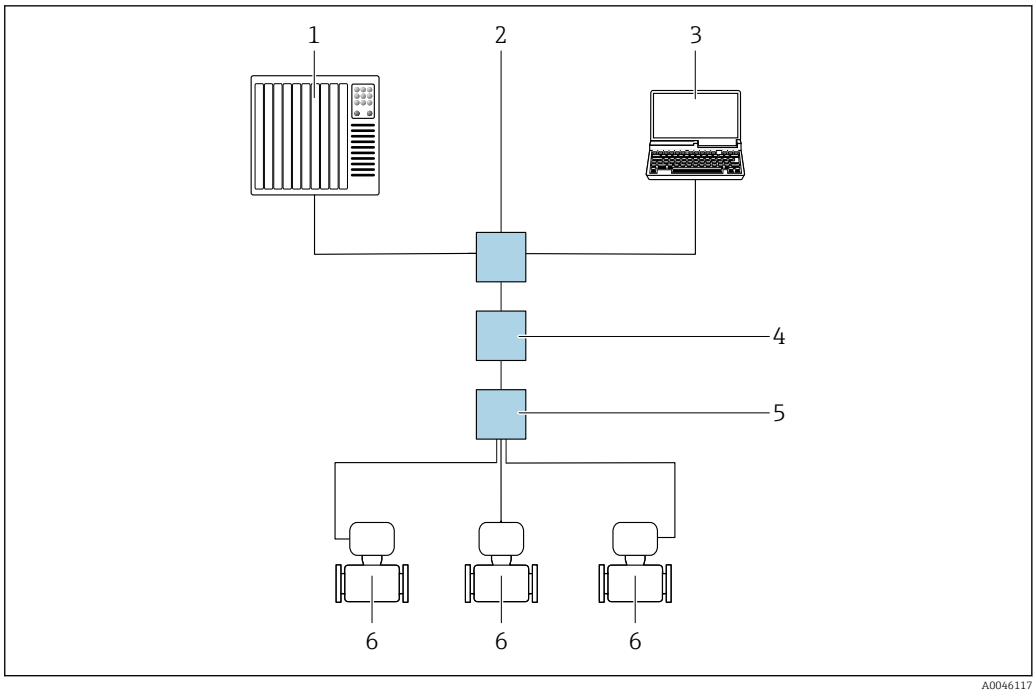

15 Options for remote operation via Modbus TCP over Ethernet-APL protocol (active)

1 *Automation system, e.g. Simatic S7 (Siemens)*
2 *Ethernet switch, e.g. Scalance X204 (Siemens)*
3 *Computer with web browser or operating tool*
4 *APL power switch/SPE power switch (optional)*
5 *APL field switch/SPE field switch*
6 *Measuring instrument/communication via port 1 (terminal 1 + 2)*

9 System integration

9.1 Overview of device description files

9.1.1 Current version data for the device

Firmware version	01.00.zz	▪ On the title page of the manual ▪ On the transmitter nameplate ▪ Firmware version Diagnostics → Device information → Firmware version

For an overview of the various firmware versions for the device
→ 📄 133

9.1.2 Operating tools

The suitable device description file for the individual operating tools is listed in the table below, along with information on where the file can be acquired.

FieldCare	▪ www.endress.com → Downloads area ▪ USB stick (contact Endress+Hauser) ▪ E-mail → Downloads area
DeviceCare	▪ www.endress.com → Downloads area ▪ E-mail → Downloads area

9.2 Modbus TCP system integration

For detailed information on system integration, see the Special Documentation for the Modbus TCP system integration with the device:
→ 📄 168

10 Commissioning

10.1 Post-mounting and post-connection check

Before commissioning the device:

- Make sure that the post-installation and post-connection checks have been performed successfully.

- Checklist for "Post-mounting" check→ 28
- Checklist for "Post-connection check" → 41

10.2 Switching on the measuring device

- Switch on the device upon successful completion of the post-mounting and post-connection check.
  - After a successful startup, the local display switches automatically from the startup display to the operational display.

If nothing appears on the local display or if a diagnostic message is displayed, refer to the section on "Diagnostics and troubleshooting" → 120.

10.3 Setting the operating language

Factory setting: English or ordered local language

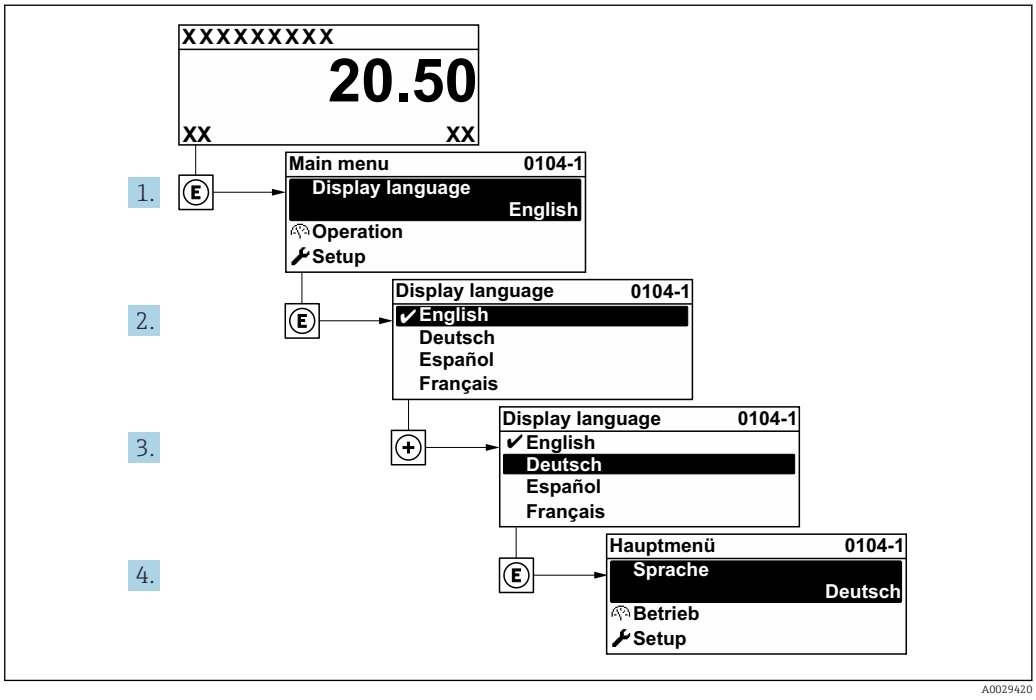

16 *Taking the example of the local display*

10.4 Configuring the device

The **Setup** menu with its guided wizards contains all the parameters needed for standard operation.

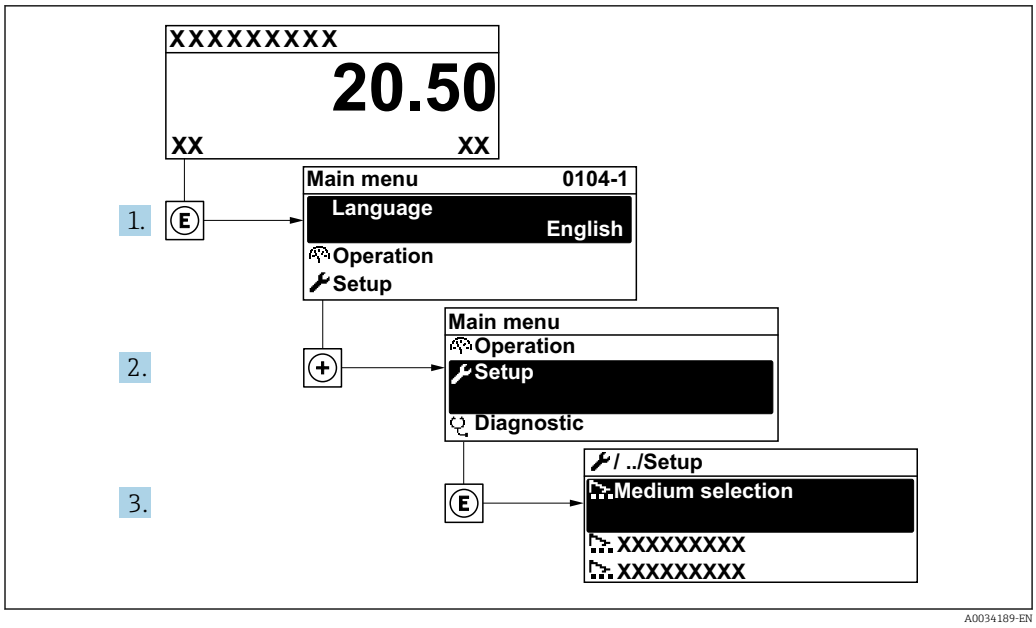

17 *Navigation to the "Setup" menuusing the example of the local display*

Navigation
"Setup" menu

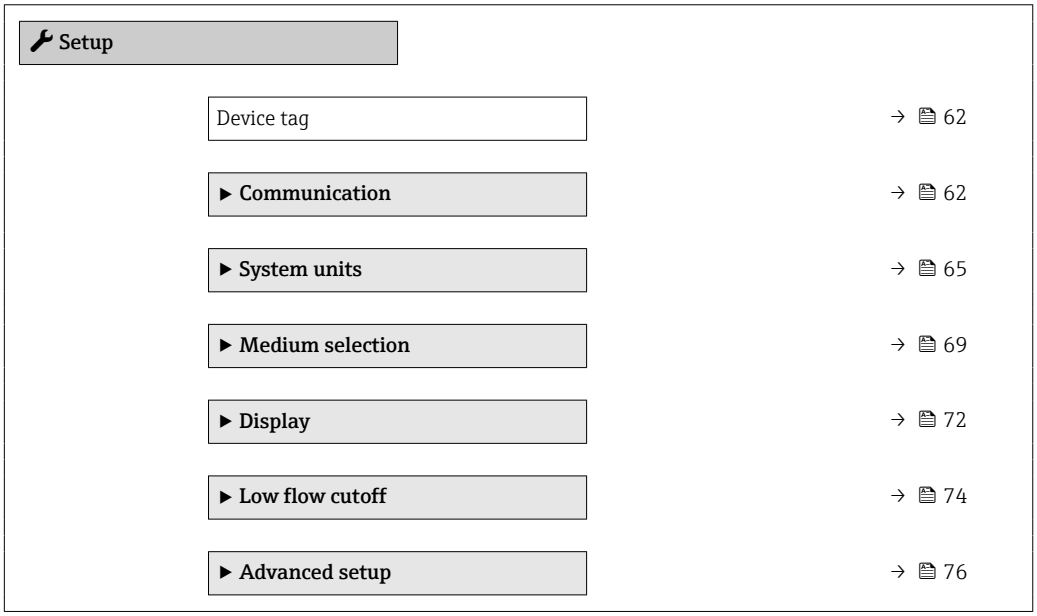

Parameter overview with brief description

Parameter	Description	User entry	Factory setting
Device tag	Enter the name for the measuring point.	Character string comprising numbers, letters and special characters (32)	Prowirl

10.4.1 Displaying the communication interface

The **Communication** submenu shows all the current parameter settings for selecting and configuring the communication interface.

Navigation
"Setup" menu → Communication

▶ **Communication**	
Byte order	→ 📄 63
Failure mode	→ 📄 63
Fieldbus write access	→ 📄 63
▶ **APL port**	→ 📄 63
▶ **Network diagnostics**	→ 📄 64

Parameter overview with brief description

Parameter	Description	Selection	Factory setting
Byte order	Select byte transmission sequence.	▪ 0-1-2-3 ▪ 3-2-1-0 ▪ 1-0-3-2 ▪ 2-3-0-1	1-0-3-2
Failure mode	Select measured value output behavior when a diagnostic message occurs via Modbus communication.	▪ NaN value ▪ Last valid value	NaN value
Fieldbus write access	Select access method to the measuring device via fieldbus.	▪ Read + write ▪ Read only	Read + write

"APL port" submenu

Navigation
"Setup" menu → Communication → APL port

▶ **APL port**	
IP address	→ 📄 64
Subnet mask	→ 📄 64
Default gateway	→ 📄 64
MAC address	→ 📄 64
DHCP client	→ 📄 64

Parameter overview with brief description

Parameter	Description	User entry / User interface / Selection	Factory setting
IP address	Enter the IP address of the service interface (port 2).	4 octet: 0 to 255 (in the particular octet)	192.168.1.212
Subnet mask	Enter the subnet mask of the service interface (port 2).	4 octet: 0 to 255 (in the particular octet)	255.255.255.0
Default gateway	Enter the standard gateway of the service interface (port 2).	4 octet: 0 to 255 (in the particular octet)	0.0.0.0
MAC address	Shows the MAC address of the service interface (port 2).	Unique 12-digit character string comprising letters and numbers, e.g.: 00:07:05:10:01:5F	Each measuring instrument is given an individual address.
DHCP client	Switch the DHCP client functionality on and off.	▪ Off ▪ On	On

"Network diagnostics" submenu

Navigation
"Setup" menu → Communication → Network diagnostics

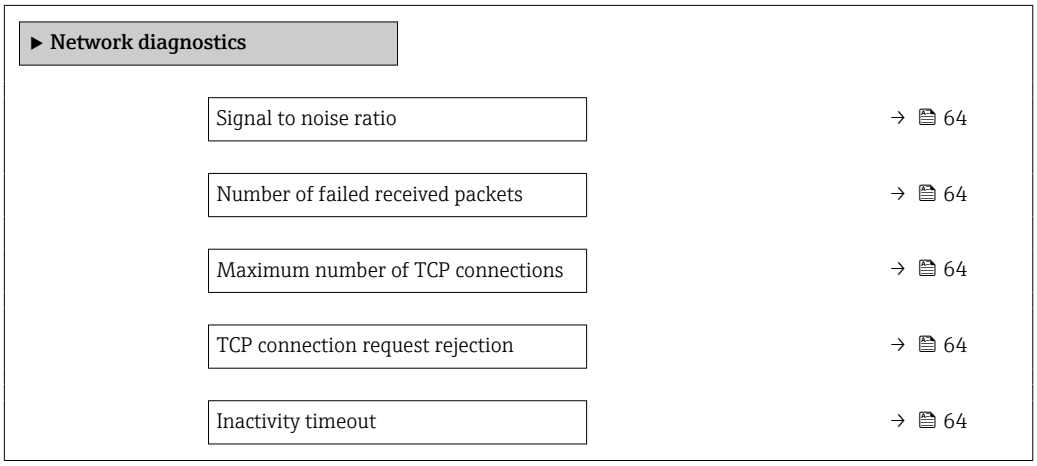

Parameter overview with brief description

Parameter	Description	User interface / User entry / Selection	Factory setting
Signal to noise ratio	Shows the signal to noise ratio of the Ethernet-APL connection. A value >21dB is good and >23dB is excellent.	Signed floating-point number	0 dB
Number of failed received packets	Shows the number of failed received packets (PHY).	0 to 65 535	0
Maximum number of TCP connections	Select the maximum number of concurrent TCP connections allowed.	1 to 4	4
TCP connection request rejection	Indicate how incoming TCP connection requests should be handled when the maximum number of connections has been established.	▪ Close inactive ▪ Close oldest ▪ Reject	Close inactive
Inactivity timeout	Enter the amount of time until an inactive connection is closed automatically	0 to 99 s	60 s

10.4.2 Setting the system units

In the **System units** submenu the units of all the measured values can be set.

The number of submenus and parameters can vary depending on the device version. Certain submenus and parameters in these submenus are not described in the Operating Instructions. Instead a description is provided in the Special Documentation for the device ("Supplementary documentation").

Navigation
"Setup" menu → System units

▶ System units	
Volume flow unit	→ 📄 66
Volume unit	→ 📄 66
Mass flow unit	→ 📄 66
Mass unit	→ 📄 66
Corrected volume flow unit	→ 📄 66
Corrected volume unit	→ 📄 66
Pressure unit	→ 📄 66
Temperature unit	→ 📄 66
Energy flow unit	→ 📄 67
Energy unit	→ 📄 67
Calorific value unit	→ 📄 67
Calorific value unit	→ 📄 67
Velocity unit	→ 📄 67
Density unit	→ 📄 67
Specific volume unit	→ 📄 67
Dynamic viscosity unit	→ 📄 68
Length unit	→ 📄 68

Parameter overview with brief description

Parameter	Prerequisite	Description	Selection	Factory setting
Volume flow unit	–	Select volume flow unit. *Effect* The selected unit applies to: ▪ Output ▪ Low flow cut off ▪ Simulation process variable	Unit choose list	Country-specific: ▪ m^3/h ▪ ft^3/min
Volume unit	–	Select volume unit.	Unit choose list	Country-specific: ▪ m^3 ▪ ft^3
Mass flow unit	–	Select mass flow unit. *Effect* The selected unit applies to: ▪ Output ▪ Low flow cut off ▪ Simulation process variable	Unit choose list	Country-specific: ▪ kg/h ▪ lb/min
Mass unit	–	Select mass unit.	Unit choose list	Country-specific: ▪ kg ▪ lb
Corrected volume flow unit	–	Select corrected volume flow unit. *Effect* The selected unit applies to: **Corrected volume flow** parameter	Unit choose list	Country-specific: ▪ Nm^3/h ▪ Sft^3/h
Corrected volume unit	–	Select corrected volume unit.	Unit choose list	Country-specific: ▪ Nm^3 ▪ Sft^3
Pressure unit	With order code for "Sensor version": "Mass (integrated temperature measurement)" option	Select process pressure unit. *Effect* The unit is taken from: ▪ Calculated saturated steam pressure ▪ Atmospheric pressure ▪ Maximum value ▪ Fixed process pressure ▪ Pressure ▪ Reference pressure	Unit choose list	Country-specific: ▪ bar ▪ psi
Temperature unit	–	Select temperature unit. *Effect* The selected unit applies to: ▪ Temperature ▪ Maximum value ▪ Minimum value ▪ Average value ▪ Maximum value ▪ Minimum value ▪ Maximum value ▪ Minimum value ▪ 2nd temperature delta heat ▪ Fixed temperature ▪ Reference combustion temperature ▪ Reference temperature ▪ Saturation temperature	Unit choose list	Country-specific: ▪ °C ▪ °F

Parameter	Prerequisite	Description	Selection	Factory setting
Energy flow unit	With order code for "Sensor version": "Mass (integrated temperature measurement)" option	Select energy flow unit. *Result* The selected unit applies to: ▪ **Heat flow difference** parameter ▪ **Energy flow** parameter	Unit choose list	Depends on country: ▪ kW ▪ Btu/h
Energy unit	With order code for "Sensor version": "Mass (integrated temperature measurement)" option	Select energy unit.	Unit choose list	Depends on country: ▪ kWh ▪ Btu
Calorific value unit	The following conditions are met: ▪ Order code for "Sensor version", "Mass (integrated temperature measurement)" option ▪ The **Gross calorific value volume** option or **Net calorific value volume** option is selected in the **Calorific value type** parameter.	Select calorific value unit. *Result* The selected unit applies to: Reference gross calorific value	Unit choose list	Depends on country: ▪ kJ/Nm³ ▪ Btu/Sft³
Calorific value unit (Mass)	The following conditions are met: ▪ Order code for "Sensor version", "Mass (integrated temperature measurement)" option ▪ The **Gross calorific value mass** option or **Net calorific value mass** option is selected in the **Calorific value type** parameter.	Select calorific value unit.	Unit choose list	Depends on country: ▪ kJ/kg ▪ Btu/lb
Velocity unit	–	Select velocity unit. *Result* The selected unit applies to: ▪ Flow velocity ▪ Maximum value	Unit choose list	Depends on country: ▪ m/s ▪ ft/s
Density unit	–	Select density unit. *Effect* The selected unit applies to: ▪ Output ▪ Simulation process variable	Unit choose list	Country-specific: ▪ kg/m³ ▪ lb/ft³
Specific volume unit	With order code for "Sensor version": "Mass (integrated temperature measurement)" option	Select the unit for the specific volume. *Result* The selected unit applies to: Specific volume	Unit choose list	Depends on country: ▪ m³/kg ▪ ft³/lb

Parameter	Prerequisite	Description	Selection	Factory setting
Dynamic viscosity unit	–	Select dynamic viscosity unit. *Result* The selected unit applies to: ▪ **Dynamic viscosity** parameter (gases) ▪ **Dynamic viscosity** parameter (liquids)	Unit choose list	Pa s
Length unit	–	Select length unit for nominal diameter.	▪ m ▪ mm ▪ ft ▪ in	mm

10.4.3 Selecting and setting the medium

The **Medium selection** wizard systematically guides the user through all the parameters that must be configured in order to select and set the medium.

Navigation
"Setup" menu → Medium selection

▶ **Medium selection**	
Select medium	→ 📄 69
Select gas type	→ 📄 69
Gas type	→ 📄 70
Relative humidity	→ 📄 70
Liquid type	→ 📄 70
Steam calculation mode	→ 📄 70
Steam quality	→ 📄 71
Steam quality value	→ 📄 71
Enthalpy calculation	→ 📄 71
Density calculation	→ 📄 71
Enthalpy type	→ 📄 71

Parameter overview with brief description

Parameter	Prerequisite	Description	Selection / User entry	Factory setting
Select medium	–	Select the medium type.	Steam	Steam
Select gas type	The following conditions are met: ▪ Order code for "Sensor version", Option "Mass (integrated temperature measurement)" ▪ The **Gas** option is selected in the **Select medium** parameter parameter.	Select measured gas type.	▪ Single gas ▪ Gas mixture ▪ Air ▪ Natural gas ▪ User-specific gas	User-specific gas

Parameter	Prerequisite	Description	Selection / User entry	Factory setting
Gas type	The following conditions are met: ▪ In the **Select medium** parameter, the **Gas** option is selected. ▪ In the **Select gas type** parameter, the **Single gas** option is selected.	Select measured gas type.	▪ Hydrogen H2 ▪ Helium He ▪ Neon Ne ▪ Argon Ar ▪ Krypton Kr ▪ Xenon Xe ▪ Nitrogen N2 ▪ Oxygen O2 ▪ Chlorine Cl2 ▪ Ammonia NH3 ▪ Carbon monoxide CO ▪ Carbon dioxide CO2 ▪ Sulfur dioxide SO2 ▪ Hydrogen sulfide H2S ▪ Hydrogen chloride HCl ▪ Methane CH4 ▪ Ethane C2H6 ▪ Propane C3H8 ▪ Butane C4H10 ▪ Ethylene C2H4 ▪ Vinyl chloride C2H3Cl	Methane CH4
Relative humidity	The following conditions are met: ▪ In the **Select medium** parameter, the **Gas** option is selected. ▪ In the **Select gas type** parameter, the **Air** option is selected.	Enter humidity content of air in %.	0 to 100 %	0 %
Liquid type	The following conditions are met: ▪ Order code for "Sensor version", Option "Mass (integrated temperature measurement)" ▪ The **Liquid** option is selected in the **Select medium** parameter parameter.	Select measured liquid type.	▪ Water ▪ LPG (Liquefied Petroleum Gas) ▪ User-specific liquid	Water
Steam calculation mode	The **Steam** option is selected in the **Select medium** parameter parameter.	Select calculation mode of steam: based on saturated steam (T-compensated) or automatic detection (p-/T-compensated).	▪ Saturated steam (T-compensated) ▪ Automatic (p-/T-compensated)	Saturated steam (T-compensated)

Parameter	Prerequisite	Description	Selection / User entry	Factory setting
Steam quality	The following conditions are met: ▪ Order code for "Application package": ▪ Option ES "Wet steam detection" ▪ Option EU "Wet steam measurement" ▪ The **Steam** option is selected in the **Select medium** parameter parameter. The software options currently enabled are displayed in the **Software option overview** parameter.	Select compensation mode for steam quality. For detailed information on setting the parameter in steam applications, see the Special Documentation for the **Wet Steam Detection** and **Wet Steam Measurement** application package → 168	▪ Fixed value ▪ Calculated value	Fixed value
Steam quality value	The following conditions are met: ▪ The **Steam** option is selected in the **Select medium** parameter parameter. ▪ The **Fixed value** option is selected in the **Steam quality** parameter parameter.	Enter fixed value for steam quality. For detailed information on setting the parameter in steam applications, see the Special Documentation for the **Wet Steam Detection** and **Wet Steam Measurement** application package → 168	0 to 100 %	100 %
Enthalpy calculation	The following conditions are met: ▪ Order code for "Sensor version", Option "Mass (integrated temperature measurement)" ▪ In the **Select medium** parameter, the **Gas** option is selected and in the **Select gas type** parameter, the **Natural gas** option is selected.	Select the norm the enthalpy calculation is based on.	▪ AGA5 ▪ ISO 6976	AGA5
Density calculation	The following conditions are met: ▪ In the **Select medium** parameter, the **Gas** option is selected. ▪ In the **Select gas type** parameter, the **Natural gas** option is selected.	Select the norm the density calculation is based on.	▪ AGA Nx19 ▪ ISO 12213- 2 ▪ ISO 12213- 3	AGA Nx19
Enthalpy type	The following conditions are met: ▪ In the **Select gas type** parameter, the **User-specific gas** option is selected. Or ▪ In the **Liquid type** parameter, the **User-specific liquid** option is selected.	Define which kind of enthalpy is used.	▪ Heat ▪ Calorific value	Heat

10.4.4 Configuring the local display

The **Display** wizard guides you systematically through all the parameters that can configured for configuring the local display.

Navigation
"Setup" menu → Display

▶ **Display**	
Format display	→ 📄 73
Value 1 display	→ 📄 73
0% bargraph value 1	→ 📄 73
100% bargraph value 1	→ 📄 73
Value 2 display	→ 📄 73
Value 3 display	→ 📄 73
0% bargraph value 3	→ 📄 73
100% bargraph value 3	→ 📄 74
Value 4 display	→ 📄 74

Parameter overview with brief description

Parameter	Prerequisite	Description	Selection / User entry	Factory setting
Format display	A local display is provided.	Select how measured values are shown on the display.	▪ 1 value, max. size ▪ 1 bargraph + 1 value ▪ 2 values ▪ 1 value large + 2 values ▪ 4 values	1 value, max. size
Value 1 display	A local display is provided.	Select the measured value that is shown on the local display.	▪ Volume flow ▪ Corrected volume flow ▪ Mass flow ▪ Flow velocity ▪ Temperature ▪ Vortex frequency ▪ Vortex kurtosis ▪ Vortex amplitude ▪ Calculated saturated steam pressure * ▪ Total mass flow * ▪ Condensate mass flow * ▪ Energy flow * ▪ Heat flow difference * ▪ Reynolds number * ▪ Density * ▪ Pressure * ▪ Specific volume * ▪ Degrees of superheat * ▪ Totalizer 1 ▪ Totalizer 2 ▪ Totalizer 3	Volume flow
0% bargraph value 1	A local display is provided.	Enter 0 % value for bar graph display.	Signed floating-point number	Country-specific: ▪ 0 m^3/h ▪ 0 ft^3/h
100% bargraph value 1	A local display is provided.	Enter 100 % value for bar graph display.	Signed floating-point number	Depends on country and nominal diameter
Decimal places 1	A measured value is specified in the **Value 1 display** parameter.	Select the number of decimal places for the display value.	▪ x ▪ x.x ▪ x.xx ▪ x.xxx ▪ x.xxxx	x.xx
Value 2 display	A local display is provided.	Select the measured value that is shown on the local display.	For the picklist, see **Value 1 display** parameter (→ 73)	None
Decimal places 2	A measured value is specified in the **Value 2 display** parameter.	Select the number of decimal places for the display value.	▪ x ▪ x.x ▪ x.xx ▪ x.xxx ▪ x.xxxx	x.xx
Value 3 display	A local display is provided.	Select the measured value that is shown on the local display.	For the picklist, see **Value 1 display** parameter (→ 73)	None
0% bargraph value 3	A selection was made in the **Value 3 display** parameter.	Enter 0 % value for bar graph display.	Signed floating-point number	Country-specific: ▪ 0 m^3/h ▪ 0 ft^3/h

Parameter	Prerequisite	Description	Selection / User entry	Factory setting
100% bargraph value 3	A selection was made in the **Value 3 display** parameter.	Enter 100 % value for bar graph display.	Signed floating-point number	0
Decimal places 3	A measured value is specified in the **Value 3 display** parameter.	Select the number of decimal places for the display value.	▪ x ▪ x.x ▪ x.xx ▪ x.xxx ▪ x.xxxx	x.xx
Value 4 display	A local display is provided.	Select the measured value that is shown on the local display.	For the picklist, see **Value 1 display** parameter (→ 🗎 73)	None
Decimal places 4	A measured value is specified in the **Value 4 display** parameter.	Select the number of decimal places for the display value.	▪ x ▪ x.x ▪ x.xx ▪ x.xxx ▪ x.xxxx	x.xx
Display language	A local display is provided.	Set display language.	▪ English ▪ Deutsch ▪ Français ▪ Español ▪ Italiano ▪ Nederlands ▪ Portuguesa ▪ Polski ▪ русский язык (Russian) ▪ Svenska ▪ Türkçe ▪ 中文 (Chinese) ▪ 日本語 (Japanese) ▪ 한국어 (Korean) ▪ tiếng Việt (Vietnamese) * ▪ čeština (Czech)	English (alternatively, the ordered language is preset in the device)
Display interval	A local display is provided.	Set time measured values are shown on display if display alternates between values.	1 to 10 s	5 s
Display damping	A local display is provided.	Set display reaction time to fluctuations in the measured value.	0.0 to 999.9 s	5.0 s
Header	A local display is provided.	Select header contents on local display.	▪ Device tag ▪ Free text	Device tag
Header text	The **Free text** option is selected in the **Header** parameter.	Enter display header text.	Max. 12 characters, such as letters, numbers or special characters (e.g. @, %, /)	----------
Separator	A local display is provided.	Select decimal separator for displaying numerical values.	▪ . (point) ▪ , (comma)	. (point)
Backlight	–	Switch the local display backlight on and off.	▪ Disable ▪ Enable	Disable

* Visibility depends on order options or device settings

10.4.5 Configuring the low flow cut off

The **Low flow cutoff** wizard systematically guides the user through all the parameters that must be set to configure low flow cut off.

The measuring signal must have a certain minimum signal amplitude so that the signals can be evaluated without any errors. Using the nominal diameter, the corresponding flow can also be derived from this amplitude.

The minimum signal amplitude depends on the setting for the sensitivity of the DSC sensor, the steam quality **x** and the force of the vibrations present **a**.

The value **mf** corresponds to the lowest measurable flow velocity without vibration (no wet steam) for a density of 1 kg/m^3 (0.0624 lb/ft^3).

The value **mf** can be set in the range of 20 to 6 m/s (65.6 to 19.7 ft/s) (factory setting 11 m/s (36.1 ft/s)) with the **Sensitivity** parameter (value range 1 to 9, factory setting 5).

Navigation
"Setup" menu → Low flow cutoff

▶ **Low flow cutoff**		
	Sensitivity	→ 🗎 75
	Turndown	→ 🗎 75

Parameter overview with brief description

Parameter	Description	User entry	Factory setting
Sensitivity	Adjust sensitivity of the device in the lower flow range. Lower sensitivity leads to more robustness against external interference. The parameter determines the level of sensitivity at the lower end of the measuring range (start of measuring range). Low values can improve the robustness of the device with regard to external influences. The start of measuring range is then set to a higher value. The smallest specified measuring range is when sensitivity is at a maximum.	1 to 9	5
Turndown	Adjust the turn down. Lower turn down increases the minimum measureable flow frequency. The measuring range can be limited with this parameter, if necessary. The upper end of the measuring range is not affected. The start of the low end of the measuring range can be changed to a higher flow value, making it possible to cut off low flows, for example.	50 to 100 %	100 %

10.4.6 Advanced settings

The **Advanced setup** submenu with its submenus contains parameters for specific settings.

Navigation to the "Advanced setup" submenu

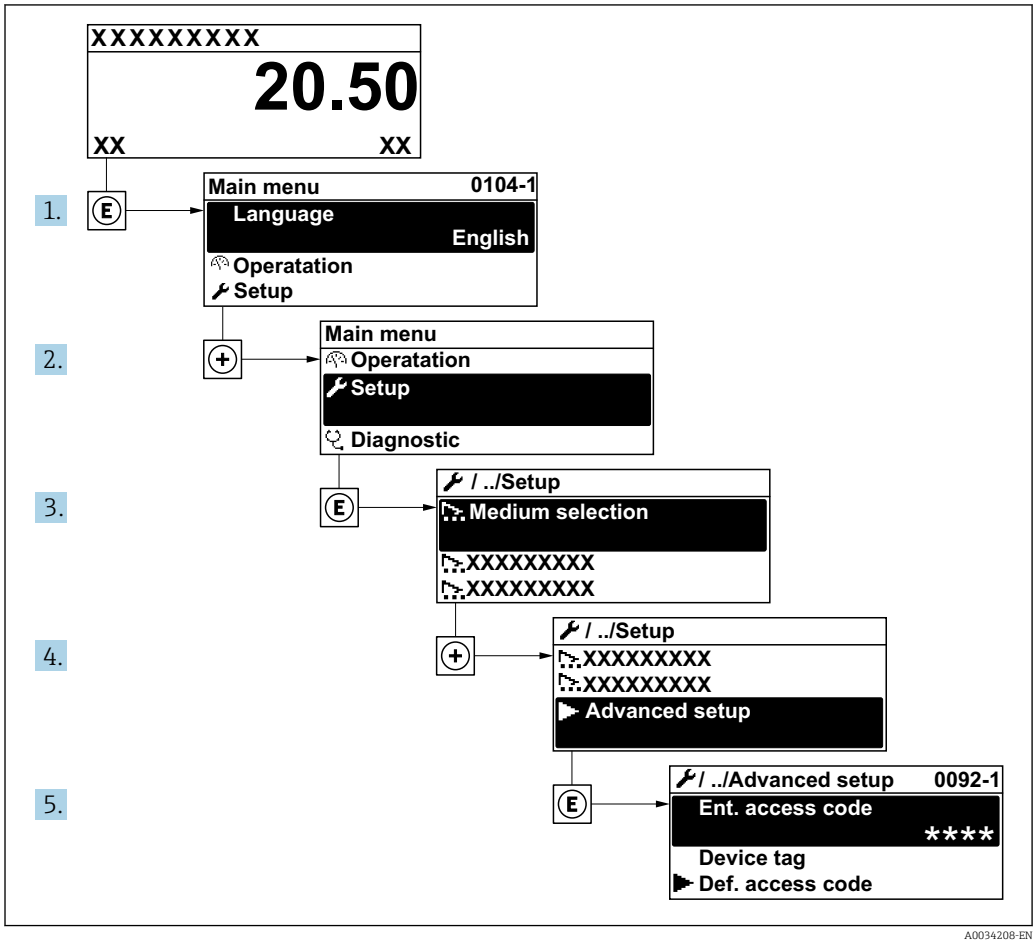

The number of submenus can vary depending on the device version. Some submenus are not dealt with in the Operating Instructions. These submenus and the parameters they contain are explained in the Special Documentation for the device.

Navigation
"Setup" menu → Advanced setup

▶ Advanced setup	
Enter access code	→ 📄 77
▶ Medium properties	→ 📄 77
▶ External compensation	→ 📄 91
▶ Sensor adjustment	→ 📄 92
▶ Totalizer 1 to n	→ 📄 94

▶ **Display**	→ 📄 96
▶ **Heartbeat setup**	→ 📄 99
▶ **Administration**	→ 📄 99

Parameter overview with brief description

Parameter	Description	User entry
Enter access code	Enter access code to disable write protection of parameters.	Max. 16-digit character string comprising numbers, letters and special characters

Setting the medium properties

In the **Medium properties** submenu the reference values for the measuring application can be set.

Navigation
"Setup" menu → Advanced setup → Medium properties

▶ **Medium properties**	
Enthalpy type	→ 📄 78
Calorific value type	→ 📄 78
Reference combustion temperature	→ 📄 78
Reference density	→ 📄 78
Reference gross calorific value	→ 📄 78
Reference pressure	→ 📄 79
Reference temperature	→ 📄 79
Reference Z-factor	→ 📄 79
Linear expansion coefficient	→ 📄 79
Relative density	→ 📄 79
Specific heat capacity	→ 📄 79
Calorific value	→ 📄 80
Z-factor	→ 📄 80
Dynamic viscosity	→ 📄 80

Dynamic viscosity	→ 80
▶ **Gas composition**	→ 80

Parameter overview with brief description

Parameter	Prerequisite	Description	Selection / User entry	Factory setting
Enthalpy type	The following conditions are met: ▪ In the **Select gas type** parameter, the **User-specific gas** option is selected. Or ▪ In the **Liquid type** parameter, the **User-specific liquid** option is selected.	Define which kind of enthalpy is used.	▪ Heat ▪ Calorific value	Heat
Calorific value type	–	Select calculation based on gross calorific value or net calorific value.	▪ Gross calorific value volume ▪ Net calorific value volume ▪ Gross calorific value mass ▪ Net calorific value mass	Gross calorific value mass
Reference combustion temperature	The **Reference combustion temperature** parameter is visible.	Enter reference combustion temperature to calculate the natural gas energy value. *Dependency* The unit is taken from the **Temperature unit** parameter	−200 to 450 °C	20 °C
Reference density	The following conditions are met: ▪ In the **Select gas type** parameter, the **User-specific gas** option is selected. Or ▪ In the **Liquid type** parameter, the **Water** option or **User-specific liquid** option is selected.	Enter fixed value for reference density. *Dependency* The unit is taken from the **Density unit** parameter	0.01 to 15 000 kg/m³	1 000 kg/m³
Reference gross calorific value	The following conditions are met: ▪ In the **Select medium** parameter, the **Gas** option is selected. ▪ In the **Select gas type** parameter, the **Natural gas** option is selected. ▪ In the **Density calculation** parameter, the **ISO 12213-3** option is selected.	Enter reference gross calorific value of the natural gas. *Dependency* The unit is taken from the **Calorific value unit** parameter	Positive floating-point number	50 000 kJ/Nm³

Parameter	Prerequisite	Description	Selection / User entry	Factory setting
Reference pressure	The following conditions are met: ▪ Order code for "Sensor version", Option "Mass (integrated temperature measurement)" ▪ The **Gas** option is selected in the **Select medium** parameter parameter.	Enter reference pressure for the calulation of the reference density. *Dependency* The unit is taken from the **Pressure unit** parameter.	0 to 250 bar	1.01325 bar
Reference temperature	The following conditions are met: ▪ In the **Select medium** parameter, the **Gas** option is selected. Or ▪ In the **Select medium** parameter, the **Liquid** option is selected.	Enter reference temperature for calculating the reference density. *Dependency* The unit is taken from: **Temperature unit** parameter	−200 to 450 °C	0 °C
Reference Z-factor	In the **Select gas type** parameter, the **User-specific gas** option is selected.	Enter real gas constant Z for gas under reference conditions.	0.1 to 2	1
Linear expansion coefficient	The following conditions are met: ▪ The **Liquid** option is selected in the **Select medium** parameter. ▪ The **User-specific liquid** option is selected in the **Liquid type** parameter.	Enter linear, medium-specific expansion coefficient for calculating the reference density.	$1.0 \cdot 10^{-6}$ to $2.0 \cdot 10^{-3}$	$2.06 \cdot 10^{-4}$
Relative density	The following conditions are met: ▪ In the **Select medium** parameter, the **Gas** option is selected. ▪ In the **Select gas type** parameter, the **Natural gas** option is selected. ▪ In the **Density calculation** parameter, the **ISO 12213-3** option is selected.	Enter a relative density of the natural gas.	0.55 to 0.9	0.664

Specific heat capacity	The following conditions are met:
	▪ Selected medium:
	  ▪ In the **Select gas type** parameter, the **User-specific gas** option is selected.
	  Or
	  ▪ In the **Liquid type** parameter, the **User-specific liquid** option is selected.
	▪ In the **Enthalpy type** parameter, the **Heat** option is selected.
		Enter the specific heat capacity of the medium.
		Dependency
		The unit is taken from the **Specific heat capacity unit** parameter
			0 to 50 kJ/(kgK)	4.187 kJ/(kgK)

Parameter	Prerequisite	Description	Selection / User entry	Factory setting

Calorific value	The following conditions are met:
	▪ Selected medium:
	  ▪ In the **Select gas type** parameter, the **User-specific gas** option is selected.
	  Or
	  ▪ In the **Liquid type** parameter, the **User-specific liquid** option is selected.
	▪ In the **Enthalpy type** parameter, the **Calorific value** option is selected.
	▪ In the **Calorific value type** parameter, the **Gross calorific value volume** option or **Gross calorific value mass** option is selected.
		Enter gross calorific value to calculate the energy flow.	Positive floating-point number	50 000 kJ/kg

Z-factor	In the **Select gas type** parameter, the **User-specific gas** option is selected.	Enter real gas constant Z for gas under operation conditions.	0.1 to 2.0	1

Dynamic viscosity (Gases)	The following conditions are met:
	▪ Order code for "Sensor version",
	  ▪ Option "Volume"
	  or
	  ▪ Option "Volume high temperature"
	▪ The **Gas** option or the **Steam** option is selected in the **Select medium** parameter.
	  or
	▪ The **User-specific gas** option is selected in the **Select gas type** parameter.
		Enter fixed value for dynamic viscosity for a gas/steam.
		Dependency
		The unit is taken from the **Dynamic viscosity unit** parameter.
			Positive floating-point number	0.015 cP

Dynamic viscosity (Liquids)	The following conditions are met:
	▪ Order code for "Sensor version",
	  ▪ Option "Volume"
	  or
	  ▪ Option "Volume high temperature"
	▪ The **Liquid** option is selected in the **Select medium** parameter parameter.
	  or
	▪ The **User-specific liquid** option is selected in the **Liquid type** parameter.
		Enter fixed value for dynamic viscosity for a liquid.
		Dependency
		The unit is taken from the **Dynamic viscosity unit** parameter.
			Positive floating-point number	1 cP

Configuring the gas composition

In the **Gas composition** submenu the gas composition for the measuring application can be set.

Navigation
"Setup" menu → Advanced setup → Medium properties → Gas composition

▶ Gas composition	
Gas mixture	→ 83
Mol% Ar	→ 84
Mol% C2H3Cl	→ 84
Mol% C2H4	→ 84
Mol% C2H6	→ 84
Mol% C3H8	→ 85
Mol% CH4	→ 85
Mol% Cl2	→ 85
Mol% CO	→ 85
Mol% CO2	→ 86
Mol% H2	→ 86
Mol% H2O	→ 86
Mol% H2S	→ 86
Mol% HCl	→ 87
Mol% He	→ 87
Mol% i-C4H10	→ 87
Mol% i-C5H12	→ 87
Mol% Kr	→ 87
Mol% N2	→ 88
Mol% n-C10H22	→ 88
Mol% n-C4H10	→ 88
Mol% n-C5H12	→ 88

Mol% n-C6H14	→ 📄 89
Mol% n-C7H16	→ 📄 89
Mol% n-C8H18	→ 📄 89
Mol% n-C9H20	→ 📄 89
Mol% Ne	→ 📄 89
Mol% NH3	→ 📄 90
Mol% O2	→ 📄 90
Mol% SO2	→ 📄 90
Mol% Xe	→ 📄 90
Mol% other gas	→ 📄 91

Parameter overview with brief description

Parameter	Prerequisite	Description	Selection / User entry	Factory setting
Gas type	The following conditions are met: ▪ In the **Select medium** parameter, the **Gas** option is selected. ▪ In the **Select gas type** parameter, the **Single gas** option is selected.	Select measured gas type.	▪ Hydrogen H2 ▪ Helium He ▪ Neon Ne ▪ Argon Ar ▪ Krypton Kr ▪ Xenon Xe ▪ Nitrogen N2 ▪ Oxygen O2 ▪ Chlorine Cl2 ▪ Ammonia NH3 ▪ Carbon monoxide CO ▪ Carbon dioxide CO2 ▪ Sulfur dioxide SO2 ▪ Hydrogen sulfide H2S ▪ Hydrogen chloride HCl ▪ Methane CH4 ▪ Ethane C2H6 ▪ Propane C3H8 ▪ Butane C4H10 ▪ Ethylene C2H4 ▪ Vinyl chloride C2H3Cl	Methane CH4
Gas mixture	The following conditions are met: ▪ In the **Select medium** parameter, the **Gas** option is selected. ▪ In the **Select gas type** parameter, the **Gas mixture** option is selected.	Select measured gas mixture.	▪ Air ▪ Hydrogen H2 ▪ Helium He ▪ Neon Ne ▪ Argon Ar ▪ Krypton Kr ▪ Xenon Xe ▪ Nitrogen N2 ▪ Oxygen O2 ▪ Chlorine Cl2 ▪ Ammonia NH3 ▪ Carbon monoxide CO ▪ Carbon dioxide CO2 ▪ Sulfur dioxide SO2 ▪ Hydrogen sulfide H2S ▪ Hydrogen chloride HCl ▪ Methane CH4 ▪ Propane C3H8 ▪ Ethane C2H6 ▪ Butane C4H10 ▪ Ethylene C2H4 ▪ Vinyl chloride C2H3Cl ▪ Water ▪ Other	Methane CH4

Parameter	Prerequisite	Description	Selection / User entry	Factory setting
Mol% Ar	The following conditions are met: In the **Select medium** parameter, the **Gas** option is selected. ▪ In the **Select gas type** parameter, the **Gas mixture** option is selected and in the **Gas mixture** parameter, the **Argon Ar** option is selected. Or ▪ In the **Select gas type** parameter, the **Natural gas** option is selected and in the **Density calculation** parameter, the **ISO 12213-2** option is selected.	Enter amount of substance for the gas mixture.	0 to 100 %	0 %
Mol% C2H3Cl	The following conditions are met: ▪ In the **Select medium** parameter, the **Gas** option is selected. ▪ In the **Select gas type** parameter, the **Gas mixture** option is selected. ▪ In the **Gas mixture** parameter, the **Vinyl chloride C2H3Cl** option is selected.	Enter amount of substance for the gas mixture.	0 to 100 %	0 %
Mol% C2H4	The following conditions are met: ▪ In the **Select medium** parameter, the **Gas** option is selected. ▪ In the **Select gas type** parameter, the **Gas mixture** option is selected. ▪ In the **Gas mixture** parameter, the **Ethylene C2H4** option is selected.	Enter amount of substance for the gas mixture.	0 to 100 %	0 %
Mol% C2H6	The following conditions are met: In the **Select medium** parameter, the **Gas** option is selected. ▪ In the **Select gas type** parameter, the **Gas mixture** option is selected and in the **Gas mixture** parameter, the **Ethane C2H6** option is selected. Or ▪ In the **Select gas type** parameter, the **Natural gas** option is selected and in the **Density calculation** parameter, the **ISO 12213-2** option is selected.	Enter amount of substance for the gas mixture.	0 to 100 %	0 %

Parameter	Prerequisite	Description	Selection / User entry	Factory setting
Mol% C3H8	The following conditions are met: In the **Select medium** parameter, the **Gas** option is selected. ▪ In the **Select gas type** parameter, the **Gas mixture** option is selected and in the **Gas mixture** parameter, the **Propane C3H8** option is selected. Or ▪ In the **Select gas type** parameter, the **Natural gas** option is selected and in the **Density calculation** parameter, the **ISO 12213-2** option is selected.	Enter amount of substance for the gas mixture.	0 to 100 %	0 %
Mol% CH4	The following conditions are met: In the **Select medium** parameter, the **Gas** option is selected. ▪ In the **Select gas type** parameter, the **Gas mixture** option is selected and in the **Gas mixture** parameter, the **Methane CH4** option is selected. Or ▪ In the **Select gas type** parameter, the **Natural gas** option is selected.	Enter amount of substance for the gas mixture.	0 to 100 %	100 %
Mol% Cl2	The following conditions are met: ▪ In the **Select medium** parameter, the **Gas** option is selected. ▪ In the **Select gas type** parameter, the **Gas mixture** option is selected. ▪ In the **Gas mixture** parameter, the **Chlorine Cl2** option is selected.	Enter amount of substance for the gas mixture.	0 to 100 %	0 %
Mol% CO	The following conditions are met: In the **Select medium** parameter, the **Gas** option is selected. ▪ In the **Select gas type** parameter, the **Gas mixture** option is selected and in the **Gas mixture** parameter, the **Carbon monoxide CO** option is selected. Or ▪ In the **Select gas type** parameter, the **Natural gas** option is selected and in the **Density calculation** parameter, the **ISO 12213-2** option is selected.	Enter amount of substance for the gas mixture.	0 to 100 %	0 %

Parameter	Prerequisite	Description	Selection / User entry	Factory setting
Mol% CO2	The following conditions are met: In the **Select medium** parameter, the **Gas** option is selected. ▪ In the **Select gas type** parameter, the **Gas mixture** option is selected and in the **Gas mixture** parameter, the **Carbon dioxide CO2** option is selected. Or ▪ In the **Select gas type** parameter, the **Natural gas** option is selected.	Enter amount of substance for the gas mixture.	0 to 100 %	0 %
Mol% H2	The following conditions are met: In the **Select medium** parameter, the **Gas** option is selected. ▪ In the **Select gas type** parameter, the **Gas mixture** option is selected and in the **Gas mixture** parameter, the **Hydrogen H2** option is selected. Or ▪ In the **Select gas type** parameter, the **Natural gas** option is selected and in the **Density calculation** parameter, the **AGA Nx19** option is **not** selected.	Enter amount of substance for the gas mixture.	0 to 100 %	0 %
Mol% H2O	The following conditions are met: ▪ In the **Select medium** parameter, the **Gas** option is selected. ▪ In the **Select gas type** parameter, the **Natural gas** option is selected. ▪ In the **Density calculation** parameter, the **ISO 12213-2** option is selected.	Enter amount of substance for the gas mixture.	0 to 100 %	0 %
Mol% H2S	The following conditions are met: In the **Select medium** parameter, the **Gas** option is selected. ▪ In the **Select gas type** parameter, the **Gas mixture** option is selected and in the **Gas mixture** parameter, the **Hydrogen sulfide H2S** option is selected. Or ▪ In the **Select gas type** parameter, the **Natural gas** option is selected and in the **Density calculation** parameter, the **ISO 12213-2** option is selected.	Enter amount of substance for the gas mixture.	0 to 100 %	0 %

Parameter	Prerequisite	Description	Selection / User entry	Factory setting
Mol% HCl	The following conditions are met: ▪ In the **Select medium** parameter, the **Gas** option is selected. ▪ In the **Select gas type** parameter, the **Gas mixture** option is selected. ▪ In the **Gas mixture** parameter, the **Hydrogen chloride HCl** option is selected.	Enter amount of substance for the gas mixture.	0 to 100 %	0 %
Mol% He	The following conditions are met: In the **Select medium** parameter, the **Gas** option is selected. ▪ In the **Select gas type** parameter, the **Gas mixture** option is selected and in the **Gas mixture** parameter, the **Helium He** option is selected. Or ▪ In the **Select gas type** parameter, the **Natural gas** option is selected and in the **Density calculation** parameter, the **ISO 12213-2** option is selected.	Enter amount of substance for the gas mixture.	0 to 100 %	0 %
Mol% i-C4H10	The following conditions are met: ▪ In the **Select medium** parameter, the **Gas** option is selected. ▪ In the **Select gas type** parameter, the **Natural gas** option is selected. ▪ In the **Density calculation** parameter, the **ISO 12213-2** option is selected.	Enter amount of substance for the gas mixture.	0 to 100 %	0 %
Mol% i-C5H12	The following conditions are met: ▪ In the **Select medium** parameter, the **Gas** option is selected. ▪ In the **Select gas type** parameter, the **Natural gas** option is selected. ▪ In the **Density calculation** parameter, the **ISO 12213-2** option is selected.	Enter amount of substance for the gas mixture.	0 to 100 %	0 %
Mol% Kr	The following conditions are met: ▪ In the **Select medium** parameter, the **Gas** option is selected. ▪ In the **Select gas type** parameter, the **Gas mixture** option is selected. ▪ In the **Gas mixture** parameter, the **Krypton Kr** option is selected.	Enter amount of substance for the gas mixture.	0 to 100 %	0 %

Parameter	Prerequisite	Description	Selection / User entry	Factory setting
Mol% N2	The following conditions are met: In the **Select medium** parameter, the **Gas** option is selected. ▪ In the **Select gas type** parameter, the **Gas mixture** option is selected and in the **Gas mixture** parameter, the **Nitrogen N2** option is selected. Or ▪ In the **Select gas type** parameter, the **Natural gas** option is selected and in the **Density calculation** parameter, the **AGA Nx19** option or the **ISO 12213- 2** option is selected.	Enter amount of substance for the gas mixture.	0 to 100 %	0 %
Mol% n-C10H22	The following conditions are met: ▪ In the **Select medium** parameter, the **Gas** option is selected. ▪ In the **Select gas type** parameter, the **Natural gas** option is selected. ▪ In the **Density calculation** parameter, the **ISO 12213-2** option is selected.	Enter amount of substance for the gas mixture.	0 to 100 %	0 %

Mol% n-C4H10	The following conditions are met:
	▪ In the **Select medium** parameter, the **Gas** option is selected.
	  ▪ In the **Select gas type** parameter, the **Gas mixture** option is selected and in the **Gas mixture** parameter, the **Butane C4H10** option is selected.
	  Or
	  ▪ In the **Select gas type** parameter, the **Natural gas** option is selected and in the **Density calculation** parameter, the **ISO 12213- 2** option is selected.
	▪ Or
	In the **Select medium** parameter, the **Liquid** option is selected and in the **Liquid type** parameter, the **LPG** option is selected.
		Enter amount of substance for the gas mixture.	0 to 100 %	0 %

Mol% n-C5H12	The following conditions are met: ▪ In the **Select medium** parameter, the **Gas** option is selected. ▪ In the **Select gas type** parameter, the **Natural gas** option is selected. ▪ In the **Density calculation** parameter, the **ISO 12213-2** option is selected.	Enter amount of substance for the gas mixture.	0 to 100 %	0 %

Parameter	Prerequisite	Description	Selection / User entry	Factory setting
Mol% n-C6H14	The following conditions are met: ▪ In the **Select medium** parameter, the **Gas** option is selected. ▪ In the **Select gas type** parameter, the **Natural gas** option is selected. ▪ In the **Density calculation** parameter, the **ISO 12213-2** option is selected.	Enter amount of substance for the gas mixture.	0 to 100 %	0 %
Mol% n-C7H16	The following conditions are met: ▪ In the **Select medium** parameter, the **Gas** option is selected. ▪ In the **Select gas type** parameter, the **Natural gas** option is selected. ▪ In the **Density calculation** parameter, the **ISO 12213-2** option is selected.	Enter amount of substance for the gas mixture.	0 to 100 %	0 %
Mol% n-C8H18	The following conditions are met: ▪ In the **Select medium** parameter, the **Gas** option is selected. ▪ In the **Select gas type** parameter, the **Natural gas** option is selected. ▪ In the **Density calculation** parameter, the **ISO 12213-2** option is selected.	Enter amount of substance for the gas mixture.	0 to 100 %	0 %
Mol% n-C9H20	The following conditions are met: ▪ In the **Select medium** parameter, the **Gas** option is selected. ▪ In the **Select gas type** parameter, the **Natural gas** option is selected. ▪ In the **Density calculation** parameter, the **ISO 12213-2** option is selected.	Enter amount of substance for the gas mixture.	0 to 100 %	0 %
Mol% Ne	The following conditions are met: ▪ In the **Select medium** parameter, the **Gas** option is selected. ▪ In the **Select gas type** parameter, the **Gas mixture** option is selected. ▪ In the **Gas mixture** parameter, the **Neon Ne** option is selected.	Enter amount of substance for the gas mixture.	0 to 100 %	0 %

Parameter	Prerequisite	Description	Selection / User entry	Factory setting
Mol% NH3	The following conditions are met: ▪ In the **Select medium** parameter, the **Gas** option is selected. ▪ In the **Select gas type** parameter, the **Gas mixture** option is selected. ▪ In the **Gas mixture** parameter, the **Ammonia NH3** option is selected.	Enter amount of substance for the gas mixture.	0 to 100 %	0 %
Mol% O2	The following conditions are met: In the **Select medium** parameter, the **Gas** option is selected. ▪ In the **Select gas type** parameter, the **Gas mixture** option is selected and in the **Gas mixture** parameter, the **Oxygen O2** option is selected. Or ▪ In the **Select gas type** parameter, the **Natural gas** option is selected and in the **Density calculation** parameter, the **ISO 12213-2** option is selected.	Enter amount of substance for the gas mixture.	0 to 100 %	0 %
Mol% SO2	The following conditions are met: ▪ In the **Select medium** parameter, the **Gas** option is selected. ▪ In the **Select gas type** parameter, the **Gas mixture** option is selected. ▪ In the **Gas mixture** parameter, the **Sulfur dioxide SO2** option is selected.	Enter amount of substance for the gas mixture.	0 to 100 %	0 %
Mol% Xe	The following conditions are met: ▪ In the **Select medium** parameter, the **Gas** option is selected. ▪ In the **Select gas type** parameter, the **Gas mixture** option is selected. ▪ In the **Gas mixture** parameter, the **Xenon Xe** option is selected.	Enter amount of substance for the gas mixture.	0 to 100 %	0 %

Parameter	Prerequisite	Description	Selection / User entry	Factory setting
Mol% other gas	The following conditions are met: ▪ In the **Select medium** parameter, the **Gas** option is selected. ▪ In the **Select gas type** parameter, the **Gas mixture** option is selected. ▪ In the **Gas mixture** parameter, the **Other** option is selected.	Enter amount of substance for the gas mixture.	0 to 100 %	0 %
Relative humidity	The following conditions are met: ▪ In the **Select medium** parameter, the **Gas** option is selected. ▪ In the **Select gas type** parameter, the **Air** option is selected.	Enter humidity content of air in %.	0 to 100 %	0 %

Performing external compensation

The **External compensation** submenu contains parameters which can be used to enter external or fixed values. These values are used for internal calculations.

Navigation

"Setup" menu → Advanced setup → External compensation

▶ External compensation	
External value	→ 📄 92
Atmospheric pressure	→ 📄 92
Delta heat calculation	→ 📄 92
Fixed density	→ 📄 92
Fixed density	→ 📄 92
Fixed temperature	→ 📄 92
2nd temperature delta heat	→ 📄 92
Fixed process pressure	→ 📄 92

Parameter overview with brief description

Parameter	Prerequisite	Description	Selection / User entry	Factory setting
External value	With order code for "Sensor version": "Mass (integrated temperature measurement)" option	Assign variable from external device to process variable. For detailed information on the calculation of the measured variables with steam:	▪ Off ▪ Pressure ▪ Gauge pressure ▪ Density ▪ 2nd temperature delta heat	Off
Atmospheric pressure	In the **External value** parameter, the **Gauge pressure** option is selected.	Enter atmospheric pressure value to be used for pressure correction. *Dependency* The unit is taken from the **Pressure unit** parameter	0 to 250 bar	1.01325 bar
Delta heat calculation	The **Delta heat calculation** parameter is visible.	Calculates the transferred heat of a heat exchanger (= delta heat).	▪ Off ▪ Device on cold side ▪ Device on warm side	Device on warm side
Fixed density	With order code for "Sensor version": Option "Volume high temperature"	Enter fixed value for medium density. *Dependency* The unit is taken from the **Density unit** parameter.	0.01 to 15 000 kg/m³	1 000 kg/m³
Fixed density	With order code for "Sensor version": Option "Volume high temperature"	Enter fixed value for medium density. *Dependency* The unit is taken from the **Density unit** parameter.	0.01 to 15 000 kg/m³	5 kg/m³
Fixed temperature	–	Enter a fixed value for the process temperature. *Dependency* The unit is taken from the **Temperature unit** parameter	−200 to 450 °C	20 °C
2nd temperature delta heat	The **2nd temperature delta heat** parameter is visible.	Enter 2nd temperature value to calculate the delta heat. *Dependency* The unit is taken from the **Temperature unit** parameter	−200 to 450 °C	20 °C
Fixed process pressure	The following conditions are met: ▪ Order code for "Sensor version", Option "Mass flow (integrated temperature measurement)" ▪ In the **External value** parameter (→ 92) the **Pressure** option is not selected.	Enter fixed value for process pressure. *Dependency* The unit is taken from the **Pressure unit** parameter. For detailed information on the calculation of the measured variables with steam:	0 to 250 bar abs.	0 bar abs.

Carrying out a sensor adjustment

The **Sensor adjustment** submenu contains parameters that pertain to the functionality of the sensor.

Navigation

"Setup" menu → Advanced setup → Sensor adjustment

▶ Sensor adjustment	
Inlet configuration	→ 📄 93
Inlet run	→ 📄 93
Mating pipe diameter	→ 📄 93
Installation factor	→ 📄 93

Parameter overview with brief description

Parameter	Prerequisite	Description	Selection / User entry	Factory setting
Inlet configuration	The **inlet run correction** feature: ▪ Is a standard feature and can only be used in the Prowirl F 200. ▪ Can be used for the following pressure ratings and nominal diameters: DN 15 to 150 (NPS 1 to 6) ▪ EN (DIN) ▪ ASME B16.5, Sch. 40/80 ▪ JIS B2220	Select inlet configuration.	▪ Off ▪ Single elbow ▪ Double elbow ▪ Double elbow 3D ▪ Reduction	Off
Inlet run	The **inlet run correction** feature: ▪ Is a standard feature and can only be used in the Prowirl F 200. ▪ Can be used for the following pressure ratings and nominal diameters: DN 15 to 150 (NPS 1 to 6) ▪ EN (DIN) ▪ ASME B16.5, Sch. 40/80 ▪ JIS B2220	Enter length of the available straight inlet run. *Dependency* The unit is taken from: **Length unit** parameter	0 to 20 m	0 m
Mating pipe diameter	–	Enter diameter of mating pipe to enable diameter mismatch correction. Detailed information on diameter mismatch correction: → 📄 94 *Dependency* The unit is taken from the **Length unit** parameter.	0 to 1 m (0 to 3 ft) Input value = 0: Diameter mismatch correction is disabled.	Country-specific: ▪ 0 m ▪ 0 ft
Installation factor	–	Enter factor to compensate the mounting-related measurement error.	Positive floating-point number	1.0

Diameter mismatch correction

The measuring device is calibrated according to the ordered process connection. This calibration takes account of the edge at the transition from the mating pipe to the process connection. If the mating pipe used deviates from the ordered process connection, a diameter mismatch correction can compensate for the effects. The difference between the internal diameter of the ordered process connection and the internal diameter of the mating pipe used must be taken into consideration.

The measuring device can correct shifts in the calibration factor which are caused, for example, by a diameter mismatch between the device flange (e.g. ASME B16.5/Sch. 80, DN 50 (2")) and the mating pipe (e.g. ASME B16.5/Sch. 40, DN 50 (2")). Only apply diameter mismatch correction within the following limit values (listed below) for which test measurements have also been performed.

Flange connection:
- DN 15 (½"): ±20 % of the internal diameter
- DN 25 (1"): ±15 % of the internal diameter
- DN 40 (1½"): ±12 % of the internal diameter
- DN ≥ 50 (2"): ±10 % of the internal diameter

If the standard internal diameter of the ordered process connection differs from the internal diameter of the mating pipe, an additional measuring uncertainty of approx. 2 % o.r. must be expected.

Example
Influence of the diameter mismatch without using the correction function:
- Mating pipe DN 100 (4"), Schedule 80
- Device flange DN 100 (4"), Schedule 40
- This installation position results in a diameter mismatch of 5 mm (0.2 in). If the correction function is not used, an additional measuring uncertainty of approx. 2 % o.r. must be expected.
- If the basic conditions are met and the feature is enabled, the additional measuring uncertainty is 1 % o.r.

Configuring the totalizer

In the **"Totalizer 1 to n" submenu**, you can configure the specific totalizer.

Navigation
"Setup" menu → Advanced setup → Totalizer 1 to n

▶ Totalizer 1 to n	
Assign process variable 1 to n	→ 📄 95
Volume unit	→ 📄 95
Totalizer 1 to n failure behavior	→ 📄 95

Parameter overview with brief description

Parameter	Prerequisite	Description	Selection	Factory setting
Assign process variable 1 to n	–	Select process variable for totalizer.	▪ Off ▪ Volume flow ▪ Corrected volume flow ▪ Mass flow ▪ Total mass flow * ▪ Condensate mass flow * ▪ Energy flow * ▪ Heat flow difference *	▪ Totalizer 1: Volume flow ▪ Totalizer 2: Mass flow ▪ Totalizer 3: Corrected volume flow
Volume unit	–	Select volume unit.	Unit choose list	m^3
Totalizer 1 to n failure behavior	A process variable is selected in the **Assign process variable** parameter (→ 🗎 95) of the **Totalizer 1 to n** submenu.	Select totalizer behavior in the event of a device alarm.	▪ Hold ▪ Continue ▪ Last valid value + continue	Hold

* Visibility depends on order options or device settings

Carrying out additional display configurations

In the **Display** submenu you can set all the parameters associated with the configuration of the local display.

Navigation

"Setup" menu → Advanced setup → Display

▶ Display	
Format display	→ 📄 97
Value 1 display	→ 📄 97
0% bargraph value 1	→ 📄 97
100% bargraph value 1	→ 📄 97
Decimal places 1	→ 📄 97
Value 2 display	→ 📄 97
Decimal places 2	→ 📄 97
Value 3 display	→ 📄 97
0% bargraph value 3	→ 📄 97
100% bargraph value 3	→ 📄 98
Decimal places 3	→ 📄 98
Value 4 display	→ 📄 98
Decimal places 4	→ 📄 98
Display language	→ 📄 98
Display interval	→ 📄 98
Display damping	→ 📄 98
Header	→ 📄 98
Header text	→ 📄 98
Separator	→ 📄 98
Backlight	→ 📄 98

Parameter overview with brief description

Parameter	Prerequisite	Description	Selection / User entry	Factory setting
Format display	A local display is provided.	Select how measured values are shown on the display.	▪ 1 value, max. size ▪ 1 bargraph + 1 value ▪ 2 values ▪ 1 value large + 2 values ▪ 4 values	1 value, max. size
Value 1 display	A local display is provided.	Select the measured value that is shown on the local display.	▪ Volume flow ▪ Corrected volume flow ▪ Mass flow ▪ Flow velocity ▪ Temperature ▪ Vortex frequency ▪ Vortex kurtosis ▪ Vortex amplitude ▪ Calculated saturated steam pressure * ▪ Total mass flow * ▪ Condensate mass flow * ▪ Energy flow * ▪ Heat flow difference * ▪ Reynolds number * ▪ Density * ▪ Pressure * ▪ Specific volume * ▪ Degrees of superheat * ▪ Totalizer 1 ▪ Totalizer 2 ▪ Totalizer 3	Volume flow
0% bargraph value 1	A local display is provided.	Enter 0 % value for bar graph display.	Signed floating-point number	Country-specific: ▪ 0 m^3/h ▪ 0 ft^3/h
100% bargraph value 1	A local display is provided.	Enter 100 % value for bar graph display.	Signed floating-point number	Depends on country and nominal diameter
Decimal places 1	A measured value is specified in the **Value 1 display** parameter.	Select the number of decimal places for the display value.	▪ x ▪ x.x ▪ x.xx ▪ x.xxx ▪ x.xxxx	x.xx
Value 2 display	A local display is provided.	Select the measured value that is shown on the local display.	For the picklist, see **Value 1 display** parameter (→ 73)	None
Decimal places 2	A measured value is specified in the **Value 2 display** parameter.	Select the number of decimal places for the display value.	▪ x ▪ x.x ▪ x.xx ▪ x.xxx ▪ x.xxxx	x.xx
Value 3 display	A local display is provided.	Select the measured value that is shown on the local display.	For the picklist, see **Value 1 display** parameter (→ 73)	None
0% bargraph value 3	A selection was made in the **Value 3 display** parameter.	Enter 0 % value for bar graph display.	Signed floating-point number	Country-specific: ▪ 0 m^3/h ▪ 0 ft^3/h

Parameter	Prerequisite	Description	Selection / User entry	Factory setting
100% bargraph value 3	A selection was made in the **Value 3 display** parameter.	Enter 100 % value for bar graph display.	Signed floating-point number	0
Decimal places 3	A measured value is specified in the **Value 3 display** parameter.	Select the number of decimal places for the display value.	▪ x ▪ x.x ▪ x.xx ▪ x.xxx ▪ x.xxxx	x.xx
Value 4 display	A local display is provided.	Select the measured value that is shown on the local display.	For the picklist, see **Value 1 display** parameter (→ 🗎 73)	None
Decimal places 4	A measured value is specified in the **Value 4 display** parameter.	Select the number of decimal places for the display value.	▪ x ▪ x.x ▪ x.xx ▪ x.xxx ▪ x.xxxx	x.xx
Display language	A local display is provided.	Set display language.	▪ English ▪ Deutsch ▪ Français ▪ Español ▪ Italiano ▪ Nederlands ▪ Portuguesa ▪ Polski ▪ русский язык (Russian) ▪ Svenska ▪ Türkçe ▪ 中文 (Chinese) ▪ 日本語 (Japanese) ▪ 한국어 (Korean) ▪ tiếng Việt (Vietnamese) * ▪ čeština (Czech)	English (alternatively, the ordered language is preset in the device)
Display interval	A local display is provided.	Set time measured values are shown on display if display alternates between values.	1 to 10 s	5 s
Display damping	A local display is provided.	Set display reaction time to fluctuations in the measured value.	0.0 to 999.9 s	5.0 s
Header	A local display is provided.	Select header contents on local display.	▪ Device tag ▪ Free text	Device tag
Header text	The **Free text** option is selected in the **Header** parameter.	Enter display header text.	Max. 12 characters, such as letters, numbers or special characters (e.g. @, %, /)	----------
Separator	A local display is provided.	Select decimal separator for displaying numerical values.	▪ . (point) ▪ , (comma)	. (point)
Backlight	Order code for "Display; operation", option **E** "SD03 4-line, illum.; touch control + data backup function"	Switch the local display backlight on and off.	▪ Disable ▪ Enable	Disable

* Visibility depends on order options or device settings

Performing Heartbeat basic setup

Heartbeat setup submenu guides the user systematically through all the parameters that can be used for the Heartbeat basic setup.

The wizard only appears if the device has the Heartbeat Verification +Monitoring application package.

Navigation
"Setup" menu → Advanced setup → Heartbeat setup

▶ **Heartbeat setup**		
	▶ **Heartbeat base settings**	→ 📄 99

"Heartbeat base settings" submenu

Navigation
"Setup" menu → Advanced setup → Heartbeat setup → Heartbeat base settings

▶ **Heartbeat base settings**		
	Plant operator	→ 📄 99
	Location	→ 📄 99

Parameter overview with brief description

Parameter	Description	User entry
Plant operator	Enter the plant operator.	Max. 32 characters such as letters, numbers or special characters (e.g. @, %, /)
Location	Enter the location.	Max. 32 characters such as letters, numbers or special characters (e.g. @, %, /)

Using parameters for device administration

The **Administration** submenu systematically guides the user through all the parameters that can be used for device administration purposes.

Navigation
"Setup" menu → Advanced setup → Administration

▶ **Administration**		
	▶ **Define access code**	→ 📄 100
	▶ **Reset access code**	→ 📄 100
	Device reset	→ 📄 101

Using the parameter to define the access code

Complete this wizard to specify an access code for the Maintenance role.

Navigation
"Setup" menu → Advanced setup → Administration → Define access code

▶ Define access code		
	Define access code	→ 📄 100
	Confirm access code	→ 📄 100

Parameter overview with brief description

Parameter	Description	User entry
Define access code	Specify an access code that is required to obtain the access rights for the Maintenance role.	Max. 16-digit character string comprising numbers, letters and special characters
Confirm access code	Confirm the access code entered for the Maintenance role.	Max. 16-digit character string comprising numbers, letters and special characters

Using the parameter to reset the access code

Navigation
"Setup" menu → Advanced setup → Administration → Reset access code

▶ Reset access code		
	Reset access code	→ 📄 100

Parameter overview with brief description

Parameter	Description	User interface / User entry	Factory setting
Operating time	Indicates how long the device has been in operation.	Days (d), hours (h), minutes (m) and seconds (s)	–
Reset access code	Enter the code provided by Endress+Hauser Technical Support to reset the Maintenance code. ℹ For a reset code, contact your Endress+Hauser service organization. The reset code can only be entered via: ▪ Web browser ▪ DeviceCare, FieldCare (via CDI-RJ45 service interface) ▪ Fieldbus	Character string comprising numbers, letters and special characters	0x00

Using the parameter to reset the device

Navigation
"Setup" menu → Advanced setup → Administration

Parameter overview with brief description

Parameter	Description	Selection	Factory setting
Device reset	Reset the device configuration - either entirely or in part - to a defined state.	▪ Cancel ▪ To delivery settings ▪ Restart device	Cancel

10.5 Simulation

Via the **Simulation** submenu, it is possible to simulate various process variables in the process and the device alarm mode and verify downstream signal chains (switching valves or closed-control loops). The simulation can be performed without a real measurement (no flow of medium through the device).

Navigation

"Diagnostics" menu → Simulation

▶ Simulation	
Process variable simulation	→ 🗎 101
Process value	→ 🗎 101
Device alarm simulation	→ 🗎 101
Diagnostic event category	→ 🗎 102
Diagnostic event simulation	→ 🗎 102

Parameter overview with brief description

Parameter	Prerequisite	Description	Selection / User entry	Factory setting
Process variable simulation	–	Select a process variable for the simulation process that is activated.	▪ Off ▪ Volume flow ▪ Corrected volume flow ▪ Mass flow ▪ Flow velocity ▪ Temperature ▪ Calculated saturated steam pressure * ▪ Total mass flow * ▪ Condensate mass flow * ▪ Energy flow ▪ Heat flow difference * ▪ Reynolds number	Off
Process value	A process variable is selected in the **Assign simulation process variable** parameter (→ 🗎 101).	Enter the simulation value for the selected process variable.	Depends on the process variable selected	0
Device alarm simulation	–	Switch the device alarm on and off.	▪ Off ▪ On	Off

Parameter	Prerequisite	Description	Selection / User entry	Factory setting
Diagnostic event category	–	Select a diagnostic event category.	▪ Sensor ▪ Electronics ▪ Configuration ▪ Process	Process
Diagnostic event simulation	–	Select a diagnostic event to simulate this event.	▪ Off ▪ Diagnostic event picklist (depends on the category selected)	Off

* Visibility depends on order options or device settings

10.6 Protecting settings from unauthorized access

The following options exist for protecting the configuration of the measuring device from unintentional modification after commissioning:
- Write protection via access code
- Write protection via write protection switch
- Write protection via keypad lock

10.6.1 Write protection via access code

The effects of the user-specific access code are as follows:
- Via local operation, the parameters for the measuring device configuration are write-protected and their values can no longer be changed.
- Device access is protected via the Web browser, as are the parameters for the measuring device configuration.

Defining the access code via the local display

1. Navigate to the **Enter access code** parameter.
2. Maximum of 16-digit character string comprising numbers, letters and special characters as the access code.
3. Enter the access code again in the to confirm.
   ↳ The 🔒 symbol appears in front of all write-protected parameters.

- Disabling parameter write protection via access code → 📄 55.
- If the access code is lost: Resetting the access code .
- The user role with which the user is currently logged in is displayed in **Access status display** parameter.
  - Navigation path: Operation → Access status display
  - User roles and their access rights → 📄 55

- The device automatically locks the write-protected parameters again if a key is not pressed for 10 minutes in the navigation and editing view.
- The device locks the write-protected parameters automatically after 60 s if the user skips back to the operational display mode from the navigation and editing view.

Parameters which can always be modified via the local display

Certain parameters that do not affect the measurement are excepted from parameter write protection via the local display. Despite the user-specific access code, they can always be modified, even if the other parameters are locked.

10.6.2 Write protection via write protection switch

Unlike parameter write protection via a user-specific access code, this allows the user to lock write access to the entire operating menu - apart from the **"Contrast display" parameter**.

The parameter values are now read only and cannot be edited any more (exception **"Contrast display" parameter**):
Via local display

1. Loosen the securing clamp.
2. Unscrew the electronics compartment cover.
3. Pull out the display module with a gentle rotational movement. To make it easier to access the write protection switch, attach the display module to the edge of the electronics compartment.
   ↳ Display module is attached to the edge of the electronics compartment.

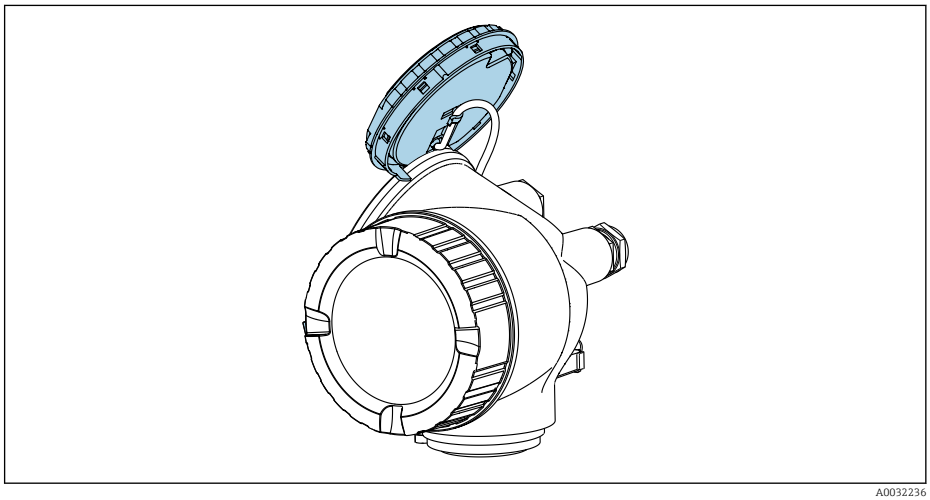

A0032236

4. Setting the write protection switch (WP) on the main electronics module to the **ON** position enables hardware write protection. Setting the write protection switch (WP) on the main electronics module to the **OFF** position (factory setting) disables hardware write protection.
   ↳ If the hardware write protection is enabled: The **Hardware locked** option is displayed in the **Locking status** parameter . In addition to this, the 🔒 symbol appears in the header of the measured value display and in the navigation view in front of the parameters.

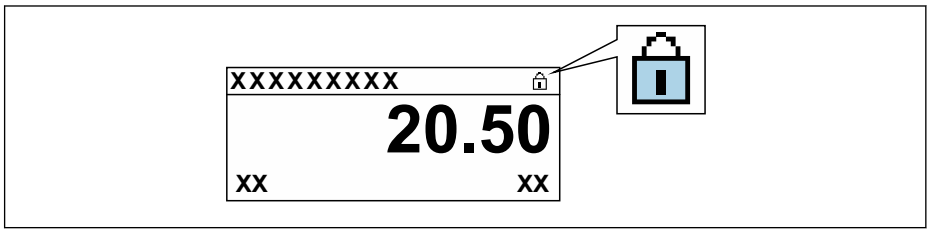

A0029425

   If hardware write protection is disabled: No option is displayed in the **Locking status** parameter . On the local display, the 🔒 symbol disappears from in front of the parameters in the header of the operational display and in the navigation view.

5. Feed the cable into the gap between the housing and main electronics module and plug the display module into the electronics compartment in the desired direction until it engages.
6. Reassemble the transmitter in the reverse order.

10.7 Application-specific commissioning

10.7.1 Steam application

Select medium

Navigation:

Setup → Medium selection

1. Open the **Medium selection** wizard.
2. In the **Select medium** parameter, select the **Steam** option.
3. When pressure measured value is read in [1]:
   In the **Steam calculation mode** parameter, select the **Automatic (p-/T-compensated)** option.
4. If pressure measured value is not read in:
   In the **Steam calculation mode** parameter, select the **Saturated steam (T-compensated)** option.
5. In the **Steam quality value** parameter, enter the steam quality present in the pipe.
   ↳ Measuring instrument uses this value to calculate the mass flow of the steam.

10.7.2 Liquid application

User-specific liquid, e. g. heat carrier oil

Select medium

Navigation:

Setup → Medium selection

1. Call up the **Medium selection** wizard.
2. In the **Select medium** parameter, select the **Liquid** option.
3. In the **Liquid type** parameter, select the **User-specific liquid** option.
4. In the **Enthalpy type** parameter, select the **Heat** option.
   ↳ **Heat** option: Non-flammable liquid that serves as a heat carrier.
   Calorific value option: Flammable liquid whose combustion energy is calculated.

Configuring fluid properties

Navigation:

Setup → Advanced setup → Medium properties

5. Call up the **Medium properties** submenu.
6. In the **Reference density** parameter, enter the reference density of the fluid.
7. In the **Reference temperature** parameter, enter the fluid temperature associated with the reference density.
8. In the **Linear expansion coefficient** parameter, enter the expansion coefficient of the fluid.
9. In the **Specific heat capacity** parameter, enter the heat capacity of the fluid.
10. In the **Dynamic viscosity** parameter, enter the viscosity of the fluid.

1) Sensor version option "Mass (integrated pressure and temperature measurement)", Pressure read in via

10.7.3 Gas applications

For accurate mass or corrected volume measurement, it is recommended to use the pressure-/temperature-compensated sensor version. If this sensor version is not available, read in the pressure via the . If neither of these two options is possible, the pressure can also be entered as a fixed value in the **Fixed process pressure** parameter.

Flow computer available only with the order code for "Sensor version", option "mass" (integrated temperature measurement)" or option "mass (integrated pressure/ temperature measurement)".

Single gas

Combustion gas, e. g. methane CH_4

Select medium

Navigation:

Setup → Medium selection

1. Call up the **Medium selection** wizard.
2. In the **Select medium** parameter, select the **Gas** option.
3. In the **Select gas type** parameter, select the **Single gas** option.
4. In the **Gas type** parameter, select the **Methane CH4** option.

Configuring medium properties

Navigation:

Setup → Advanced setup → Medium properties

5. Open the **Medium properties** submenu.
6. In the **Reference combustion temperature** parameter, enter the reference combustion temperature of the medium.

Configuring medium properties

Navigation:

Setup → Advanced setup → Medium properties

7. Open the **Medium properties** submenu.
8. In the **Reference combustion temperature** parameter, enter the reference combustion temperature of the medium.

Gas mixture

Forming gas for steel mills and rolling mills, e. g. N_2/H_2

Select medium

Navigation:

Setup → Medium selection

1. Call up the **Medium selection** wizard.
2. In the **Select medium** parameter, select the **Gas** option.
3. In the **Select gas type** parameter, select the **Gas mixture** option.

Configuring gas composition

Navigation:

Setup → Advanced setup → Medium properties → Gas composition

4. Call up the **Gas composition** submenu.
5. In the **Gas mixture** parameter, select the **Hydrogen H2** option and the **Nitrogen N2** option.
6. In the **Mol% H2** parameter, enter the quantity of hydrogen.
7. In the **Mol% N2** parameter, enter the quantity of nitrogen.
   ↳ All quantities must add up to 100 %.
   The density is determined according to NEL 40.

Configuring optional fluid properties for output of corrected volume flow

Navigation:

Setup → Advanced setup → Medium properties

8. Call up the **Medium properties** submenu.
9. In the **Reference pressure** parameter, enter the reference pressure of the fluid.
10. In the **Reference temperature** parameter, enter the reference temperature of the fluid.

Air

Select medium

Navigation:

Setup → Medium selection

1. Call up the **Medium selection** wizard.
2. In the **Select medium** parameter (→ 🗎 69), select the **Gas** option.
3. In the **Select gas type** parameter (→ 🗎 69), select the **Air** option.
   ↳ The density is determined according to NEL 40.
4. Enter the value in the **Relative humidity** parameter (→ 🗎 70).
   ↳ The relative humidity is entered as a %. The relative humidity is converted internally to absolute humidity and is then factored into the density calculation according to NEL 40.
5. In the **Fixed process pressure** parameter (→ 🗎 92), enter the value of the process pressure present.

Configuring fluid properties

Navigation:

Setup → Advanced setup → Medium properties

6. Call up the **Medium properties** submenu.
7. In the **Reference pressure** parameter (→ 🗎 79) enter the reference pressure for calculating the reference density.
   ↳ Pressure that is used as a static reference for combustion. This makes it possible to compare combustion processes at different pressures.
8. In the **Reference temperature** parameter (→ 🗎 79) enter the temperate for calculating the reference density.

ℹ Endress+Hauser recommends the use of active pressure compensation. This fully rules out the risk of measured errors due to pressure variations and incorrect entries .

Natural gas

Select medium

Navigation:

Setup → Medium selection

1. Call up the **Medium selection** wizard.
2. In the **Select medium** parameter (→ 🗎 69), select the **Gas** option.
3. In the **Select gas type** parameter (→ 🗎 69), select the **Natural gas** option.
4. In the **Fixed process pressure** parameter (→ 🗎 92), enter the value of the process pressure present.
5. In the **Enthalpy calculation** parameter (→ 🗎 71), select one of the following options:
   ↳ AGA5
   ISO 6976 option (contains GPA 2172)
6. In the **Density calculation** parameter (→ 🗎 71), select one of the following options.
   ↳ AGA Nx19
   ISO 12213- 2 option (contains AGA8-DC92)
   ISO 12213- 3 option (contains SGERG-88, AGA8 Gross Method 1)

Configuring fluid properties

Navigation:

Setup → Advanced setup → Medium properties

7. Call up the **Medium properties** submenu.
8. In the **Calorific value type** parameter, select one of the options.
9. n the **Reference gross calorific value** parameter, enter the reference gross calorific value of the natural gas.
10. In the **Reference pressure** parameter (→ 🗎 79) enter the reference pressure for calculating the reference density.
    ↳ Pressure that is used as a static reference for combustion. This makes it possible to compare combustion processes at different pressures.
11. In the **Reference temperature** parameter (→ 🗎 79) enter the temperate for calculating the reference density.
12. In the **Relative density** parameter, enter the relative density of the natural gas.

ℹ Endress+Hauser recommends the use of active pressure compensation. This fully rules out the risk of measured errors due to pressure variations and incorrect entries .

Ideal gas

The unit "corrected volume flow" is often used to measure industrial gas mixtures, in particular natural gas. To do so, the calculated mass flow is divided by a reference density. To calculate the mass flow, knowledge of the exact composition of the gas is essential. In practice, however, this information is often not available (e. g. as it varies over time). In this case, it can be useful to regard the gas as an ideal gas. This means that only the operating temperature and operating pressure variables as well as the reference temperature and reference pressure variables are needed to calculate the corrected volume flow. The error resulting from this assumption (typically 1 to 5 %) is often considerably smaller than the error caused by inaccurate composition data. This method should not be used for condensing gases (e. g. saturated steam).

Select medium

Navigation:

Setup → Medium selection

1. Call up the **Medium selection** wizard.
2. In the **Select medium** parameter, select the **Gas** option.
3. In the **Select gas type** parameter, select the **User-specific gas** option.
4. For non-flammable gas:
   In the **Enthalpy type** parameter, select the **Heat** option.

Configuring fluid properties

Navigation:

Setup → Advanced setup → Medium properties

5. Call up the **Medium properties** submenu.
6. In the **Reference density** parameter, enter the reference density of the fluid.
7. In the **Reference pressure** parameter, enter the reference pressure of the fluid.
8. In the **Reference temperature** parameter, enter the fluid temperature associated with the reference density.
9. In the **Reference Z-factor** parameter, enter the value **1**.
10. If specific heat capacity is to be measured:
    In the **Specific heat capacity** parameter, enter the heat capacity of the fluid.
11. In the **Z-factor** parameter, enter the value **1**.
12. In the **Dynamic viscosity** parameter, enter the viscosity of the fluid under operating conditions.

10.7.4 Calculation of the measured variables

A flow computer can be found in the electronics of the measuring device with order code for "Sensor version", option "mass (integrated temperature measurement)" and option "mass (integrated pressure/temperature measurement)". This computer can calculate the following secondary measured variables directly from the primary measured variables recorded using the pressure value (entered or external) and/or temperature value (measured or entered).

Mass flow and corrected volume flow

Medium	Fluid	Standards	Explanation
Steam [1)]	Water vapor	IAPWS-IF97/ ASME	▪ For integrated temperature measurement ▪ For fixed process pressure, pressure measured directly at the meter body or if the pressure is read in via
Gas	Single gas	NEL40	For fixed process pressure, pressure measured directly at the meter body or if the pressure is read in via
	Gas mixture	NEL40	
	Air	NEL40	
	Natural gas	ISO 12213-2	▪ Contains AGA8-DC92 ▪ For fixed process pressure, pressure measured directly at the meter body or if the pressure is read in via
		AGA NX-19	For fixed process pressure, pressure measured directly at the meter body or if the pressure is read in via
		ISO 12213-3	▪ Contains SGERG-88, AGA8 Gross Method 1 ▪ For fixed process pressure, pressure measured directly at the meter body or if the pressure is read in via
	Other gases	Linear equation	▪ Ideal gases ▪ For fixed process pressure, pressure measured directly at the meter body or if the pressure is read in via

Medium	Fluid	Standards	Explanation
Liquids	Water	IAPWS-IF97/ ASME	–
	Liquefied gas	Tables	Propane and butane mixture
	Other liquid	Linear equation	Ideal liquids

1) The measuring device is capable of calculating the volume flow, and other measured variables derived from the volume flow, across all steam types with full compensation using the pressure and temperature. To configure device behavior → 🗎 91

Mass flow calculation

Volume flow × operating density
- Operating density for saturated steam, water and other liquids: depends on the temperature
- Operating density for superheated steam and all other gases: depends on the temperature and process pressure

Corrected volume flow calculation

(Volume flow × operating density)/reference density
- Operating density for water and other liquids: depends on the temperature
- Operating density for all other gases: depends on the temperature and process pressure

Energy flow

Medium	Fluid	Standards	Explanation	Heat/energy option
Steam [1]	–	IAPWS-IF97/ASME	For fixed process pressure or if the pressure is read in via	Heat Gross calorific value [2] in relation to mass Net calorific value [3] in relation to mass Gross calorific value [2] in relation to corrected volume Net calorific value [3] in relation to corrected volume
Gas	Single gas	ISO 6976	▪ Contains GPA 2172 ▪ For fixed process pressure or if the pressure is read in via	
	Gas mixture	ISO 6976	▪ Contains GPA 2172 ▪ For fixed process pressure or if the pressure is read in via	
	Air	NEL40	For fixed process pressure or if the pressure is read in via	
	Natural gas	ISO 6976	▪ Contains GPA 2172 ▪ For fixed process pressure or if the pressure is read in via	
		AGA 5	–	
Liquids	Water	IAPWS-IF97/ASME	–	

Medium	Fluid	Standards	Explanation	Heat/energy option
	Liquefied gas	ISO 6976	Contains GPA 2172	
	Other liquid	Linear equation	–	

1) The measuring device is capable of calculating the volume flow, and other measured variables derived from the volume flow, across all steam types with full compensation using the pressure and temperature. To configure device behavior → 🗎 91
2) Gross calorific value: combustion energy + condensation energy of the flue gas (gross calorific value > net calorific value)
3) Net calorific value: only combustion energy

Mass flow and energy flow calculation

Steam is calculated based on the following factors:
- Fully compensated calculation of density using the "pressure" and "temperature" measured variables
- Calculation based on overheated steam until saturation point is reached
  Configuration of diagnostic behavior of the ⚠**S871 Near steam saturation limit** diagnostic message**Assign behavior of diagnostic no. 871** parameter set to **Off** option (factory setting) as standard → 🗎 127
  Optional configuration of diagnostic behavior to the **Alarm** option or **Warning** option option.
  At 2 K above saturation, activation of the ⚠**S871 Near steam saturation limit** diagnostic message.
- The smaller of the following two pressure values is always used to calculate the density:
  - Pressure measured directly at meter body or pressure read in via
  - Saturated steam pressure, which is derived from the saturated steam line (IAPWS-IF97/ASME)

For detailed information on how to perform external compensation, see → 🗎 91.

Calculated value

The unit calculates the mass flow, heat flow, energy flow, density and specific enthalpy from the measured volume flow and the measured temperature and/or the pressure based on international standard IAPWS-IF97/ASME.

Formulae for calculation:
- Mass flow: $\dot{m} = \dot{v} \cdot \rho\ (T, p)$
- Heat flow: $\dot{Q} = \dot{v} \cdot \rho\ (T, p) \cdot h_D\ (T, p)$

$\dot{m}$ = Mass flow

$\dot{Q}$ = Heat flow

$\dot{v}$ = Volume flow (measured)

h_D = Specific enthalpy

T = Process temperature (measured)

p = Process pressure

ρ = Density [2)]

2) From steam data as per IAPWS-IF97 (ASME), for the measured temperature and the specified pressure

Pre-programmed gases

The following gases are pre-programmed in the flow computer:

Hydrogen [1)]	Helium 4	Neon	Argon
Krypton	Xenon	Nitrogen	Oxygen
Chlorine	Ammonia	Carbon monoxide [1)]	Carbon dioxide
Sulfur dioxide	Hydrogen sulfide [1)]	Hydrogen chloride	Methane [1)]
Ethane [1)]	Propane [1)]	Butane [1)]	Ethylene (ethene) [1)]
Vinyl chloride	Mixtures of up to 8 components of these gases [1)]		

1) The energy flow is calculated as per ISO 6976 (contains GPA 2172) or AGA5 - in relation to the net calorific value or gross calorific value .

Energy flow calculation

Volume flow × operating density × specific enthalpy
- Operating density for saturated steam and water: depends on the temperature
- Operating density for superheated steam, natural gas ISO 6976 (contains GPA 2172), natural gasAGA5: depends on the temperature and pressure

Heat flow difference

- Between saturated steam upstream from a heat exchanger and condensate downstream from the heat exchanger (second temperature read in via) in accordance with IAPWS-IF97/ASME
- Between warm and cold water (second temperature read in via) in accordance with IAPWS-IF97/ASME

Vapor pressure and steam temperature

The measuring device can perform the following in saturated steam measurements between the feed line and return line of any heating liquid (second temperature read in via and Cp value entered:

- Calculation of saturation pressure of steam from the measured temperature and output in accordance with IAPWS-IF97/ASME
- Calculation of saturation temperature of steam from the preset pressure and output in accordance with IAPWS-IF97/ASME

11 Operation

11.1 Reading the device locking status

Device active write protection: **Locking status** parameter

Operation → Locking status

Function scope of the "Locking status" parameter

Options	Description
None	The access authorization displayed in the **Access status display** parameter applies → 📄 55. Only appears on local display.
Hardware locked	The DIP switch for hardware locking is activated on the main electronics module. This locks write access to the parameters (e.g. via local display or operating tool) → 📄 103.
Temporarily locked	Write access to the parameters is temporarily locked on account of internal processes running in the device (e.g. data upload/download, reset, etc.). Once the internal processing has been completed, the parameters can be changed again.

11.2 Adjusting the operating language

Detailed information:
- To configure the operating language → 📄 61
- For information on the operating languages supported by the measuring device → 📄 163

11.3 Configuring the display

Detailed information:
- On the basic settings for the local display
- On the advanced settings for the local display → 📄 96

11.4 Reading off measured values

With the **Measured values** submenu, it is possible to read all the measured values.

Navigation
"Diagnostics" menu → Measured values → Process variables

▶ **Measured values**	
▶ **Process variables**	→ 📄 112
▶ **Totalizers**	→ 📄 115

11.4.1 Process variables

The **Process variables** submenu contains all the parameters needed to display the current measured values for each process variable.

Navigation
"Diagnostics" menu → Measured values → Process variables

▶ Process variables	
Volume flow	→ 114
Corrected volume flow	→ 114
Mass flow	→ 114
Flow velocity	→ 114
Temperature	→ 114
Vortex frequency	→ 114
Vortex kurtosis	→ 114
Vortex amplitude	→ 114
Calculated saturated steam pressure	→ 114
Steam quality	→ 114
Total mass flow	→ 114
Condensate mass flow	→ 114
Energy flow	→ 114
Heat flow difference	→ 114
Reynolds number	→ 114
Density	→ 114
Specific volume	→ 115
Pressure	→ 115
Compressibility factor	→ 115
Degrees of superheat	→ 115

Parameter overview with brief description

Parameter	Prerequisite	Description	User interface	Factory setting
Volume flow	–	Displays the volume flow currently measured. *Dependency* The unit is taken from the **Volume flow unit** parameter	Signed floating-point number	–
Corrected volume flow	–	Displays the corrected volume flow currently calculated. *Dependency* The unit is taken from the **Corrected volume flow unit** parameter	Signed floating-point number	–
Mass flow	–	Displays the mass flow currently measured. *Dependency* The unit is taken from the **Mass flow unit** parameter	Signed floating-point number	–
Flow velocity	–	Shows the flow velocity currently calculated.	Signed floating-point number	1 m/s
Temperature	–	Displays the temperature currently measured. *Dependency* The unit is taken from the **Temperature unit** parameter	Signed floating-point number	–
Vortex frequency	–	Shows the vortex frequency registered by the DSC sensor in the measuring tube.	**Measuring range depending on the nominal diameter:** 0.1 to 3 100 Hz	–
Vortex kurtosis	–	Shows the statistical variable kurtosis, which serves to assess the signal quality (no unit).	0 to 10	–
Vortex amplitude	–	Shows the average vortex amplitude (no unit).	0 to 1	–
Calculated saturated steam pressure	–	Shows the saturated steam pressure currently calculated.	Signed floating-point number	1E-05 bar
Steam quality	–	Shows the current steam quality.	Signed floating-point number	1 %
Total mass flow	–	Shows the total mass flow (steam and condensate) currently calculated.	Signed floating-point number	3 599.99999999971 kg/h
Condensate mass flow	–	Shows the condensate mass flow currently calculated.	Signed floating-point number	3 599.99999999971 kg/h
Energy flow	–	Shows the energy flow currently calculated.	Signed floating-point number	0.001 kW
Heat flow difference	–	Shows the heat flow difference currently calculated.	Signed floating-point number	0.001 kW
Reynolds number	–	Shows the Reynolds number currently calculated.	Signed floating-point number	1
Density	With order code for "Sensor version": Option "Mass (integrated temperature measurement)"	Displays the density currently measured. *Dependency* The unit is taken from the **Density unit** parameter.	Positive floating-point number	–

Parameter	Prerequisite	Description	User interface	Factory setting
Specific volume	With order code for "Sensor version": Option "Mass (integrated temperature measurement)"	Displays the current value for the specific volume. *Dependency* The unit is taken from the **Specific volume unit** parameter.	Positive floating-point number	–

Pressure	One of the following conditions is met:
	▪ Order code for "Sensor version",
	  ▪ Option "Mass (integrated temperature measurement)"
	  ▪ or
	▪ The **Pressure** option is selected in the **External value** parameter parameter.
		Displays the current process pressure.
		Dependency
		The unit is taken from the **Pressure unit** parameter.
			0 to 250 bar	–

Compressibility factor	The following conditions are met: Order code for "Sensor version" Option "Mass (integrated temperature measurement)" The **Gas** option or the **Steam** option is selected in the **Select medium** parameter.	Displays the compressibility factor currently calculated.	0 to 2	–
Degrees of superheat	In the **Select medium** parameter, the **Steam** option is selected.	Displays the degree of superheating currently calculated.	0 to 500 K	–

11.4.2 Totalizer

The **Totalizer** submenu contains all the parameters needed to display the current measured values for every totalizer.

Navigation

"Diagnostics" menu → Measured values → Totalizer

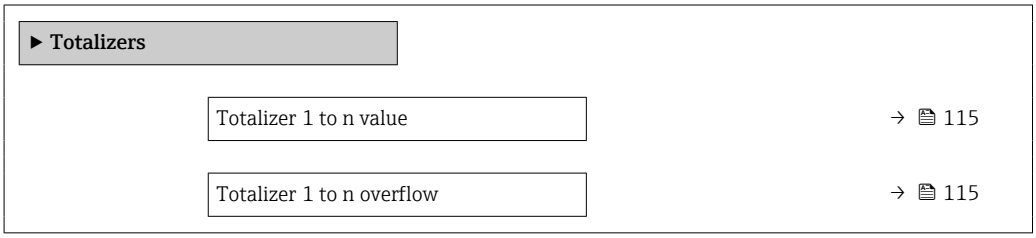

Parameter overview with brief description

Parameter	Description	User interface	Factory setting
Totalizer value	Displays the current totalizer counter value.	Signed floating-point number	0 m^3
Totalizer overflow	Displays the current totalizer overflow.	−32 000.0 to 32 000.0	0

11.5 Adapting the measuring device to the process conditions

The following are available for this purpose:
- Basic settings using the**Setup** menu (→ 🗎 61)
- Advanced settings using the**Advanced setup** submenu (→ 🗎 76)

11.6 Performing a totalizer reset

The totalizers are reset in the **Operation** submenu:
- Control Totalizer
- Reset all totalizers

Navigation
"Operation" menu → Totalizer handling

▶ **Totalizer handling**	
Totalizer 1 to n control	→ 🗎 116
Preset value 1 to n	→ 🗎 116
Reset all totalizers	→ 🗎 116

Parameter overview with brief description

Parameter	Prerequisite	Description	Selection / User entry	Factory setting
Totalizer 1 to n control	A process variable is selected in the **Assign process variable** parameter (→ 🗎 95) of the **Totalizer 1 to n** submenu.	Operate the totalizer.	▪ Totalize ▪ Reset + hold ▪ Preset + hold ▪ Reset + totalize ▪ Preset + totalize ▪ Hold	Totalize
Preset value 1 to n	A process variable is selected in the **Assign process variable** parameter (→ 🗎 95) of the **Totalizer 1 to n** submenu.	Specify start value for totalizer. *Dependency* ℹ	Signed floating-point number	Depends on country: ▪ 0 m³ ▪ 0 ft³
Reset all totalizers	–	Reset all totalizers to 0 and start.	▪ Cancel ▪ Reset + totalize	Cancel

11.6.1 Function scope of "Control Totalizer" parameter

Options	Description
Totalize	The totalizer is started or continues running.
Reset + hold	The totaling process is stopped and the totalizer is reset to 0.
Preset + hold [1)]	The totaling process is stopped and the totalizer is set to its defined start value from the **Preset value** parameter.

Options	Description
Reset + totalize	The totalizer is reset to 0 and the totaling process is restarted.
Preset + totalize [1]	The totalizer is set to the defined start value in the **Preset value** parameter and the totaling process is restarted.

1) Visible depending on the order options or device settings

11.6.2 Function range of "Reset all totalizers" parameter

Options	Description
Cancel	No action is executed and the user exits the parameter.
Reset + totalize	Resets all totalizers to 0 and restarts the totaling process. This deletes all the previously aggregated flow values.

11.7 Displaying the measured value history

The **Extended HistoROM** application package must be enabled in the device (order option) for the **Data logging** submenu to appear. This contains all the parameters for the measured value history.

Function scope
- A total of 1000 measured values can be stored
- 4 logging channels
- Adjustable logging interval for data logging
- Displays the measured value trend for each logging channel in the form of a chart

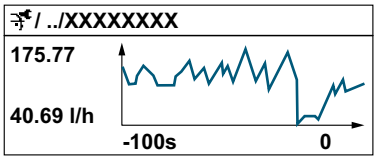

A0034352

- x-axis: depending on the number of channels selected displays 250 to 1000 measured values of a process variable.
- y-axis: displays the approximate measured value span and constantly adapts this to the ongoing measurement.

If the length of the logging interval or the assignment of the process variables to the channels is changed, the content of the data logging is deleted.

Navigation
"Diagnostics" menu → Data logging

▶ Data logging	
Assign channel 1	→ 118
Assign channel 2	→ 118
Assign channel 3	→ 119

Assign channel 4	→ 119
Logging interval	→ 119
Clear logging data	→ 119
Data logging	→ 119
Logging delay	→ 119
Data logging control	→ 119
Data logging status	→ 119
Entire logging duration	→ 119

Parameter overview with brief description

Parameter	Prerequisite	Description	Selection / User entry / User interface	Factory setting
Assign channel 1	The **Extended HistoROM** application package is available.	Assign process variable to logging channel.	▪ Off ▪ Volume flow ▪ Corrected volume flow ▪ Mass flow ▪ Flow velocity ▪ Temperature ▪ Vortex frequency ▪ Calculated saturated steam pressure * ▪ Steam quality * ▪ Total mass flow * ▪ Condensate mass flow * ▪ Energy flow * ▪ Heat flow difference * ▪ Reynolds number * ▪ Density * ▪ Pressure * ▪ Specific volume * ▪ Degrees of superheat * ▪ Electronics temperature	Off
Assign channel 2	The **Extended HistoROM** application package is available. The software options currently enabled are displayed in the **Software option overview** parameter.	Assign a process variable to logging channel.	For the picklist, see **Assign channel 1** parameter (→ 118)	Off

Parameter	Prerequisite	Description	Selection / User entry / User interface	Factory setting
Assign channel 3	The **Extended HistoROM** application package is available. The software options currently enabled are displayed in the **Software option overview** parameter.	Assign a process variable to logging channel.	For the picklist, see **Assign channel 1** parameter (→ 118)	Off
Assign channel 4	The **Extended HistoROM** application package is available. The software options currently enabled are displayed in the **Software option overview** parameter.	Assign a process variable to logging channel.	For the picklist, see **Assign channel 1** parameter (→ 118)	Off
Logging interval	The **Extended HistoROM** application package is available.	Define the logging interval for data logging. This value defines the time interval between the individual data points in the memory.	1.0 to 3 600.0 s	1.0 s
Clear logging data	The **Extended HistoROM** application package is available.	Clear the entire logging data.	▪ Cancel ▪ Clear data	Cancel
Data logging	–	Select the type of data logging.	▪ Overwriting ▪ Not overwriting	Overwriting
Logging delay	In the **Data logging** parameter, the **Not overwriting** option is selected.	Enter the time delay for measured value logging.	0 to 999 h	0 h
Data logging control	In the **Data logging** parameter, the **Not overwriting** option is selected.	Start and stop measured value logging.	▪ None ▪ Delete + start ▪ Stop	None
Data logging status	In the **Data logging** parameter, the **Not overwriting** option is selected.	Displays the measured value logging status.	▪ Done ▪ Delay active ▪ Active ▪ Stopped	Done
Entire logging duration	In the **Data logging** parameter, the **Not overwriting** option is selected.	Displays the total logging duration.	Positive floating-point number	0 s

* Visibility depends on order options or device settings

12 Diagnostics and troubleshooting

12.1 General troubleshooting

For local display

Fault	Possible causes	Remedial action
Local display is dark, but signal output is within the valid range	The cable of the display module is not plugged in correctly.	Insert the plug correctly into the main electronics module and display module.
Local display dark and no output signals	Supply voltage does not match the voltage specified on the nameplate.	Apply the correct supply voltage → 🗎 33.
Local display dark and no output signals	Supply voltage has incorrect polarity.	Reverse polarity of supply voltage.
Local display dark and no output signals	No contact between connecting cables and terminals.	Check the electrical contact between the cable and terminals and correct if necessary.
Local display dark and no output signals	Terminals are not plugged into the I/O electronics module correctly.	Check terminals.
Local display dark and no output signals	I/O electronics module is defective.	Order spare part → 🗎 136.
Local display dark and output signals in failure current	Sensor short-circuit, electronics module short-circuit	1. Contact service organization.
Local display cannot be read, but signal output is within the valid range	Display is set too bright or too dark.	▪ Set the display brighter by simultaneously pressing ⊞ + Ⓔ. ▪ Set the display darker by simultaneously pressing ⊟ + Ⓔ.
Local display is dark, but signal output is within the valid range	Display module is defective.	Order spare part → 🗎 136.
Backlighting of local display is red	Diagnostic event with "Alarm" diagnostic behavior has occurred.	Take remedial actions → 🗎 127
Text on local display appears in a language that cannot be understood.	The selected operating language cannot be understood.	1. Press ⊟ + ⊞ for 2 s ("home position"). 2. Press Ⓔ. 3. Configure the required language in the **Display language** parameter (→ 🗎 74).
Message on local display: "Communication Error" "Check Electronics"	Communication between the display module and the electronics is interrupted.	▪ Check the cable and the connector between the main electronics module and display module. ▪ Order spare part → 🗎 136.

For output signals

Fault	Possible causes	Remedial action
Signal output outside the valid range	Main electronics module is defective.	Order spare part → 🗎 136.
Device shows correct value on local display, but signal output is incorrect, though in the valid range.	Parameter configuration error	Check and adjust parameter configuration.
Device is measuring incorrectly.	Configuration error or device is operated outside the application.	1. Check and correct parameter configuration. 2. Observe limit values specified in the "Technical Data".

For access

Fault	Possible causes	Remedial action
Write access to parameters is not possible.	Hardware write protection is enabled.	Set the write protection switch on the main electronics module to the **OFF** position → 📄 103.
Write access to parameters is not possible.	Current user role has limited access authorization.	1. Check user role → 📄 55. 2. Enter correct customer-specific access code → 📄 55.
Connection via the service interface is not possible.	▪ The USB port on the PC is incorrectly configured. ▪ The driver is not installed correctly.	Observe the documentation for the Commubox FXA291: Technical Information TI00405C

12.2 Diagnostic information via LEDs

12.2.1 Transmitter

Various LEDs in the transmitter provide information on the device status.

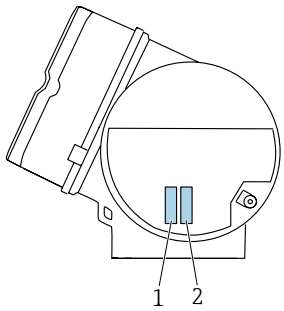

A0050832

LED		Color	Meaning
1	Device status/module status (normal operation)	Off	Firmware error/no supply voltage
		Green	Device status is OK.
		Flashing green	Device is not configured.
		Flashing red	A diagnostic event with "Warning" diagnostic behavior has occurred.
		Red	A diagnostic event with "Alarm" diagnostic behavior has occurred.
		Flashing red/green	The device restarts/self-test.
2	Flashing/network status	Green	Cyclic data exchange is active.
		Flashing green	Following request from automation system: Flash frequency: 1 Hz (flash functionality: 500 ms on, 500 ms off) If no "Name of Station" is defined, the LED flashes at 4 Hz. Display: no "Name of Station" available.
		Red	IP address is available but there is no connection to the automation system
		Flashing red	Cyclic data exchange was active but the connection was disconnected: Flash frequency: 3 Hz

12.3 Diagnostic information on local display

12.3.1 Diagnostic message

Faults detected by the self-monitoring system of the measuring instrument are displayed as a diagnostic message in alternation with the operational display.

Operational display in alarm condition	Diagnostic message

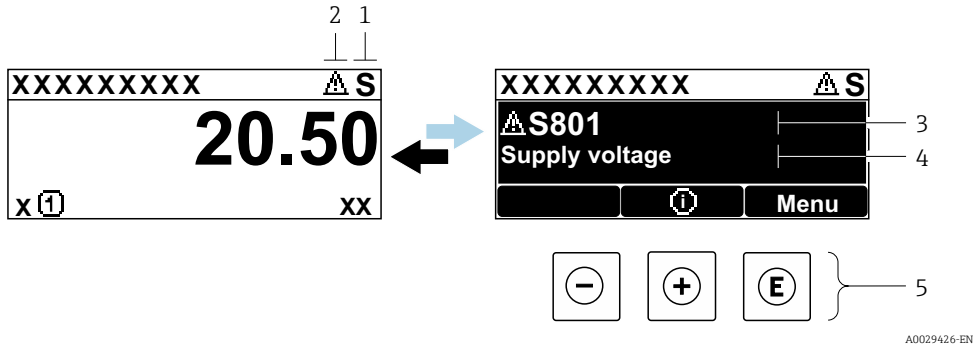

1 *Status signal*
2 *Diagnostic behavior*
3 *Diagnostic behavior with diagnostic code*
4 *Event text*
5 *Operating elements*

If two or more diagnostic events are pending simultaneously, only the message of the diagnostic event with the highest priority is shown.

Other diagnostic events that have occurred can be displayed in the **Diagnostics** menu:
- Via parameter → 127
- Via submenus → 128

Status signals

The status signals provide information on the state and reliability of the device by categorizing the cause of the diagnostic information (diagnostic event).

The status signals are categorized in accordance with VDI/VDE 2650 and NAMUR Recommendation NE 107:
- F = Failure
- C = Function Check
- S = Out of Specification
- M = Maintenance Required

Symbol	Meaning
F	**Failure** A device error has occurred. The measured value is no longer valid.
C	**Function check** The device is in the service mode (e.g. during a simulation).
S	**Out of specification** The device is being operated: Outside its technical specification limits (e.g. outside the process temperature range)
M	**Maintenance required** Maintenance is required. The measured value remains valid.

Diagnostic behavior

Symbol	Meaning
	Alarm ▪ Measurement is interrupted. ▪ Signal outputs and totalizers assume the defined alarm condition. ▪ A diagnostic message is generated. ▪ For local display with touch control: the background lighting changes to red.
	Warning ▪ Measurement is resumed. ▪ The signal outputs and totalizers are not affected. ▪ A diagnostic message is generated.

Diagnostic information

The fault can be identified using the diagnostic information. The short text helps you by providing information about the fault. In addition, the corresponding symbol for the diagnostic behavior is displayed in front of the diagnostic information on the local display.

Operating elements

Operating key	Meaning
	Plus key *In menu, submenu* Opens the message about the remedial measures.
	Enter key *In menu, submenu* Opens the operating menu.

12.3.2 Calling up remedial actions

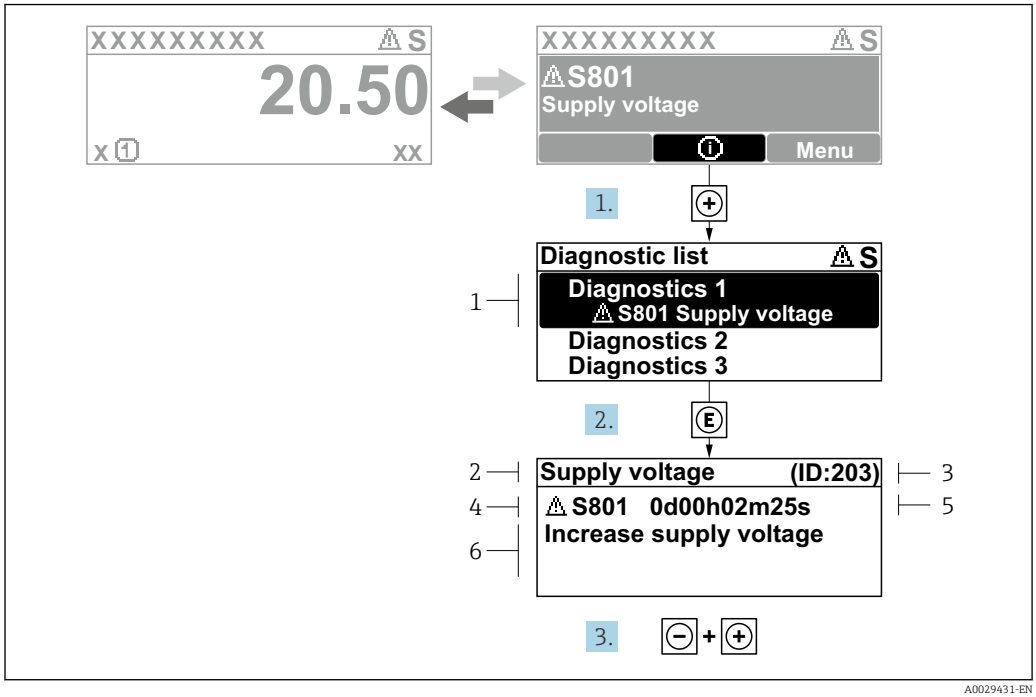

18 *Message for remedial actions*

1 *Diagnostic information*
2 *Event text*
3 *Service ID*
4 *Diagnostic behavior with diagnostic code*
5 *Operating time of occurrence*
6 *Remedial actions*

1. The user is in the diagnostic message.
   Press ⊞ (ⓘ symbol).
   ↳ The **Diagnostic list** submenu opens.
2. Select the desired diagnostic event with ⊞ or ⊟ and press Ⓔ .
   ↳ The message about the remedial measures opens.
3. Press ⊟ + ⊞ simultaneously.
   ↳ The message about the remedial measures closes.

The user is in the **Diagnostics** menu in the **Diagnostic list** submenu. A list of active diagnostics is displayed. The user can select a diagnostic event.

1. Press Ⓔ.
   ↳ The message for the remedial actions for the selected diagnostic event opens.
2. Press ⊟ + ⊞ simultaneously.
   ↳ The message about the remedial actions closes.

12.4 Diagnostic information in the web browser

12.4.1 Diagnostic options

Any faults detected by the measuring device are displayed in the Web browser on the home page once the user has logged on.

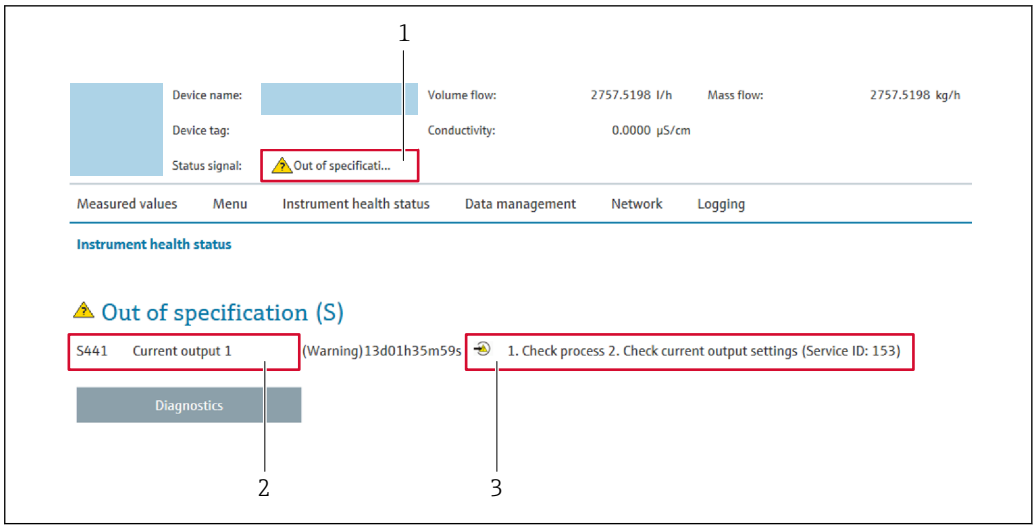

A0031056

1 *Status area with status signal*
2 *Diagnostic information*
3 *Remedial measures with service ID*

In addition, diagnostic events which have occurred can be shown in the **Diagnostics** menu:
- Via parameter → 127
- Via submenu → 128

Status signals

The status signals provide information on the state and reliability of the device by categorizing the cause of the diagnostic information (diagnostic event).

Symbol	Meaning
	Failure A device error has occurred. The measured value is no longer valid.
	Function check The device is in service mode (e.g. during a simulation).
	Out of specification The device is being operated: Outside its technical specification limits (e.g. outside the process temperature range)
	Maintenance required Maintenance is required. The measured value remains valid.

The status signals are categorized in accordance with VDI/VDE 2650 and NAMUR Recommendation NE 107.

12.4.2 Calling up remedial actions

Remedial actions are provided for each diagnostic event to ensure that problems can be rectified quickly. These actions are displayed along with the diagnostic event and the related diagnostic information.

12.5 Diagnostic information in FieldCare or DeviceCare

12.5.1 Diagnostic options

Any faults detected by the measuring device are displayed on the home page of the operating tool once the connection has been established.

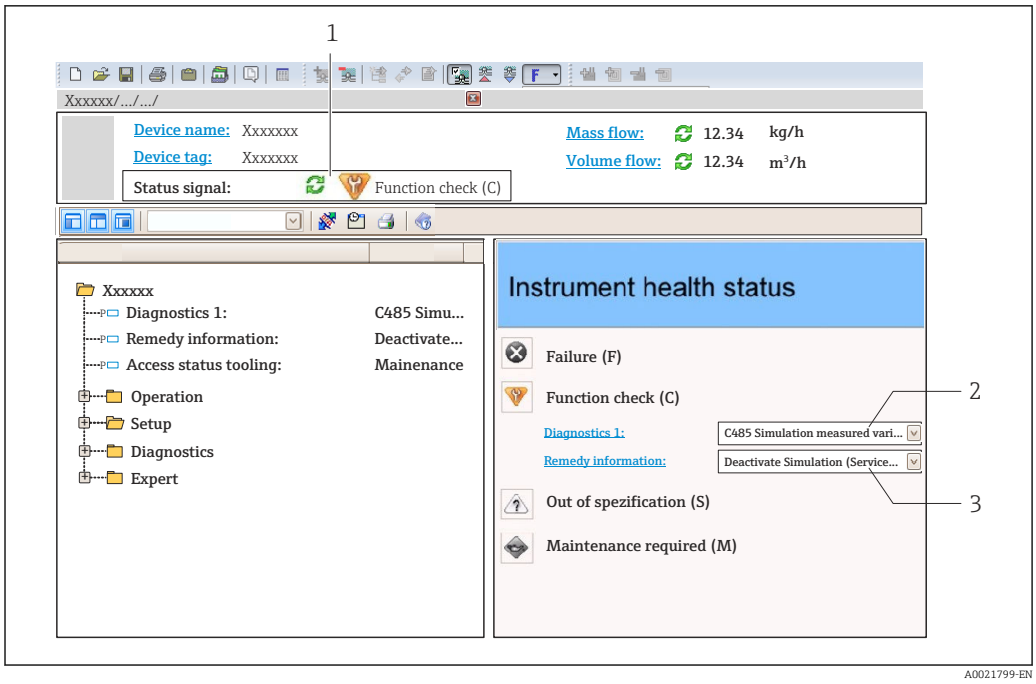

1 *Status area with status signal → 122*
2 *Diagnostic information → 123*
3 *Remedial actions with service ID*

In addition, diagnostic events which have occurred can be shown in the **Diagnostics** menu:
- Via parameter → 127
- Via submenu → 128

Diagnostic information

The fault can be identified using the diagnostic information. The short text helps you by providing information about the fault. In addition, the corresponding symbol for the diagnostic behavior is displayed in front of the diagnostic information on the local display.

12.5.2 Calling up remedy information

Remedy information is provided for every diagnostic event to ensure that problems can be rectified quickly:
- On the home page
  Remedy information is displayed in a separate field below the diagnostics information.
- In the **Diagnostics** menu
  Remedy information can be called up in the working area of the user interface.

The user is in the **Diagnostics** menu.

1. Call up the desired parameter.
2. On the right in the working area, mouse over the parameter.
   ↳ A tool tip with remedy information for the diagnostic event appears.

12.6 Adapting the diagnostic behavior

Each item of diagnostic information is assigned a specific diagnostic behavior at the factory. The user can change this assignment for specific diagnostic information in the **Diagnostic behavior** submenu.

Expert → System → Diagnostic handling → Diagnostic behavior

12.7 Overview of diagnostic information

The amount of diagnostic information and the number of measured variables affected increase if the measuring device has one or more application packages.

12.7.1 Operating conditions for displaying the following diagnostics information

Operating conditions for displaying the following diagnostics information:
- **871 Near steam saturation limit** diagnostic message: The process temperature is less than 2K from the saturated steam line.
- Diagnostics information 872: The measured steam quality has dropped below the configured limit value for the steam quality (limit value: Expert → System → Diagnostic handling → Diagnostic limits → Steam quality limit).
- Diagnostics information 873: The process temperature is ≤ 0 °C.
- Diagnostics information 972: The degree of superheat has exceeded the configured limit value (limit value: Expert → System → Diagnostic handling → Diagnostic limits → Degrees of superheat limit).

12.7.2 Emergency mode in event of temperature compensation

▶ Change temperature measurement: PT1+PT2 to the **PT1** option, **PT2** option or the **Off** option.
  ↳ If the **Off** option is selected, the measuring device calculates by using the fixed process pressure.

12.8 Pending diagnostic events

The **Diagnostics** menu allows the user to view the current diagnostic event and the previous diagnostic event separately.

To call up the remedial actions to rectify a diagnostic event:
- Via local display → 📄 122
- Via "FieldCare" operating tool → 📄 125
- Via "DeviceCare" operating tool → 📄 125

Other pending diagnostic events can be displayed in the **Diagnostic list** submenu → 📄 128.

Navigation
"Diagnostics" menu

Diagnostics	
Actual diagnostics	→ 📄 128
Previous diagnostics	→ 📄 128
Operating time from restart	→ 📄 128
Operating time	→ 📄 128

Parameter overview with brief description

Parameter	Prerequisite	Description	User interface
Actual diagnostics	A diagnostic event has occurred.	Shows the current occured diagnostic event along with its diagnostic information. If two or more messages occur simultaneously, the message with the highest priority is shown on the display.	Symbol for diagnostic behavior, diagnostic code and short message.
Previous diagnostics	Two diagnostic events have already occurred.	Shows the diagnostic event that occurred prior to the current diagnostic event along with its diagnostic information.	Symbol for diagnostic behavior, diagnostic code and short message.
Operating time from restart	–	Shows the time the device has been in operation since the last device restart.	Days (d), hours (h), minutes (m) and seconds (s)
Operating time	–	Indicates how long the device has been in operation.	Days (d), hours (h), minutes (m) and seconds (s)

12.9 Diagnostic list

Up to 5 currently pending diagnostic events are displayed in the **Diagnostic list** submenu along with the associated diagnostic information. If more than 5 diagnostic events are pending, the events with the highest priority are shown on the display.

Navigation path
Diagnostics → Diagnostic list

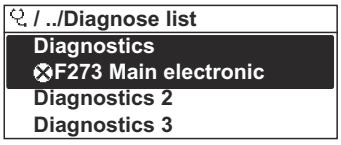

A0014006-EN

19 Using the example of the local display

To call up the remedial actions to rectify a diagnostic event:
- Via local display → 122
- Via "FieldCare" operating tool → 125
- Via "DeviceCare" operating tool → 125

12.10 Event logbook

12.10.1 Reading out the event logbook

A chronological overview of the event messages that have occurred is provided in the **Events list** submenu.

Navigation path
Diagnostics menu → **Event logbook** submenu → Event list

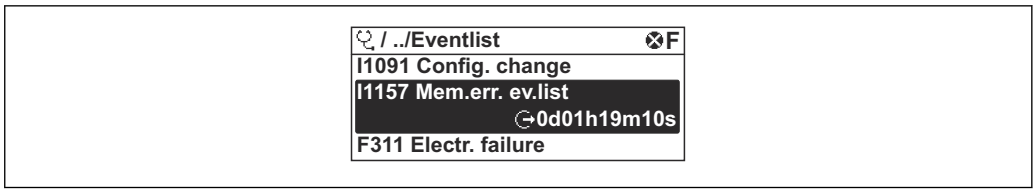

20 *Using the example of the local display*

- A maximum of 20 event messages can be displayed in chronological order.
- If the **Extended HistoROM** application package (order option) is enabled in the device, the event list can contain up to 100 entries.

The event history includes entries for:
- Diagnostic events → 127
- Information events → 129

In addition to the operating time when the event occurred, each event is also assigned a symbol that indicates whether the event has occurred or is finished:
- Diagnostic event
  - ⊖: Occurrence of the event
  - ⊖: End of the event
- Information event
  ⊖: Occurrence of the event

To call up the remedial actions to rectify a diagnostic event:
- Via local display → 122
- Via "FieldCare" operating tool → 125
- Via "DeviceCare" operating tool → 125

For filtering the displayed event messages → 129

12.10.2 Filtering the event logbook

Using the **Filter options** parameter you can define which category of event message is displayed in the **Events list** submenu.

Navigation path
Diagnostics → Event logbook → Filter options

Filter categories
- All
- Failure (F)
- Function check (C)
- Out of specification (S)
- Maintenance required (M)
- Information (I)

12.10.3 Overview of information events

Unlike a diagnostic event, an information event is displayed in the event logbook only and not in the diagnostic list.

Info number	Info name
I1000	--------(Device ok)
I1079	Sensor changed
I1089	Power on
I1090	Configuration reset
I1091	Configuration changed

Info number	Info name
I1092	HistoROM backup deleted
I1110	Write protection switch changed
I1137	Electronics changed
I1151	History reset
I1155	Reset electronics temperature
I1156	Memory error trend
I1157	Memory error event list
I1185	Display backup done
I1186	Restore via display done
I1187	Settings downloaded with display
I1188	Display data cleared
I1189	Backup compared
I1227	Sensor emergency mode activated
I1228	Sensor emergency mode failed
I1256	Display: access status changed
I1335	Firmware changed
I1361	Web server: login failed
I1397	Fieldbus: access status changed
I1398	CDI: access status changed
I1444	Device verification passed
I1445	Device verification failed
I1459	I/O module verification failed
I1461	Sensor verification failed
I1512	Download started
I1513	Download finished
I1514	Upload started
I1515	Upload finished
I1552	Failed: Main electronic verification
I1553	Failed: Preamplifier verification
I1622	Calibration changed
I1624	All totalizers reset
I1625	Write protection activated
I1626	Write protection deactivated
I1627	Web server: login successful
I1629	CDI: login successful
I1631	Web server access changed
I1634	Reset to factory settings
I1635	Reset to delivery settings
I1649	Hardware write protection activated
I1650	Hardware write protection deactivated

12.11 Resetting the device

The entire device configuration or some of the configuration can be reset to a defined state with the **Device reset** parameter (→ 101).

12.11.1 Function scope of the "Device reset" parameter

Options	Description
Cancel	No action is executed and the user exits the parameter.
To factory defaults	Every parameter is reset to the factory setting.
To delivery settings	Every parameter for which a customer-specific default setting was ordered is reset to the customer-specific value. All other parameters are reset to the factory setting. This option is not visible if no customer-specific settings have been ordered.
Restart device	The restart resets every parameter with data stored in volatile memory (RAM) to the factory setting (e.g. measured value data). The device configuration remains unchanged.

12.12 Device information

The **Device information** submenu contains all parameters that display different information for device identification.

Navigation
"Diagnostics" menu → Device information

▶ Device information	
Serial number	→ 132
Firmware version	→ 132
Device name	→ 132
Order code	→ 132
Extended order code 1	→ 132
Extended order code 2	→ 132
Extended order code 3	→ 132
ENP version	→ 132

Parameter overview with brief description

Parameter	Description	User interface	Factory setting
Serial number	Shows the serial number of the measuring device.	Max. 11-digit character string comprising letters and numbers.	–
Firmware version	Shows the device firmware version installed.	Character string in the format xx.yy.zz	–
Device name	Shows the name of the transmitter. The name can be found on the nameplate of the transmitter.	Character string comprising numbers, letters and special characters	Prowirl200 MBAPL
Order code	Shows the device order code. The order code can be found on the nameplate of the sensor and transmitter in the "Order code" field.	Character string composed of letters, numbers and certain punctuation marks (e.g. /).	–
Extended order code 1	Shows the 1st part of the extended order code. The extended order code can also be found on the nameplate of the sensor and transmitter in the "Ext. ord. cd." field.	Character string	–
Extended order code 2	Shows the 2nd part of the extended order code. The extended order code can also be found on the nameplate of the sensor and transmitter in the "Ext. ord. cd." field.	Character string	–
Extended order code 3	Shows the 3rd part of the extended order code. The extended order code can also be found on the nameplate of the sensor and transmitter in the "Ext. ord. cd." field.	Character string	–
ENP version	Shows the version of the electronic nameplate (ENP).	Character string	2.02.00

12.13 Firmware history

Release date	Firmware version	Order code for "Firmware version"	Firmware changes	Documentation type	Documentation
09.2025	01.00.zz	Option **68**	-	Operating Instructions	BA02399D/06/EN/01.25

It is possible to flash the firmware to the current version or an existing previous version via the service interface. For the compatibility of the firmware version, see the "Device history and compatibility" section

For the compatibility of the firmware version with the installed device description files and operating tools, observe the information about the device in the "Manufacturer's information" document.

The manufacturer's information is available:
- In the Download Area of the Endress+Hauser Web site: www.endress.com → Downloads
- Specify the following details:
  - Product root: e.g. 7F2C
    The product root is the first part of the order code: see the nameplate on the device.
  - Text search: Manufacturer's information
  - Media type: Documentation – Technical Documentation

13 Maintenance

13.1 Maintenance work

No special maintenance work is required.

13.1.1 Cleaning

Cleaning of surfaces not in contact with the medium

1. Recommendation: Use a lint-free cloth that is either dry or slightly dampened using water.
2. Do not use sharp objects or aggressive cleaning agents that could damage surfaces (e.g. displays, housing) and seals.
3. Do not use high-pressure steam.
4. Ensure compliance with the protection class of the device.

NOTICE

Cleaning agents can damage the surfaces!

Incorrect cleaning agents can damage the surfaces!

- ▶ Do not use cleaning agents containing concentrated mineral acids, alkalis or organic solvents e.g. benzyl alcohol, methylene chloride, xylene, concentrated glycerol cleaners or acetone.

Cleaning of surfaces in contact with the medium

Note the following for cleaning and sterilization in place (CIP/SIP):

- Use only cleaning agents to which the materials in contact with the medium are sufficiently resistant.
- Observe the permitted maximum medium temperature.

13.1.2 Replacing seals

Replacing sensor seals

NOTICE

Seals in contact with fluid must always be replaced!

- ▶ Only Endress+Hauser sensor seals may be used: replacement seals

Replacing housing seals

NOTICE

When using the device in a dusty atmosphere:

- ▶ only use the associated Endress+Hauser housing seals.

1. Replace defect seals only with original seals from Endress+Hauser.
2. The housing seals must be clean and undamaged when inserted into their grooves.
3. Dry, clean or replace the seals if necessary.

13.2 Measuring and test equipment

Endress+Hauser offers a variety of measuring and testing equipment, such as Netilion or device tests.

Your Endress+Hauser Sales Center can provide detailed information on the services.

List of some of the measuring and testing equipment: → 140

13.3 Endress+Hauser services

Endress+Hauser offers a wide variety of services for maintenance such as recalibration, maintenance service or device tests.

Your Endress+Hauser Sales Center can provide detailed information on the services.

14 Repair

14.1 General notes

14.1.1 Repair and conversion concept

The Endress+Hauser repair and conversion concept provides for the following:
- The measuring devices have a modular design.
- Spare parts are grouped into logical kits with the associated Installation Instructions.
- Repairs are carried out by Endress+Hauser Service or by appropriately trained customers.
- Certified devices can only be converted to other certified devices by Endress+Hauser Service or at the factory.

14.1.2 Notes for repair and conversion

For repair and conversion of a measuring device, observe the following notes:
- ▶ Use only original Endress+Hauser spare parts.
- ▶ Carry out the repair according to the Installation Instructions.
- ▶ Observe the applicable standards, federal/national regulations, Ex documentation (XA) and certificates.
- ▶ Document all repairs and conversions and enter the details in Netilion Analytics.

14.2 Spare parts

Some interchangeable measuring device components are listed on an overview sign in the connection compartment cover.

The spare part overview sign contains the following information:
- A list of the most important spare parts for the measuring device, including their ordering information.
- The URL to the *Device Viewer* (www.endress.com/deviceviewer):
  All the spare parts for the measuring device, along with the order code, are listed here and can be ordered. If available, users can also download the associated Installation Instructions.

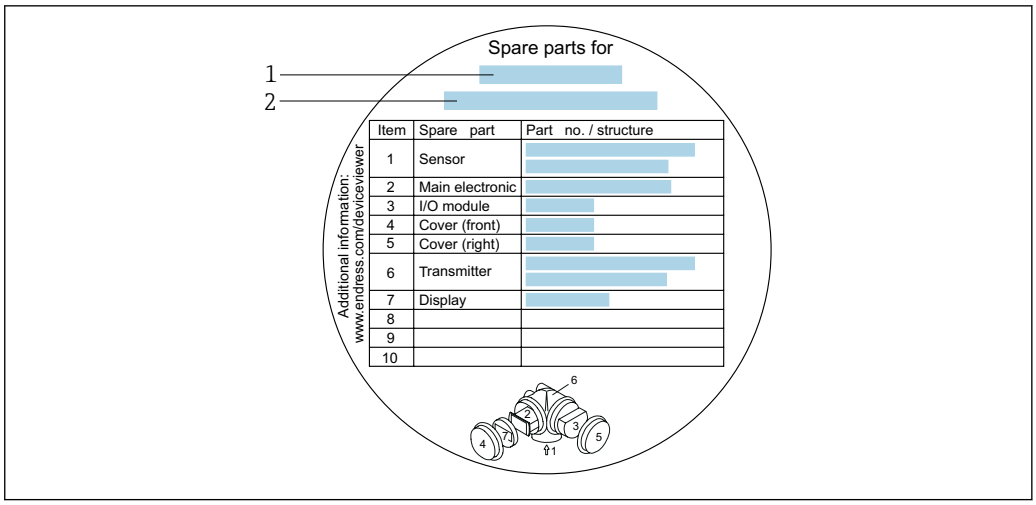

21 Example for "Spare part overview sign" in connection compartment cover

1 Measuring device name
2 Measuring device serial number

Measuring device serial number:
- Is located on the device nameplate and the spare part overview sign.
- Can be read out via the **Serial number** parameter (→ 132) in the **Device information** submenu.

14.3 Endress+Hauser services

Endress+Hauser offers a wide range of services.

Your Endress+Hauser Sales Center can provide detailed information on the services.

14.4 Return

The requirements for safe device return can vary depending on the device type and national legislation.

1. Refer to the web page for information: https://www.endress.com
2. If returning the device, pack the device in such a way that it is reliably protected against impact and external influences. The original packaging provides the best protection.

14.5 Disposal

If required by the Directive 2012/19/EU on waste electrical and electronic equipment (WEEE), the product is marked with the depicted symbol in order to minimize the disposal of WEEE as unsorted municipal waste. Do not dispose of products bearing this marking as unsorted municipal waste. Instead, return them to the manufacturer for disposal under the applicable conditions.

14.5.1 Removing the measuring device

1. Switch off the device.

⚠ WARNING

Danger to persons from process conditions!

- Beware of hazardous process conditions such as pressure in the measuring device, high temperatures or aggressive media.

2. Carry out the mounting and connection steps from the "Mounting the measuring device" and "Connecting the measuring device" sections in reverse order. Observe the safety instructions.

14.5.2 Disposing of the measuring device

⚠ WARNING

Danger to personnel and environment from fluids that are hazardous to health.

- Ensure that the measuring device and all cavities are free of fluid residues that are hazardous to health or the environment, e.g. substances that have permeated into crevices or diffused through plastic.

Observe the following notes during disposal:

- Observe valid federal/national regulations.
- Ensure proper separation and reuse of the device components.

15 Accessories

Various accessories, which can be ordered with the device or subsequently from Endress +Hauser, are available for the device. Detailed information on the order code in question is available from your local Endress+Hauser sales center or on the product page of the Endress+Hauser website: www.endress.com.

15.1 Device-specific accessories

15.1.1 For the transmitter

Accessories	Description
Prowirl 200 transmitter	Transmitter for replacement or storage. Use the order code to define the following specifications: ▪ Approvals ▪ Output, input ▪ Display/operation ▪ Housing ▪ Software Installation Instructions EA01056D (Order number: 7X2CXX)

Remote display FHX50	FHX50 housing for accommodating a display module .
	▪ FHX50 housing suitable for:
	  ▪ SD02 display module (push buttons)
	  ▪ SD03 display module (touch control)
	▪ Length of connecting cable: up to max. 60 m (196 ft) (cable lengths available for order: 5 m (16 ft), 10 m (32 ft), 20 m (65 ft), 30 m (98 ft))
	The measuring instrument can be ordered with the FHX50 housing and a display module. The following options must be selected in the separate order codes:
	▪ Order code for measuring instrument, feature 030: Option L or M "Prepared for FHX50 display"
	▪ Order code for FHX50 housing, feature 050 (measuring instrument version): Option A "Prepared for FHX50 display"
	▪ Order code for FHX50 housing, depends on the desired display module in feature 020 (display, operation):
	  ▪ Option C: for an SD02 display module (push buttons)
	  ▪ Option E: for an SD03 display module (touch control)
	The FHX50 housing can also be ordered as a retrofit kit. The measuring instrument display module is used in the FHX50 housing. The following options must be selected in the order code for the FHX50 housing:
	▪ Feature 050 (measuring instrument version): option B "Not prepared for FHX50 display"
	▪ Feature 020 (display, operation): option A "None, existing displayed used"
	Special Documentation SD01007F
	(Order number: FHX50)

Overvoltage protection for 2-wire devices	The use of an external overvoltage protection is recommended, e.g. HAW 569.
Protective cover	The protective cover is used to protect against direct sunlight, precipitation and ice. It can be ordered together with the device via the product structure: Order code for "Accessories enclosed" option PB "Protective cover" Special Documentation SD00333F (Order number: 71162242)
Transmitter holder (pipe mounting)	To secure the remote version to the pipe DN 20 to 80 (3/4 to 3") Order code for "Accessory enclosed", option PM

15.1.2 For the sensor

Accessories	Description
Flow conditioner	Is used to shorten the necessary inlet run. (Order number: DK7ST) Dimensions of flow conditioner

15.2 Service-specific accessories

Accessories	Description
Applicator	Software for selecting and sizing Endress+Hauser measuring instruments: ▪ Choice of measuring instruments for industrial requirements ▪ Calculation of all the necessary data for identifying the optimum flowmeter: e.g. nominal diameter, pressure loss, flow velocity and measurement accuracy. ▪ Graphic display of the calculation results ▪ Determination of the partial order code, administration, documentation and access to all project-related data and parameters over the entire life cycle of a project. Applicator is available: Via the Internet: https://portal.endress.com/webapp/applicator
Netilion	IIoT ecosystem: Unlock knowledge With the Netilion IIoT ecosystem,Endress+Hauser allows you to optimize your plant performance, digitize workflows, share knowledge, and enhance collaboration. Drawing upon decades of experience in process automation, Endress+Hauser offers the process industry an IIoT ecosystem designed to effortlessly extract insights from data. These insights can be used to optimize processes, leading to increased plant availability, efficiency, and reliability - ultimately resulting in a more profitable plant. www.netilion.endress.com
FieldCare	FDT-based plant asset management tool from Endress+Hauser. It can configure all intelligent field units in your system and helps you manage them. By using the status information, it is also a simple but effective way of checking their status and condition. Operating Instructions BA00027S and BA00059S
DeviceCare	Tool to connect and configure Endress+Hauser field devices. Innovation brochure IN01047S

15.3 System components

Accessories	Description
Memograph M graphic data manager	The Memograph M graphic data manager provides information on all the relevant measured variables. Measured values are recorded correctly, limit values are monitored and measuring points analyzed. The data are stored in the 256 MB internal memory and also on a SD card or USB stick. ▪ Technical Information TI00133R ▪ Operating Instructions BA00247R

16 Technical data

16.1 Application

The measuring device is intended for the flow measurement of liquids, gas and steam.

To ensure that the device remains in proper operating condition for its service life, use the measuring device only for media against which the process-wetted materials are sufficiently resistant.

16.2 Function and system design

Measuring principle

Vortex meters work on the principle of the *Karman vortex street*.

Measuring system

The device consists of a transmitter and a sensor.

Two device versions are available:
- Compact version - transmitter and sensor form a mechanical unit.
- Remote version - transmitter and sensor are mounted in separate locations.

For information on the structure of the measuring instrument → 📖 12

16.3 Input

Measured variable

Direct measured variables

Order code for "Sensor version; DSC sensor; measuring tube"		
Option	**Description**	**Measured variable**
BD	Volume high-temperature; Alloy 718; 316L	Volume flow

Order code for "Sensor version; DSC sensor; measuring tube"		
Option	**Description**	**Measured variable**
CD	Mass; Alloy 718; 316L (integrated temperature measurement)	▪ Volume flow ▪ Temperature

Order code for "Sensor version; DSC sensor; measuring tube"		
Option	**Description**	**Measured variable**
DC	Mass steam; Alloy 718; 316L (integrated pressure/temperature measurement)	▪ Volume flow ▪ Temperature ▪ Pressure
DD	Mass gas/liquid; Alloy 718; 316L (integrated pressure/temperature measurement)	

Calculated measured variables

Order code for "Sensor version; DSC sensor; measuring tube"		
Option	**Description**	**Measured variable**
BD	Volume high-temperature; Alloy 718; 316L	Under constant process conditions: ▪ Mass flow [1)] ▪ Corrected volume flow The totalized values for: ▪ Volume flow ▪ Mass flow ▪ Corrected volume flow

1) A fixed density must be entered for calculating the mass flow (**Setup** menu → **Advanced setup** submenu → **External compensation** submenu → **Fixed density** parameter).

Order code for "Sensor version; DSC sensor; measuring tube"		
Option	**Description**	**Measured variable**
CD	Mass; Alloy 718; 316L (integrated temperature measurement)	▪ Corrected volume flow ▪ Mass flow ▪ Calculated saturated steam pressure ▪ Energy flow ▪ Heat flow difference ▪ Specific volume ▪ Degrees of superheat
DC	Mass steam; Alloy 718; 316L (integrated pressure/ temperature measurement)	
DD	Mass gas/liquid; Alloy 718; 316L (integrated pressure/ temperature measurement)	

Measuring range

The measuring range is dependent on the nominal diameter, the fluid and environmental influences.

The following specified values are the largest possible flow measuring ranges (Q_{min} ... Q_{max}) for each nominal diameter. Depending on the fluid properties and environmental influences, the measuring range may be subject to additional restrictions. Additional restrictions apply to both the lower range value and the upper range value.

Flow measuring ranges in SI units

DN [mm]	Liquids [m³/h]	Gas/steam [m³/h]
15	0.1 to 4.9	0.52 to 25
25	0.32 to 15	1.6 to 130
40	0.63 to 30	3.1 to 250
50	0.99 to 47	4.9 to 620
80	2.4 to 110	12 to 1500
100	4.1 to 190	20 to 2600
150	9.3 to 440	47 to 5900
200	18 to 760	90 to 10000
250	28 to 1200	140 to 16000
300	40 to 1700	200 to 22000

Flow measuring ranges in US units

DN	Liquids	Gas/steam
[in]	[ft³/min]	[ft³/min]
½	0.061 to 2.9	0.31 to 15
1	0.19 to 8.8	0.93 to 74
1½	0.37 to 17	1.8 to 150
2	0.58 to 28	2.9 to 370
3	1.4 to 67	7 to 900
4	2.4 to 110	12 to 1 500
6	5.5 to 260	27 to 3 500
8	11 to 450	53 to 6 000
10	17 to 700	84 to 9 300
12	24 to 1 000	120 to 13 000

Flow velocity

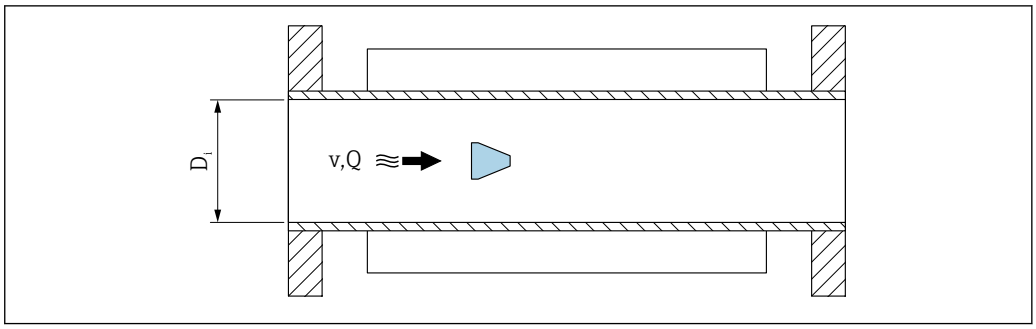

A0033468

D_i Measuring tube internal diameter (corresponds to dimension K)
v Velocity in measuring tube
Q Flow

The internal diameter of measuring tube D_i is denoted in the dimensions as dimension K.

For detailed information, see the Technical Information→ 167

Calculation of flow velocity:

$$v\ [m/s] = \frac{4 \cdot Q\ [m^3/h]}{\pi \cdot D_i\ [m]^2} \cdot \frac{1}{3600\ [s/h]}$$

$$v\ [ft/s] = \frac{4 \cdot Q\ [ft^3/min]}{\pi \cdot D_i\ [ft]^2} \cdot \frac{1}{60\ [s/min]}$$

A0034301

Lower range value

The Applicator is available for calculation purposes.

Reynolds number

A restriction applies to the lower range value due to the turbulent flow profile, which only occurs with Reynolds numbers greater than 5 000. The Reynolds number is dimensionless and indicates the ratio of the inertia force of a fluid to its viscous force when flowing and is used as a characteristic variable for pipe flows. In the case of pipe flows with Reynolds

numbers less than 5 000, periodic vortices are no longer generated and flow rate measurement is no longer possible.

The Reynolds number is calculated as follows:

$$Re = \frac{4 \cdot Q\ [m^3/s] \cdot \rho\ [kg/m^3]}{\pi \cdot D_i\ [m] \cdot \mu\ [Pa \cdot s]}$$

$$Re = \frac{4 \cdot Q\ [ft^3/s] \cdot \rho\ [lbm/ft^3]}{\pi \cdot D_i\ [ft] \cdot \mu\ [lbf \cdot s/ft^2]}$$

A0034291

Re	*Reynolds number*
Q	*Flow*
D_i	*Internal diameter of measuring tube (corresponds to dimension K)*
μ	*Dynamic viscosity*
ρ	*Density*

The Reynolds number 5 000, together with the density and viscosity of the fluid and the nominal diameter, is used to calculate the corresponding flow rate.

$$Q_{Re = 5000}\ [m^3/h] = \frac{5000 \cdot \pi \cdot D_i\ [m] \cdot \mu\ [Pa \cdot s]}{4 \cdot \rho\ [kg/m^3]} \cdot 3600\ [s/h]$$

$$Q_{Re = 5000}\ [ft^3/h] = \frac{5000 \cdot \pi \cdot D_i\ [ft] \cdot \mu\ [lbf \cdot s/ft^2]}{4 \cdot \rho\ [lbm/ft^3]} \cdot 60\ [s/min]$$

A0034302

$Q_{Re = 5000}$	*Flow rate at Reynolds number 5000*
D_i	*Internal diameter of measuring tube (corresponds to dimension K)*
μ	*Dynamic viscosity*
ρ	*Density*

Minimum measurable flow velocity based on signal amplitude

The measuring signal must have a certain minimum signal amplitude so that the signals can be evaluated without any errors. Using the nominal diameter, the corresponding flow can also be derived from this amplitude.

The minimum signal amplitude depends on the setting for the sensitivity of the DSC sensor, the steam quality **x** and the force of the vibrations present **a**.

The value **mf** corresponds to the lowest measurable flow velocity without vibration (no wet steam) for a density of 1 kg/m^3 (0.0624 lb/ft^3).

The value **mf** can be set in the range of 20 to 6 m/s (65.6 to 19.7 ft/s) (factory setting 11 m/s (36.1 ft/s)) with the **Sensitivity** parameter (value range 1 to 9, factory setting 5).

$$v_{AmpMin}\,[m/s] = \max \begin{cases} \dfrac{mf\,[m/s]}{x^2 \cdot \sqrt{\dfrac{\rho\,[kg/m^3]}{1\,[kg/m^3]}}} \\ \dfrac{\sqrt{50[m] \cdot a\,[m/s^2]}}{x^2} \end{cases}$$

$$v_{AmpMin}\,[ft/s] = \max \begin{cases} \dfrac{mf\,[ft/s]}{x^2 \cdot \sqrt{\dfrac{\rho\,[lbm/ft^3]}{0.0624\,[lbm/ft^3]}}} \\ \dfrac{\sqrt{164[ft] \cdot a\,[ft/s^2]}}{x^2} \end{cases}$$

A0034303

v_{AmpMin}	*Minimum measurable flow velocity based on signal amplitude*
mf	*Sensitivity*
x	*Steam quality*
ρ	*Density*

Minimum measurable flow rate based on signal amplitude

$$Q_{AmpMin}\,[m^3/h] = \frac{v_{AmpMin}\,[m/s] \cdot \pi \cdot (D_i\,[m])^2}{4} \cdot 3600\,[s/h]$$

$$Q_{AmpMin}\,[ft^3/min] = \frac{v_{AmpMin}\,[ft/s] \cdot \pi \cdot (D_i\,[ft])^2}{4} \cdot 60\,[s/min]$$

A0034304

Q_{AmpMin}	*Minimum measurable flow rate based on signal amplitude*
v_{AmpMin}	*Minimum measurable flow velocity based on signal amplitude*
D_i	*Internal diameter of measuring tube (corresponds to dimension K)*
ρ	*Density*

Effective lower range value

The effective lower range value Q_{min_eff} is determined using the largest of the three values Q_{min}, $Q_{Re = 5000}$ and Q_{AmpMin}.

$$Q_{min_eff}\,[m^3/h] = \max \begin{cases} Q_{min}\,[m^3/h] \\ Q_{Re = 5000}\,[m^3/h] \\ Q_{AmpMin}\,[m^3/h] \end{cases}$$

$$Q_{min_eff}\,[ft^3/min] = \max \begin{cases} Q_{min}\,[ft^3/min] \\ Q_{Re = 5000}\,[ft^3/min] \\ Q_{AmpMin}\,[ft^3/min] \end{cases}$$

A0034313

Q_{min_eff}	*Effective lower range value*
Q_{min}	*Minimum measurable flow rate*
$Q_{Re = 5000}$	*Flow rate at Reynolds number 5000*
Q_{AmpMin}	*Minimum measurable flow rate based on signal amplitude*

Upper range value

The Applicator is available for calculation purposes.

Maximum measurable flow rate based on signal amplitude

The measuring signal amplitude must be below a certain limit value to ensure that the signals can be evaluated without error. This results in a maximum permitted flow rate Q_{AmpMax}.

$$Q_{AmpMax}\ [m^3/h] = \frac{URV\ [m/s] \cdot \pi \cdot D_i\ [m]^2}{4 \cdot \sqrt{\frac{\rho\ [kg/m^3]}{1\ [kg/m^3]}}} \cdot 3600\ [s/h]$$

$$Q_{AmpMax}\ [ft^3/min] = \frac{URV\ [ft/s] \cdot \pi \cdot D_i\ [ft]^2}{4 \cdot \sqrt{\frac{\rho\ [lbm/ft^3]}{0.0624\ [lbm/ft^3]}}} \cdot 60\ [s/min]$$

A0034316

Q_{AmpMax}	*Maximum measurable flow rate based on signal amplitude*
D_i	*Internal diameter of measuring tube (corresponds to dimension K)*
ρ	*Density*
URV	Limit value for determining the maximum flow rate: ▪ DN 15 to 40: URV = 350 ▪ DN 50 to 300: URV = 600 ▪ NPS ½ to 1½: URV = 1148 ▪ NPS 2 to 12: URV = 1969

Restricted upper range value is dependent on Mach number

For gas applications, an additional restriction applies to the upper range value with regard to the Mach number in the measuring instrument, which must be less than 0.3. The Mach number Ma describes the ratio of the flow velocity v to the speed of sound c in the fluid.

$$Ma = \frac{v\ [m/s]}{c\ [m/s]}$$

$$Ma = \frac{v\ [ft/s]}{c\ [ft/s]}$$

A0034321

Ma	*Mach number*
v	*Flow velocity*
c	*Speed of sound*

The corresponding flow rate can be derived using the nominal diameter.

$$Q_{MaMax = 0.3}\ [m^3/h] = \frac{0.3 \cdot c\ [m/s] \cdot \pi \cdot D_i\ [m]^2}{4} \cdot 3600\ [s/h]$$

$$Q_{MaMax = 0.3}\ [ft^3/min] = \frac{0.3 \cdot c\ [ft/s] \cdot \pi \cdot D_i\ [ft]^2}{4} \cdot 60\ [s/min]$$

A0034337

$Q_{MaMax = 0.3}$	*Restricted upper range value is dependent on Mach number*
c	*Speed of sound*
D_i	*Internal diameter of measuring tube (corresponds to dimension K)*
ρ	*Density*

Effective upper range value

The effective upper range value Q_{max_eff} is determined using the smallest of the three values Q_{max}, Q_{AmpMax} and $Q_{MaMax = 0.3}$.

$$Q_{max_eff}\ [m^3/h] = \min \begin{cases} Q_{max}\ [m^3/h] \\ Q_{AmpMax}\ [m^3/h] \\ Q_{MaMax = 0.3}\ [m^3/h] \end{cases}$$

$$Q_{max_eff}\ [ft^3/min] = \min \begin{cases} Q_{max}\ [ft^3/min] \\ Q_{AmpMax}\ [ft^3/min] \\ Q_{MaMax = 0.3}\ [ft^3/min] \end{cases}$$

A0034338

Q_{max_eff}	*Effective upper range value*
Q_{max}	*Maximum measurable flow rate*
Q_{AmpMax}	*Maximum measurable flow rate based on signal amplitude*
$Q_{MaMax = 0.3}$	*Restricted upper range value is dependent on Mach number*

For liquids, the occurrence of cavitation may also restrict the upper range value.

Operable flow range

Typically up to 49: 1

The value may vary depending on the operating conditions (ratio between the effective lower range value and upper range value).

$$\frac{Q_{max_eff}}{Q_{min_eff}}$$

A0058819

Q_{max_eff}	*Effective upper range value*
Q_{min_eff}	*Effective lower range value*

Input signal

External measured values

To increase the measurement accuracy of certain measured variables or to calculate the corrected volume flow, the automation system can continuously write different measured values to the measuring instrument:
- Operating pressure to increase measurement accuracy (Endress+Hauser recommends the use of a pressure measuring instrument for absolute pressure, e.g. Cerabar M or Cerabar S)
- Medium temperature to increase measurement accuracy (e.g. iTEMP)
- Reference density for calculating the corrected volume flow

- Various pressure measuring devices can be ordered as accessories from Endress+Hauser.
- If using pressure measuring devices, pay attention to outlet runs when installing external devices→ 📄 22.

If the measuring instrument does not have pressure or temperature compensation [3], it is recommended that external pressure measured values be read in so that the following measured variables can be calculated:
- Energy flow
- Mass flow
- Corrected volume flow

Digital communication

The measured values are written from the automation system to the measuring instrument via Modbus TCP over Ethernet-APL.

16.4 Output

Output signal

Modbus TCP over Ethernet-APL

Device use	**Device connection to an APL field switch** The device may only be operated according to the following APL port classifications: ▪ If used in hazardous areas: SLAA or SLAC [1] ▪ If used in non-hazardous areas: SLAX ▪ Connection values of APL field switch (corresponds to APL port classification SPCC or SPAA): ▪ Maximum input voltage: 15 V_{DC} ▪ Minimum output values: 0.54 W **Device connection to an SPE switch** If used in non-hazardous areas: suitable SPE switch SPE switch prerequisite: ▪ Support of 10BASE-T1L standard ▪ Support of PoDL power class 10, 11 or 12 ▪ Detection of SPE field devices without integrated PoDL module Connection values of SPE switch: ▪ Maximum input voltage: 30 V_{DC} ▪ Minimum output values: 1.85 W
Modbus TCP over Ethernet-APL	Modbus application protocol V1.1b3
Ethernet-APL	According to IEEE 802.3cg, APL port profile specification v1.0, galvanically isolated
Data transfer	10 Mbit/s Full-duplex
Current consumption	**Transmitter** Max. 55.56 mA

3) Order code for "Sensor version", DSC sensor; measuring tube" optionDC, DD

Permitted supply voltage	▪ Ex: 9 to 15 V ▪ Non-Ex: 9 to 30 V
Network connection	With integrated reverse polarity protection

1) For more information on using the device in the hazardous area, see the Ex-specific Safety Instructions

Signal on alarm

Depending on the interface, failure information is displayed as follows:

Modbus TCP over Ethernet-APL/SPE

Failure mode	Choose from: ▪ NaN value instead of current value ▪ Last valid value

Local display

Plain text display	With information on cause and remedial measures
Backlight	Additionally for device version with SD03 local display: red lighting indicates a device error.

Status signal as per NAMUR recommendation NE 107

Interface/protocol

- Via digital communication:
  Modbus TCP over Ethernet-APL
- Via service interface
  Endress+Hauser service interface CDI (Common Data Interface)
- Plain text display
  - With information on cause and remedial action
  - Modbus TCP

LEDs

Status information	Status indicated by various LEDs The following information is displayed depending on the device version: ▪ Supply voltage active ▪ Data transmission active ▪ Network available ▪ Connection established ▪ Diagnostic status Diagnostic information via LEDs → 121

Low flow cut off

The switch points for low flow cut off are preset and can be configured.

Galvanic isolation

All inputs and outputs are galvanically isolated from one another.

Modbus TCP over Ethernet-APL

Protocol	▪ Modbus application protocol V1.1b3 applies in this document. ▪ TCP
Response times	On Modbus client request: Typically 3 to 5 ms
Modbus TCP port	502
TCP connections	Maximum 4
Communication type	Ethernet Advanced Physical Layer 10BASE-T1L
Data transfer	▪ 10 Mbit/s ▪ Full-duplex
Polarity	Automatic correction of crossed "APL signal + " and "APL signal -" signal lines
Device type	Address
Device type ID	0xC438
Function codes	▪ 03: Read holding register ▪ 04: Read input register ▪ 06: Write single registers ▪ 16: Write multiple registers ▪ 23: Read/write multiple registers ▪ 43: Read device identification
Broadcast support for function codes	▪ 06: Write single registers ▪ 16: Write multiple registers ▪ 23: Read/write multiple registers ▪ 43: Read device identification
Supported transfer speed	10 Mbit/s (APL)
Supported features	Address can be configured using DHCP or software
Device description files (FDI)	Information and files available at: ▪ www.endress.com → Downloads area ▪ www.profibus.com
Configuration options for measuring instrument	▪ Asset management software (FieldCare, DeviceCare, Field Expert) ▪ Integrated Web server via Web browser and IP address ▪ Local operation
Configuration options of the device name	▪ DHCP protocol ▪ Asset management software (FieldCare, DeviceCare, Field Expert) ▪ Integrated web server
Supported functions	▪ Device identification using: Nameplate ▪ Measured value status The process variables are communicated with a measured value status ▪ Device operation via asset management software (e.g FieldCare, DeviceCare)
System integration	Information regarding system integration . ▪ Status coding ▪ Factory setting

16.5 Power supply

Terminal assignment

→ 📄 31

Supply voltage

Transmitter

The following supply voltage values apply for the outputs available:

Supply voltage for a compact version

Order code for "Output; input"	Minimum Terminal voltage	Maximum Terminal voltage
Option **T** : Modbus TCP over Ethernet-APL/SPE, 10 Mbit/s	≥ DC 9 V	DC 30 V

Transient overvoltage: Up to overvoltage category I

Power consumption

Transmitter

Order code for "Output; input"	Maximum power consumption
Option T: Modbus TCP over Ethernet-APL/SPE, 10 Mbit/s	Operation with output 1: Ex: 833 mW Non-Ex: 1.5 W

Current consumption

20 to 55.56 mA

Power supply failure

- Totalizers stop at the last value measured.
- Depending on the device version, the configuration is retained in the device memory or in the plug-in memory (HistoROM DAT).
- Error messages (incl. total operated hours) are stored.

Electrical connection

→ 📄 33

Potential equalization

→ 📄 39

Terminals

For device version without integrated overvoltage protection: plug-in spring terminals for wire cross-sections 0.5 to 2.5 mm^2 (20 to 14 AWG)

Cable entries

The type of cable entry available depends on the specific device version.

Cable gland (not for Ex d)
M20 × 1.5

Thread for cable entry
- NPT ½"
- G ½"
- M20 × 1.5

Cable specification

→ 📄 30

Overvoltage protection

The use of an external overvoltage protection e.g. HAW 569 is recommended.

16.6 Performance characteristics

Reference operating conditions

- Error limits following ISO/DIN 11631
- +20 to +30 °C (+68 to +86 °F)
- 2 to 4 bar (29 to 58 psi)
- Calibration system traceable to national standards
- Calibration with the process connection corresponding to the particular standard

To obtain measured errors, use the *Applicator* sizing tool → 140

Maximum measurement error

Base accuracy

o.r. = of reading

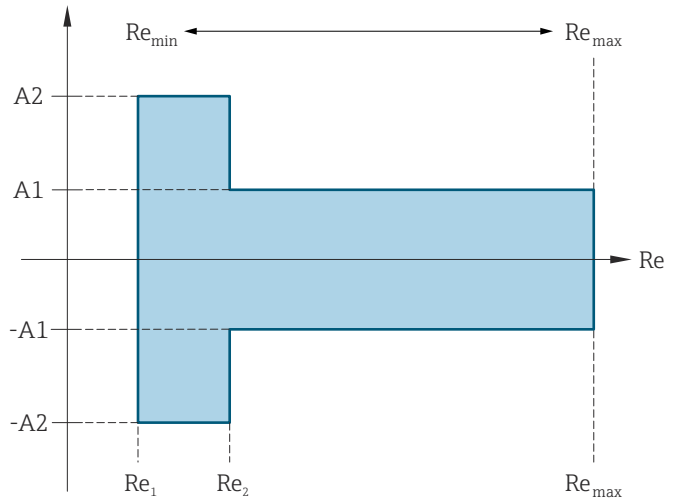

A0034077

Reynolds number	
Re_1	5 000
Re_2	10 000
Re_{min}	Reynolds number for minimum permitted volume flow in measuring tube Standard $Q_{AmpMin}\ [m^3/h] = \frac{v_{AmpMin}\ [m/s] \cdot \pi \cdot (D_i\ [m])^2}{4} \cdot 3600\ [s/h]$ $Q_{AmpMin}\ [ft^3/min] = \frac{v_{AmpMin}\ [ft/s] \cdot \pi \cdot (D_i\ [ft])^2}{4} \cdot 60\ [s/min]$ A0034304
Re_{max}	Defined by internal diameter of measuring tube, Mach number and maximum permitted velocity in measuring tube $Re_{max} = \frac{\rho \cdot 4 \cdot Q_{max_eff}}{\mu \cdot \pi \cdot K}$ A0034339 Further information on effective upper range value Q_{max_eff} → 147

Volume flow

Medium type		Incompressible	Compressible
Reynolds number Range	**Measurement error**	**Standard**	**Standard**
Re_2 to Re_{max}	A1	< 0.75 %	< 1.0 %
Re_1 to Re_2	A2	< 5.0 %	< 5.0 %

Temperature

- Saturated steam and liquids at room temperature, if T > 100 °C (212 °F): < 1 °C (1.8 °F)
- Gas: < 1 % o.r. [K]
- Rise time 50 % (stirred under water, following IEC 60751): 8 s

Mass flow saturated steam

Sensor version				Mass (integrated temperature measurement)	Mass (integrated pressure/ temperature measurement)
Process pressure [bar abs.]	**Flow velocity [m/s (ft/s)]**	**Reynolds number Range**	**Measurement error**	**Standard**	**Standard**
> 4.76	20 to 50 (66 to 164)	Re_2 to Re_{max}	A1	< 1.7 %	< 1.5 %
> 3.62	10 to 70 (33 to 230)	Re_2 to Re_{max}	A1	< 2.0 %	< 1.8 %
In all cases not specified here, the following applies: < 5.7 %					

Mass flow of superheated steam/gases [4) 5)]

Sensor version				Mass (integrated pressure/ temperature measurement)	Mass (integrated temperature measurement) + external pressure compensation [1)]
Process pressure [bar abs.]	**Flow velocity [m/s (ft/s)]**	**Reynolds number Range**	**Measurement error**	**Standard**	**Standard**
< 40	All velocities	Re_2 to Re_{max}	A1	< 1.5 %	< 1.7 %
< 120		Re_2 to Re_{max}	A1	< 2.4 %	< 2.6 %
In all cases not specified here, the following applies: < 6.6 %					

1) The use of a Cerabar S is required for the measurement errors listed in the following section. The measurement error used to calculate the error in the measured pressure is 0.15 %.

Water mass flow

Sensor version				Mass (integrated temperature measurement)
Process pressure [bar abs.]	**Flow velocity [m/s (ft/s)]**	**Reynolds number range**	**Measured value deviation**	**Standard**
All pressures	All velocities	Re_2 to Re_{max}	A1	< 0.85 %
		Re_1 to Re_2	A2	< 2.7 %

4) Single gas, gas mixture, air: NEL40; natural gas: ISO 12213-2 contains AGA8-DC92, AGA NX-19, ISO 12213-3 contains SGERG-88 and AGA8 Gross Method 1
5) The measuring instrument is calibrated with water and has been verified under pressure on gas calibration rigs.

Mass flow (user-specific liquids)

To specify the system accuracy, Endress+Hauser requires information about the type of liquid and its operating temperature or information in table form about the dependency between the liquid density and the temperature.

Example

- Acetone is to be measured at fluid temperatures from +70 to +90 °C (+158 to +194 °F).
- For this purpose, the **Reference temperature** parameter (7703) (here 80 °C (176 °F)), **Reference density** parameter (7700) (here 720.00 kg/m^3) and **Linear expansion coefficient** parameter (7621) (here 18.0298 × 10^{-4} 1/°C) must be entered in the transmitter.
- The overall system uncertainty, which is less than 0.9 % for the example above, is comprised of the following measurement uncertainties: uncertainty of volume flow measurement, uncertainty of temperature measurement, uncertainty of the density-temperature correlation used (including the resulting uncertainty of density).

Mass flow (other media)

Depends on the selected fluid and the pressure value, which is specified in the parameters. Individual error analysis must be performed.

Accuracy of outputs

The outputs have the following base accuracy specifications.

Repeatability

o.r. = of reading

$$r = \left\{ \frac{100 \cdot D_i^3}{V} \right\}^{1/2} \% \text{ o.r.}$$

A0042121-EN

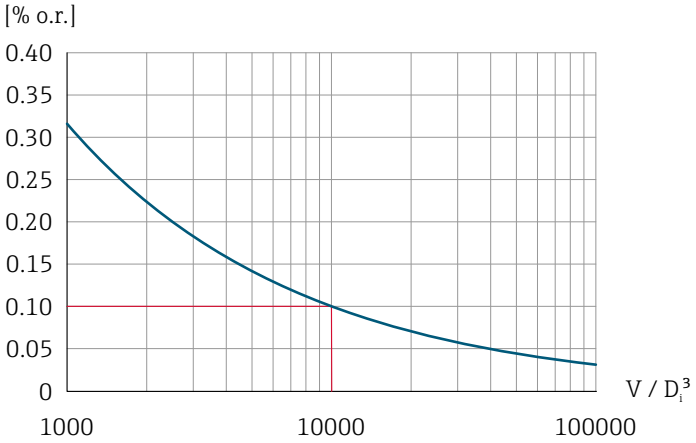

A0042123-EN

22 *Repeatability = 0.1 % o.r. with a measured volume [m^3] of V = 10 000 · D_i^3*

The repeatability can be improved if the measured volume is increased. Repeatability is not a device characteristic but a statistical variable that is dependent on the boundary conditions indicated.

Response time

If all the configurable functions for filter times (flow damping, display damping, current output time constant, frequency output time constant, status output time constant) are set to 0, in the event of vortex frequencies of 10 Hz and higher a response time of max(T_v, 100 ms) can be expected.

In the event of measuring frequencies < 10 Hz, the response time is > 100 ms and can be up to 10 s. T_v is the average vortex period duration of the flowing fluid.

Relative humidity

The device is suitable for use in outdoor and indoor areas with a relative humidity of 5 to 95%.

Operating height

According to EN 61010-1
- ≤ 2 000 m (6 562 ft)
- > 2 000 m (6 562 ft) with additional overvoltage protection (e.g. Endress+Hauser HAW Series)

Influence of ambient temperature

16.7 Installation

Installation requirements

→ 📄 19

16.8 Environment

Ambient temperature range

→ 📄 22

Temperature tables

Observe the interdependencies between the permitted ambient and fluid temperatures when operating the device in hazardous areas.

For detailed information on the temperature tables, see the separate document entitled "Safety Instructions" (XA) for the device.

Storage temperature

All components apart from the display modules:
−50 to +90 °C (−58 to +194 °F)

Display modules

−40 to +80 °C (−40 to +176 °F)

Remote display FHX50:
−40 to +80 °C (−40 to +176 °F)

Relative humidity

The device is suitable for use in outdoor and indoor areas with a relative humidity of 5 to 95%.

Climate class

DIN EN 60068-2-38 (test Z/AD)

Degree of protection

Transmitter
- Standard: IP66/67, type 4X enclosure, suitable for pollution degree 4
- When the housing is open: IP20, type 1 enclosure, suitable for pollution degree 2
- Display module: IP20, type 1 enclosure, suitable for pollution degree 2

Sensor
IP66/67, Type 4X [6] enclosure, suitable for pollution degree 4

Vibration-resistance and shock resistance

Vibration sinusoidal, in accordance with IEC 60068-2-6

Order code for "Housing", option B "GT18 dual compartment, 316L, compact" and order code for "Sensor version; DSC sensor; Meas. tube", option DC "Mass steam; 316L; 316L (integrated pressure/temperature measurement)" or option DD "Mass gas/liquid; 316L; 316L (integrated pressure/temp. measurement)"
- 2 to 8.4 Hz, 3.5 mm peak
- 8.4 to 500 Hz, 1 g peak

Order code for "Housing", option C "GT20 dual compartment, alu, coated, compact" or option J "GT20 dual compartment, alu, coated, remote" or option K "GT18 dual compartment, 316L, remote"
- 2 to 8.4 Hz, 7.5 mm peak
- 8.4 to 500 Hz, 2 g peak

Vibration broad-band random, according to IEC 60068-2-64

Order code for "Housing", option B "GT18 dual compartment, 316L, compact" and order code for "Sensor version; DSC sensor; Meas. tube", option DC "Mass steam; 316L; 316L (integrated pressure/temperature measurement)" or option DD "Mass gas/liquid; 316L; 316L (integrated pressure/temp. measurement)"
- 10 to 200 Hz, 0.003 g^2/Hz
- 200 to 500 Hz, 0.001 g^2/Hz
- Total: 0.93 g rms

Order code for "Housing", option C "GT20 dual compartment, alu, coated, compact" or option J "GT20 dual compartment, alu, coated, remote" or option K "GT18 dual compartment, 316L, remote")
- 10 to 200 Hz, 0.01 g^2/Hz
- 200 to 500 Hz, 0.003 g^2/Hz
- Total: 1.67 g rms

Half-sine shocks according to IEC 60068-2-27

- Order code for "Housing", option B "GT18 dual compartment, 316L, compact" and order code for "Sensor version; DSC sensor; Meas. tube", option DC "Mass steam; 316L; 316L (integrated pressure/temperature measurement)" or option DD "Mass gas/liquid; 316L; 316L (integrated pressure/temp. measurement)"
  6 ms 30 g
- Order code for "Housing", option C "GT20 dual compartment, alu, coated, compact" or option J "GT20 dual compartment, alu, coated, remote" or option K "GT18 dual compartment, 316L, remote")
  6 ms 50 g

Rough handling shocks according to IEC 60068-2-31

Electromagnetic compatibility (EMC)

Details are provided in the Declaration of Conformity.

This unit is not intended for use in residential environments and cannot guarantee adequate protection of the radio reception in such environments.

6) Type 4X is not used when a pressure measuring cell is installed.

16.9 Process

Medium temperature range

DSC sensor [1)]

Order code for "Sensor version; DSC sensor; measuring tube"		
Option	**Description**	**Medium temperature range**
BD	Volume high-temperature; Alloy 718; 316L	−200 to +400 °C (−328 to +752 °F), PN 63 to 160/ Class 600
CD	Mass; Alloy 718; 316L	−200 to +400 °C (−328 to +752 °F)
Special version for very high fluid temperatures (on request)		−200 to +440 °C (−328 to +824 °F), version for hazardous areas

1) Capacitance sensor

Seals

Order code for "DSC sensor seal"		
Option	**Description**	**Medium temperature range**
A	Graphite	−200 to +400 °C (−328 to +752 °F)
B	Viton	−15 to +175 °C (+5 to +347 °F)
C	Gylon	−200 to +260 °C (−328 to +500 °F)
D	Kalrez	−20 to +275 °C (−4 to +527 °F)

Pressure-temperature ratings

For an overview of the pressure-temperature ratings for the process connections, see the Technical Information

Nominal pressure of sensor

The following overpressure resistance values apply to the sensor shaft in the event of a membrane rupture:

Sensor version; DSC sensor; measuring tube	Overpressure, sensor shaft in [bar a]
Volume high-temperature	375
Mass (integrated temperature measurement)	375
Mass steam (integrated pressure/temperature measurement) Mass gas/liquid (integrated pressure/temperature measurement)	375

Pressure specifications

Order code for "Sensor version; DSC sensor; measuring tube", option DA "Mass steam" and DB "Mass gas/liquid" is available for nominal diameters from DN 25/1. Oil-free or grease-free cleaning is not possible.

The OPL (over pressure limit = sensor overload limit) for the measuring instrument depends on the lowest-rated element, with regard to pressure, of the selected components, i.e. the process connection has to be taken into consideration in addition to the measuring cell. Also observe pressure-temperature dependency. For the appropriate standards and further information . The OPL may only be applied for a limited period of time.

The MWP (maximum working pressure) for the sensors depends on the lowest-rated element, with regard to pressure, of the selected components, i.e. the process connection has to be taken into consideration in addition to the measuring cell. Also observe pressure-temperature dependency. For the appropriate standards and further information . The MWP may be applied at the device for an unlimited period. The MWP can also be found on the nameplate.

WARNING

The maximum pressure for the measuring instrument depends on the lowest-rated element with regard to pressure.

- Note specifications regarding pressure range .
- The Pressure Equipment Directive (2014/68/EU) uses the abbreviation "PS". The abbreviation "PS" corresponds to the MWP of the device.
- MWP: The MWP is indicated on the nameplate. This value refers to a reference temperature of +20 °C (+68°F) and may be applied to the device for an unlimited time. Note temperature dependence of MWP.
- OPL: The test pressure corresponds to the over pressure limit of the sensor and may be applied only temporarily to ensure that the measurement is within the specifications and no permanent damage occurs. In the case of sensor range and process connection combinations where the OPL of the process connection is less than the nominal value of the sensor, the device is set at the factory, at the very maximum, to the OPL value of the process connection. If using the entire sensor range, select a process connection with a higher OPL value.

Sensor	Maximum sensor measuring range		MWP	OPL
	Lower (LRL)	Upper (URL)		
	[bar (psi)]	[bar (psi)]	[bar (psi)]	[bar (psi)]
40 bar (600 psi)	0 (0)	+40 (+600)	100 (1 500)	160 (2 400)
100 bar (1 500 psi)	0 (0)	+100 (+1 500)	100 (1 500)	160 (2 400)
160 bar (2 300 psi)	0 (0)	+160 (+2 300)	400 (6 000)	600 (9 000)

Pressure loss

For a precise calculation, use the Applicator → 📄 140.

Vibrations

16.10 Mechanical construction

Design, dimensions

For the dimensions and installed lengths of the device, see the "Technical Information" document, "Mechanical construction" section

Weight

Compact version

Weight data:

- Including the transmitter:
  - Order code for "Housing", option C "GT20, two-chamber, aluminum, coated, compact" 1.8 kg (4.0 lb):
  - Order code for "Housing", option B "GT18 two-chamber, 316L, compact"4.5 kg (9.9 lb):
- Excluding packaging material

Weight in SI units

All values (weight) refer to devices with EN (DIN), PN 250 flanges. Weight information in [kg].

DN [mm]	Weight [kg]	
	Order code for "Housing", option C "GT20 two-chamber, aluminum, coated, compact"	Order code for "Housing", option B "GT18 two-chamber, 316L, compact"
15	15.1	17.8
25	16.1	18.8

DN [mm]	Weight [kg]	
	Order code for "Housing", option C "GT20 two-chamber, aluminum, coated, compact"	Order code for "Housing", option B "GT18 two-chamber, 316L, compact"
40	21.1	23.8
50	23.1	2..8
80	41.1	43.8
100	64.1	66.8
150	152.1	154.8

Weight in US units

All values (weight) refer to devices with ASME B16.5, Class 1500/Sch. 80 flanges. Weight information in [lbs].

DN [in]	Weight [lbs]	
	Order code for "Housing", option C "GT20 two-chamber, aluminum, coated, compact"	Order code for "Housing", option B "GT18 two-chamber, 316L, compact"
½	29.0	34.9
1	37.8	43.7
1½	44.4	50.3
2	66.5	72.4
3	108.3	114.3
4	156.8	162.8
6	381.7	387.7

Transmitter remote version

Wall-mount housing

Dependent on the material of wall-mount housing:
- Order code for "Housing" option J "GT20 two-chamber, aluminum, coated, remote"2.4 kg (5.2 lb):
- Order code for "Housing", option K "GT18 two-chamber, 316L, remote"6.0 kg (13.2 lb):

Sensor remote version

Weight data:
- Including sensor connection housing:
  - Order code for "Housing" option J "GT20 two-chamber, aluminum, coated, remote"0.8 kg (1.8 lb):
  - Order code for "Housing", option K "GT18 two-chamber, 316L, remote"2.0 kg (4.4 lb):
- Excluding the connecting cable
- Excluding packaging material

Weight in SI units

All values (weight) refer to devices with EN (DIN), PN 250 flanges. Weight information in [kg].

DN [mm]	Weight [kg]	
	sensor connection housing Order code for "Housing", option J "GT20 two-chamber, aluminum, coated, remote"	sensor connection housing Order code for "Housing", option K "GT18 two-chamber, 316L, remote"
15	14.1	15.3
25	15.1	16.3
40	20.1	21.3
50	22.1	23.3
80	40.1	41.3
100	63.1	64.3
150	151.1	152.3

Weight in US units

All values (weight) refer to devices with ASME B16.5, Class 1500/Sch. 80 flanges. Weight information in [lbs].

DN [in]	Weight [lbs]	
	sensor connection housing Order code for "Housing", option J "GT20 two-chamber, aluminum, coated, remote"	sensor connection housing Order code for "Housing", option K "GT18 two-chamber, 316L, remote"
½	26.6	29.4
1	35.4	38.2
1½	42.0	44.8
2	64.1	66.8
3	105.9	108.7
4	154.5	157.2
6	379.3	382.1

Accessories

Flow conditioner

Weight in SI units

DN [1] [mm]	Pressure rating	Weight [kg]
15	PN 63	0.05
25	PN 63	0.2
40	PN 63	0.4
50	PN 63	0.6
80	PN 63	1.4
100	PN 63	2.4
150	PN 63	7.8

1) EN (DIN)

DN [1] [mm]	Pressure rating	Weight [kg]
15	40K	0.06
25	40K	0.1
40	40K	0.3
50	40K	0.5
80	40K	1.3
100	40K	2.1
150	40K	6.2

1) JIS

Materials

Transmitter housing

Compact version

- Order code for "Housing", option B "GT18 two-chamber, 316L, compact": Stainless steel, CF3M
- Order code for "Housing", option C "GT20, two-chamber, aluminum, coated, compact": Aluminum, AlSi10Mg, coated
- Window material: glass

Remote version

- Order code for "Housing" option J "GT20 two-chamber, aluminum, coated, remote": Aluminum, AlSi10Mg, coated
- Order code for "Housing", option K "GT18 two-chamber, 316L, remote": For maximum corrosion resistance: Stainless steel, CF3M
- Window material: glass

Cable entries/cable glands

Order code for "Housing", option B "GT18 dual compartment, 316L, compact" option K "GT18 dual compartment, 316L, remote"

Cable entry/cable gland	Type of protection	Material
Cable gland M20 × 1.5	▪ Non-hazardous area ▪ Ex ia ▪ Ex ic ▪ Ex nA, Ex ec ▪ Ex tb	Stainless steel ,1.4404
Adapter for cable entry with internal thread G ½"	Non-hazardous area and hazardous area (except for XP)	Stainless steel, 1.4404 (316L)
Adapter for cable entry with internal thread NPT ½"	Non-hazardous area and hazardous area	

Order code for "Housing": option C "GT20 dual compartment, aluminum, coated, compact", option J "GT20 dual compartment, aluminum, coated remote"

Cable entry/cable gland	Type of protection	Material
Cable gland M20 × 1.5	▪ Non-hazardous area ▪ Ex ia ▪ Ex ic	Plastic
	Adapter for cable entry with internal thread G ½"	Nickel-plated brass

Cable entry/cable gland	Type of protection	Material
Adapter for cable entry with internal thread NPT ½"	Non-hazardous area and hazardous area (except for XP)	Nickel-plated brass
Thread NPT ½" via adapter	Non-hazardous area and hazardous area	

Connecting cable for remote version

- Standard cable: PVC cable with copper shield
- Reinforced cable: PVC cable with copper shield and additional steel wire braided jacket

Sensor connection housing

The material of the sensor connection housing is dependent on the material selected for the transmitter housing.

- Order code for "Housing" option J "GT20 two-chamber, aluminum, coated, remote": Coated aluminum AlSi10Mg
- Order code for "Housing", option K "GT18 two-chamber, 316L, remote": Stainless cast steel, 1.4408 (CF3M)
  Compliant with:
  - NACE MR0175
  - NACE MR0103

Measuring tubes

DN 15 to 300 (½ to 12"), pressure ratings PN160/250, Class 900/1500

- Stainless cast steel, CF3M/1.4408
- Compliant with:
  - NACE MR0175-2003
  - NACE MR0103-2003
- DN15 to 150 (½ to 6"): AD2000, permitted temperature range −10 to +400 °C (+14 to +752 °F) restricted

DSC sensor

Order code for "Sensor version; DSC sensor; measuring tube", option **BD, CD**

Pressure ratings PN 160/250, Class 900/1500:
Parts in contact with medium (marked as "wet" on the DSC sensor flange):

- UNS N07718 similar to Alloy 718/2.4668
- Compliant with:
  - NACE MR01752003
  - NACE MR01032003

Parts not in contact with medium:
Stainless steel 1.4301 (304)

Process connections

Pressure ratings PN 160/250, Class 900/1500:

Stainless steel, triple-certified material, 1.4404/F316/F316L

Available process connections

Seals

- Graphite
  Sigraflex foil Z™ (BAM-certified for oxygen applications)
- FPM (Viton™)
- Kalrez 6375™
- Gylon 3504™ (BAM-certified for oxygen applications)

Housing support

Stainless steel, 1.4408 (CF3M)

Screws for DSC sensor

- Order code for "Sensor version", option BD, CD, DC, DD
  Stainless steel, A2 as per ISO 3506-1 (304)
- On request
  Stainless steel, 1.4980 according to EN 10269 (Gr. 660 B)

Accessories

Protective cover

Stainless steel, 1.4404 (316L)

Flow conditioner

- Stainless steel: 1.4404 (316/316L)
- Compliant with:
  - NACE MR0175-2003
  - NACE MR0103-2003

Process connections

Pressure ratings PN 160/250, Class 900/1500:

Stainless steel, triple-certified material, 1.4404/F316/F316L

Available process connections

16.11 Operability

Languages

Can be operated in the following languages:
- Via local display:
  English, German, French, Spanish, Italian, Dutch, Portuguese, Polish, Russian, Swedish, Turkish, Chinese, Japanese, Korean, Bahasa (Indonesian), Vietnamese, Czech
- Via "FieldCare" operating tool:
  English, German, French, Spanish, Italian, Chinese, Japanese

Onsite operation

Via display module

Two display modules are available:

Order code for "Display; Operation", option C "SD02"	Order code for "Display; Operation", option E "SD03"
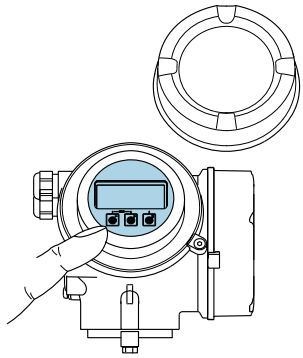	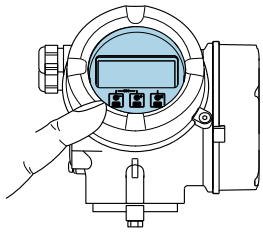
1 *Operation with pushbuttons*	1 *Operation with touch control*

Display elements

- 4-line, illuminated, graphic display
- White background lighting; switches to red in event of device errors
- Format for displaying measured variables and status variables can be individually configured

Operating elements

- Operation with 3 push buttons with open housing: ⊞, ⊟, Ⓔ
  or
- External operation via touch control (3 optical keys) without opening the housing: ⊞, ⊟, Ⓔ
- Operating elements also accessible in the various zones of the hazardous area

Additional functionality

- Data backup function
  The device configuration can be saved in the display module.
- Data comparison function
  The device configuration saved in the display module can be compared to the current device configuration.
- Data transfer function
  The transmitter configuration can be transmitted to another device using the display module.

Via remote display FHX50

The remote display FHX50 can be ordered as an optional extra→ 📄 139.

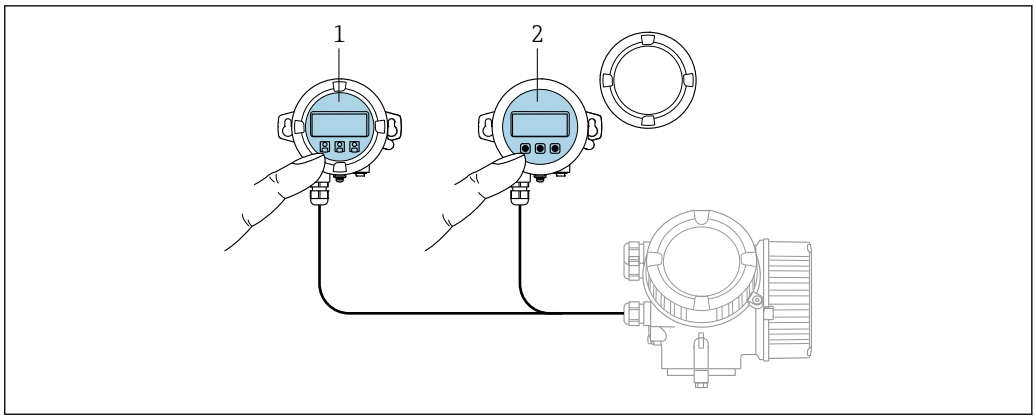

23 FHX50 operating options

1 SD02 display and operating module, push buttons: cover must be opened for operation
2 SD03 display and operating module, optical buttons: operation possible through cover glass

Display and operating elements

The display and operating elements correspond to those of the display module .

Remote operation

→ 58

Service interface

16.12 Certificates and approvals

Current certificates and approvals for the product are available at www.endress.com on the relevant product page:

1. Select the product using the filters and search field.
2. Open the product page.
3. Select **Downloads**.

CE mark

The device meets the legal requirements of the applicable EU Directives. These are listed in the corresponding EU Declaration of Conformity along with the standards applied.

Endress+Hauser confirms successful testing of the device by affixing to it the CE mark.

UKCA marking

The device meets the legal requirements of the applicable UK regulations (Statutory Instruments). These are listed in the UKCA Declaration of Conformity along with the designated standards. By selecting the order option for UKCA marking, Endress+Hauser confirms a successful evaluation and testing of the device by affixing the UKCA mark.

Contact address Endress+Hauser UK:
Endress+Hauser Ltd.
Floats Road
Manchester M23 9NF
United Kingdom
www.uk.endress.com

RCM marking

The measuring system meets the EMC requirements of the "Australian Communications and Media Authority (ACMA)".

Ex-approval	The devices are certified for use in hazardous areas and the relevant safety instructions are provided in the separate "Safety Instructions" (XA) document. Reference is made to this document on the nameplate.
Pressure Equipment Directive	▪ With the marking a) PED/G1/x (x = category) or b) PESR/G1/x (x = category) on the sensor nameplate, Endress+Hauser confirms compliance with the "Essential Safety Requirements" a) specified in Annex I of the Pressure Equipment Directive 2014/68/EU or b) Schedule 2 of Statutory Instruments 2016 No. 1105. ▪ Devices not bearing this marking (without PED or PESR) are designed and manufactured according to sound engineering practice. They meet the requirements of a) Art. 4, Section 3 of the Pressure Equipment Directive 2014/68/EU or b) Part 1, Section 8 of Statutory Instruments 2016 No. 1105. The scope of application is indicated a) in diagrams 6 to 9 in Annex II of the Pressure Equipment Directive 2014/68/EU or b) in Schedule 3, Section 2 of Statutory Instruments 2016 No. 1105.
Experience	The Prowirl 200 measuring system is the successor model of the Prowirl 72 and Prowirl 73.
Other standards and guidelines	▪ EN 60529 Degrees of protection provided by enclosure (IP code) ▪ DIN ISO 13359 Measurement of conductive liquid flow in closed conduits - Flanged-type electromagnetic flowmeters - Overall length ▪ ISO 12764 Measurement of fluid flow in closed conduits — Flow rate measurement by means of vortex shedding flowmeters inserted in circular cross-section conduits running full ▪ EN 61010-1 Safety requirements for electrical equipment for measurement, control and laboratory use - general requirements ▪ GB30439.5 Safety requirements for industrial automation products - Part 5: Flowmeter safety requirements ▪ EN 61326-1/-2-3 EMC requirements for electrical equipment for measurement, control and laboratory use ▪ NAMUR NE 21 Electromagnetic compatibility (EMC) of industrial process and laboratory control equipment ▪ NAMUR NE 32 Data retention in the event of a power failure in field and control instruments with microprocessors ▪ NAMUR NE 43 Standardization of the signal level for the breakdown information of digital transmitters with analog output signal. ▪ NAMUR NE 53 Software of field devices and signal-processing devices with digital electronics ▪ NAMUR NE 105 Specifications for integrating fieldbus devices in engineering tools for field devices ▪ NAMUR NE 107 Self-monitoring and diagnostics of field devices

- NAMUR NE 131
  Requirements for field devices for standard applications
- ETSI EN 300 328
  Guidelines for 2.4 GHz radio components.
- EN 301489
  Electromagnetic compatibility and radio spectrum matters (ERM).

16.13 Application packages

Many different application packages are available to enhance the functionality of the device. Such packages might be needed to address safety aspects or specific application requirements.

The application packages can be ordered with the device or subsequently from Endress+Hauser. Detailed information on the order code in question is available from your local Endress+Hauser sales center or on the product page of the Endress+Hauser website: www.endress.com.

Detailed information on the application packages:
Special Documentation → 168

16.14 Accessories

Overview of accessories available to order → 139

16.15 Documentation

For an overview of the scope of the associated Technical Documentation, refer to the following:
- *Device Viewer* (www.endress.com/deviceviewer): Enter the serial number from the nameplate
- *Endress+Hauser Operations app*: Enter serial number from nameplate or scan matrix code on nameplate.

Standard Documentation

Brief Operating Instructions

Brief Operating Instructions for the sensor

Measuring device	Documentation code
Prowirl O 200	KA01324D

Brief Operating Instructions for the transmitter

Measuring instrument	Documentation code
Prowirl 200	KA01738D

Technical Information

Measuring device	Documentation code
Prowirl O 200	TI01334D

Description of Device Parameters

Measuring instrument	Documentation code
Prowirl 200	GP01240D

Supplementary device-dependent documentation

Safety instructions

Contents	Documentation code
ATEX/IECEx Ex d	XA01635D
ATEX/IECEx Ex ia	XA01636D
ATEX/IECEx Ex ec, Ex ic	XA01637D
$_{C}CSA_{US}$ XP	XA01638D
$_{C}CSA_{US}$ IS	XA01639D
EAC Ex d	XA01684D
EAC Ex ia	XA01782D
EAC Ex ec, Ex ic	XA01685D
INMETRO Ex d	XA01642D
INMETRO Ex ia	XA01640D
INMETRO Ex ec, Ex ic	XA01641D
JPN Ex d	XA01766D
NEPSI Ex d	XA01643D
NEPSI Ex ia	XA01644D
NEPSI Ex ec, Ex ic	XA01645D
UKEX Ex d	XA02630D
UKEX Ex ia	XA02631D
UKEX Ex ec, Ex ic	XA02632D

Special Documentation

Contents	Documentation code
Information on the Pressure Equipment Directive	SD01614D
Protective cover	SD00333F
Modbus TCP system integration	SD03409D

Installation Instructions

Contents	Note
Installation instructions for spare part sets and accessories	▪ Access the overview of all the available spare part sets via *Device Viewer* → 🗎 136 ▪ Accessories available for order with Installation Instructions → 🗎 139

Index

A

Access authorization to parameters
- Read access . . . 55
- Write access . . . 55

Access code . . . 55
- Incorrect input . . . 55

Adapting the diagnostic behavior . . . 126
Ambient conditions
- Ambient temperature . . . 22
- Operating height . . . 155
- Storage temperature . . . 155
- Vibration resistance and shock resistance . . . 156

Ambient temperature
- Influence . . . 155

Ambient temperature range . . . 22
Application . . . 141
Applicator . . . 142
Approvals . . . 165

C

Cable entries
- Technical data . . . 151

Cable entry
- Degree of protection . . . 40

CE mark . . . 10, 165
Certificates . . . 165
Check
- Received goods . . . 13

Checklist
- Post-connection check . . . 41
- Post-mounting check . . . 28

Cleaning
- Replacing housing seals . . . 134
- Replacing seals . . . 134
- Replacing sensor seals . . . 134

Climate class . . . 155
Commissioning . . . 61
- Advanced settings . . . 76
- Configuring the device . . . 61

Connecting the device . . . 33
Connection
- see Electrical connection

Connection cable . . . 30
Connection preparations . . . 33
Connection tools . . . 30
Context menu
- Calling up . . . 51
- Closing . . . 51
- Explanation . . . 51

Current consumption . . . 151

D

Date of manufacture . . . 14
Declaration of Conformity . . . 10
Defining the access code . . . 102
Degree of protection . . . 40, 155
Design
- Measuring device . . . 12

Device
- Configuring . . . 61

Device components . . . 12
Device description files . . . 60
Device locking, status . . . 112
Device name
- Sensor . . . 14

Device repair . . . 136
Device revision . . . 60
Device type ID . . . 60
Device Viewer . . . 136
DeviceCare
- Device description file . . . 60

Diagnostic behavior
- Explanation . . . 123
- Symbols . . . 123

Diagnostic information
- Design, description . . . 123, 126
- DeviceCare . . . 125
- FieldCare . . . 125
- LED . . . 121
- Local display . . . 122
- Overview . . . 127
- Remedial measures . . . 127
- Web browser . . . 124

Diagnostic list . . . 128
Diagnostic message . . . 122
Diagnostics
- Symbols . . . 122

DIP switch
- see Write protection switch

Direct access . . . 52
Disabling write protection . . . 102
Display
- Current diagnostic event . . . 127
- Previous diagnostic event . . . 127
- see Local display

Display area
- For operational display . . . 45
- In the navigation view . . . 47

Display values
- For locking status . . . 112

Displaying the measured value history . . . 117
Disposal . . . 137
Document
- Function . . . 6
- Symbols . . . 6

Document function . . . 6
Documentation . . . 167

E

Electrical connection
- Computer with web browser . . . 58
- Degree of protection . . . 40

Measuring instrument 30
Operating tool (e.g. FieldCare, DeviceCare, AMS Device Manager, SIMATIC PDM) 58
Operating tools
Via Modbus TCP over Ethernet-APL protocol . . 58
Electromagnetic compatibility 156
Enabling write protection 102
Enabling/disabling the keypad lock 56
Endress+Hauser services
Maintenance 135
Repair 137
Error messages
see Diagnostic messages
Event list 128
Event logbook 128
Ex-approval 166
Experience 166
Extended order code
Sensor 14

F

Field of application
Residual risks 10
FieldCare
Device description file 60
Filtering the event logbook 129
Firmware
Release date 60
Version 60
Firmware history 133
Flow direction 19
Functions
see Parameter

G

Galvanic isolation 149

H

Hardware write protection 103
Help text
Calling up 53
Closing 53
Explanation 53

I

I/O electronics module 12, 33
Identifying the measuring instrument 13
Incoming acceptance 13
Influence
Ambient temperature 155
Information about this document 6
Inlet runs 20
Input 141
Input screen 49
Inspection
Connection 41
Installation 28
Installation 19
Installation dimensions 22
Installation requirements
Inlet and outlet runs 20
Installation dimensions 22
Orientation 19
Thermal insulation 23
Intended use 9

L

Languages, operation options 163
Line recorder 117
Local display
Editing view 48
Navigation view 47
see Diagnostic message
see In alarm condition
see Operational display
Low flow cut off 149

M

Main electronics module 12
Maintenance work 134
Manufacturer ID 60
Materials 161
Maximum measurement error 152
Measured variables
Calculated 142
Measured 141
see Process variables
Measuring and test equipment 135
Measuring device
Conversion 136
Design 12
Disposal 138
Preparing for mounting 26
Removing 137
Repairs 136
Switching on 61
Measuring instrument
Installing the sensor 26
Integrating via communication protocol 60
Preparing for electrical connection 33
Measuring principle 141
Measuring range 142
Measuring system 141
Medium temperature range 157
Menu
Diagnostics 127
Setup 61
Menus
For device configuration 61
For specific settings 76
Mounting dimensions
see Installation dimensions
Mounting location 19
Mounting preparations 26
Mounting requirements
Mounting location 19
Mounting tools 26

N

Nameplate
- Sensor . . . 14

Navigation path (navigation view) . . . 47
Navigation view
- In the submenu . . . 47
- In the wizard . . . 47

Netilion . . . 135
Nominal pressure
- Sensor . . . 157

Numeric editor . . . 48

O

Onsite display . . . 164
Operable flow range . . . 147
Operating elements . . . 50, 123
Operating height . . . 155
Operating keys
- see Operating elements

Operating menu
- Menus, submenus . . . 43
- Structure . . . 43
- Submenus and user roles . . . 44

Operating philosophy . . . 44
Operation . . . 112
Operation options . . . 42
Operational display . . . 45
Operational safety . . . 10
Order code . . . 13, 14
Orientation (vertical, horizontal) . . . 19
Outlet runs . . . 20
Output signal . . . 148
Output variables . . . 148

P

Packaging disposal . . . 18
Parameter settings
- Administration (Submenu) . . . 100
- Advanced setup (Submenu) . . . 76
- APL port (Submenu) . . . 63
- Communication (Submenu) . . . 62
- Data logging (Submenu) . . . 117
- Define access code (Wizard) . . . 100
- Device information (Submenu) . . . 131
- Diagnostics (Menu) . . . 127
- Display (Submenu) . . . 96
- Display (Wizard) . . . 72
- External compensation (Submenu) . . . 91
- Gas composition (Submenu) . . . 80
- Heartbeat base settings (Submenu) . . . 99
- Low flow cutoff (Wizard) . . . 74
- Medium properties (Submenu) . . . 77
- Medium selection (Wizard) . . . 69
- Network diagnostics (Submenu) . . . 64
- Process variables (Submenu) . . . 112
- Reset access code (Submenu) . . . 100
- Sensor adjustment (Submenu) . . . 92
- Setup (Menu) . . . 61
- Simulation (Submenu) . . . 101
- System units (Submenu) . . . 65
- Totalizer (Submenu) . . . 115
- Totalizer 1 to n (Submenu) . . . 94
- Totalizer handling (Submenu) . . . 116
- Web server (Submenu) . . . 57

Parameters
- Changing . . . 54
- Entering a value . . . 54

Performance characteristics . . . 152
Post-connection check . . . 61
Post-connection check (checklist) . . . 41
Post-mounting check . . . 61
Post-mounting check (checklist) . . . 28
Potential equalization . . . 39
Power consumption . . . 151
Power supply failure . . . 151
Pressure Equipment Directive . . . 166
Pressure loss . . . 158
Pressure-temperature ratings . . . 157
Process conditions
- Medium temperature . . . 157
- Pressure loss . . . 158

Product safety . . . 10
Protecting parameter settings . . . 102

R

RCM marking . . . 165
Read access . . . 55
Reading off measured values . . . 112
Recalibration . . . 135
Reference operating conditions . . . 152
Registered trademarks . . . 8
Remedial actions
- Calling up . . . 124
- Closing . . . 124

Remote operation . . . 165
Remote version
- Fitting the connecting cable . . . 35

Repair . . . 136
- Notes . . . 136

Repair of a device . . . 136
Repeatability . . . 154
Replacement
- Device components . . . 136

Replacing seals . . . 134
Requirements for personnel . . . 9
Response time . . . 154
Return . . . 137

S

Safety . . . 9
Sensor
- Installing . . . 26

Serial number . . . 14
Setting the operating language . . . 61
Settings
- Adapting the measuring device to the process conditions . . . 116
- Administration . . . 99

Advanced display configurations 96
Communication interface 62
External compensation 91
Gas composition 80
Local display 72
Low flow cut off 74
Medium 69
Medium properties 77
Operating language 61
Resetting the device 131
Resetting the totalizer 116
Sensor adjustment 92
Simulation 101
System units 65
Totalizer 94
Totalizer reset 116
Signal on alarm 149
Software release 60
Spare part 136
Spare parts 136
Standards and guidelines 166
Status area
For operational display 45
In the navigation view 47
Status signals 122, 125
Storage conditions 17
Storage temperature 17
Storage temperature range 155
Structure
Operating menu 43
Submenu
Administration 99, 100
Advanced setup 76
APL port 63
Communication 62
Data logging 117
Device information 131
Display 96
Event list 128
External compensation 91
Gas composition 80
Heartbeat base settings 99
Heartbeat setup 99
Medium properties 77
Network diagnostics 64
Overview 44
Process variables 112
Reset access code 100
Sensor adjustment 92
Simulation 101
System units 65
Totalizer 115
Totalizer 1 to n 94
Totalizer handling 116
Web server 57
Supply unit
Requirements 32
Supply voltage 32, 150
Symbols
For communication 45
For correction 49
For diagnostic behavior 45
For locking 45
For measured variable 45
For measurement channel number 45
For menus 47
For parameters 47
For status signal 45
For submenu 47
For wizards 47
In the status area of the local display 45
In the text and numeric editor 49
System design
Measuring system 141
see Measuring device design
System integration 60

T

Technical data, overview 141
Temperature range
Storage temperature 17
Terminal assignment 33
Terminals 151
Text editor 48
Thermal insulation 23
Tool
Transportation 17
Tool tip
see Help text
Tools
Electrical connection 30
Installation 26
Totalizer
Assign process variable 115
Configuring 94
Transmitter
Connecting the signal cables 33
Turning the display module 28
Turning the housing 27
Transporting the measuring instrument 17
Troubleshooting
General 120
Turning the display module 28
Turning the electronics housing
see Turning the transmitter housing
Turning the transmitter housing 27

U

UKCA marking 165
Use of measuring device
Borderline cases 9
Incorrect use 9
Use of measuring instrument
see Intended use
User roles 44

V

Version data for the device 60
Vibration resistance and shock resistance 156

W

W@M Device Viewer 13
Weight
Compact version 158
SI units 158
US units 159
Flow conditioner 160
Sensor remote version
SI units 160
US units 160
Transport (notes) 17
Wizard
Define access code 100
Display 72
Low flow cutoff 74
Medium selection 69
Workplace safety 10
Write access 55
Write protection
Via access code 102
Via write protection switch 103
Write protection switch 103

71712930

www.addresses.endress.com

Endress+Hauser

People for Process Automation