BA02404D/06/EN/01.25-00
71711803
2025-11-11

Valid as of version
01.00.zz (Device firmware)

Operating Instructions
Proline Promass F 300

Coriolis flowmeter
Modbus TCP

Endress+Hauser
People for Process Automation

- Make sure the document is stored in a safe place such that it is always available when working on or with the device.
- To avoid danger to individuals or the facility, read the "Basic safety instructions" section carefully, as well as all other safety instructions in the document that are specific to working procedures.
- The manufacturer reserves the right to modify technical data without prior notice. Your Endress+Hauser sales organization will supply you with current information and updates to this manual.

Table of contents

1 About this document 6
1.1 Document function 6
1.2 Symbols 6
1.2.1 Safety symbols 6
1.2.2 Electrical symbols 6
1.2.3 Communication-specific symbols 6
1.2.4 Tool symbols 7
1.2.5 Symbols for certain types of information 7
1.2.6 Symbols in graphics 7
1.3 Documentation 8
1.4 Registered trademarks 8

2 Safety instructions 9
2.1 Requirements for the personnel 9
2.2 Intended use 9
2.3 Workplace safety 10
2.4 Operational safety 10
2.5 Product safety 10
2.6 IT security 11
2.7 Device-specific IT security 11
2.7.1 Protecting access via hardware write protection 11
2.7.2 Protecting access via a password 11
2.7.3 Access via web server 12
2.7.4 Access via service interface (port 2): CDI-RJ45 13
2.7.5 Advanced safety requirements 13

3 Product description 14
3.1 Product design 14

4 Incoming acceptance and product identification 15
4.1 Incoming acceptance 15
4.2 Product identification 15
4.2.1 Transmitter nameplate 16
4.2.2 Sensor nameplate 17
4.2.3 Symbols on the device 18

5 Storage and transport 19
5.1 Storage conditions 19
5.2 Transporting the product 19
5.2.1 Measuring devices without lifting lugs 19
5.2.2 Measuring devices with lifting lugs . . 20
5.2.3 Transporting with a fork lift 20
5.3 Packaging disposal 20

6 Installation 21
6.1 Installation requirements 21
6.1.1 Installation position 21
6.1.2 Environmental and process requirements 23
6.1.3 Special installation instructions 25
6.2 Installing the device 28
6.2.1 Required tools 28
6.2.2 Preparing the measuring instrument . 28
6.2.3 Installing the measuring instrument . 28
6.2.4 Turning the transmitter housing 29
6.2.5 Turning the display module 30
6.3 Post-installation check 31

7 Electrical connection 32
7.1 Electrical safety 32
7.2 Connecting requirements 32
7.2.1 Required tools 32
7.2.2 Requirements for connecting cable . . . 32
7.2.3 Terminal assignment 35
7.2.4 Available device plugs for Proline 300 35
7.2.5 Modbus TCP over Ethernet-APL 10 Mbit/s 35
7.2.6 Modbus TCP over Ethernet 100 Mbit/s 36
7.2.7 Shielding and grounding 36
7.2.8 Preparing the measuring instrument . 36
7.3 Connecting the device 37
7.3.1 Connecting the transmitter 37
7.3.2 Connecting the remote display and operating module DKX001 40
7.4 Potential equalization 40
7.4.1 Requirements 40
7.5 Special connection instructions 41
7.5.1 Connection examples 41
7.6 Hardware settings 43
7.6.1 Setting the device address 43
7.6.2 Activating the default IP address 44
7.7 Ensuring the degree of protection 44
7.8 Post-connection check 45

8 Operation options 46
8.1 Overview of operation options 46
8.2 Structure and function of the operating menu 47
8.2.1 Structure of the operating menu 47
8.2.2 Operating philosophy 48
8.3 Access to operating menu via local display . . . 49
8.3.1 Operational display 49
8.3.2 Navigation view 51
8.3.3 Editing view 53
8.3.4 Operating elements 55
8.3.5 Opening the context menu 55

8.3.6 Navigating and selecting from list . . . 57
8.3.7 Calling the parameter directly 57
8.3.8 Calling up help text 58
8.3.9 Changing the parameters 58
8.3.10 User roles and related access authorization 59
8.3.11 Disabling write protection via access code 59
8.3.12 Enabling and disabling the keypad lock 60
8.4 Access to operating menu via web browser . . . 60
8.4.1 Function scope 60
8.4.2 Requirements 61
8.4.3 Connection setup 62
8.4.4 Logging on 64
8.4.5 User interface 65
8.4.6 Disabling the Web server 66
8.4.7 Logging out 66
8.5 Operation via the SmartBlue app 67
8.6 Access to the operating menu via the operating tool 67
8.6.1 Connecting the operating tool 67
8.6.2 FieldCare 71
8.6.3 DeviceCare 72

9 System integration 73

9.1 Overview of device description files 73
9.1.1 Current version data for the device . . . 73
9.1.2 Operating tools 73
9.2 Modbus TCP system integration 73

10 Commissioning 74

10.1 Post-mounting and post-connection check . . . 74
10.2 Switching on the measuring device 74
10.3 Setting the operating language 74
10.4 Configuring the device 74
10.4.1 Displaying the communication interface 76
10.4.2 Setting the system units 79
10.4.3 Selecting and setting the medium . . . 82
10.4.4 Displaying the I/O configuration 84
10.4.5 Configuring the current input 85
10.4.6 Configuring the status input 86
10.4.7 Configuring the current output 87
10.4.8 "Pulse/frequency/switch output 1 to n" wizard 92
10.4.9 Configuring the relay output 99
10.4.10 Configuring the double pulse output 102
10.4.11 Configuring the local display 103
10.4.12 Configuring the low flow cut off 108
10.4.13 Configuring partially filled pipe detection 110
10.5 Advanced settings 111
10.5.1 Using the parameter to enter the access code 111
10.5.2 Calculated process variables 112
10.5.3 Carrying out a sensor adjustment . . . 113
10.5.4 Configuring the totalizer 119
10.5.5 "Custody transfer activation" wizard . 121
10.5.6 "Custody transfer deactivation" wizard 123
10.5.7 Carrying out additional display configurations 125
10.5.8 WLAN configuration 130
10.5.9 Viscosity application package 132
10.5.10 Concentration Measurement application package 133
10.5.11 Petroleum application package 133
10.5.12 Heartbeat Technology application package 133
10.5.13 Configuration management 135
10.5.14 Using parameters for device administration 136
10.6 Simulation 138
10.6.1 Process value simulation 139
10.6.2 Simulation input 140
10.6.3 Output simulation 141
10.6.4 Diagnostic event simulation 143
10.7 Protecting settings from unauthorized access 143
10.7.1 Write protection via access code . . . 143
10.7.2 Write protection via write protection switch 145

11 Operation 146

11.1 Reading the device locking status 146
11.2 Adjusting the operating language 146
11.3 Configuring the display 146
11.4 Reading the measured values 146
11.4.1 "Measured variables" submenu 147
11.4.2 "Input values" submenu 157
11.4.3 Output values 158
11.4.4 Totalizer 161
11.5 Adapting the measuring device to the process conditions 161
11.6 Performing a totalizer reset 161
11.6.1 Function scope of "Control Totalizer" parameter 162
11.6.2 Function range of "Reset all totalizers" parameter 162
11.7 Displaying the measured value history 162
11.8 Gas Fraction Handler 166
11.8.1 "Measurement mode" submenu 166
11.8.2 "Medium index" submenu 168

12 Diagnostics and troubleshooting . . 169

12.1 General troubleshooting 169
12.2 Diagnostic information via LEDs 171
12.2.1 Transmitter 171
12.3 Diagnostic information on local display 172
12.3.1 Diagnostic message 172
12.3.2 Calling up remedial actions 174
12.4 Diagnostic information in the web browser . . 174
12.4.1 Diagnostic options 174
12.4.2 Calling up remedial actions 175

12.5 Diagnostic information in FieldCare or DeviceCare 175
12.5.1 Diagnostic options 175
12.5.2 Calling up remedy information 176
12.6 Diagnostic information via communication interface 176
12.6.1 Reading out diagnostic information 176
12.6.2 Configuring error response mode . . . 177
12.7 Adapting the diagnostic information 177
12.7.1 Adapting the diagnostic behavior . . . 177
12.8 Overview of diagnostic information 177
12.9 Pending diagnostic events 182
12.10 Diagnostic list 183
12.11 Event logbook 184
12.11.1 Reading out the event logbook 184
12.11.2 Filtering the event logbook 185
12.11.3 Overview of information events 185
12.12 Resetting the device 186
12.12.1 Function scope of the "Device reset" parameter 187
12.13 Device information 187
12.14 Firmware history 189

13 Maintenance 190

13.1 Maintenance work 190
13.1.1 Exterior cleaning 190
13.1.2 Internal cleaning 190
13.2 Measuring and test equipment 190
13.3 Endress+Hauser services 190

14 Repair 191

14.1 General notes 191
14.1.1 Repair and conversion concept 191
14.1.2 Notes for repair and conversion 191
14.2 Spare parts 191
14.3 Endress+Hauser services 191
14.4 Return 191
14.5 Disposal 192
14.5.1 Removing the measuring device 192
14.5.2 Disposing of the measuring device . . 192

15 Accessories 193

15.1 Device-specific accessories 193
15.1.1 For the transmitter 193
15.1.2 For the sensor 194
15.2 Service-specific accessories 194
15.3 System components 195

16 Technical data 196

16.1 Application 196
16.2 Function and system design 196
16.3 Input 197
16.4 Output 199
16.5 Power supply 206
16.6 Performance characteristics 207
16.7 Installation 212
16.8 Environment 213
16.9 Process 214
16.10 Mechanical construction 217
16.11 Operability 221
16.12 Certificates and approvals 226
16.13 Application packages 229
16.14 Accessories 231
16.15 Documentation 232

Index 234

1 About this document

1.1 Document function

These Operating Instructions contain all the information required in the various life cycle phases of the device: from product identification, incoming acceptance and storage, to installation, connection, operation and commissioning, through to troubleshooting, maintenance and disposal.

1.2 Symbols

1.2.1 Safety symbols

⚠ DANGER
This symbol alerts you to a dangerous situation. Failure to avoid this situation will result in serious or fatal injury.

⚠ WARNING
This symbol alerts you to a potentially dangerous situation. Failure to avoid this situation can result in serious or fatal injury.

⚠ CAUTION
This symbol alerts you to a potentially dangerous situation. Failure to avoid this situation can result in minor or medium injury.

NOTICE
This symbol alerts you to a potentially harmful situation. Failure to avoid this situation can result in damage to the product or something in its vicinity.

1.2.2 Electrical symbols

Symbol	Meaning
⎓	Direct current
∼	Alternating current
≂	Direct current and alternating current
⏚	**Ground connection** A grounded terminal which, as far as the operator is concerned, is grounded via a grounding system.
⏚	**Protective earth (PE)** Ground terminals that must be connected to ground prior to establishing any other connections. The ground terminals are located on the interior and exterior of the device: ▪ Interior ground terminal: protective earth is connected to the mains supply. ▪ Exterior ground terminal: device is connected to the plant grounding system.

1.2.3 Communication-specific symbols

Symbol	Meaning
📶	**Wireless Local Area Network (WLAN)** Communication via a wireless, local area network
●	**LED** LED is off.

Symbol	Meaning
	LED LED is on.
	LED LED flashing.

1.2.4 Tool symbols

Symbol	Meaning
	Flat-blade screwdriver
	Allen key
	Open-end wrench

1.2.5 Symbols for certain types of information

Symbol	Meaning
	Permitted Procedures, processes or actions that are permitted.
	Preferred Procedures, processes or actions that are preferred.
	Forbidden Procedures, processes or actions that are forbidden.
	Tip Indicates additional information.
	Reference to documentation
	Reference to page
	Reference to graphic
▶	Notice or individual step to be observed
1., 2., 3....	Series of steps
	Result of a step
	Help in the event of a problem
	Visual inspection

1.2.6 Symbols in graphics

Symbol	Meaning
1, 2, 3, ...	Item numbers
1., 2., 3., ...	Series of steps
A, B, C, ...	Views
A-A, B-B, C-C, ...	Sections
EX	Hazardous area

Symbol	Meaning
	Safe area (non-hazardous area)
	Flow direction

1.3 Documentation

For an overview of the scope of the associated Technical Documentation, refer to the following:

- *Device Viewer* (www.endress.com/deviceviewer): Enter the serial number from the nameplate
- *Endress+Hauser Operations app*: Enter serial number from nameplate or scan matrix code on nameplate.

The following document types are available in the Downloads area of the Endress+Hauser website (www.endress.com/downloads), depending on the device version:

Document type	Purpose and content of the document
Technical Information (TI)	**Planning aid for your device** The document contains all the technical data on the device and provides an overview of the accessories and other products that can be ordered for the device.
Brief Operating Instructions (KA)	**Guide that takes you quickly to the 1st measured value** The Brief Operating Instructions contain all the essential information from incoming acceptance to initial commissioning.
Operating Instructions (BA)	**Your reference document** The Operating Instructions contain all the information that is required in various phases of the life cycle of the device: from product identification, incoming acceptance and storage, to mounting, connection, operation and commissioning through to troubleshooting, maintenance and disposal.
Description of Device Parameters (GP)	**Reference for your parameters** The document provides a detailed explanation of each individual parameter. The description is aimed at those who work with the device over the entire life cycle and perform specific configurations.
Safety instructions (XA)	Depending on the approval, safety instructions for electrical equipment in hazardous areas are also supplied with the device. These are an integral part of the Operating Instructions. The nameplate indicates which Safety Instructions (XA) apply to the device.
Supplementary device-dependent documentation (SD/FY)	Always comply strictly with the instructions in the relevant supplementary documentation. The supplementary documentation is a constituent part of the device documentation.

1.4 Registered trademarks

Modbus®
Registered trademark of SCHNEIDER AUTOMATION, INC.

2 Safety instructions

2.1 Requirements for the personnel

The personnel for installation, commissioning, diagnostics and maintenance must fulfill the following requirements:
- Trained, qualified specialists must have a relevant qualification for this specific function and task.
- Are authorized by the plant owner/operator.
- Are familiar with federal/national regulations.
- Before starting work, read and understand the instructions in the manual and supplementary documentation as well as the certificates (depending on the application).
- Follow instructions and comply with basic conditions.

The operating personnel must fulfill the following requirements:
- Are instructed and authorized according to the requirements of the task by the facility's owner-operator.
- Follow the instructions in this manual.

2.2 Intended use

Application and media
The measuring instrument described in this manual is intended only for the flow measurement of liquids and gases.

Depending on the version ordered, the measuring instrument can also be used to measure potentially explosive [1], flammable, toxid and oxidizing media.

Measuring instruments for use in hazardous areas, in hygienic applications, or where there is an increased risk due to pressure, are specially labeled on the nameplate.

To ensure that the measuring instrument is in perfect condition during operation:
- Only use the measuring instrument in full compliance with the data on the nameplate and the general conditions listed in the Operating Instructions and supplementary documentation.
- Using the nameplate, check whether the ordered device is permitted for the intended use in the hazardous area (e.g. explosion protection, pressure vessel safety).
- Use the measuring instrument only for media to which the process-wetted materials are sufficiently resistant.
- Keep within the specified pressure and temperature range.
- Keep within the specified ambient temperature range.
- Protect the measuring instrument permanently against corrosion from environmental influences.

Incorrect use
Non-designated use can compromise safety. The manufacturer is not liable for damage caused by improper or non-designated use.

⚠ WARNING
Danger of breakage due to corrosive or abrasive fluids and ambient conditions!
- Verify the compatibility of the process fluid with the sensor material.
- Ensure the resistance of all fluid-wetted materials in the process.
- Keep within the specified pressure and temperature range.

1) Not applicable for IO-Link measuring instruments

NOTICE

Verification for borderline cases:

- For special fluids and fluids for cleaning, Endress+Hauser is glad to provide assistance in verifying the corrosion resistance of fluid-wetted materials, but does not accept any warranty or liability as minute changes in the temperature, concentration or level of contamination in the process can alter the corrosion resistance properties.

Residual risks

CAUTION

Risk of hot or cold burns! The use of media and electronics with high or low temperatures can produce hot or cold surfaces on the device.

- Mount suitable touch protection.

WARNING

Danger of housing breaking due to measuring tube breakage!

If a measuring tube ruptures, the pressure inside the sensor housing will rise according to the operating process pressure.

- Use a rupture disk.

WARNING

Danger from medium escaping!

For device versions with a rupture disk: medium escaping under pressure can cause injury or material damage.

- Take precautions to prevent injury and material damage if the rupture disk is actuated.

2.3 Workplace safety

For work on and with the device:

- Wear the required personal protective equipment according to federal/national regulations.

2.4 Operational safety

Damage to the device!

- Operate the device in proper technical condition and fail-safe condition only.
- The operator is responsible for the interference-free operation of the device.

Modifications to the device

Unauthorized modifications to the device are not permitted and can lead to unforeseeable dangers!

- If modifications are nevertheless required, consult with the manufacturer.

Repair

To ensure continued operational safety and reliability:

- Carry out repairs on the device only if they are expressly permitted.
- Observe federal/national regulations pertaining to the repair of an electrical device.
- Use only original spare parts and accessories.

2.5 Product safety

This state-of-the-art device is designed and tested in accordance with good engineering practice to meet operational safety standards. It left the factory in a condition in which it is safe to operate.

It meets general safety standards and legal requirements. It also complies with the EU directives listed in the device-specific EU declaration of conformity. The manufacturer confirms this by affixing the CE mark.

2.6 IT security

The manufacturer warranty is valid only if the product is installed and used as described in the Operating Instructions. The product is equipped with security mechanisms to protect it against any inadvertent changes to the settings.

IT security measures, which provide additional protection for the product and associated data transfer, must be implemented by the operators themselves in line with their security standards.

2.7 Device-specific IT security

The device offers a range of specific functions to support protective measures on the operator's side. These functions can be configured by the user and guarantee greater in-operation safety if used correctly. The following list provides an overview of the most important functions:

Function/interface	Factory setting	Recommendation
Write protection via hardware write protection switch → 🗎 11	Not enabled	On an individual basis following risk assessment
Access code (also applies to web server login or FieldCare connection) → 🗎 12	Not enabled (0000)	Assign a customized access code during commissioning
WLAN (order option in display module)	Enabled	On an individual basis following risk assessment
WLAN security mode	Enabled (WPA2-PSK)	Do not change
WLAN passphrase (Password) → 🗎 12	Serial number	Assign an individual WLAN passphrase during commissioning
WLAN mode	Access point	On an individual basis following risk assessment
Web server → 🗎 12	Enabled	On an individual basis following risk assessment
CDI-RJ45 service interface → 🗎 13	Enabled	-

2.7.1 Protecting access via hardware write protection

Write access to the parameters of the device via the local display, Web browser or operating tool (e.g. FieldCare, DeviceCare) can be disabled via a write protection switch (DIP switch on the main electronics module). When hardware write protection is enabled, only read access to the parameters is possible.

Hardware write protection is disabled when the device is delivered → 🗎 145.

2.7.2 Protecting access via a password

Different passwords are available to protect write access to the device parameters or access to the device via the WLAN interface.

- User-specific access code
  Protect write access to the device parameters via the local display, web browser or operating tool (e.g. FieldCare, DeviceCare). Access authorization is clearly regulated through the use of a user-specific access code.
- WLAN passphrase
  The network key protects a connection between an operating unit (e.g. notebook or tablet) and the device via the WLAN interface which can be ordered as an option.
- Infrastructure mode
  When the device is operated in infrastructure mode, the WLAN passphrase corresponds to the WLAN passphrase configured on the operator side.

User-specific access code

Write access to the device parameters via the local display, web browser or operating tool (e.g. FieldCare, DeviceCare) can be protected by the modifiable, user-specific access code (→ 143).

When the device is delivered, the device does not have an access code and is equivalent to *0000* (open).

WLAN passphrase: Operation as WLAN access point

A connection between an operating unit (e.g. notebook or tablet) and the device via the WLAN interface (→ 69), which can be ordered as an optional extra, is protected by the network key. The WLAN authentication of the network key complies with the IEEE 802.11 standard.

When the device is delivered, the network key is pre-defined depending on the device. It can be changed via the **WLAN settings** submenu in the **WLAN passphrase** parameter (→ 132).

Infrastructure mode

A connection between the device and WLAN access point is protected by means of an SSID and passphrase on the system side. Please contact the relevant system administrator for access.

General notes on the use of passwords

- The access code and network key supplied with the device should be changed during commissioning for safety reasons.
- Follow the general rules for generating a secure password when defining and managing the access code and network key.
- The user is responsible for the management and careful handling of the access code and network key.
- For information on configuring the access code or on what to do if you lose the password, for example, see "Write protection via access code" → 143.

2.7.3 Access via web server

The integrated web server can be used to operate and configure the device by means of a web browser via Ethernet-APL , the service interface (CDI-RJ45) or via WLAN interface.

The web server is enabled when the device is delivered. The web server can be disabled if necessary via the **Web server functionality** parameter (e.g., after commissioning).

The device and status information can be hidden on the login page. This prevents unauthorized access to the information.

For detailed information on device parameters, see: Description of Device Parameters.

2.7.4 Access via service interface (port 2): CDI-RJ45

The device can be connected to a network via the service interface. Device-specific functions guarantee the secure operation of the device in a network.

The use of relevant industrial standards and guidelines that have been defined by national and international safety committees, such as IEC/ISA62443 or the IEEE, is recommended. This includes organizational security measures such as the assignment of access authorization as well as technical measures such as network segmentation.

For detailed information on connecting transmitters with an Ex de approval, see separate document "Safety instructions" (XA) for the device.

2.7.5 Advanced safety requirements

If the specified requirements for measures cannot be met, alternative measures may need to be put in place. This may involve, for example, mechanical protection of the product against tampering, the cabling, or organizational measures. The Proline measuring instruments can be used in the open field for example. Measures to combat physical tampering of the Proline measuring instruments must be arranged by the customer.

Additional analysis is required if Proline measuring instruments are integrated into a different system. Please note the following:
- The fieldbus network (OT) and company network (IT) must be strictly separated.
- Endress+Hauser recommends the segmentation of the fieldbus networks according to DIN IEC 62443-3-3.

Network

Pay particular attention to the network components used, the router and switches for example. The operator must guarantee the integrity of the components. Access to the network must be restricted by the operator, if necessary.

FDI Packages

Signed FDI Packages can be obtained via www.endress.com for the configuration of the field device.

User training

Depending on the application scenario, users who are not specialized in this area may come in contact with the instrument. We recommend that these users be trained in the safe use of the relevant terminals, components and/or interfaces and be made aware of security issues.

3 Product description

The device consists of a transmitter and a sensor.

The device is available as a compact version:
The transmitter and sensor form a mechanical unit.

3.1 Product design

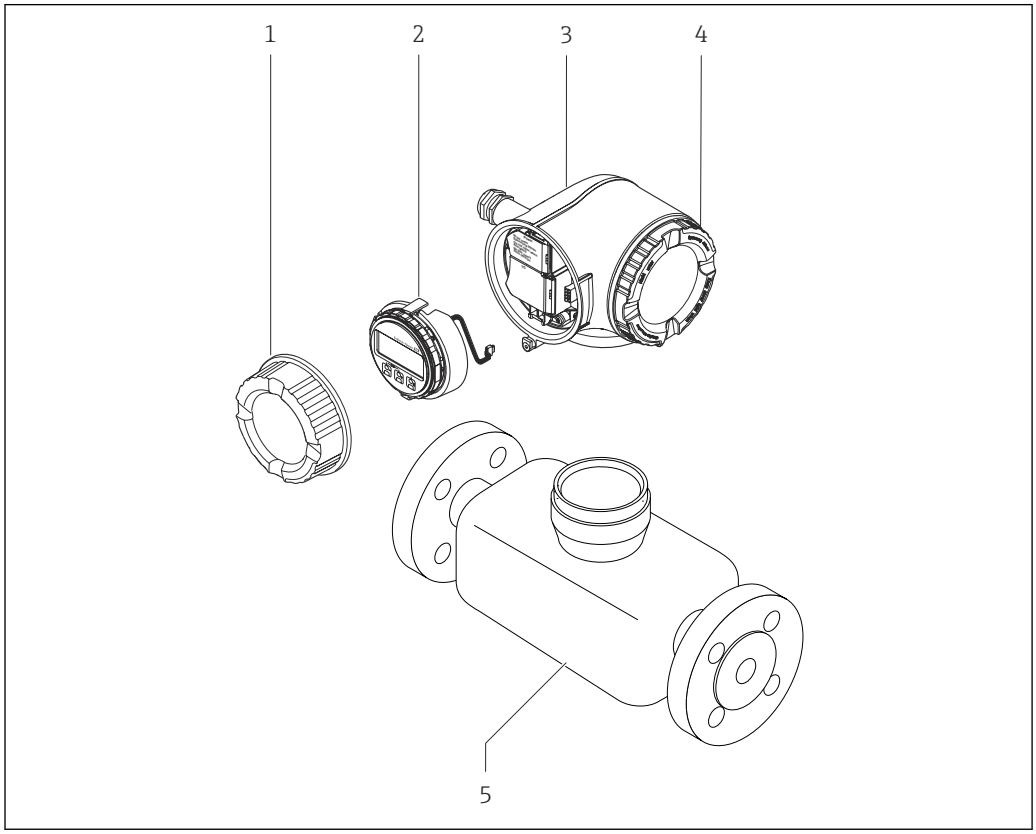

1 Important components of a measuring device

1 Connection compartment cover
2 Display module
3 Transmitter housing
4 Electronics compartment cover
5 Sensor

4 Incoming acceptance and product identification

4.1 Incoming acceptance

On receipt of the delivery:

1. Check the packaging for damage.
   ↳ Report all damage immediately to the manufacturer.
   Do not install damaged components.
2. Check the scope of delivery using the delivery note.
3. Compare the data on the nameplate with the order specifications on the delivery note.
4. Check the technical documentation and all other necessary documents, e.g. certificates, to ensure they are complete.

If one of the conditions is not satisfied, contact the manufacturer.

4.2 Product identification

The device can be identified in the following ways:
- Nameplate
- Order code with details of the device features on the delivery note
- Enter the serial numbers from the nameplates in the *Device Viewer* (www.endress.com/deviceviewer): all the information about the device is displayed.
- Enter the serial numbers from the nameplates into the *Endress+Hauser Operations app* or scan the DataMatrix code on the nameplate with the *Endress+Hauser Operations app*: all the information about the device is displayed.

For an overview of the scope of the associated Technical Documentation, refer to the following:
- The "Additional standard device documentation" and "Supplementary device-dependent documentation" sections
- The *Device Viewer*: Enter the serial number from the nameplate (www.endress.com/deviceviewer)
- The *Endress+Hauser Operations app*: Enter the serial number from the nameplate or scan the DataMatrix code on the nameplate.

4.2.1 Transmitter nameplate

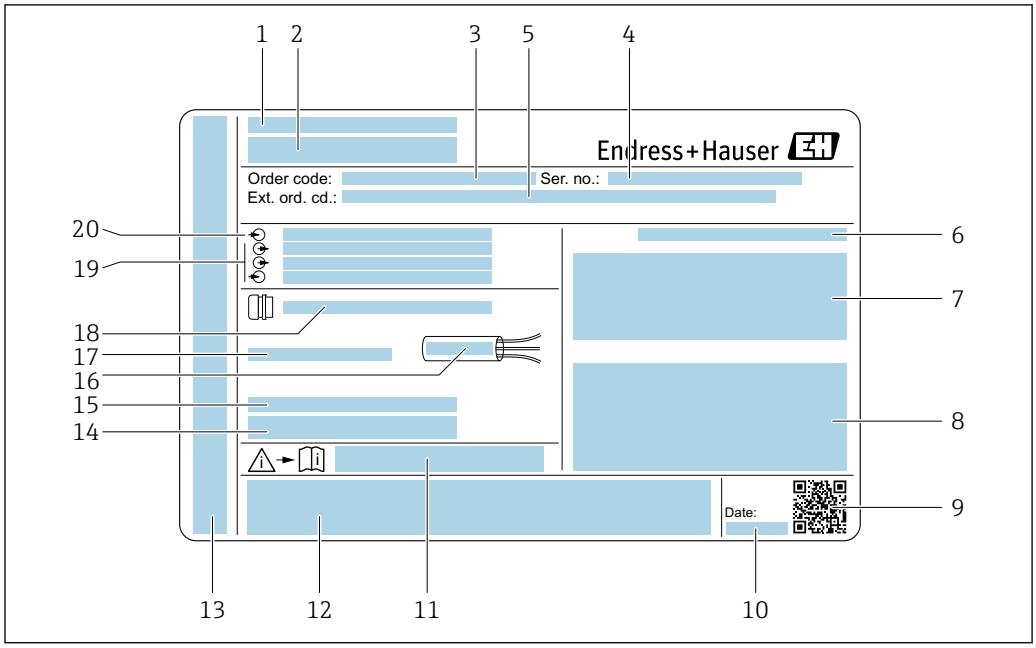

2 *Example of a transmitter nameplate*

1 *Manufacturer/certificate holder*
2 *Name of the transmitter*
3 *Order code*
4 *Serial number (Ser. no.)*
5 *Extended order code (Ext. ord. cd.)*
6 *Degree of protection*
7 *Space for approvals: use in hazardous areas*
8 *Electrical connection data: available inputs and outputs*
9 *2-D matrix code*
10 *Manufacturing date: year-month*
11 *Document number of safety-related supplementary documentation*
12 *Space for approvals and certificates: e.g. CE mark, RCM symbol*
13 *Space for degree of protection of connection and electronics compartment when used in hazardous areas*
14 *Firmware version (FW) and device revision (Dev. Rev.) from the factory*
15 *Space for additional information in the case of special products*
16 *Permitted temperature range for cable*
17 *Permitted ambient temperature (T_a)*
18 *Information on cable gland*
19 *Available inputs and outputs, supply voltage*
20 *Electrical connection data: supply voltage*

4.2.2 Sensor nameplate

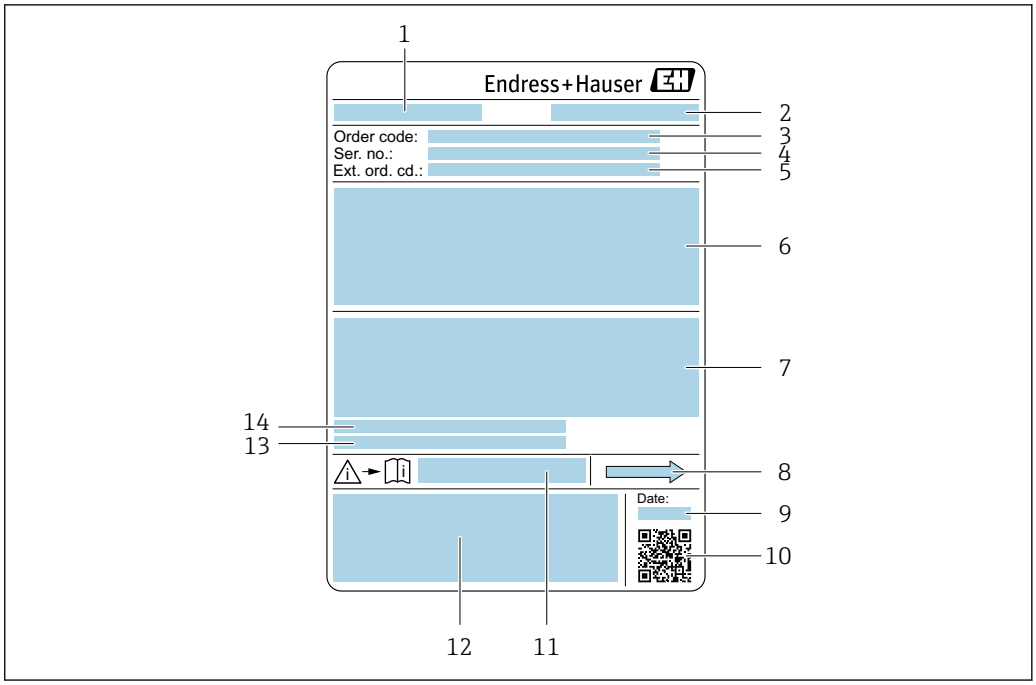

A0029199

3 *Example of a sensor nameplate*

1 *Name of sensor*
2 *Manufacturer/certificate holder*
3 *Order code*
4 *Serial number (Ser. no.)*
5 *Extended order code (Ext. ord. cd.)*
6 *Nominal diameter of the sensor; flange nominal diameter/nominal pressure; sensor test pressure; medium temperature range; material of measuring tube and manifold; sensor-specific information: e.g. pressure range of sensor housing, wide-range density specification (special density calibration)*
7 *Approval information for explosion protection, Pressure Equipment Directive and degree of protection*
8 *Flow direction*
9 *Manufacturing date: year-month*
10 *2-D matrix code*
11 *Document number of safety-related supplementary documentation*
12 *CE mark, RCM symbol*
13 *Surface roughness*
14 *Permitted ambient temperature (T_a)*

Order code
The measuring device is reordered using the order code.

Extended order code
- The device type (product root) and basic specifications (mandatory features) are always listed.
- Of the optional specifications (optional features), only the safety and approval-related specifications are listed (e.g. LA). If other optional specifications are also ordered, these are indicated collectively using the # placeholder symbol (e.g. #LA#).
- If the ordered optional specifications do not include any safety and approval-related specifications, they are indicated by the + placeholder symbol (e.g. XXXXXX-ABCDE +).

4.2.3 Symbols on the device

Symbol	Meaning
⚠	**WARNING!** This symbol alerts you to a dangerous situation. Failure to avoid this situation can result in serious or fatal injury. Please consult the documentation for the measuring instrument to discover the type of potential danger and measures to avoid it.
📖	**Reference to documentation** Refers to the corresponding device documentation.
⏚	**Protective ground connection** A terminal that must be connected to the ground prior to establishing any other connections.

5 Storage and transport

5.1 Storage conditions

Observe the following notes for storage:
- Store in the original packaging to ensure protection from shock.
- Do not remove protective covers or protective caps installed on process connections. They prevent mechanical damage to the sealing surfaces and contamination in the measuring tube.
- Protect from direct sunlight. Avoid unacceptably high surface temperatures.
- Store in a dry and dust-free place.
- Do not store outdoors.

Storage temperature → 213

5.2 Transporting the product

Transport the measuring device to the measuring point in the original packaging.

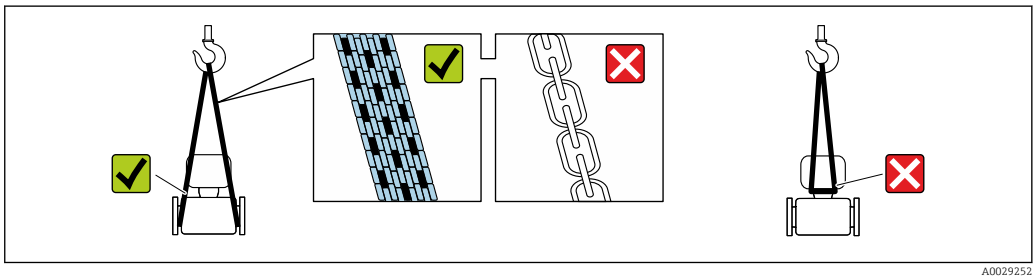

A0029252

Do not remove protective covers or caps installed on process connections. They prevent mechanical damage to the sealing surfaces and contamination in the measuring tube.

5.2.1 Measuring devices without lifting lugs

WARNING

Center of gravity of the measuring device is higher than the suspension points of the webbing slings.

Risk of injury if the measuring device slips.
- Secure the measuring device against slipping or turning.
- Observe the weight specified on the packaging (stick-on label).

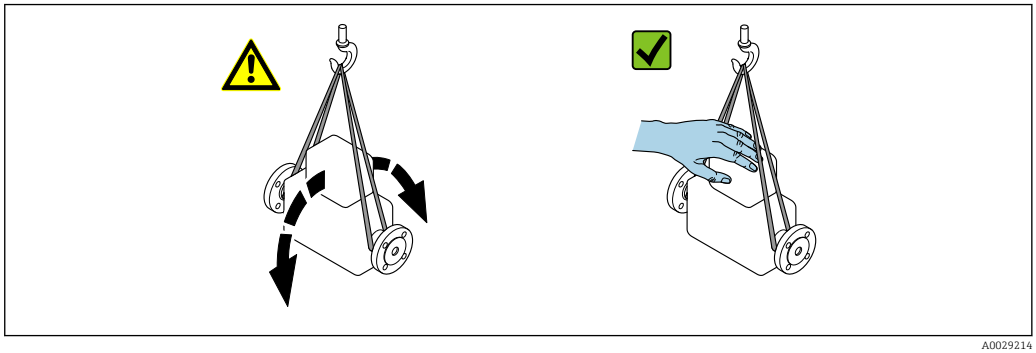

A0029214

5.2.2 Measuring devices with lifting lugs

⚠ CAUTION

Special transportation instructions for devices with lifting lugs

- ▶ Only use the lifting lugs fitted on the device or flanges to transport the device.
- ▶ The device must always be secured at two lifting lugs at least.

5.2.3 Transporting with a fork lift

If transporting in wood crates, the floor structure enables the crates to be lifted lengthwise or at both sides using a forklift.

5.3 Packaging disposal

All packaging materials are environmentally friendly and 100% recyclable:

- Outer packaging of device
  Stretch wrap made of polymer in accordance with EU Directive 2002/95/EC (RoHS)
- Packaging
  - Wood crate treated in accordance with ISPM 15 standard, confirmed by IPPC logo
  - Cardboard box in accordance with European packaging guideline 94/62/EC, recyclability confirmed by Resy symbol
- Transport material and fastening fixtures
  - Disposable plastic pallet
  - Plastic straps
  - Plastic adhesive strips
- Filler material
  Paper pads

6 Installation

6.1 Installation requirements

6.1.1 Installation position

Installation location

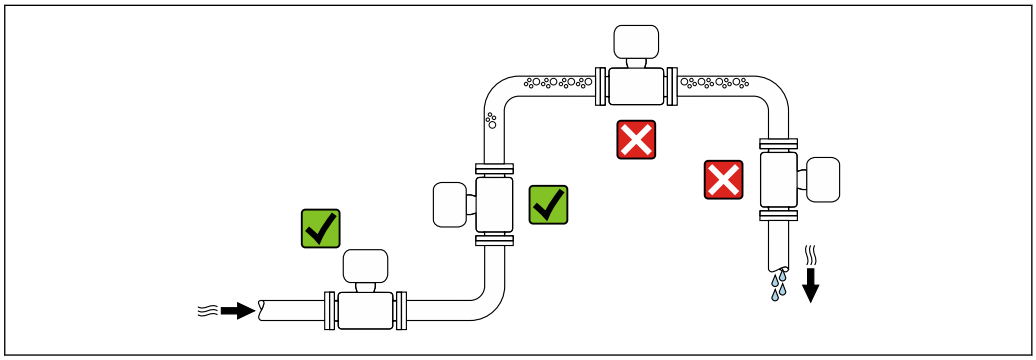

A0028772

To avoid measurement errors caused by gas bubble formation in the measuring tube, avoid the following installation locations in the pipe:
- Highest point of a pipeline
- Directly upstream of a free pipe outlet in a down pipe

Installation in down pipes

However, the following installation suggestion allows for installation in an open vertical pipeline. Pipe restrictions or the use of an orifice with a smaller cross-section than the nominal diameter prevent the sensor running empty while measurement is in progress.

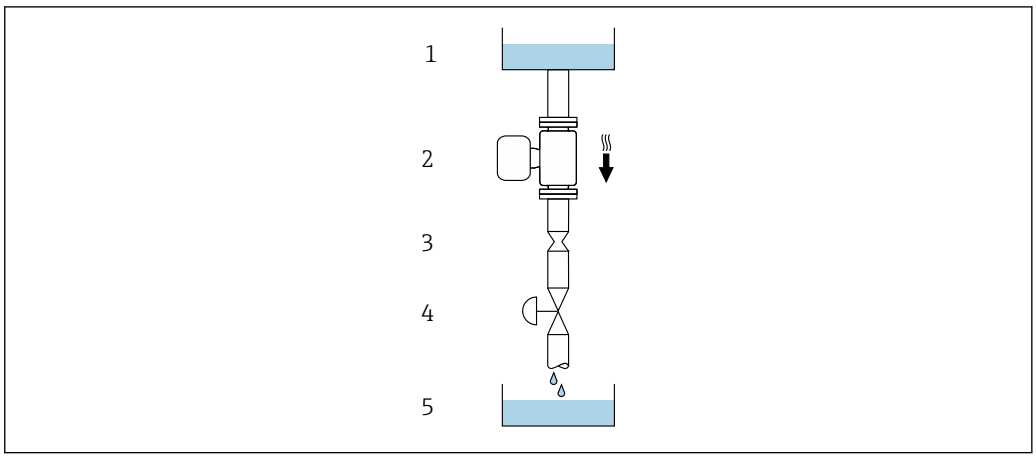

A0028773

4 *Installation in a down pipe (e.g. for batching applications)*

1 *Supply tank*
2 *Sensor*
3 *Orifice plate, pipe restriction*
4 *Valve*
5 *Filling container*

DN		Ø orifice plate, pipe restriction	
[mm]	[in]	[mm]	[in]
8	⅜	6	0.24
15	½	10	0.40
25	1	14	0.55
40	1½	22	0.87
50	2	28	1.10
80	3	50	1.97
100	4	65	2.60
150	6	90	3.54
250	10	150	5.91

Orientation

The direction of the arrow on the sensor nameplate helps you to install the sensor according to the flow direction (direction of medium flow through the piping).

Orientation			Recommendation
A	Vertical orientation	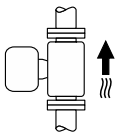 A0015591	✓✓ 1)
B	Horizontal orientation, transmitter at top	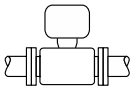 A0015589	✓✓ 2) Exception: → 5, 23
C	Horizontal orientation, transmitter at bottom	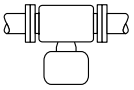 A0015590	✓✓ 3) Exception: → 5, 23
D	Horizontal orientation, transmitter at side	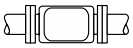 A0015592	✗

1) This orientation is recommended to ensure self-draining.
2) Applications with low process temperatures may reduce the ambient temperature. To maintain the minimum ambient temperature for the transmitter, this orientation is recommended.
3) Applications with high process temperatures may increase the ambient temperature. To maintain the maximum ambient temperature for the transmitter, this orientation is recommended.

If a sensor is installed horizontally with a curved measuring tube, match the position of the sensor to the medium properties.

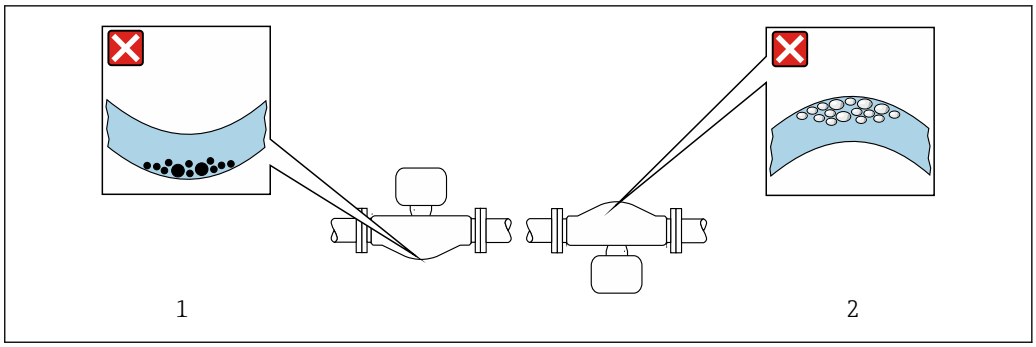

5 Orientation of sensor with curved measuring tube

1 Avoid this orientation for media with entrained solids: Risk of solids accumulating
2 Avoid this orientation for outgassing media: Risk of gas accumulating

Inlet and outlet runs

No special precautions need to be taken for fittings that create turbulence, such as valves, elbows or T-pieces, as long as no cavitation occurs → 23.

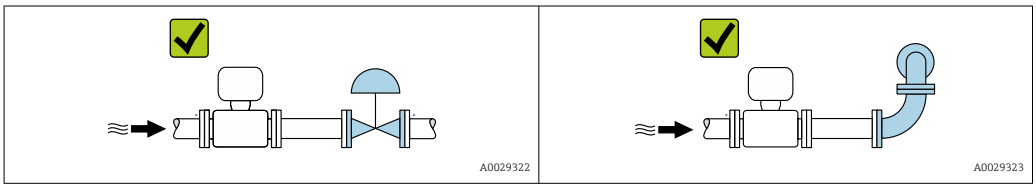

Installation dimensions

For the dimensions and installed lengths of the device, see the "Technical Information" document, "Mechanical construction" section

6.1.2 Environmental and process requirements

Ambient temperature range

Measuring instrument	▪ −40 to +60 °C (−40 to +140 °F) ▪ Order code for "Test, certificate", option JP: −50 to +60 °C (−58 to +140 °F)
Readability of the local display	−20 to +60 °C (−4 to +140 °F) The readability of the display may be impaired at temperatures outside the temperature range.

Dependency of ambient temperature on medium temperature → 214

▶ If operating outdoors:
Avoid direct sunlight, particularly in warm climatic regions.

You can order a weather protection cover from Endress+Hauser. → 193.

Static pressure

It is important that cavitation does not occur, or that gases entrained in the liquids do not outgas.

Cavitation is caused if the pressure drops below the vapor pressure:
- In liquids that have a low boiling point (e.g. hydrocarbons, solvents, liquefied gases)
- In suction lines

▶ Ensure the static pressure is sufficiently high to prevent cavitation and outgassing.

For this reason, the following mounting locations are recommended:
- At the lowest point in a vertical pipe
- Downstream from pumps (no danger of vacuum)

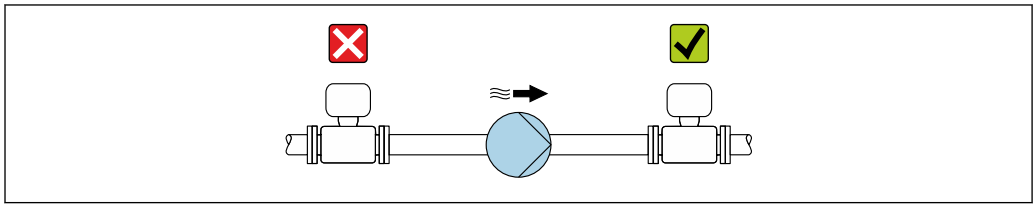

A0028777

Thermal insulation

In the case of some fluids, it is important to keep the heat radiated from the sensor to the transmitter to a low level. A wide range of materials can be used for the required insulation.

The following device versions are recommended for versions with thermal insulation:
- Version with extended neck for insulation:
  Order code for "Sensor option", option CG with an extended neck length of 105 mm (4.13 in).
- Extended temperature version:
  Order code for "Measuring tube material", option SD, SE, SF or TH with an extended neck length of 105 mm (4.13 in).
- High-temperature version:
  Order code for "Measuring tube material", option TS, TT or TU with an extended neck length of 142 mm (5.59 in).

NOTICE

Electronics overheating on account of thermal insulation!
- ▶ Recommended orientation: horizontal orientation, transmitter housing pointing downwards.
- ▶ Do not insulate the transmitter housing .
- ▶ Maximum permissible temperature at the lower end of the transmitter housing: 80 °C (176 °F)
- ▶ Regarding thermal insulation with an exposed extended neck: We advise against insulating the extended neck to ensure optimal heat dissipation.

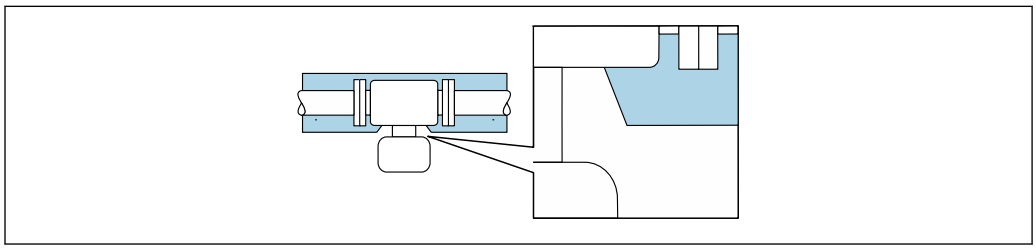

A0034391

6 Thermal insulation with exposed extended neck

Low-temperature version: It is generally not necessary to insulate the transmitter housing . If insulation is provided, the rules that apply are the same as those for thermal insulation.

Heating

NOTICE

Electronics can overheat due to elevated ambient temperature!

- Observe maximum permitted ambient temperature for the transmitter.
- Depending on the medium temperature, take the device orientation requirements into account.

NOTICE

Danger of overheating when heating

- Ensure that the temperature at the lower end of the transmitter housing does not exceed 80 °C (176 °F).
- Ensure that sufficient convection takes place at the transmitter neck.
- Ensure that a sufficiently large area of the transmitter neck remains exposed. The uncovered part serves as a radiator and protects the electronics from overheating and excessive cooling.
- When using in potentially explosive atmospheres, observe the information in the device-specific Ex documentation. For detailed information on the temperature tables, see the separate document entitled "Safety Instructions" (XA) for the device.
- Consider the behavior of the process diagnostics "830 Ambient temperature too high" and "832 Electronics temperature too high" if overheating cannot be avoided by a suitable system design.

Heating options

If a medium requires that no heat loss should occur at the sensor, users can avail of the following heating options:

- Electrical heating, e.g. with electric band heaters [2)]
- Via pipes carrying hot water or steam
- Via heating jackets

Vibrations

The high oscillation frequency of the measuring tubes ensures that the correct operation of the measuring system is not influenced by plant vibrations.

6.1.3 Special installation instructions

Drainability

When installed vertically, the measuring tubes can be drained completely and protected against buildup.

Hygienic compatibility

- When installing in hygienic applications, please refer to the information in the "Certificates and approvals/hygienic compatibility" section → 227
- In the case of measuring devices with the order code for "Housing", option B "Stainless, hygienic", to seal the connection compartment cover, screw it closed finger-tight and tighten it by another 45° (corresponds to 15 Nm).

Rupture disk

Process-related information: → 217.

2) The use of parallel electric band heaters is generally recommended (bidirectional electricity flow). Particular considerations must be made if a single-wire heating cable is to be used. Additional information is provided in the document EA01339D "Installation instructions for electrical trace heating systems".

WARNING

Danger from medium escaping!

Medium escaping under pressure can cause injury or material damage.

- ▶ Take precautions to prevent danger to persons and damage if the rupture disk is actuated.
- ▶ Observe the information on the rupture disk sticker.
- ▶ Make sure that the function and operation of the rupture disk is not impeded through the installation of the device.
- ▶ Do not use a heating jacket.
- ▶ Do not remove or damage the rupture disk.

The position of the rupture disk is indicated by a sticker affixed beside it.

The transportation guard must be removed.

The existing connecting nozzles are not intended for the purpose of rinsing or pressure monitoring, but instead serve as the mounting location for the rupture disk.

In the event of a failure of the rupture disk, a drain device can be screwed onto the internal thread of the rupture disk in order to drain off any escaping medium.

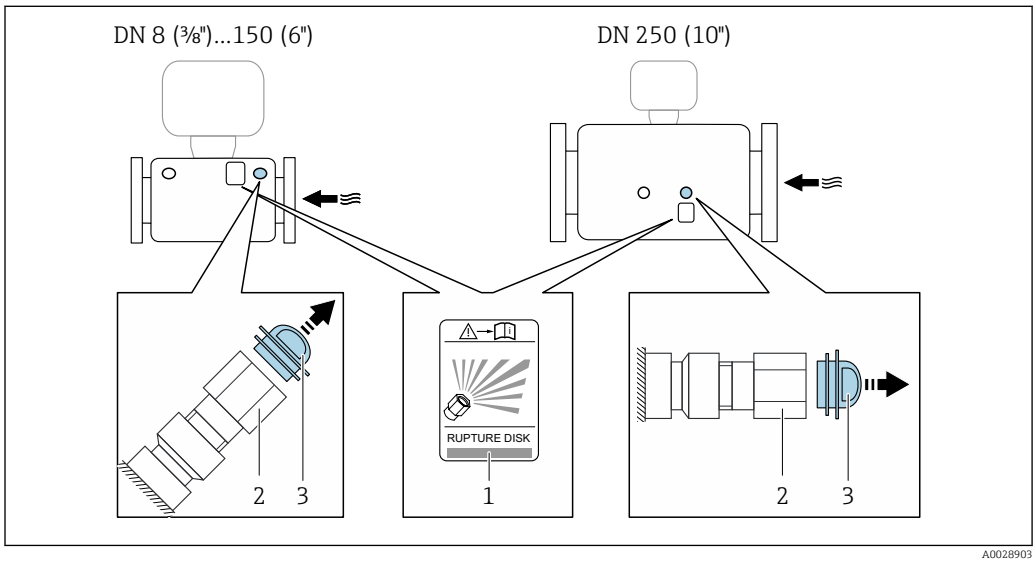

1 *Rupture disk label*
2 *Rupture disk with 1/2" NPT internal thread and 1" width across flats*
3 *Transport protection*

For information on the dimensions, see the "Technical Information" document, "Mechanical construction" section (accessories).

Zero point verification and zero adjustment

All measuring instruments are calibrated in accordance with state-of-the-art technology. Calibration takes place under reference conditions → 207. Therefore, a zero adjustment in the field is generally not required.

Experience shows that zero adjustment is advisable only in special cases:

- To achieve maximum measurement accuracy even with low flow rates.
- Under extreme process or operating conditions (e.g. very high process temperatures or very high-viscosity media).
- For gas applications with low pressure.

To achieve the highest possible measurement accuracy at low flow rates, the installation must protect the sensor from mechanical stress during operation.

To get a representative zero point, ensure that
- any flow in the device is prevented during the adjustment
- the process conditions (e.g. pressure, temperature) are stable and representative

Verification and adjustment cannot be performed if the following process conditions are present:
- Gas pockets
  Ensure that the system has been sufficiently flushed with the medium. Repeat flushing can help to eliminate gas pockets
- Thermal circulation
  In the event of temperature differences (e.g. between the measuring tube inlet and outlet section), induced flow can occur even if the valves are closed due to thermal circulation in the device
- Leaks at the valves
  If the valves are not leak-tight, flow is not sufficiently prevented when determining the zero point

If these conditions cannot be avoided, it is advisable to keep the factory setting for the zero point.

Protective cover

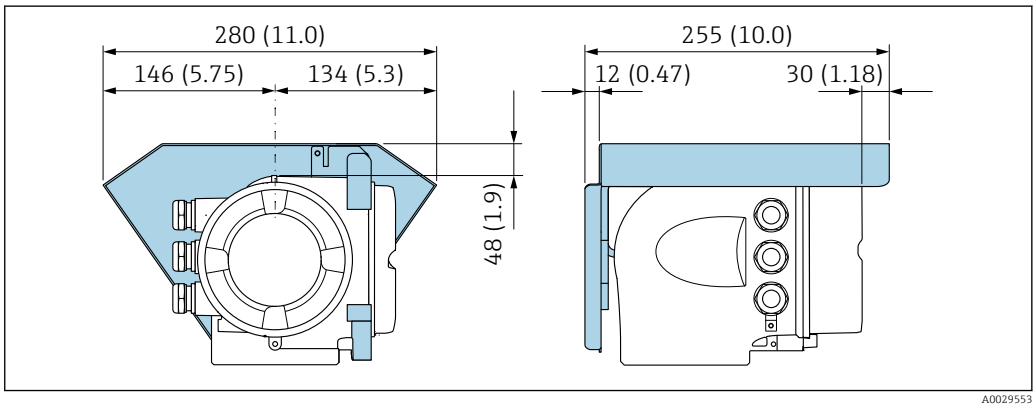

7 *Unit mm (in)*

Cover lock

NOTICE

Order code "Housing", option L "Cast, stainless": The covers of the transmitter housing are provided with a borehole to lock the cover.

The cover can be locked using screws and a chain or cable provided by the customer on site.
- ▶ The use of stainless steel chains or cables is recommended.
- ▶ If a protective coating is applied, it is recommended to use a heat shrink tube to protect the housing paint.

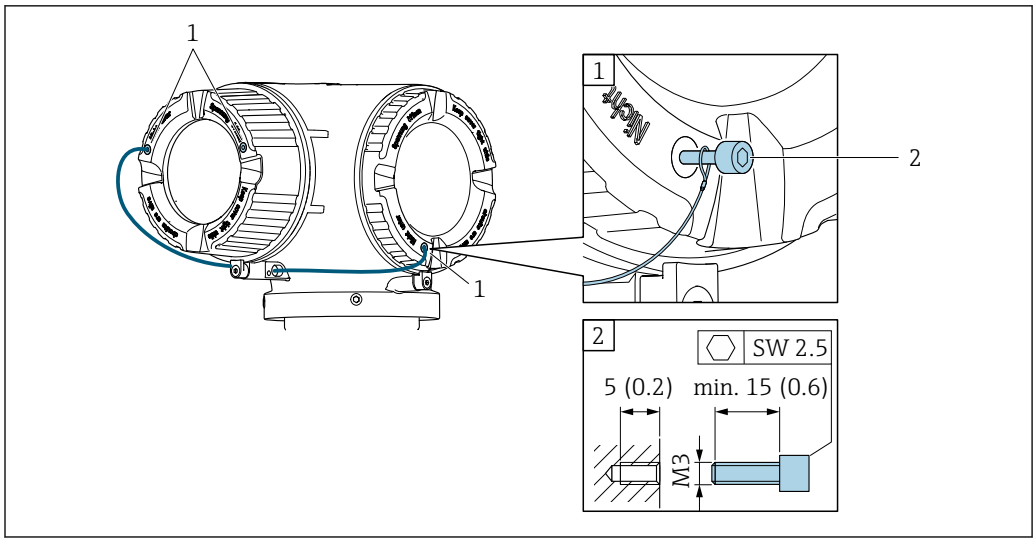

1 Cover borehole for the securing screw
2 Securing screw to lock the cover

6.2 Installing the device

6.2.1 Required tools

For sensor

For flanges and other process connections: Use a suitable mounting tool.

6.2.2 Preparing the measuring instrument

1. Remove all remaining transport packaging.
2. Remove any protective covers or protective caps present from the sensor.
3. Remove stick-on label on the electronics compartment cover.

6.2.3 Installing the measuring instrument

⚠ WARNING

Danger due to improper process sealing!

- ▶ Ensure that the inside diameters of the gaskets are greater than or equal to that of the process connections and piping.
- ▶ Ensure that the seals and sealing surfaces are clean and undamaged.
- ▶ Secure the seals correctly.

1. Ensure that the direction of the arrow on the nameplate of the sensor matches the flow direction of the medium.

2. Install the measuring instrument or turn the transmitter housing so that the cable entries do not point upwards.

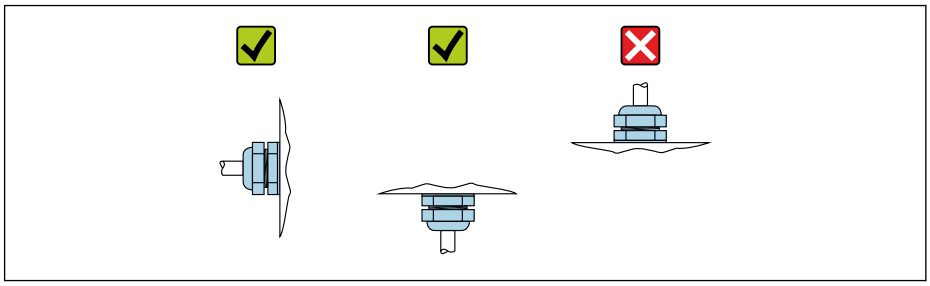

A0029263

6.2.4 Turning the transmitter housing

To provide easier access to the connection compartment or display module, the transmitter housing can be turned.

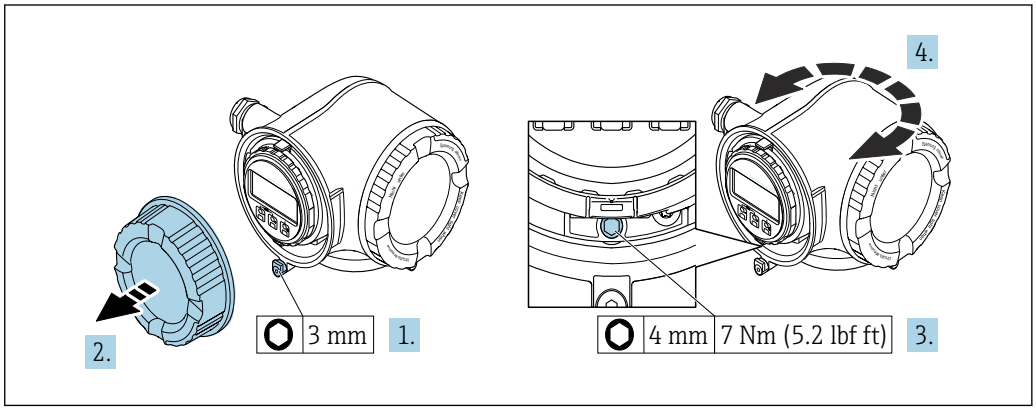

A0029993

8 *Housing in non-Ex version*

1. Depending on the device version: Loosen the securing clamp of the connection compartment cover.
2. Unscrew the connection compartment cover.
3. Loosen the fixing screw.
4. Turn the housing to the desired position.
5. Tighten the securing screw.
6. Screw on the connection compartment cover.
7. Depending on the device version: Attach the securing clamp of the connection compartment cover.

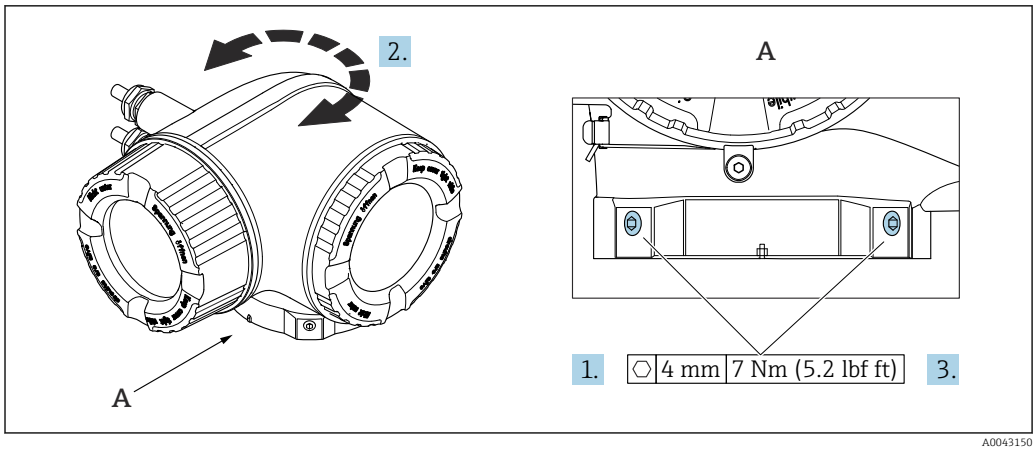

9 *Ex housing*

1. Loosen the fixing screws.
2. Turn the housing to the desired position.
3. Tighten the securing screws.

6.2.5 Turning the display module

The display module can be turned to optimize display readability and operability.

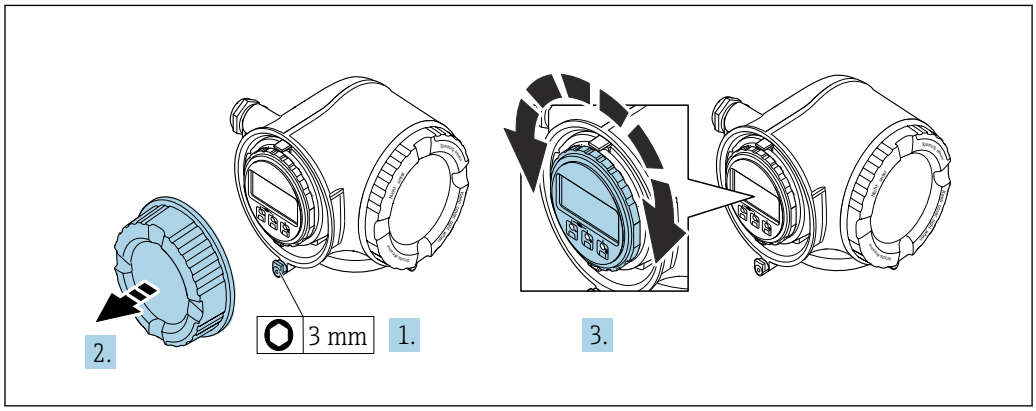

1. Depending on the device version: Loosen the securing clamp of the connection compartment cover.
2. Unscrew the connection compartment cover.
3. Turn the display module to the desired position: max. 8 × 45° in each direction.
4. Screw on the connection compartment cover.
5. Depending on the device version: Attach the securing clamp of the connection compartment cover.

6.3 Post-installation check

Is the device undamaged (visual inspection)?	❑
Does the measuring instrument correspond to the measuring point specifications? For example: ▪ Process temperature → 🗎 214 ▪ Pressure (refer to the "Pressure-temperature ratings" section of the "Technical Information" document). ▪ Ambient temperature ▪ Measuring range	❑
Has the correct orientation for the sensor been selected → 🗎 22? ▪ According to sensor type ▪ According to medium temperature ▪ According to medium properties (outgassing, with entrained solids)	❑
Does the arrow on the sensor match the direction of flow of the medium? → 🗎 22?	❑
Is the tag name and labeling correct (visual inspection)?	❑
Is the device sufficiently protected from precipitation and direct sunlight?	❑
Are the securing screw and securing clamp tightened securely?	❑

7 Electrical connection

WARNING

Live parts! Incorrect work performed on the electrical connections can result in an electric shock.

- Set up a disconnecting device (switch or power-circuit breaker) to easily disconnect the device from the supply voltage.
- In addition to the device fuse, include an overcurrent protection unit with max. 10 A in the plant installation.

7.1 Electrical safety

In accordance with applicable national regulations.

7.2 Connecting requirements

7.2.1 Required tools

- For cable entries: Use corresponding tools
- For securing clamp: Allen key 3 mm
- Wire stripper
- When using stranded cables: Crimper for wire end ferrule
- For removing cables from terminal: Flat blade screwdriver ≤ 3 mm (0.12 in)

7.2.2 Requirements for connecting cable

The connecting cables provided by the customer must fulfill the following requirements.

Protective grounding cable for the outer ground terminal

Conductor cross-section < 6 mm^2 (10 AWG)

The use of a cable lug enables the connection of larger cross-sections.

The grounding impedance must be less than 2 Ω.

Permitted temperature range

- The installation guidelines that apply in the country of installation must be observed.
- The cables must be suitable for the minimum and maximum temperatures to be expected.

Power supply cable (incl. conductor for the inner ground terminal)

Standard installation cable is sufficient.

Signal cable

For custody transfer, all signal lines must be shielded cables (tinned copper braiding, optical coverage ≥ 85 %). The cable shield must be connected on both sides.

4 to 20 mA current input

Standard installation cable is sufficient.

Pulse/frequency/switch output

Standard installation cable is sufficient.

Relay output

Standard installation cable is sufficient.

Status input

Standard installation cable is sufficient.

Ethernet-APL

Shielded twisted-pair cable. Cable type A is recommended.

See https://www.profibus.com Ethernet-APL White Paper "

Cable diameter

- Cable glands supplied:
  M20 × 1.5 with cable ⌀ 6 to 12 mm (0.24 to 0.47 in)
- Spring-loaded terminals: Suitable for strands and strands with ferrules.
  Conductor cross-section 0.2 to 2.5 mm^2 (24 to 12 AWG).

Requirements for connecting cable – remote display and operating module DKX001

Optionally available connecting cable

A cable is supplied depending on the order option
- Order code for measuring device: order code **030** for "Display; operation", option **O**
  or
- Order code for measuring device: order code **030** for "Display; operation", option **M**
  and
- Order code for DKX001: order code **040** for "Cable", option **A, B, D, E**

Standard cable	2 × 2 × 0.34 mm^2 (22 AWG) PVC cable with common shield (2 pairs, pair-stranded)
Flame resistance	According to DIN EN 60332-1-2
Oil resistance	According to DIN EN 60811-2-1
Shield	Tin-plated copper braid, optical cover ≥ 85 %
Capacitance: core/shield	≤ 200 pF/m
L/R	≤ 24 µH/Ω
Available cable length	5 m (15 ft)/10 m (35 ft)/20 m (65 ft)/30 m (100 ft)
Operating temperature	When mounted in a fixed position: −50 to +105 °C (−58 to +221 °F); when cable can move freely: −25 to +105 °C (−13 to +221 °F)

Standard cable - customer-specific cable

With the following order option, no cable is supplied with the device and must be provided by the customer:
Order code for DKX001: Order code **040** for "Cable", option **1** "None, provided by customer, max 300 m"

A standard cable with the following minimum requirements can be used as the connecting cable, even in the hazardous area (Zone 2, Class I, Division 2 and Zone 1, Class I, Division 1):

Standard cable	4 wires (2 pairs); pair-stranded with common shield, minimum wire cross-section 0.34 mm^2 (22 AWG)
Shield	Tin-plated copper braid, optical cover ≥ 85 %
Cable impedance (pair)	Minimum 80 Ω

Cable length	Maximum 300 m (1 000 ft), maximum loop impedance 20 Ω
Capacitance: core/shield	Maximum 1 000 nF for Zone 1, Class I, Division 1
L/R	Maximum 24 µH/Ω for Zone 1, Class I, Division 1

7.2.3 Terminal assignment

Transmitter: supply voltage, input/outputs

The terminal assignment of the inputs and outputs depends on the individual order version of the device. The device-specific terminal assignment is documented on an adhesive label in the terminal cover.

Modbus TCP

Supply voltage		Input/output 1 (Port 1 [1])		Input/output 2		Input/output 3		Service interface (Port 2) [1]
1 (+)	2 (–)	26 (+)	27 (-)	24 (+)	25 (–)	22 (+)	23 (–)	CDI-RJ45
				Device-specific terminal assignment: adhesive label in terminal cover.				

1) For Modbus TCP communication, either port 1 OR port 2 can be used.

Terminal assignment of the remote display and operating module → 40.

7.2.4 Available device plugs for Proline 300

Device plugs may not be used in hazardous areas!

Order code for "Input; output 1", option MB "Modbus TCP over Ethernet-APL"

Order code for "Electrical connection"	Accessories	Cable entry/connection	
		2	3
L, N, P, U	-	Connector M12×1 A-coded	–
L, N, P, U	NB [1]	Connector M12×1 A-coded	Connector M12×1 [1] D-coded
1 [2], 2 [2], 7 [2], 8 [2]	–	–	Connector M12×1 D-coded

1) Cannot be used as a Modbus TCP port.
2) Not compatible with an external WLAN antenna (order code for "Accessory enclosed", option P8, an RJ45 M12 adapter for the service interface (order code for "Accessory mounted", option NB) or a remote operating and display module DKX001.

7.2.5 Modbus TCP over Ethernet-APL 10 Mbit/s

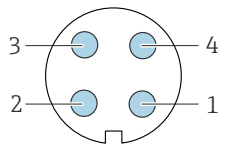

Pin	Assignment	Coding	Plug/socket
1	APL signal -	A	Socket
2	APL signal +		
3	Cable shield[1]		
4	Not used		
Metal plug housing	Cable shield		
[1]If a cable shield is used			

7.2.6 Modbus TCP over Ethernet 100 Mbit/s

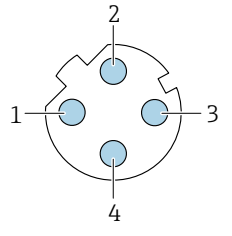

Pin	Assignment		Coding	Plug/socket
1	+	Tx	D	Socket
2	+	Rx		
3	-	Tx		
4	-	Rx		

7.2.7 Shielding and grounding

Shielding and grounding concept

1. Maintain electromagnetic compatibility (EMC).
2. Take explosion protection into consideration.
3. Pay attention to the protection of persons.
4. Comply with national installation regulations and guidelines.
5. Observe cable specifications .
6. Keep the stripped and twisted lengths of cable shield to the ground terminal as short as possible.
7. Shield cables fully.

Grounding of the cable shield

NOTICE

In systems without potential matching, the multiple grounding of the cable shield causes mains frequency equalizing currents!
Damage to the bus cable shield.
- Only ground the bus cable shield to either the local ground or the protective ground at one end.
- Insulate the shield that is not connected.

To comply with EMC requirements:

1. Ensure the cable shield is grounded to the potential matching line at multiple points.
2. Connect every local ground terminal to the potential matching line.

7.2.8 Preparing the measuring instrument

NOTICE

Insufficient sealing of the housing!
Operational reliability of the measuring device could be compromised.
- Use suitable cable glands corresponding to the degree of protection.

1. Remove dummy plug if present.
2. If the measuring device is supplied without cable glands:
   Provide suitable cable gland for corresponding connecting cable.
3. If the measuring device is supplied with cable glands:
   Observe requirements for connecting cables → 📄 32.

7.3 Connecting the device

NOTICE

An incorrect connection compromises electrical safety!

- Only properly trained specialist staff may perform electrical connection work.
- Observe applicable federal/national installation codes and regulations.
- Comply with local workplace safety regulations.
- Always connect the protective ground cable ⏚ before connecting additional cables.
- When using in potentially explosive atmospheres, observe the information in the device-specific Ex documentation.

7.3.1 Connecting the transmitter

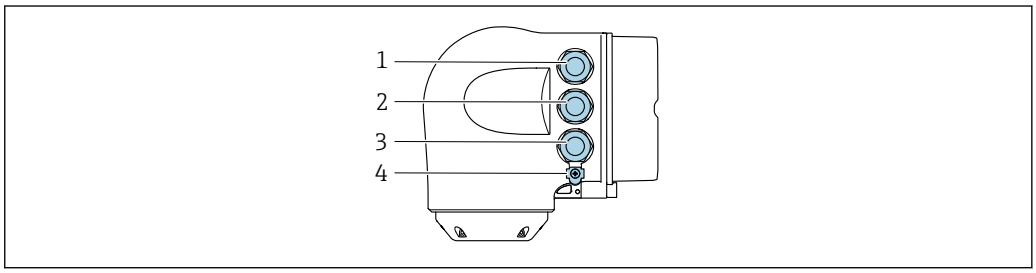

A0026781

1 *Terminal connection for supply voltage*
2 *Terminal connection for signal transmission, input/output*
3 *Terminal connection for signal transmission, input/output or terminal connection for network connection via service interface (CDI-RJ45); optional: connection for external WLAN antenna or remote display and operating module DKX001*
4 *Protective earth (PE)*

In addition to connecting the device via Modbus TCP over Ethernet-APL and the available inputs/outputs, an additional connection option is also available: Integrate into a network via the service interface (CDI-RJ45) .

Connecting connector

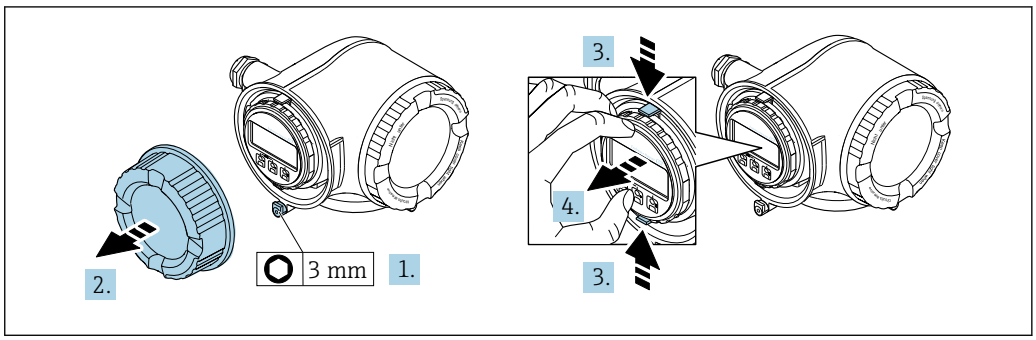

A0029813

1. Loosen the securing clamp of the connection compartment cover.
2. Unscrew the connection compartment cover.
3. Squeeze the tabs of the display module holder together.
4. Remove the display module holder.

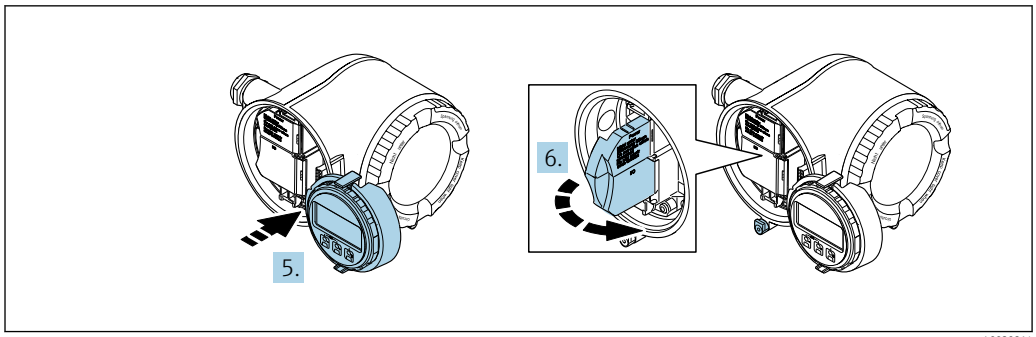

A0029814

5. Attach the holder to the edge of the electronics compartment.
6. Open the terminal cover.

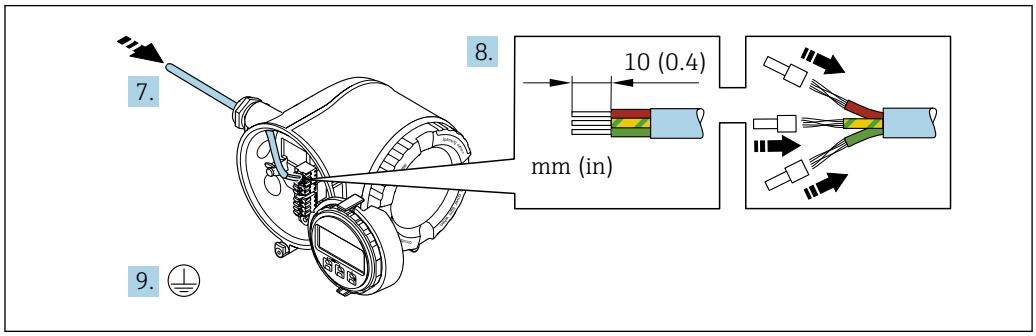

A0051111

7. Push the cable through the cable entry. To ensure tight sealing, do not remove the sealing ring from the cable entry.
8. Strip the cable and cable ends and connect to terminals 26-27. In the case of stranded cables, also fit ferrules.
9. Connect protective earth (PE).
10. Firmly tighten the cable glands.
    ↳ This concludes the connection via the APL port.

Connecting the supply voltage and additional inputs/outputs

1. Push the cable through the cable entry. To ensure tight sealing, do not remove the sealing ring from the cable entry.
2. Strip the cable and cable ends. In the case of stranded cables, also fit ferrules.
3. Connect the protective ground.

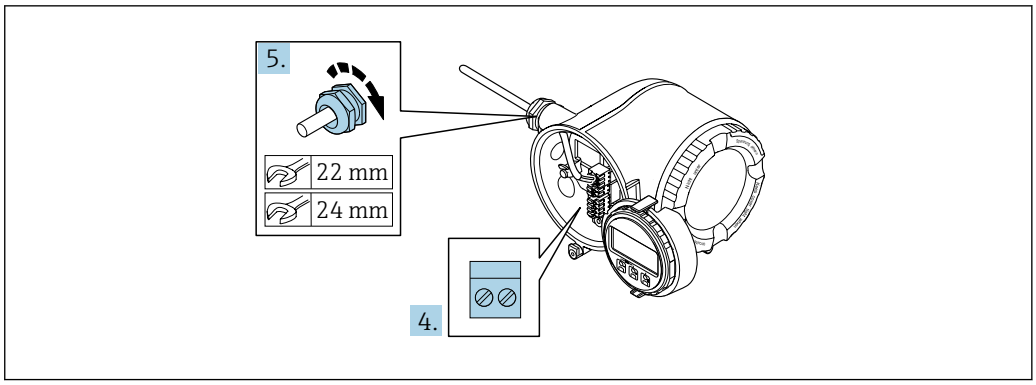

A0033984

4. Connect the cable according to the terminal assignment.
   ↳ **Signal cable terminal assignment:** The device-specific terminal assignment is documented on an adhesive label in the terminal cover.
   Supply voltage terminal assignment: Adhesive label in the terminal cover or → 35.
5. Firmly tighten the cable glands.
   ↳ This concludes the cable connection process.
6. Close the terminal cover.
7. Fit the display module holder in the electronics compartment.
8. Screw on the connection compartment cover.
9. Secure the securing clamp of the connection compartment cover.

Removing a cable

To remove a cable from the terminal:

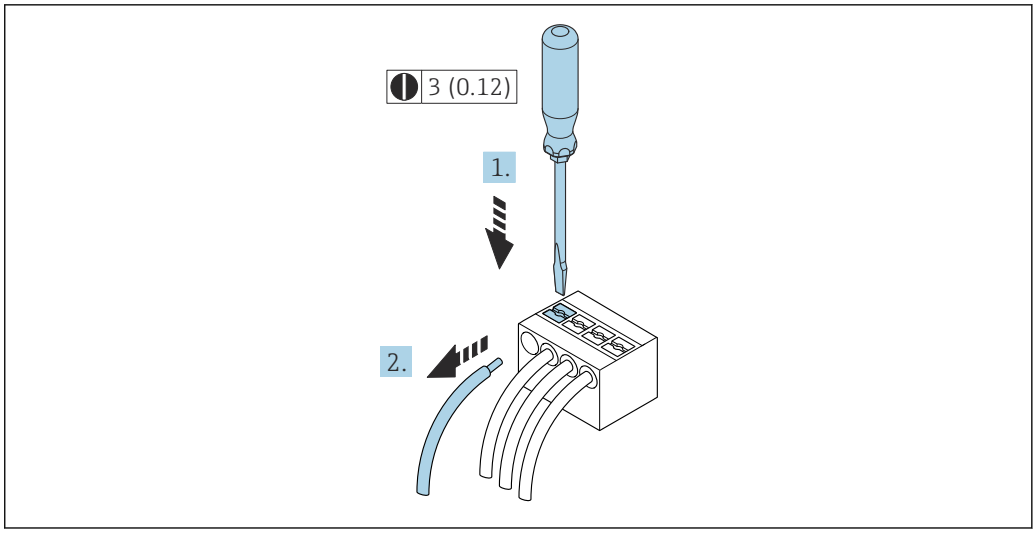

A0029598

10 Engineering unit mm (in)

1. Use a flat-blade screwdriver to press down on the slot between the two terminal holes.
2. Remove the cable end from the terminal.

7.3.2 Connecting the remote display and operating module DKX001

The remote display and operating module DKX001 is available as an optional extra → 193..

- The remote display and operating module DKX001 is only available for the following housing versions, order code for "Housing":
  - Option A "Aluminum, coated"
  - Option L "Cast, stainless"
- The measuring instrument is always supplied with a dummy cover when the remote display and operating module DKX001 is ordered directly with the measuring instrument. Display or operation at the transmitter is not possible in this case.
- If ordered subsequently, the remote display and operating module DKX001 may not be connected at the same time as the existing measuring instrument display module. Only one display or operation unit may be connected to the transmitter at any one time.

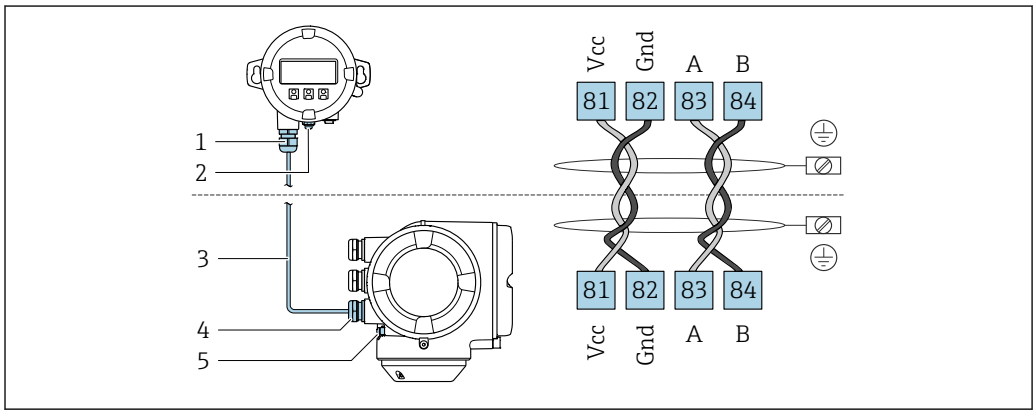

1 *Remote display and operating module DKX001*
2 *Terminal connection for potential equalization (PE)*
3 *Connecting cable*
4 *Measuring instrument*
5 *Terminal connection for potential equalization (PE)*

7.4 Potential equalization

7.4.1 Requirements

For potential equalization:
- Pay attention to in-house grounding concepts
- Take account of operating conditions, such as the pipe material and grounding
- Connect the medium, sensor and transmitter to the same electric potential
- Use a ground cable with a minimum cross-section of 6 mm^2 (10 AWG) and a cable lug for potential equalization connections

7.5 Special connection instructions

7.5.1 Connection examples

Current output 4 to 20 mA (without HART)

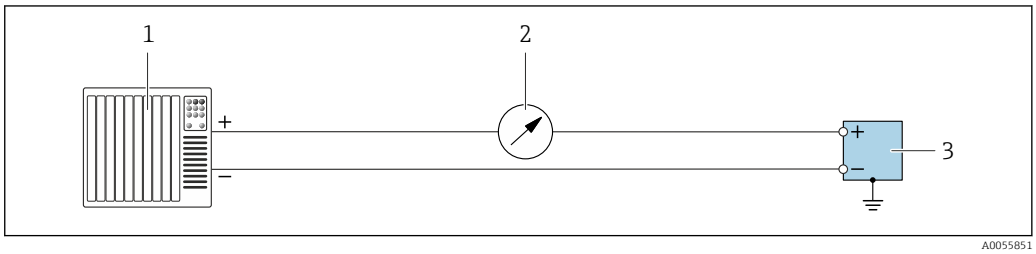

11 Connection example for 4 to 20 mA current output (active)

1 *Automation system with current input (e.g. PLC)*
2 *Optional additional display unit: Observe maximum load*
3 *Flowmeter with current output (active)*

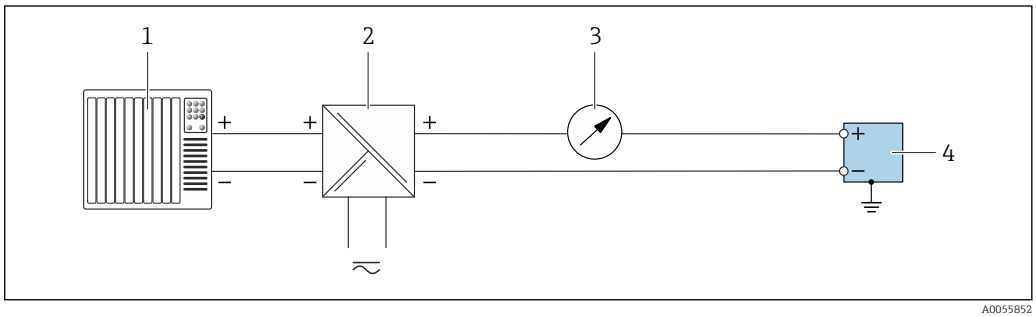

12 Connection example for 4 to 20 mA current output (passive)

1 *Automation system with current input (e.g. PLC)*
2 *Power supply*
3 *Optional additional display unit: Observe maximum load*
4 *Transmitter with current output (passive)*

Current input 4 to 20 mA

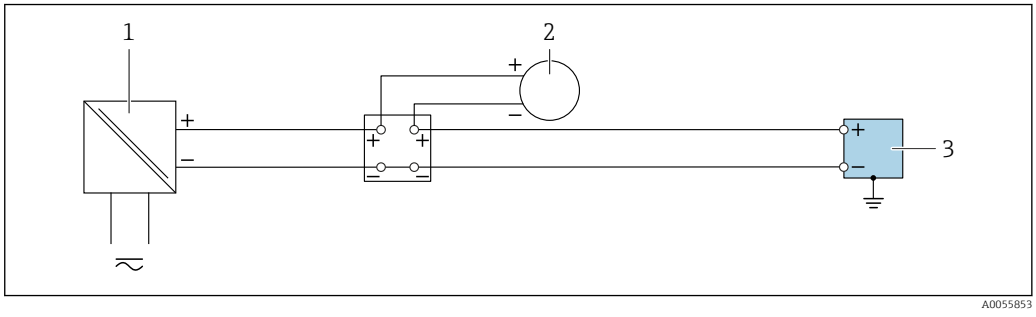

13 Connection example for 4 to 20 mA current input

1 *Power supply*
2 *External measuring instrument with 4 to 20 mA passive current output. e.g. pressure or temperature)*
3 *Transmitter with 4 to 20 mA current input*

Pulse output/frequency output/switch output

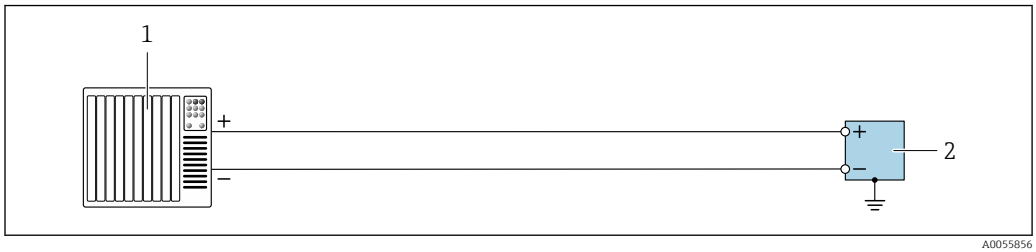

14 Connection example for pulse output/frequency output/switch output (active)

1 Automation system with pulse input/frequency input/switch input (e.g. PLC)
2 Transmitter with pulse output/frequency output/switch output (active)

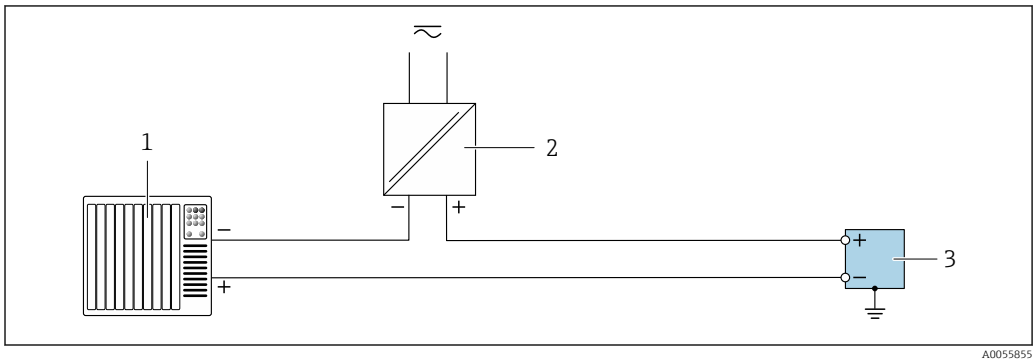

15 Connection example for pulse output/frequency output/switch output (passive)

1 Automation system with pulse input/frequency input/switch input (e.g. PLC)
2 Power supply
3 Transmitter with pulse output/frequency output/switch output (passive)

Relay output

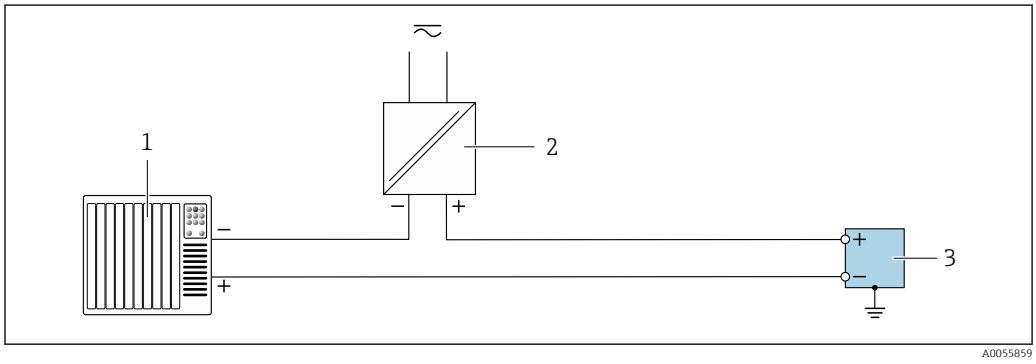

16 Connection example for relay output

1 Automation system with switch input (e.g. PLC)
2 Power supply
3 Transmitter with relay output

Status input

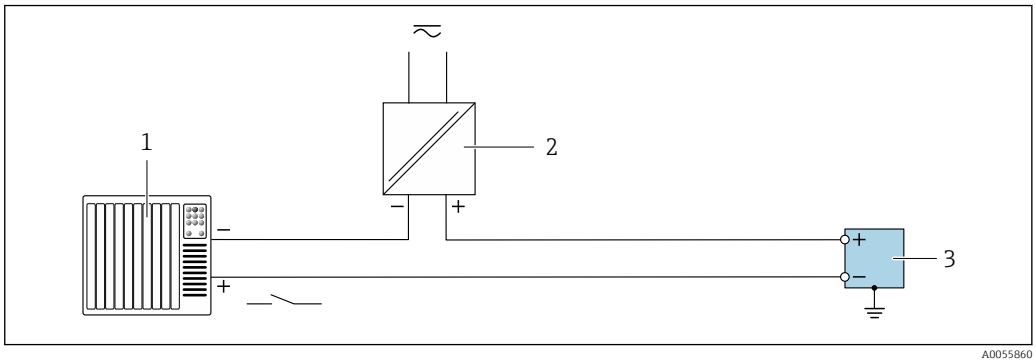

17 *Connection example for status input*

1 *Automation system with switch output passive e.g. PLC)*
2 *Power supply*
3 *Transmitter with status input*

Ethernet-APL

See https://www.profibus.com Ethernet-APL White Paper "

7.6 Hardware settings

7.6.1 Setting the device address

The IP address of the measuring device can be configured for the network via DIP switches.

Addressing data

IP address and configuration options			
1st octet	2nd octet	3rd octet	4th octet
192.	**168.**	**1.**	**XXX**
	↓		↓
	Can only be configured via software addressing		Can be configured via software addressing and hardware addressing

IP address range	1 to 254 (4th octet)
IP address broadcast	255
Addressing mode ex works	Software addressing; all DIP switches for hardware addressing are set to OFF.
IP address ex works	DHCP server active

Software addressing: The IP address is entered via the **IP address** parameter (→ 78) .

Setting the IP address

Risk of electric shock when opening the transmitter housing.
- Before opening the transmitter housing:
- Disconnect the device from the power supply.

The default IP address may **not** be activated → 44.

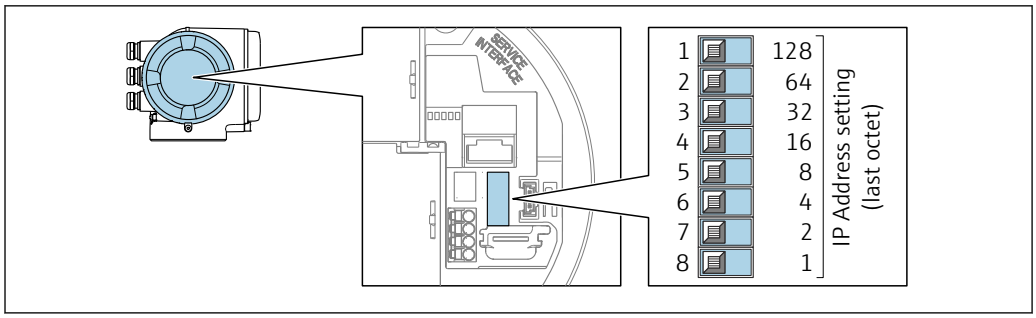

A0029635

1. Depending on the housing version, loosen the securing clamp or fixing screw of the housing cover.
2. Depending on the housing version, unscrew or open the housing cover and disconnect the local display from the main electronics module where necessary.
3. Set the desired IP address using the corresponding DIP switches on the I/O electronics module.
4. Reassemble the transmitter in the reverse order.
5. Reconnect the device to the power supply.
   ↳ The configured device address is used once the device is restarted.

7.6.2 Activating the default IP address

Activating the default IP address by DIP switch

Risk of electric shock when opening the transmitter housing.
- ▶ Before opening the transmitter housing:
- ▶ Disconnect the device from the power supply.

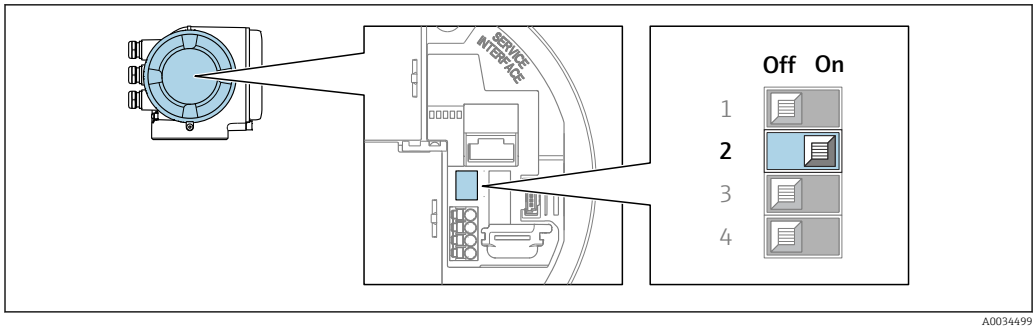

A0034499

1. Depending on the housing version, loosen the securing clamp or fixing screw of the housing cover.
2. Depending on the housing version, unscrew or open the housing cover and disconnect the local display from the main electronics module where necessary .
3. Set DIP switch no. on the I/O electronics module from **OFF** → **ON**.
4. Reassemble the transmitter in the reverse order.
5. Reconnect the device to the power supply.
   ↳ The default IP address is used once the device is restarted.

7.7 Ensuring the degree of protection

ℹ Not Type 4X if an integrated pressure measuring cell is present.

The measuring instrument fulfills all the requirements for the degree of protection IP66/67, Type 4X enclosure.

To guarantee the degree of protection IP66/67, Type 4X enclosure, carry out the following steps after the electrical connection:

1. Check that the housing seals are clean and fitted correctly.
2. Dry, clean or replace the seals if necessary.
3. Tighten all housing screws and screw covers.
4. Firmly tighten the cable glands.
5. To ensure that moisture does not enter the cable entry:
   Route the cable so that it loops down before the cable entry ("water trap").
   ↳
   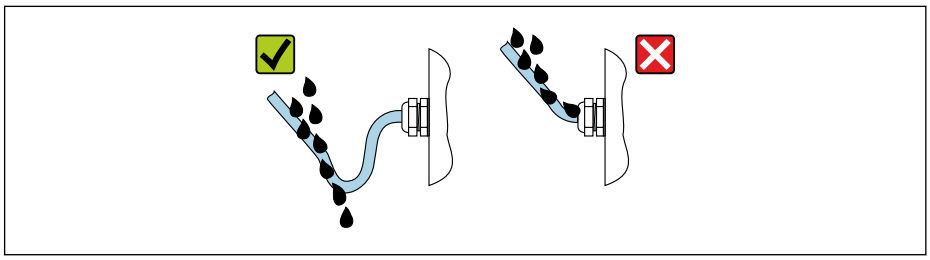
   A0029278
6. The supplied cable glands and plastic dummy plugs, which are used for the threaded cable entries, do not guarantee the degree of protection IP66/67, Type 4X enclosure. To achieve this degree of protection, cable glands and plastic dummy plugs that are not used must be replaced by threaded dummy plugs with the degree of protection IP66/67, Type 4x enclosure.

7.8 Post-connection check

Are the device and cable undamaged (visual inspection)?	❑
Is the protective earthing established correctly?	❑
Do the cables used meet the requirements ?	❑
Are the mounted cables strain-relieved and fixed securely in place?	❑
Are all cable glands installed, securely tightened and leak-tight? Cable run with "water trap" → 📄 44?	❑
Is the terminal assignment correct ?	❑
If supply voltage is present: Does anything appear on the display module screen?	❑
Are dummy plugs inserted in unused cable entries and have transportation plugs been replaced with dummy plugs?	❑

8 Operation options

8.1 Overview of operation options

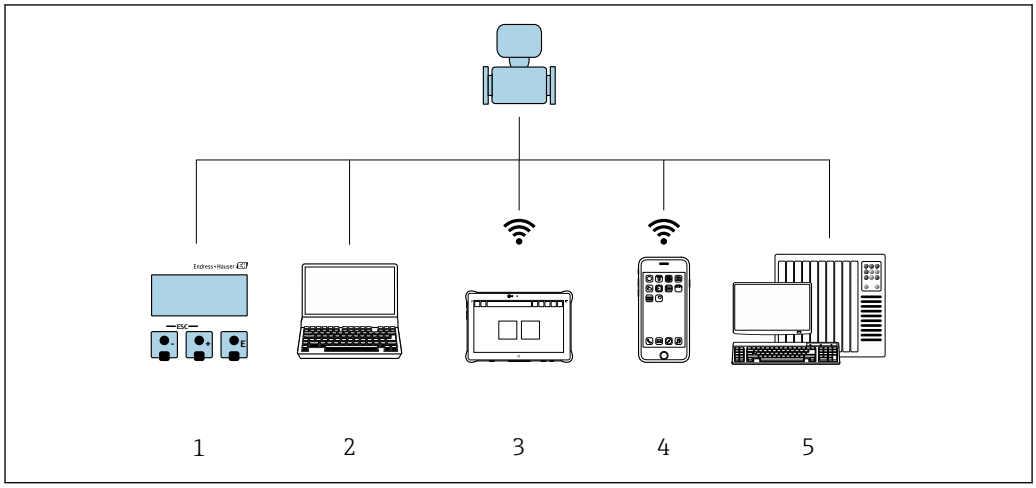

A0046226

1 *Local operation via display module*
2 *Computer with web browser or with operating tool (e.g FieldCare, DeviceCare, SIMATIC PDM)*
3 *Field Xpert SMT70*
4 *Mobile handheld terminal*
5 *Automation system (e.g. PLC)*

8.2 Structure and function of the operating menu

8.2.1 Structure of the operating menu

For an overview of the operating menu for experts: see the "Description of Device Parameters" document supplied with the device → 232

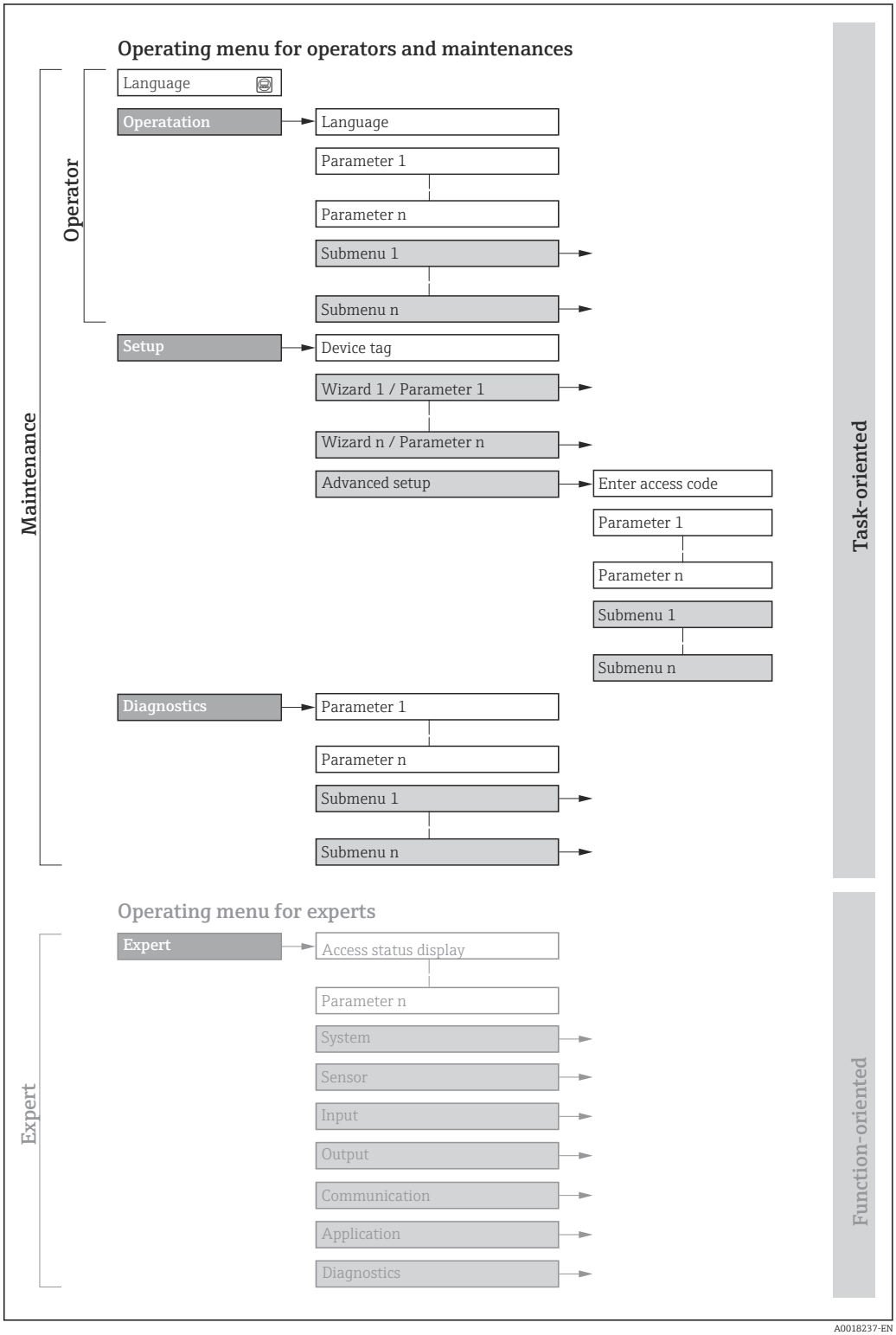

18 *Schematic structure of the operating menu*

8.2.2 Operating philosophy

The individual parts of the operating menu are assigned to certain user roles (e.g. operator, maintenance etc.). Each user role contains typical tasks within the device life cycle.

For custody transfer, once the device has been put into circulation or sealed, its operation is restricted.

Menu/parameter		User role and tasks	Content/meaning
Language	Task-oriented	**Role "Operator", "Maintenance"** Tasks during operation: ▪ Configuring the operational display ▪ Reading measured values	Defining the operating language
Operation			▪ Defining the operating language ▪ Defining the web server operating language ▪ Resetting and controlling totalizers ▪ Configuring the operational display (e.g. display format, display contrast) ▪ Resetting and controlling totalizers
Setup		**"Maintenance" role** Commissioning: ▪ Configuring the measurement ▪ Configuring the inputs and outputs ▪ Configuring the communication interface	Wizard for quick commissioning: ▪ Configuring the system units ▪ Configuring the communication interface ▪ Defining the medium ▪ Displaying the I/O configuration ▪ Configuring the inputs ▪ Configuring the outputs ▪ Configuring the operational display ▪ Configuring the low flow cut off ▪ Configuring the detection of partially filled and empty pipes Advanced setup ▪ For more customized configuration of the measurement (adaptation to special measuring conditions) ▪ Calculated process variables ▪ Sensor adjustment ▪ Configuring totalizers ▪ Configuring the display ▪ Configuring the WLAN settings ▪ Data backup ▪ Administration (define access code, reset measuring instrument)
Diagnostics		**"Maintenance" role** Troubleshooting: ▪ Diagnostics and elimination of process and device errors ▪ Measured value simulation	Contains all parameters for error detection and analyzing process and device errors: ▪ Diagnostic list Contains up to 5 currently pending diagnostic messages. ▪ Event logbook Contains event messages that have occurred. ▪ Device information Contains information for identifying the device. ▪ Measured values Contains all current measured values. ▪ **Data logging** submenu with the "Extended HistoROM" order option Storage and visualization of measured values ▪ Heartbeat Technology The functionality of the device is checked on demand and the verification results are documented. ▪ Simulation Used to simulate measured values or output values. ▪ Testpoints

Menu/parameter		User role and tasks	Content/meaning
Expert	Function-oriented	Tasks that require detailed knowledge of the function of the device: ▪ Commissioning measurements under difficult conditions ▪ Optimal adaptation of the measurement to difficult conditions ▪ Detailed configuration of the communication interface ▪ Error diagnostics in difficult cases	Contains all the parameters of the device and makes it possible to access these parameters directly using an access code. The structure of this menu is based on the function blocks of the device: ▪ System Contains all higher-level device parameters that do not affect measurement or measured value communication. ▪ Sensor Configuring the measurement. ▪ Input Configuring the status input. ▪ Output Configuring the analog current outputs as well as the pulse/frequency and switch output. ▪ Communication Configuring the digital communication interface and the web server. ▪ Application Configuring the functions that go beyond the actual measurement (e.g. totalizer). ▪ Diagnostics Error detection and analysis of process and device errors and for device simulation and the Heartbeat Technology menu.

8.3 Access to operating menu via local display

8.3.1 Operational display

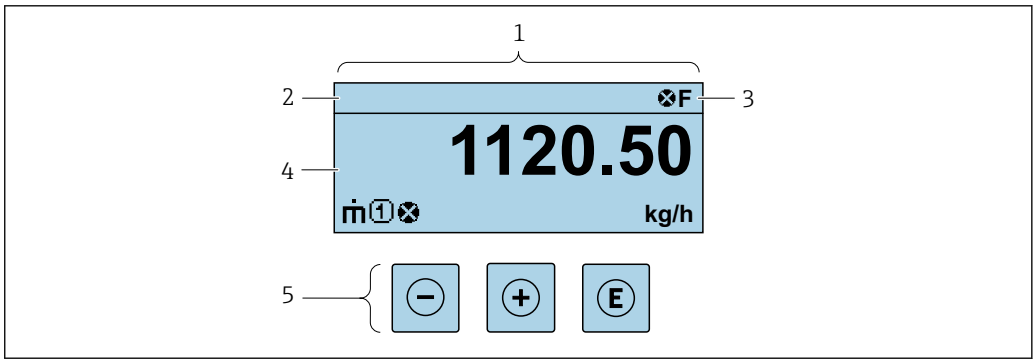

1 *Operational display*
2 *Tag name*
3 *Status area*
4 *Display area for measured values (up to 4 lines)*
5 *Operating elements* → 📄 *55*

Status area

The following symbols appear in the status area of the operational display at the top right:
- Status signals→ 📄 172
  - **F**: Failure
  - **C**: Function check
  - **S**: Out of specification
  - **M**: Maintenance required
- Diagnostic behavior→ 📄 173
  - ⊗: Alarm
  - ⚠: Warning
- 🔒: Locking (the device is locked via the hardware)
- ⇆: Communication (communication via remote operation is active)

Display area

In the display area, each measured value is prefaced by certain symbol types for further description:

Measured variables

Symbol	Meaning
$\dot{m}$	Mass flow
$\dot{V}$	▪ Volume flow ▪ Corrected volume flow
ρ	▪ Density ▪ Reference density
🌡	Temperature

The number and display format of the measured variables can be configured via the **Format display** parameter (→ 📄 105).

Totalizer

Symbol	Meaning
Σ	Totalizer The measurement channel number indicates which of the three totalizers is displayed.

Input

Symbol	Meaning
➔	Status input

Measurement channel numbers

Symbol	Meaning
1 ... 4	Measurement channel 1 to 4 The measurement channel number is displayed only if more than one channel is present for the same measured variable type (e.g. Totalizer 1 to 3).

Diagnostic behavior

Symbol	Meaning
⊗	**Alarm** ▪ Measurement is interrupted. ▪ Signal outputs and totalizers assume the defined alarm condition. ▪ A diagnostic message is generated.
⚠	**Warning** ▪ Measurement is resumed. ▪ The signal outputs and totalizers are not affected. ▪ A diagnostic message is generated.

The diagnostic behavior pertains to a diagnostic event that is relevant to the displayed measured variable.

8.3.2 Navigation view

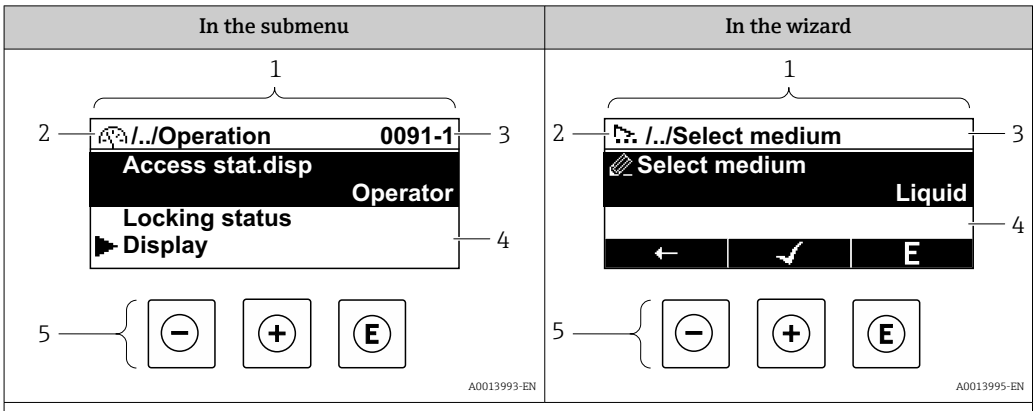

1 *Navigation view*
2 *Navigation path to current position*
3 *Status area*
4 *Display area for navigation*
5 *Operating elements* → 📄 55

Navigation path

The navigation path to the current position is displayed at the top left in the navigation view and consists of the following elements:
- The display symbol for the menu/submenu (▶) or the wizard (🧙).
- An omission symbol (/ ../) for operating menu levels in between.
- Name of the current submenu, wizard or parameter

	Display symbol	Omission symbol	Parameter
	↓	↓	↓
Example	▶	/ ../	Indication

For more information about the icons in the menu, refer to the "Display area" section → 📄 51

Status area

The following appears in the status area of the navigation view in the top right corner:
- In the submenu
  - The direct access code to the parameter (e.g., 0022-1)
  - If a diagnostic event is present, the diagnostic behavior and status signal
- In the wizard
  If a diagnostic event is present, the diagnostic behavior and status signal

- For information on the diagnostic behavior and status signal → 📄 172
- For information on the function and entry of the direct access code → 📄 57

Display area

Menus

Symbol	Meaning
	Operation Is displayed: ▪ In the menu next to the "Operation" selection ▪ At the left in the navigation path in the **Operation** menu

	Setup Is displayed: ▪ In the menu next to the "Setup" selection ▪ At the left in the navigation path in the **Setup** menu
	Diagnosis Is displayed: ▪ In the menu next to the "Diagnostics" selection ▪ At the left in the navigation path in the **Diagnostics** menu
	Expert Is displayed: ▪ In the menu next to the "Expert" selection ▪ At the left in the navigation path in the **Expert** menu

Submenus, wizards, parameters

Symbol	Meaning
	Submenu
	Wizards
	Parameters within a wizard No display symbol exists for parameters in submenus.

Locking procedure

Symbol	Meaning
	Parameter locked When displayed in front of a parameter name, indicates that the parameter is locked. ▪ By a user-specific access code ▪ By the hardware write protection switch

Wizards

Symbol	Meaning
	Switches to the previous parameter.
	Confirms the parameter value and switches to the next parameter.
E	Opens the editing view of the parameter.

8.3.3 Editing view

Numeric editor

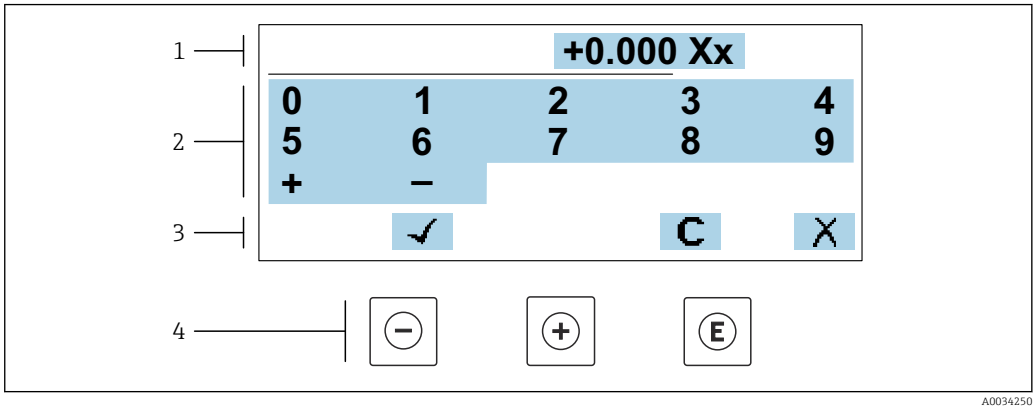

19 *For entering values in parameters (e.g. limit values)*

1 *Entry display area*
2 *Input screen*
3 *Confirm, delete or reject entry*
4 *Operating elements*

Text editor

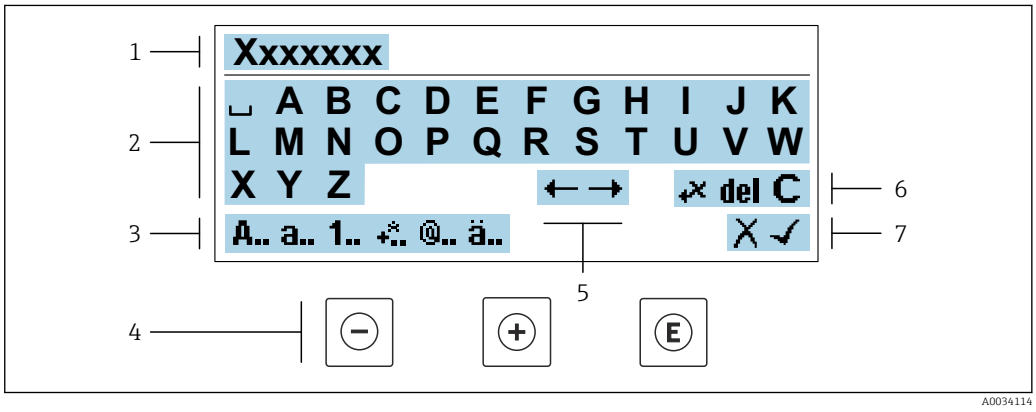

20 *For entering text in parameters (e.g. device tag)*

1 *Entry display area*
2 *Current input screen*
3 *Change input screen*
4 *Operating elements*
5 *Move entry position*
6 *Delete entry*
7 *Reject or confirm entry*

Using the operating elements in the editing view

Operating key	Meaning
⊖	**Minus key** Move the entry position to the left.
⊕	**Plus key** Move the entry position to the right.

Operating key	Meaning
E	**Enter key** ▪ Pressing the key briefly confirms your selection. ▪ Pressing the key for 2 s confirms your entry.
− +	**Escape key combination (press keys simultaneously)** Close the editing view without accepting a change.

Input screens

Symbol	Meaning
A..	Upper case
a..	Lower case
1..	Numbers
+..	Punctuation marks and special characters: = + − * / ² ³ ¼ ½ ¾ ( ) [ ] < > { }
@..	Punctuation marks and special characters: ' " ` ^ . , ; : ? ! % µ ° € $ £ ¥ § @ # / \ I ~ & _
ä..	Umlauts and accents

Controlling data entries

Symbol	Meaning
←→	Move entry position
✕	Reject entry
✓	Confirm entry
←✕	Delete character immediately to the left of the entry position
del	Delete character immediately to the right of the entry position
C	Clear all the characters entered

8.3.4 Operating elements

Operating key	Meaning
⊖	**Minus key** *In menu, submenu* Moves the selection bar upwards in a picklist *In wizards* Goes to previous parameter *In the text and numeric editor* Move the entry position to the left.
⊕	**Plus key** *In menu, submenu* Moves the selection bar downwards in a picklist *In wizards* Goes to the next parameter *In the text and numeric editor* Move the entry position to the right.

E	**Enter key**
	In the operational display
	Pressing the key briefly opens the operating menu.
	In menu, submenu
	▪ Pressing the key briefly:
	  ▪ Opens the selected menu, submenu or parameter.
	  ▪ Starts the wizard.
	  ▪ If help text is open, closes the help text of the parameter.
	▪ Pressing the key for 2 s in a parameter:
	  If present, opens the help text for the function of the parameter.
	In wizards
	Opens the editing view of the parameter and confirms the parameter value
	In the text and numeric editor
	▪ Pressing the key briefly confirms your selection.
	▪ Pressing the key for 2 s confirms your entry.

⊖ + ⊕	**Escape key combination (press keys simultaneously)**
	In menu, submenu
	▪ Pressing the key briefly:
	  ▪ Exits the current menu level and takes you to the next higher level.
	  ▪ If help text is open, closes the help text of the parameter.
	▪ Pressing the key for 2 s returns you to the operational display ("home position").
	In wizards
	Exits the wizard and takes you to the next higher level
	In the text and numeric editor
	Exits the Editing view without applying the changes.

⊖ + E	**Minus/Enter key combination (press and hold down the keys simultaneously)**
	▪ If keypad lock is active:
	  Pressing the key for 3 s deactivates the keypad lock.
	▪ If keypad lock is not active:
	  Pressing the key for 3 s opens the context menu including the option for activating the keypad lock.

8.3.5 Opening the context menu

Using the context menu, the user can call up the following menus quickly and directly from the operational display:

- Setup
- Data backup
- Simulation

Calling up and closing the context menu

The user is in the operational display.

1. Press the ⊟ and Ⓔ keys for longer than 3 seconds.
   ↳ The context menu opens.

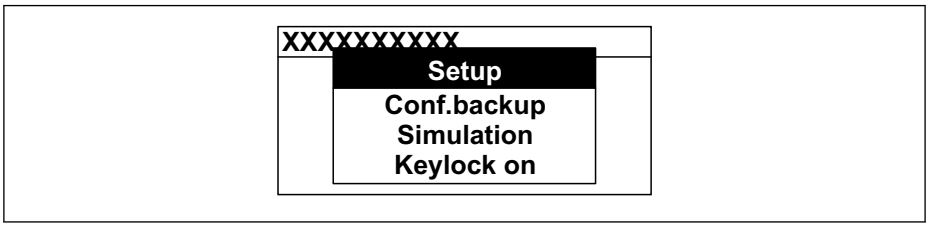

A0034608-EN

2. Press ⊟ + ⊞ simultaneously.
   ↳ The context menu is closed and the operational display appears.

Calling up the menu via the context menu

1. Open the context menu.
2. Press ⊞ to navigate to the desired menu.
3. Press Ⓔ to confirm the selection.
   ↳ The selected menu opens.

8.3.6 Navigating and selecting from list

Different operating elements are used to navigate through the operating menu. The navigation path is displayed on the left in the header. Icons are displayed in front of the individual menus. These icons are also shown in the header during navigation.

For an explanation of the navigation view with symbols and operating elements → 51

Example: Setting the number of displayed measured values to "2 values"

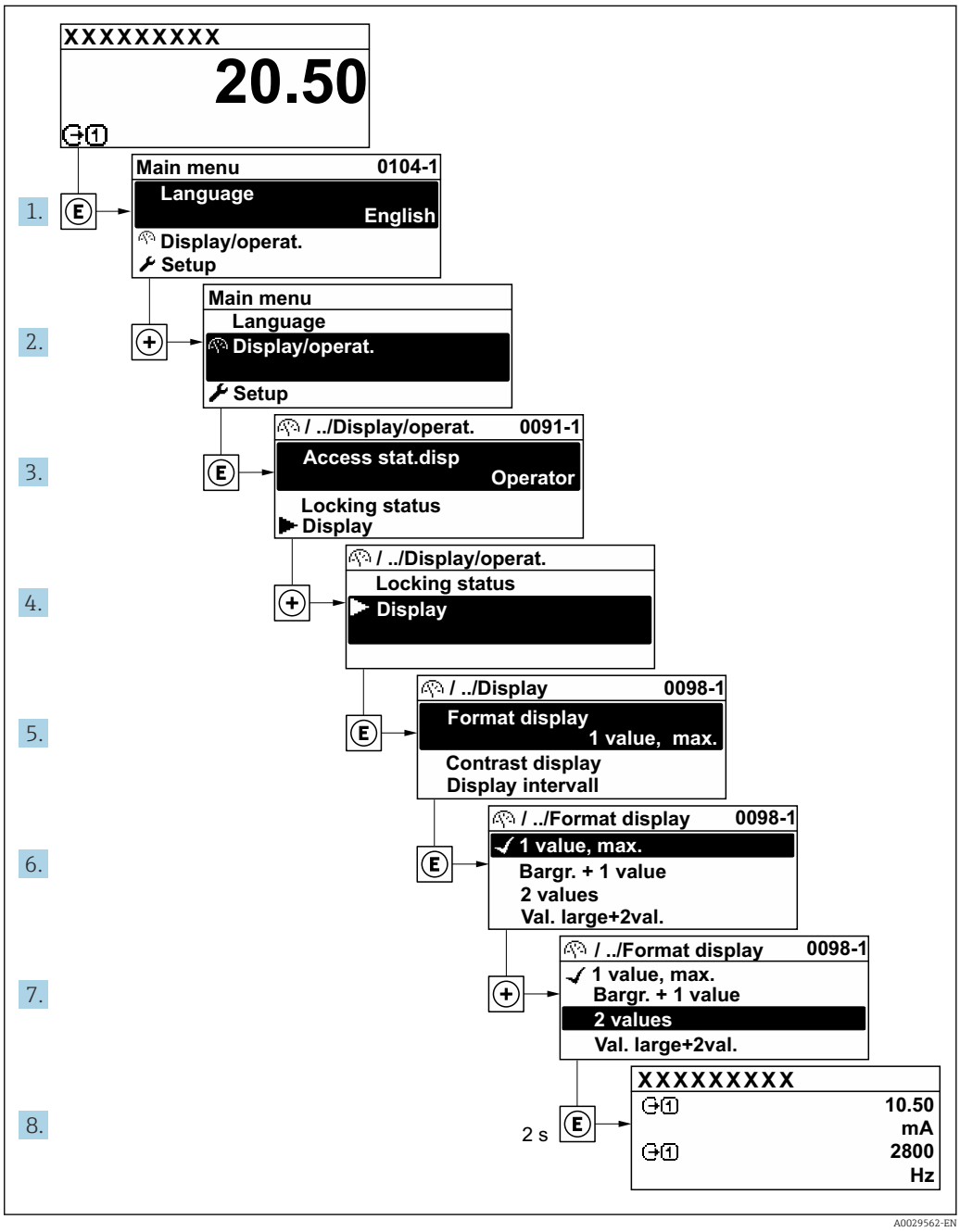

8.3.7 Calling the parameter directly

A parameter number is assigned to every parameter to be able to access a parameter directly via the onsite display. Entering this access code in the **Direct access** parameter calls up the desired parameter directly.

Navigation path
Expert → Direct access

The direct access code consists of a 5-digit number (at maximum) and the channel number, which identifies the channel of a process variable: e.g. 00914-2. In the navigation view, this appears on the right-hand side in the header of the selected parameter.

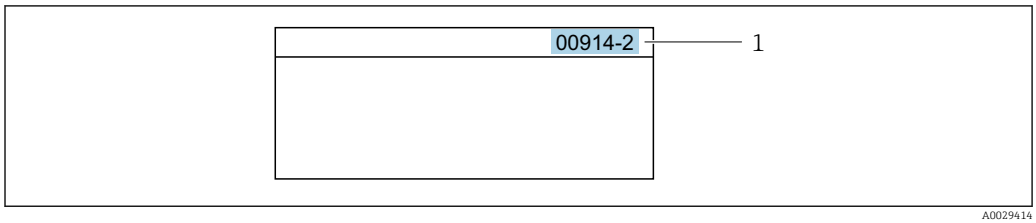

1 Direct access code

Note the following when entering the direct access code:
- The leading zeros in the direct access code do not have to be entered.
  Example: Enter **"914"** instead of **"00914"**
- If no channel number is entered, channel 1 is opened automatically.
  Example: Enter **00914** → **Assign process variable** parameter
- If a different channel is opened: Enter the direct access code with the corresponding channel number.
  Example: Enter **00914-2** → **Assign process variable** parameter

For the direct access codes of the individual parameters, see the "Description of Device Parameters" document for the device

8.3.8 Calling up help text

Help text is available for some parameters and can be called up from the navigation view. The help text provides a brief explanation of the parameter function and thereby supports swift and safe commissioning.

Calling up and closing the help text

The user is in the navigation view and the selection bar is on a parameter.

1. Press E for 2 s.
   ↳ The help text for the selected parameter opens.

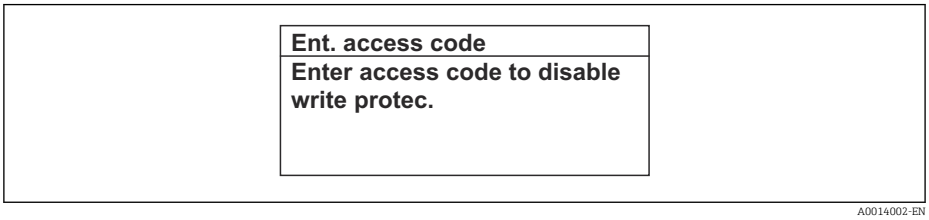

21 Example: Help text for parameter "Enter access code"

2. Press − + + simultaneously.
   ↳ The help text is closed.

8.3.9 Changing the parameters

Parameters can be changed via the numeric editor or text editor.
- Numeric editor: Change values in a parameter, e.g. specifications for limit values.
- Text editor: Enter text in a parameter, e.g. tag name.

A message is displayed if the value entered is outside the permitted value range.

Ent. access code
Invalid or out of range input value Min:0 Max:9999

A0014049-EN

For a description of the editing view - consisting of the text editor and numeric editor - with symbols → 53, for a description of the operating elements → 55

8.3.10 User roles and related access authorization

The two user roles "Operator" and "Maintenance" have different write access to the parameters if the customer defines a user-specific access code. This protects the device configuration via the local display from unauthorized access → 143.

Defining access authorization for user roles

An access code is not yet defined when the device is delivered from the factory. Access authorization (read and write access) to the device is not restricted and corresponds to the "Maintenance" user role.

- Define the access code.
  - The "Operator" user role is redefined in addition to the "Maintenance" user role. Access authorization differs for the two user roles.

Access authorization to parameters: "Maintenance" user role

Access code status	Read access	Write access
An access code has not yet been defined (factory setting).	✔	✔
After an access code has been defined.	✔	✔ [1]

1) The user only has write access after entering the access code.

Access authorization to parameters: "Operator" user role

Access code status	Read access	Write access
After an access code has been defined.	✔	– [1]

1) Despite the defined access code, certain parameters can always be modified and thus are excluded from the write protection as they do not affect the measurement: write protection via access code → 143

The user role with which the user is currently logged on is indicated by the **Access status** parameter. Navigation path: Operation → Access status

8.3.11 Disabling write protection via access code

If the 🔒-symbol appears on the local display in front of a parameter, the parameter is write-protected by a user-specific access code and its value cannot be changed at the moment using local operation → 143.

Parameter write protection via local operation can be disabled by entering the user-specific access code in the **Enter access code** parameter (→ 111) via the respective access option.

1. After you press E, the input prompt for the access code appears.

2. Enter the access code.
   ↳ The 🔒-symbol in front of the parameters disappears; all previously write-protected parameters are now re-enabled.

8.3.12 Enabling and disabling the keypad lock

The keypad lock makes it possible to block access to the entire operating menu via local operation. As a result, it is no longer possible to navigate through the operating menu or change the values of individual parameters. Users can only read the measured values on the operational display.

The keypad lock is switched on and off via the context menu.

Switching on the keypad lock

The keypad lock is switched on automatically:
- If the device has not been operated via the display for > 1 minute.
- Each time the device is restarted.

To activate the keylock manually:

1. The device is in the measured value display.
   Press the ⊟ and Ⓔ keys for 3 seconds.
   ↳ A context menu appears.
2. In the context menu select the **Keylock on** option.
   ↳ The keypad lock is switched on.

If the user attempts to access the operating menu while the keypad lock is active, the **Keylock on** message appears.

Switching off the keypad lock

- The keypad lock is switched on.
  Press the ⊟ and Ⓔ keys for 3 seconds.
  ↳ The keypad lock is switched off.

8.4 Access to operating menu via web browser

8.4.1 Function scope

The integrated web server can be used to operate and configure the device via a web browser via Ethernet-APL, service interface (CDI) or via WLAN interface . The structure of the operating menu is the same as for the local display. In addition to the measured values, status information on the device is displayed and can be used to monitor device health. Furthermore the device data can be managed and the network parameters can be configured.

A device that has a WLAN interface (can be ordered as an option) is required for the WLAN connection: order code for "Display; Operation", option G "4-line, illuminated; touch control + WLAN". The device acts as an Access Point and enables communication by computer or a mobile handheld terminal.

For additional information on the web server, see the Special Documentation for the device. → 📖 233

8.4.2 Requirements

Computer hardware

Hardware	Interface	
	RJ45	WLAN
Interface	The computer must have a RJ45 interface. [1]	The operating unit must have a WLAN interface.
Connection		Connection via wireless local area network.
Screen	Recommended size: ≥12" (depends on the screen resolution)	

1) Recommended cable: CAT5e, CAT6 or CAT7, with shielded plug (e.g. YAMAICHI product; part no. Y-ConProfixPlug63/Prod. ID: 82-006660)

Computer software

Software	Interface	
	RJ45	WLAN
Recommended operating systems	▪ Microsoft Windows 8 or higher. ▪ Mobile operating systems: ▪ iOS ▪ Android Microsoft Windows XP and Windows 7 is supported.	
Web browsers supported	▪ Microsoft Edge ▪ Mozilla Firefox ▪ Google Chrome ▪ Safari	

Computer settings

Settings	Interface	
	RJ45	WLAN
User rights	Appropriate user rights (e.g. administrator rights) for TCP/IP and proxy server settings are necessary (e.g. for adjusting the IP address, subnet mask etc.).	
Proxy server settings of the web browser	The web browser's *Use a Proxy Server for Your LAN* setting must be **deselected** .	
JavaScript	JavaScript must be enabled. If JavaScript cannot be enabled: Enter http://192.168.1.212/servlet/basic.html in the address bar of the web browser. A fully functional but simplified version of the operating menu structure starts in the web browser. When installing a new firmware version: To enable correct data display, clear the temporary memory (cache) under **Internet options** in the web browser.	JavaScript must be enabled. The WLAN display requires JavaScript support.
Network connections	Use only the active network connections for the measuring instrument.	
	Switch off all other network connections such as WLAN for example.	Switch off all other network connections.

In the event of connection problems: → 170

Measuring device: Via CDI-RJ45 service interface

Device	CDI-RJ45 service interface
Measuring device	The measuring device has an RJ45 interface.
Web server	Web server must be enabled; factory setting: ON For information on enabling the Web server → 66

Measuring device: via WLAN interface

Device	WLAN interface
Measuring device	The measuring device has a WLAN antenna: ▪ Transmitter with integrated WLAN antenna ▪ Transmitter with external WLAN antenna
Web server	Web server and WLAN must be enabled; factory setting: ON For information on enabling the Web server → 66

8.4.3 Connection setup

Via service interface (CDI-RJ45)

Preparing the measuring device

1. Depending on the housing version:
   Loosen the securing clamp or fixing screw of the housing cover.
2. Depending on the housing version:
   Unscrew or open the housing cover.
3. Connect the computer to the RJ45 plug via the standard Ethernet connecting cable..

Configuring the Internet protocol of the computer

1. Switch on the measuring device.
2. Connect the computer to the RJ45 plug via the standard Ethernet cable → 69.
3. If a 2nd network card is not used, close all the applications on the notebook.
   ↳ Applications requiring Internet or a network, such as e-mail, SAP applications, Internet or Windows Explorer.
4. Close any open Internet browsers.
5. Configure the properties of the Internet protocol (TCP/IP) as defined in the table:

IP address	192.168.1.XXX; for XXX all numerical sequences except: 0, 212 and 255 → e.g. 192.168.1.213
Subnet mask	255.255.255.0
Default gateway	192.168.1.212 or leave cells empty

Via WLAN interface

Configuring the Internet protocol of the mobile device

NOTICE

If the WLAN connection is lost during the configuration, settings made may be lost.

▶ Make sure that the WLAN connection is not disconnected while configuring the device.

NOTICE

Please note the following to avoid a network conflict:

- Avoid accessing the measuring instrument simultaneously from the same mobile device via the service interface (CDI-RJ45) and the WLAN interface.
- Only activate one service interface (CDI-RJ45 or WLAN interface).
- If simultaneous communication is necessary: configure different IP address ranges, e.g. 192.168.0.1 (WLAN interface) and 192.168.1.212 (CDI-RJ45 service interface).

Preparing the mobile terminal

- Enable WLAN on the mobile terminal.

Establishing a WLAN connection from the mobile terminal to the measuring device

1. In the WLAN settings of the mobile terminal:
   Select the measuring device using the SSID (e.g. EH_Promass_300_A802000).
2. If necessary, select the WPA2 encryption method.
3. Enter the password:
   Serial number of the measuring device ex-works (e.g. L100A802000).
   ↳ The LED on the display module flashes. It is now possible to operate the measuring device with the web browser, FieldCare or DeviceCare.

The serial number can be found on the nameplate.

To ensure the safe and swift assignment of the WLAN network to the measuring point, it is advisable to change the SSID name. It should be possible to clearly assign the new SSID name to the measuring point (e.g. tag name) because it is displayed as the WLAN network.

Terminating the WLAN connection

- After configuring the device:
  Terminate the WLAN connection between the mobile terminal and measuring device.

Starting the web browser

1. Start the web browser on the computer.

2. Enter the IP address of the web server in the address line of the web browser: 192.168.1.212
   ↳ The login page appears.

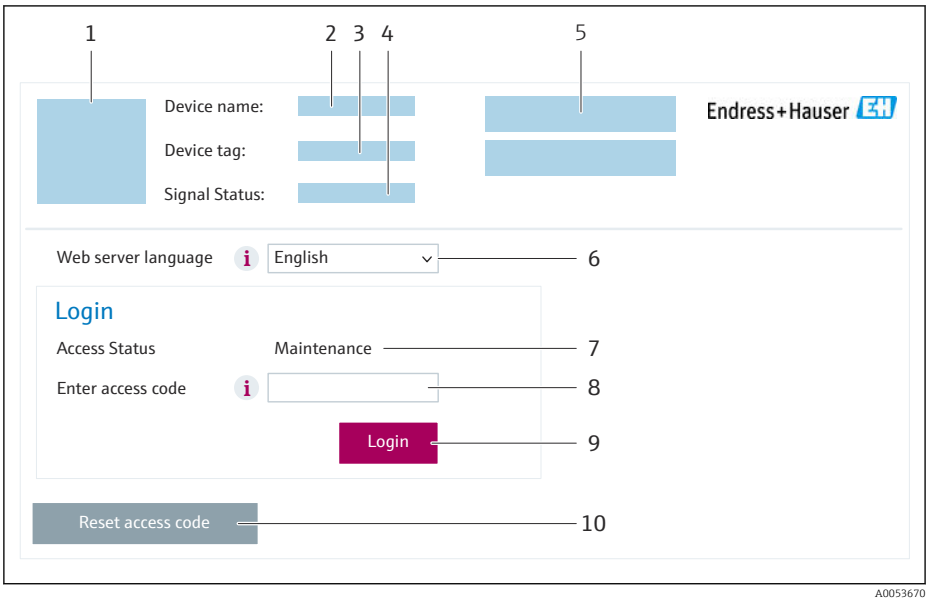

1 *Picture of device*
2 *Device name*
3 *Device tag*
4 *Status signal*
5 *Current measured values*
6 *Operating language*
7 *User role*
8 *Access code*
9 *Login*
10 *Reset access code (→ 137)*

If a login page does not appear, or if the page is incomplete → 170

8.4.4 Logging on

1. Select the preferred operating language for the Web browser.
2. Enter the user-specific access code.
3. Press **OK** to confirm your entry.

Access code	0000 (factory setting); can be changed by customer

If no action is performed for 10 minutes, the Web browser automatically returns to the login page.

8.4.5 User interface

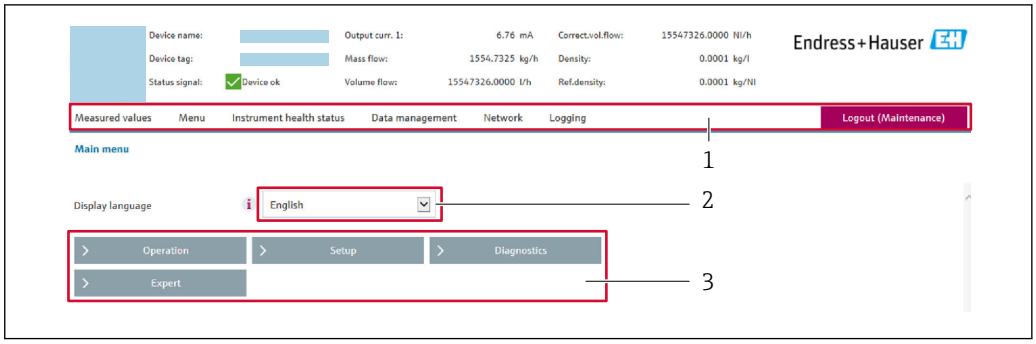

A0029418

1 *Function row*
2 *Local display language*
3 *Navigation area*

Header

The following information appears in the header:
- Device name
- Device tag
- Device status with status signal → 📄 175
- Current measured values

Function row

Functions	Meaning
Measured values	Displays the measured values of the measuring instrument
Menu	▪ Access to the operating menu from the measuring instrument ▪ The structure of the operating menu is the same as for the local display 📖 Detailed information on the "Description of Device Parameters" operating menu
Device status	Displays the diagnostic messages currently pending, listed in order of priority

Data management	Data exchange between computer and measuring instrument:
	▪ Device configuration:
	  ▪ Load settings from the device (XML format, save configuration)
	  ▪ Save settings to the device (XML format, restore configuration)
	▪ Logbook - Export Event logbook (.csv file)
	▪ Documents - Export documents:
	  ▪ Export backup data record (.csv file, create documentation of the measuring point configuration)
	  ▪ Verification report (PDF file, only available with the "Heartbeat Verification" module)
	▪ Firmware update - Flashing a firmware version

Network	Configuration and checking of all the parameters required for establishing the connection to the measuring instrument: ▪ Network settings (e.g. IP address, MAC address) ▪ Device information (e.g. serial number, firmware version)
Logout	End the operation and call up the login page

Navigation area

The menus, the associated submenus and parameters can be selected in the navigation area.

Working area

Depending on the selected function and the related submenus, various actions can be performed in this area:
- Configuring parameters
- Reading measured values
- Calling up help text
- Starting an upload/download

8.4.6 Disabling the Web server

The Web server of the measuring device can be switched on and off as required using the **Web server functionality** parameter.

Navigation

"Expert" menu → Communication → Web server

Parameter overview with brief description

Parameter	Description	Selection	Factory setting
Web server functionality	Switch the Web server on and off.	▪ Off ▪ HTML Off ▪ On	On

Function scope of the "Web server functionality" parameter

Option	Description
Off	▪ The Web server is completely disabled. ▪ Port 80 is locked.
HTML Off	The HTML version of the Web server is not available.
On	▪ The complete Web server functionality is available. ▪ JavaScript is used. ▪ The password is transferred in an encrypted state. ▪ Any change to the password is also transferred in an encrypted state.

Enabling the Web server

If the Web server is disabled it can only be re-enabled with the **Web server functionality** parameter via the following operating options:
- Via local display
- Via Bedientool "FieldCare"
- Via "DeviceCare" operating tool

8.4.7 Logging out

Before logging out, perform a data backup via the **Data management** function (upload configuration from device) if necessary.

1. Select the **Logout** entry in the function row.
   ↳ The home page with the Login box appears.
2. Close the Web browser.
3. If no longer needed:
   Reset the modified properties of the Internet protocol (TCP/IP) → 🗎 62.

8.5 Operation via the SmartBlue app

The device can be operated and configured with the SmartBlue App.

- The SmartBlue App must be downloaded onto a mobile device for this purpose
- For information on the compatibility of the SmartBlue App with mobile devices, see **Apple App Store (iOS devices)** or **Google Play Store (Android devices)**
- Incorrect operation by unauthorized persons is prevented by means of encrypted communication and password encryption
- The Bluetooth® function can be deactivated after initial device setup

A0033202

22 QR code for free Endress+Hauser SmartBlue App

Download and installation:

1. Scan the QR code or enter **SmartBlue** in the search field of the Apple App Store (iOS) or Google Play Store (Android).
2. Install and start the SmartBlue app.
3. For Android devices: enable location tracking (GPS) (not required for iOS devices).
4. Select a device that is ready to receive from the device list displayed.

Login:

1. Enter the user name: admin
2. Enter the initial password: serial number of the device
3. Change the password after logging in for the first time

Notes on the password and reset code

- If the user-defined password is lost, access can be restored via a reset code. The reset code is the serial number of the device in reverse. The original password is once again valid after the reset code has been entered.
- The reset code can also be changed in addition to the password.
- If the user-defined reset code is lost, the password can no longer be reset via the SmartBlue app. Contact Endress+Hauser Service in this case.

8.6 Access to the operating menu via the operating tool

The structure of the operating menu in the operating tools is the same as for operation via the local display.

8.6.1 Connecting the operating tool

Via Modbus TCP over Ethernet-APL 10 Mbit/s, SPE 10 Mbit/s

This communication interface is available on port 1 in device versions with a Modbus TCP over Ethernet-APL output.

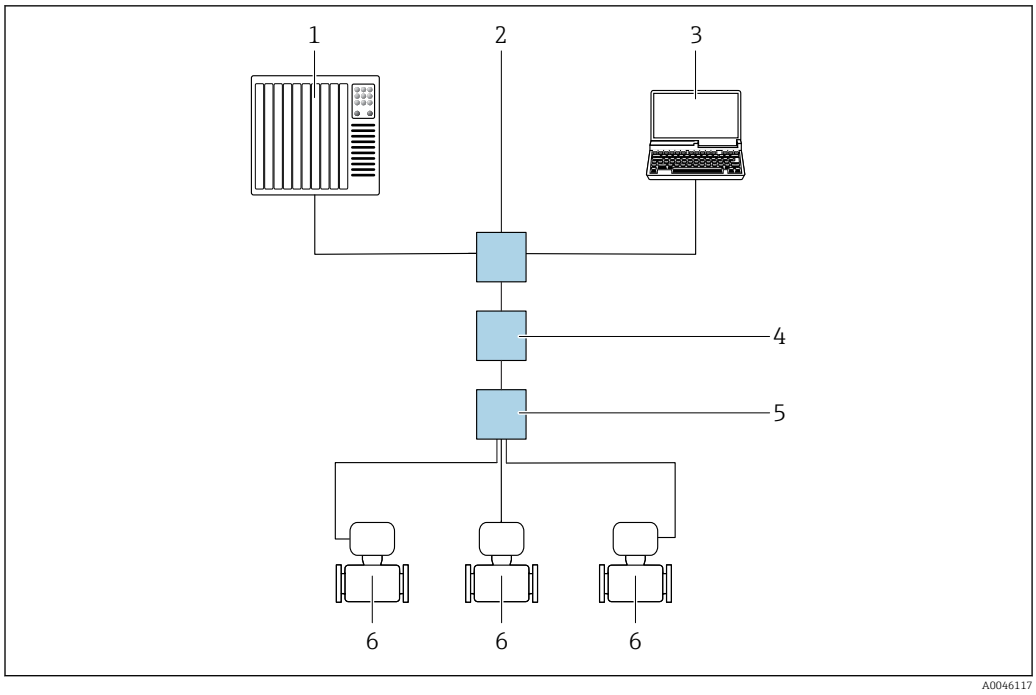

23 Options for remote operation via Modbus TCP over Ethernet-APL protocol (active)

1 *Automation system, e.g. Simatic S7 (Siemens)*
2 *Ethernet switch, e.g. Scalance X204 (Siemens)*
3 *Computer with web browser or operating tool*
4 *APL power switch/SPE power switch (optional)*
5 *APL field switch/SPE field switch*
6 *Measuring instrument/communication via port 1 (terminal 26 + 27)*

Via Modbus TCP over Ethernet 100 Mbit/s

This communication interface is available on port 2 in device versions with a Modbus TCP over Ethernet-APL output.

Star topology

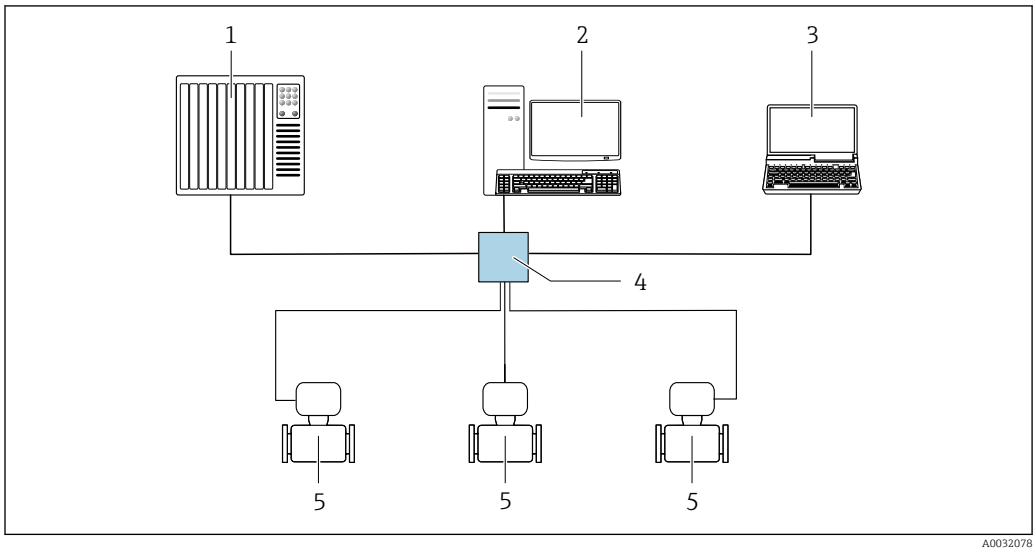

24 Options for remote operation via Modbus TCP over Ethernet - 100 Mbit/s: Star topology

1 *Automation system, z. B. RSLogix (Rockwell Automation)*
2 *Workstation for measuring instrument operation: with Custom Add-On Profile for "RSLogix 5000" (Rockwell Automation) or with Electronic Data Sheet (EDS)*
3 *Computer with web browser or operating tool*
4 *Standard Ethernet switch, e.g. Stratix (Rockwell Automation)*
5 *Measuring instrument/communication via port 2 (RJ45 connector)*

Service interface

Via service interface (CDI-RJ45)

To configure the device on site, a point-to-point connection can be established. Alternatively, a connection via Modbus TCP can be used.The connection is made with the housing open, directly via the device's service interface (CDI-RJ45).

An adapter for the RJ45 to the M12 plug is optionally available for the non-hazardous area:

Order code for "Accessories", option **NB**: "Adapter RJ45 M12 (service interface)"

The adapter connects the service interface (CDI-RJ45) to an M12 plug mounted in the cable entry. The connection to the service interface can be established via an M12 plug without opening the device.

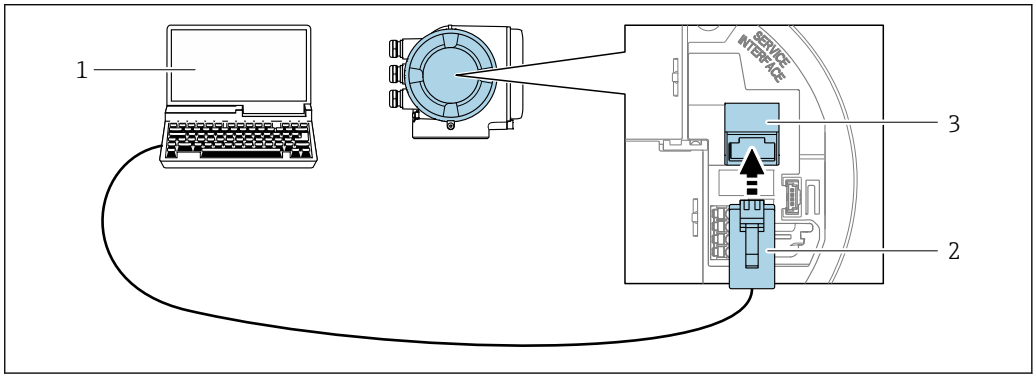

25 *Connection via service interface (CDI-RJ45)*

1 *Computer with web browseror operating tool*
2 *Standard Ethernet connecting cable with RJ45 connector*
3 *Service interface (CDI-RJ45) of the measuring instrument with access to the integrated web server*

Via WLAN interface

The optional WLAN interface is available on the following device version:
Order code for "Display; operation", option G "4-line, illuminated; touch control + WLAN"

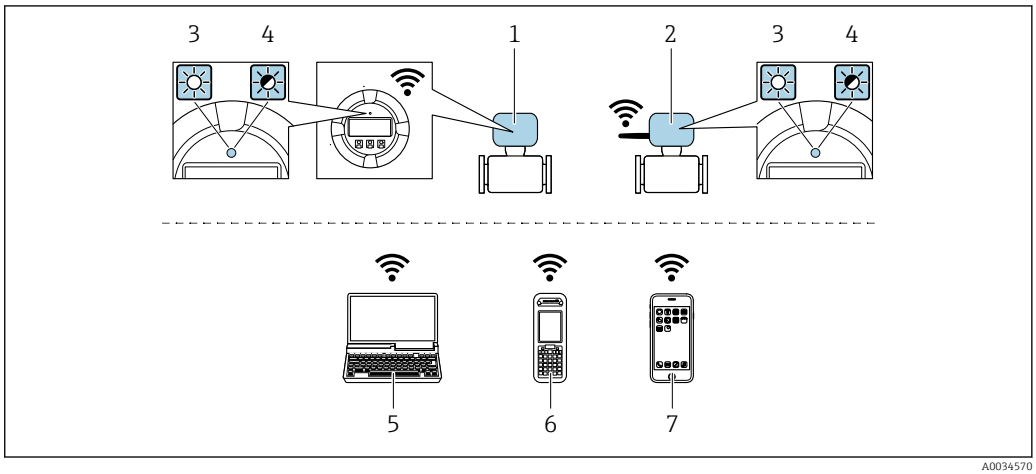

1 *Transmitter with integrated WLAN antenna*
2 *Transmitter with external WLAN antenna*
3 *LED lit constantly: WLAN reception is enabled on measuring instrument*
4 *LED flashing: WLAN connection established between operating unit and measuring instrument*
5 *Computer with WLAN interface and web browser for accessing integrated device web server or with operating tool. e.g FieldCare, DeviceCare)*
6 *Mobiles handheld terminal with WLAN interface and web browser for accessing integrated device web server or operating tool (e.g. FieldCare, DeviceCare)*
7 *Smartphone or tablet (e.g. Field Xpert SMT70)*

Encryption	WPA2-PSK AES-128 (in accordance with IEEE 802.11i)
Configurable WLAN channels	1 to 11
Degree of protection	IP66/67
Available antennas	▪ Internal antenna ▪ External antenna (optional) In the event of poor transmission/reception conditions at the place of installation. Only 1 antenna is active at any one time!
Range	▪ Internal antenna: typically 10 m (32 ft) ▪ External antenna: typically 50 m (164 ft)
Materials (external antenna)	▪ Antenna: ASA plastic (acrylonitrile styrene acrylate) and nickel-plated brass ▪ Adapter: Stainless steel and nickel-plated brass ▪ Cable: Polyethylene ▪ Plug: Nickel-plated brass ▪ Angle bracket: Stainless steel

Configuring the Internet protocol of the mobile device

NOTICE

If the WLAN connection is lost during the configuration, settings made may be lost.

▶ Make sure that the WLAN connection is not disconnected while configuring the device.

NOTICE

Please note the following to avoid a network conflict:

▶ Avoid accessing the measuring instrument simultaneously from the same mobile device via the service interface (CDI-RJ45) and the WLAN interface.
▶ Only activate one service interface (CDI-RJ45 or WLAN interface).
▶ If simultaneous communication is necessary: configure different IP address ranges, e.g. 192.168.0.1 (WLAN interface) and 192.168.1.212 (CDI-RJ45 service interface).

Preparing the mobile terminal

▶ Enable WLAN on the mobile terminal.

Establishing a WLAN connection from the mobile terminal to the measuring device

1. In the WLAN settings of the mobile terminal:
   Select the measuring device using the SSID (e.g. EH_Promass_300_A802000).
2. If necessary, select the WPA2 encryption method.
3. Enter the password:
   Serial number of the measuring device ex-works (e.g. L100A802000).
   ↳ The LED on the display module flashes. It is now possible to operate the measuring device with the web browser, FieldCare or DeviceCare.

The serial number can be found on the nameplate.

To ensure the safe and swift assignment of the WLAN network to the measuring point, it is advisable to change the SSID name. It should be possible to clearly assign the new SSID name to the measuring point (e.g. tag name) because it is displayed as the WLAN network.

Terminating the WLAN connection

▶ After configuring the device:
Terminate the WLAN connection between the mobile terminal and measuring device.

8.6.2 FieldCare

Function range

FDT-based (Field Device Technology) plant asset management tool from Endress+Hauser. It can configure all smart field units in a system and helps you manage them. By using the status information, it is also a simple but effective way of checking their status and condition.

Access is via:
- CDI-RJ45 service interface → 69
- WLAN interface → 69

Typical functions:
- Transmitter parameter configuration
- Loading and saving of device data (upload/download)
- Documentation of the measuring point
- Visualization of the measured value memory (line recorder) and event logbook

- Operating Instructions BA00027S
- Operating Instructions BA00059S

Source for device description files → 73

Establishing a connection

- Operating Instructions BA00027S
- Operating Instructions BA00059S

User interface

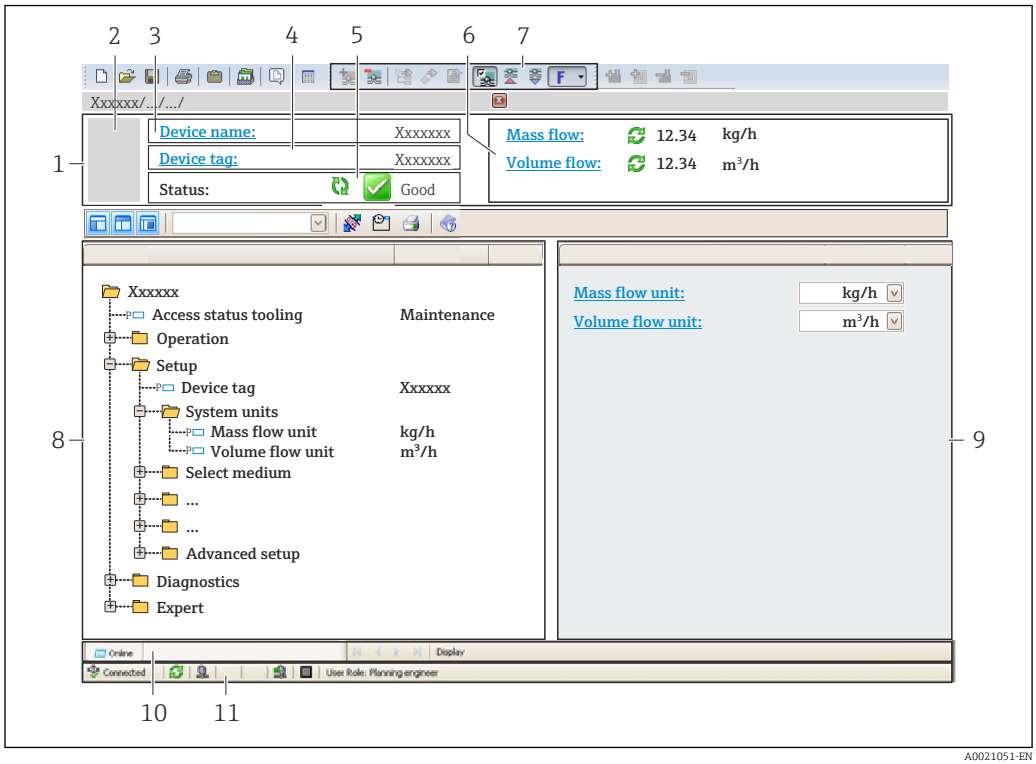

A0021051-EN

1 *Header*
2 *Picture of device*
3 *Device name*
4 *Tag name*
5 *Status area with status signal* → 📄 *175*
6 *Display area for current measured values*
7 *Editing toolbar with additional functions such as save/load, event list and create documentation*
8 *Navigation area with operating menu structure*
9 *Work area*
10 *Action area*
11 *Status area*

8.6.3 DeviceCare

Function range

Tool for connecting and configuring Endress+Hauser field devices.

The fastest way to configure Endress+Hauser field devices is with the dedicated "DeviceCare" tool. Together with the device type managers (DTMs) it presents a convenient, comprehensive solution.

Innovation brochure IN01047S

Source for device description files → 📄 73

9 System integration

9.1 Overview of device description files

9.1.1 Current version data for the device

Firmware version	01.00.zz	▪ On the title page of the manual ▪ On the transmitter nameplate ▪ Firmware version Diagnostics → Device information → Firmware version

For an overview of the various firmware versions for the device
→ 📄 189

9.1.2 Operating tools

The suitable device description file for the individual operating tools is listed in the table below, along with information on where the file can be acquired.

FieldCare	▪ www.endress.com → Downloads area ▪ USB stick (contact Endress+Hauser) ▪ E-mail → Downloads area
DeviceCare	▪ www.endress.com → Downloads area ▪ E-mail → Downloads area

9.2 Modbus TCP system integration

For detailed information on system integration, see the Special Documentation on Modbus TCP system integration for the device:
→ 📄 233

10 Commissioning

10.1 Post-mounting and post-connection check

Before commissioning the device:

- Make sure that the post-installation and post-connection checks have been performed successfully.

- Checklist for "Post-mounting" check→ 📄 31
- Checklist for "Post-connection check" → 📄 45

10.2 Switching on the measuring device

- Switch on the device upon successful completion of the post-mounting and post-connection check.
  - ↳ After a successful startup, the local display switches automatically from the startup display to the operational display.

ℹ If nothing appears on the local display or if a diagnostic message is displayed, refer to the section on "Diagnostics and troubleshooting" → 📄 169.

10.3 Setting the operating language

Factory setting: English or ordered local language

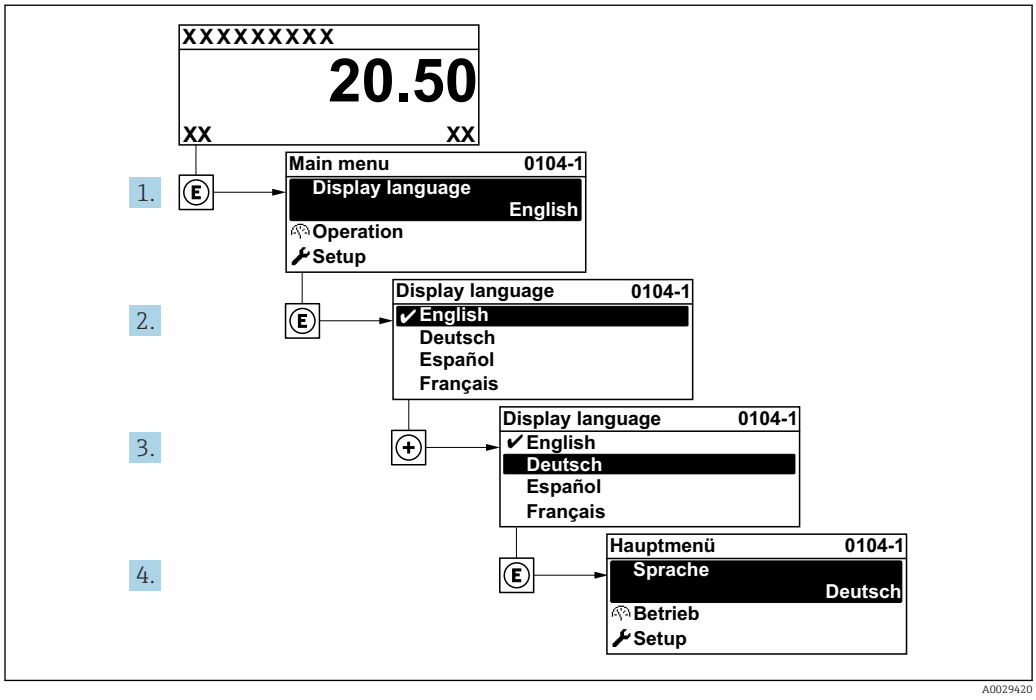

26 *Taking the example of the local display*

10.4 Configuring the device

The **Setup** menu with its guided wizards contains all the parameters needed for standard operation.

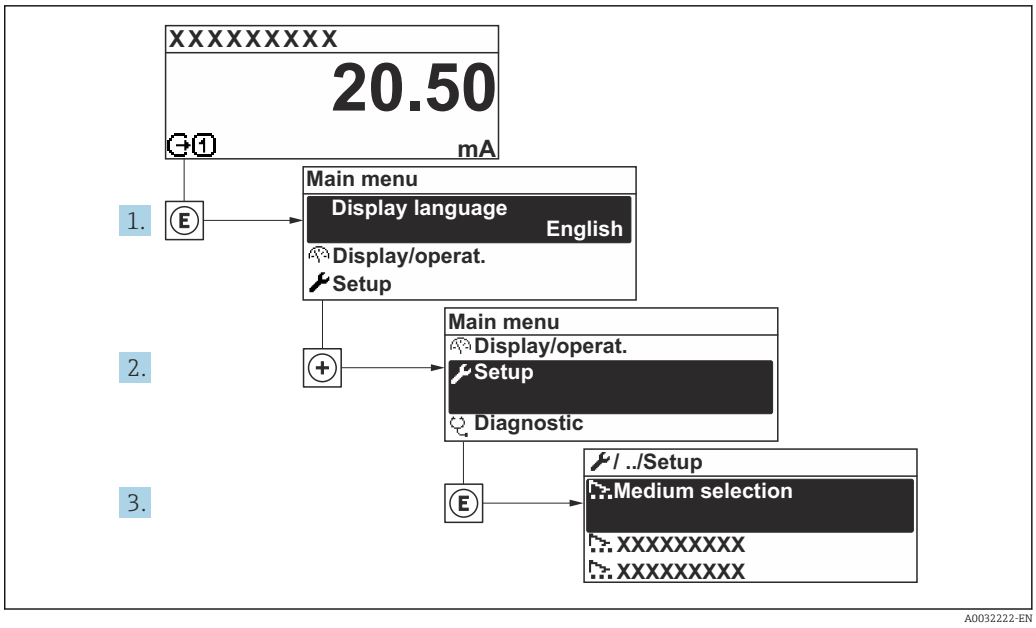

27 *Navigation to the "Setup" menu using the example of the local display*

The number of submenus and parameters can vary depending on the device version. Certain submenus and parameters in these submenus are not described in the Operating Instructions. Instead a description is provided in the Special Documentation for the device ("Supplementary documentation").

Navigation
"Setup" menu → Device tag

Setup	
Device tag	→ 76
▶ Communication	→ 76
▶ System units	→ 79
▶ Medium selection	→ 82
▶ I/O configuration	→ 84
▶ Current input 1 to n	→ 85
▶ Status input 1 to n	→ 86
▶ Current output 1 to n	→ 87
▶ Pulse/frequency/switch output 1 to n	→ 92
▶ Relay output 1 to n	→ 99

▶ **Double pulse output**	→ 📄 102
▶ **Display**	→ 📄 103
▶ **Low flow cutoff**	→ 📄 108
▶ **Partially filled pipe detection**	→ 📄 110
▶ **Advanced setup**	→ 📄 111

Parameter overview with brief description

Parameter	Description	User entry	Factory setting
Device tag	Enter the name for the measuring point.	Character string comprising numbers, letters and special characters (32)	Promass

10.4.1 Displaying the communication interface

The **Communication** submenu shows all the current parameter settings for selecting and configuring the communication interface.

Navigation
"Setup" menu → Communication

▶ **Communication**	
Byte order	→ 📄 77
Failure mode	→ 📄 77
Fieldbus write access	→ 📄 77
▶ **APL port**	→ 📄 77
▶ **Service interface**	→ 📄 78
▶ **Network diagnostics**	→ 📄 79

Parameter overview with brief description

Parameter	Description	Selection	Factory setting
Byte order	Select byte transmission sequence.	▪ 0-1-2-3 ▪ 3-2-1-0 ▪ 1-0-3-2 ▪ 2-3-0-1	1-0-3-2
Failure mode	Select measured value output behavior when a diagnostic message occurs via Modbus communication.	▪ NaN value ▪ Last valid value	NaN value
Fieldbus write access	Select access method to the measuring device via fieldbus.	▪ Read + write ▪ Read only	Read + write

"APL port" submenu

Navigation
"Setup" menu → Communication → APL port

▶ **APL port**

IP address	→ 📄 77
Subnet mask	→ 📄 77
Default gateway	→ 📄 77
MAC address	→ 📄 77
DHCP client	→ 📄 77

Parameter overview with brief description

Parameter	Description	User entry / User interface / Selection	Factory setting
IP address	Enter the IP address of the device.	Character string comprising numbers, letters and special characters (15)	192.168.2.212
Subnet mask	Enter subnet mask of the device.	Character string comprising numbers, letters and special characters (15)	255.255.255.0
Default gateway	Enter IP address for the default gateway of the device.	Character string comprising numbers, letters and special characters (15)	0.0.0.0
MAC address	Shows the MAC address of the measuring device.	Character string comprising numbers, letters and special characters	
DHCP client	Switch the DHCP client functionality on and off.	▪ Off ▪ On	On

"Service interface" submenu

Navigation
"Setup" menu → Communication → Service interface

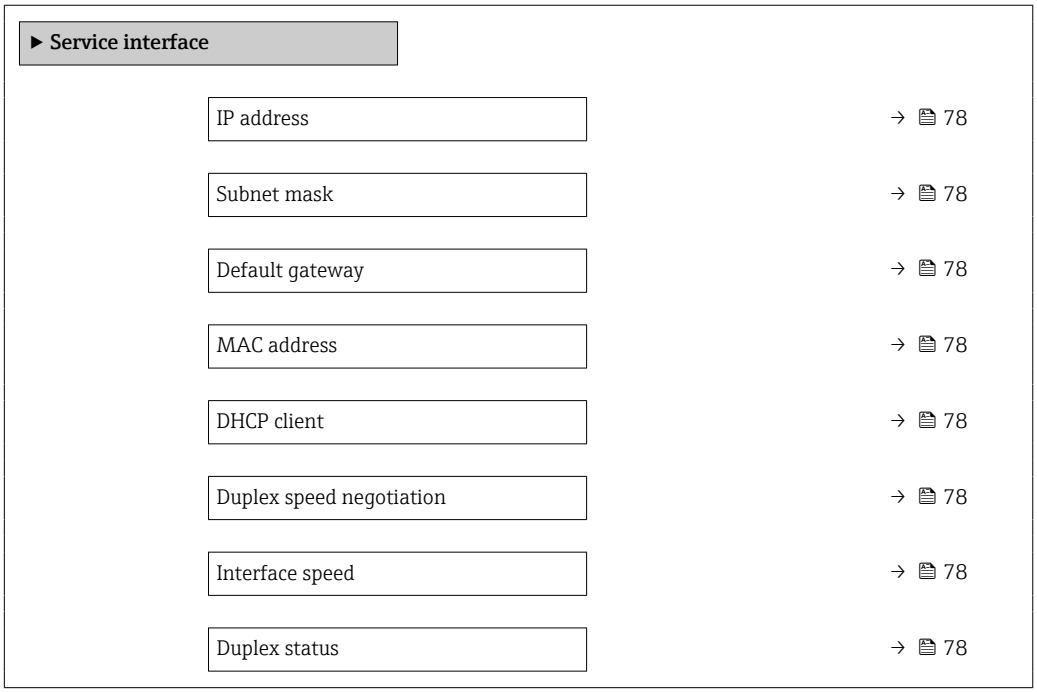

Parameter overview with brief description

Parameter	Description	User entry / User interface / Selection	Factory setting
IP address	Enter the IP address of the service interface (port 2).	4 octet: 0 to 255 (in the particular octet)	192.168.1.212
Subnet mask	Enter the subnet mask of the service interface (port 2).	4 octet: 0 to 255 (in the particular octet)	255.255.255.0
Default gateway	Enter the standard gateway of the service interface (port 2).	4 octet: 0 to 255 (in the particular octet)	0.0.0.0
MAC address	Shows the MAC address of the service interface (port 2).	Unique 12-digit character string comprising letters and numbers, e.g.: 00:07:05:10:01:5F	Each measuring instrument is given an individual address.
DHCP client	Switch the DHCP client functionality on and off.	▪ Off ▪ On	Off
Duplex speed negotiation	Select the duplex mode and transmission speed for the connected devices.	▪ Auto ▪ 10 Mbit/s full duplex ▪ 10 Mbit/s half duplex ▪ 100 Mbit/s full duplex ▪ 100 Mbit/s half duplex	Auto
Interface speed		Positive integer	100 Mbit/s
Duplex status		▪ Full duplex ▪ Half duplex ▪ Unknown	Unknown

"Network diagnostics" submenu

Navigation
"Setup" menu → Communication → Network diagnostics

▶ Network diagnostics	
Signal to noise ratio	→ 📄 79
Number of failed received packets	→ 📄 79
Maximum number of TCP connections	→ 📄 79
TCP connection request rejection	→ 📄 79
Inactivity timeout	→ 📄 79

Parameter overview with brief description

Parameter	Description	User interface / User entry / Selection	Factory setting
Signal to noise ratio	Shows the signal to noise ratio of the Ethernet-APL connection. A value >21dB is good and >23dB is excellent.	Signed floating-point number	0 dB
Number of failed received packets	Shows the number of failed received packets (PHY).	0 to 65 535	0
Maximum number of TCP connections	Select the maximum number of concurrent TCP connections allowed.	1 to 4	4
TCP connection request rejection	Indicate how incoming TCP connection requests should be handled when the maximum number of connections has been established.	▪ Close inactive ▪ Close oldest ▪ Reject	Close inactive
Inactivity timeout	Enter the amount of time until an inactive connection is closed automatically	0 to 99 s	60 s

10.4.2 Setting the system units

In the **System units** submenu the units of all the measured values can be set.

The number of submenus and parameters can vary depending on the device version. Certain submenus and parameters in these submenus are not described in the Operating Instructions. Instead a description is provided in the Special Documentation for the device ("Supplementary documentation").

Navigation
"Setup" menu → System units

▶ System units	
Mass flow unit	→ 📄 80
Mass unit	→ 📄 80

Volume flow unit	→ 🗎 80
Volume unit	→ 🗎 80
Corrected volume flow unit	→ 🗎 80
Corrected volume unit	→ 🗎 80
Density unit	→ 🗎 81
Reference density unit	→ 🗎 80
Density 2 unit	→ 🗎 81
Temperature unit	→ 🗎 81
Pressure unit	→ 🗎 81

Parameter overview with brief description

Parameter	Description	Selection	Factory setting
Mass flow unit	Select mass flow unit. *Effect* The selected unit applies to: ▪ Output ▪ Low flow cut off ▪ Simulation process variable	Unit choose list	Country-specific: ▪ kg/h ▪ lb/min
Mass unit	Select mass unit.	Unit choose list	Country-specific: ▪ kg ▪ lb
Volume flow unit	Select volume flow unit. *Effect* The selected unit applies to: ▪ Output ▪ Low flow cut off ▪ Simulation process variable	Unit choose list	Country-specific: ▪ l/h ▪ gal/min (us)
Volume unit	Select volume unit.	Unit choose list	Country-specific: ▪ l (DN > 150 (6"): **m³** option) ▪ gal (us)
Corrected volume flow unit	Select corrected volume flow unit. *Effect* The selected unit applies to: **Corrected volume flow** parameter (→ 🗎 149)	Unit choose list	Country-specific: ▪ Nl/h ▪ Sft³/min
Corrected volume unit	Select corrected volume unit.	Unit choose list	Country-specific: ▪ Nl ▪ Sft³
Reference density unit	Select reference density unit.	Unit choose list	Country-specific ▪ kg/Nl ▪ lb/Sft³

Parameter	Description	Selection	Factory setting
Density unit	Select density unit. *Effect* The selected unit applies to: ▪ Output ▪ Simulation process variable ▪ Density adjustment (**Expert** menu)	Unit choose list	Country-specific: ▪ kg/l ▪ lb/ft³
Density 2 unit	Select second density unit.	Unit choose list	Country-specific: ▪ kg/l ▪ lb/ft³
Temperature unit	Select temperature unit. *Effect* The selected unit applies to: ▪ **Electronic temperature** parameter (6053) ▪ **Maximum value** parameter (6051) ▪ **Minimum value** parameter (6052) ▪ **Maximum value** parameter (6108) ▪ **Minimum value** parameter (6109) ▪ **Carrier pipe temperature** parameter (6027) ▪ **Maximum value** parameter (6029) ▪ **Minimum value** parameter (6030) ▪ **Reference temperature** parameter (1816) ▪ **Temperature** parameter	Unit choose list	Country-specific: ▪ °C ▪ °F
Pressure unit	Select process pressure unit. *Effect* The unit is taken from: ▪ **Pressure value** parameter (→ 🗎 84) ▪ **External pressure** parameter (→ 🗎 84) ▪ Pressure value	Unit choose list	Country-specific: ▪ bar a ▪ psi a

10.4.3 Selecting and setting the medium

The **Select medium** wizard submenu contains parameters that must be configured in order to select and set the medium.

Navigation
"Setup" menu → Medium selection

▶ **Medium selection**	
MFT (Multi-Frequency Technology)	
Select medium type	→ 83
Select gas type	→ 83
Reference sound velocity	→ 83
Reference sound velocity	→ 83
Temperature coefficient sound velocity	→ 83
Temperature coefficient sound velocity	→ 83
Pressure compensation	→ 83
Pressure value	→ 84
External pressure	→ 84

Parameter overview with brief description

Parameter	Prerequisite	Description	Selection / User entry	Factory setting
Select medium type	–	Use this function to select the type of medium: "Gas" or "Liquid". Select the "Other" option in exceptional cases in order to enter the properties of the medium manually (e.g. for highly compressive liquids such as sulfuric acid).	▪ Liquid ▪ Gas ▪ Other	Liquid
Select gas type	In the **Medium selection** submenu, the **Gas** option is selected.	Select measured gas type.	▪ Air ▪ Ammonia NH3 ▪ Argon Ar ▪ Sulfur hexafluoride SF6 ▪ Oxygen O2 ▪ Ozone O3 ▪ Nitrogen oxide NOx ▪ Nitrogen N2 ▪ Nitrous oxide N2O ▪ Methane CH4 ▪ Methane CH4 + 10% Hydrogen H2 ▪ Methane CH4 + 20% Hydrogen H2 ▪ Methane CH4 + 30% Hydrogen H2 ▪ Hydrogen H2 ▪ Helium He ▪ Hydrogen chloride HCl ▪ Hydrogen sulfide H2S ▪ Ethylene C2H4 ▪ Carbon dioxide CO2 ▪ Carbon monoxide CO ▪ Chlorine Cl2 ▪ Butane C4H10 ▪ Propane C3H8 ▪ Propylene C3H6 ▪ Ethane C2H6 ▪ Other	Methane CH4
Reference sound velocity	In the **Select gas type** parameter, the **Other** option is selected.	Enter sound velocity of the gas at 0 °C (32 °F).	1 to 99999.9999 m/s	415.0 m/s
Reference sound velocity	In the **Select medium type** parameter, the **Other** option is selected.	Enter sound velocity of the medium at 0 °C (32 °F).	Signed floating-point number	1456 m/s
Temperature coefficient sound velocity	In the **Select gas type** parameter, the **Other** option is selected.	Enter the temperature coefficient for the gas sound velocity.	Positive floating point number	0.87 (m/s)/K
Temperature coefficient sound velocity	In the **Select medium type** parameter, the **Other** option is selected.	Enter temperature coefficient for the medium sound velocity.	Signed floating-point number	1.3 (m/s)/K
Pressure compensation	–	Select pressure compensation type.	▪ Off ▪ Fixed value ▪ External value ▪ Current input 1 * ▪ Current input 2 *	Off

Parameter	Prerequisite	Description	Selection / User entry	Factory setting
Pressure value	In the **Pressure compensation** parameter, the **Fixed value** option is selected.	Enter process pressure to be used for pressure correction.	Positive floating-point number	1.01325 bar
External pressure	In the **Pressure compensation** parameter, the **External value** option or the **Current input 1…n** option is selected.	Shows the process pressure read from the external device.		–

* Visibility depends on order options or device settings

10.4.4 Displaying the I/O configuration

The **I/O configuration** submenu guides the user systematically through all the parameters in which the configuration of the I/O modules is displayed.

Navigation

"Setup" menu → I/O configuration

▶ **I/O configuration**

I/O module 1 to n terminal numbers	→ 📄 84
I/O module 1 to n information	→ 📄 84
I/O module 1 to n type	→ 📄 84
Apply I/O configuration	→ 📄 85
I/O alteration code	→ 📄 85

Parameter overview with brief description

Parameter	Description	User interface / Selection / User entry	Factory setting
I/O module 1 to n terminal numbers	Shows the terminal numbers used by the I/O module.	▪ Not used ▪ 26-27 (I/O 1) ▪ 24-25 (I/O 2) ▪ 22-23 (I/O 3)	–
I/O module 1 to n information	Shows information of the plugged I/O module.	▪ Not plugged ▪ Invalid ▪ Not configurable ▪ Configurable ▪ MODBUS	–
I/O module 1 to n type	Shows the I/O module type.	▪ Off ▪ Current output * ▪ Current input * ▪ Status input * ▪ Pulse/frequency/switch output * ▪ Double pulse output * ▪ Relay output *	Off

Parameter	Description	User interface / Selection / User entry	Factory setting
Apply I/O configuration	Apply parameterization of the freely configurable I/O module.	▪ No ▪ Yes	No
I/O alteration code	Enter the code in order to change the I/O configuration.	Positive integer	0

* Visibility depends on order options or device settings

10.4.5 Configuring the current input

The **"Current input" wizard** guides the user systematically through all the parameters that have to be set for configuring the current input.

Navigation
"Setup" menu → Current input 1 to n

▶ Current input 1 to n	
Current span	→ 📄 86
Terminal number	→ 📄 86
Signal mode	→ 📄 86
Terminal number	→ 📄 86
0/4 mA value	→ 📄 86
20 mA value	→ 📄 86
Failure mode	→ 📄 86
Terminal number	→ 📄 86
Failure value	→ 📄 86
Terminal number	→ 📄 86

Parameter overview with brief description

Parameter	Prerequisite	Description	Selection / User interface / User entry	Factory setting
Current span	–	Select current range for process value output and upper/lower level for alarm signal.	▪ 4 … 20 mA (4 … 20.5 mA) ▪ 4 … 20 mA NE (3.8 … 20.5 mA) ▪ 4 … 20 mA US (3.9 … 20.8 mA) ▪ 0…20 mA (0…20.5 mA)	4 … 20 mA NE (3.8 … 20.5 mA)
Terminal number	–	Shows the terminal numbers used by the current input module.	▪ Not used ▪ 24-25 (I/O 2) ▪ 22-23 (I/O 3)	–
Signal mode	The measuring device is **not** approved for use in the hazardous area with type of protection Ex-i.	Select the signal mode for the current input.	▪ Passive ▪ Active *	Active
0/4 mA value	–	Enter 4 mA value.	Signed floating-point number	0
20 mA value	–	Enter 20 mA value.	Signed floating-point number	Depends on country and nominal diameter
Failure mode	–	Define input behavior in alarm condition.	▪ Alarm ▪ Last valid value ▪ Defined value	Alarm
Failure value	In the **Failure mode** parameter, the **Defined value** option is selected.	Enter value to be used by the device if input value from external device is missing.	Signed floating-point number	0

* Visibility depends on order options or device settings

10.4.6 Configuring the status input

The **Status input** submenu guides the user systematically through all the parameters that have to be set for configuring the status input.

Navigation

"Setup" menu → Status input 1 to n

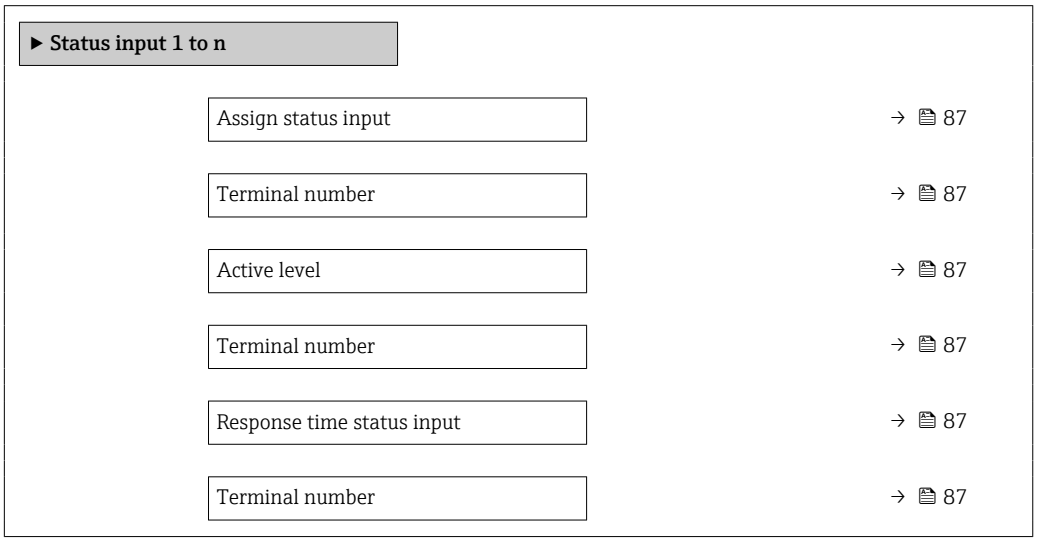

Parameter overview with brief description

Parameter	Description	Selection / User interface / User entry	Factory setting
Assign status input	Select function for the status input.	▪ Off ▪ Reset totalizer 1 ▪ Reset totalizer 2 ▪ Reset totalizer 3 ▪ Reset all totalizers ▪ Flow override ▪ Zero adjustment ▪ Reset weighted averages * ▪ Reset weighted averages + totalizer 3 *	Off
Terminal number	Shows the terminal numbers used by the status input module.	▪ Not used ▪ 24-25 (I/O 2) ▪ 22-23 (I/O 3)	–
Active level	Define input signal level at which the assigned function is triggered.	▪ High ▪ Low	High
Response time status input	Define the minimum amount of time the input signal level must be present before the selected function is triggered.	5 to 200 ms	50 ms

* Visibility depends on order options or device settings

10.4.7 Configuring the current output

The **Current output** wizard guides you systematically through all the parameters that have to be set for configuring the current output.

Navigation
"Setup" menu → Current output

▶ **Current output 1 to n**

Process variable current output	→ 📄 89
Terminal number	→ 📄 90
Current range output	→ 📄 90
Terminal number	→ 📄 90
Signal mode	→ 📄 90
Terminal number	→ 📄 90
Lower range value output	→ 📄 90
Upper range value output	→ 📄 90
Fixed current	→ 📄 90
Terminal number	→ 📄 90

Damping current output	→ 📄 90
Failure behavior current output	→ 📄 91
Terminal number	→ 📄 90
Failure current	→ 📄 91
Terminal number	→ 📄 90

Parameter overview with brief description

Parameter	Prerequisite	Description	Selection / User interface / User entry	Factory setting
Process variable current output	–	Select the process variable for the current output.	▪ Off * ▪ Mass flow ▪ Volume flow ▪ Corrected volume flow * ▪ Density ▪ Reference density * ▪ Temperature ▪ Target mass flow * ▪ Carrier mass flow * ▪ Target volume flow * ▪ Carrier volume flow * ▪ Target corrected volume flow * ▪ Carrier corrected volume flow * ▪ Reference density alternative * ▪ GSV flow * ▪ GSV flow alternative * ▪ NSV flow * ▪ NSV flow alternative * ▪ S&W volume flow * ▪ Water cut * ▪ Oil density * ▪ Water density * ▪ Oil mass flow * ▪ Water mass flow * ▪ Oil volume flow * ▪ Water volume flow * ▪ Oil corrected volume flow * ▪ Water corrected volume flow * ▪ Concentration * ▪ Application specific output 0 * ▪ Application specific output 1 * ▪ Inhomogeneous medium index ▪ Suspended bubbles index * ▪ Raw value mass flow ▪ Exciter current 0 ▪ Oscillation damping 0 ▪ Oscillation damping fluctuation 0 * ▪ Oscillation frequency 0 ▪ Frequency fluctuation 0 * ▪ Signal asymmetry ▪ Torsion signal asymmetry * ▪ Carrier pipe temperature *	Mass flow

Parameter	Prerequisite	Description	Selection / User interface / User entry	Factory setting
			▪ Frequency fluctuation 0 * ▪ Oscillation amplitude 0 * ▪ Oscillation damping fluctuation 0 * ▪ HBSI * ▪ Pressure * ▪ Electronics temperature ▪ Sensor index coil asymmetry ▪ Test point 0 ▪ Test point 1	
Terminal number	–	Shows the terminal numbers used by the current output module.	▪ Not used ▪ 26-27 (I/O 1) ▪ 24-25 (I/O 2) ▪ 22-23 (I/O 3)	–
Current range output	–	Select current range for process value output and upper/lower level for alarm signal.	▪ 4 ... 20 mA NE (3.8 ... 20.5 mA) ▪ 4 ... 20 mA US (3.9 ... 20.8 mA) ▪ 4 ... 20 mA (4 ... 20.5 mA) ▪ 0...20 mA (0...20.5 mA) ▪ Fixed value	Depends on country: ▪ 4 ... 20 mA NE (3.8 ... 20.5 mA) ▪ 4 ... 20 mA US (3.9 ... 20.8 mA)
Signal mode	–	Select the signal mode for the current output.	▪ Active * ▪ Passive *	Active
Lower range value output	In **Current span** parameter (→ 🗎 90), one of the following options is selected: ▪ 4 ... 20 mA NE (3.8 ... 20.5 mA) ▪ 4 ... 20 mA US (3.9 ... 20.8 mA) ▪ 4 ... 20 mA (4 ... 20.5 mA) ▪ 0...20 mA (0...20.5 mA)	Enter lower range value for the measured value range.	Signed floating-point number	Depends on country: ▪ 0 kg/h ▪ 0 lb/min
Upper range value output	In **Current span** parameter (→ 🗎 90), one of the following options is selected: ▪ 4 ... 20 mA NE (3.8 ... 20.5 mA) ▪ 4 ... 20 mA US (3.9 ... 20.8 mA) ▪ 4 ... 20 mA (4 ... 20.5 mA) ▪ 0...20 mA (0...20.5 mA)	Enter upper range value for the measured value range.	Signed floating-point number	Depends on country and nominal diameter
Fixed current	The **Fixed current** option is selected in the **Current span** parameter (→ 🗎 90).	Defines the fixed output current.	0 to 22.5 mA	22.5 mA
Damping current output	A process variable is selected in the **Assign current output** parameter (→ 🗎 89) and one of the following options is selected in the **Current span** parameter (→ 🗎 90): ▪ 4 ... 20 mA NE (3.8 ... 20.5 mA) ▪ 4 ... 20 mA US (3.9 ... 20.8 mA) ▪ 4 ... 20 mA (4 ... 20.5 mA) ▪ 0...20 mA (0...20.5 mA)	Enter a time constant for output damping (PT1 element). Damping reduces the effect of fluctuations in the measured value on the output signal.	0.0 to 999.9 s	1.0 s

Parameter	Prerequisite	Description	Selection / User interface / User entry	Factory setting
Failure behavior current output	A process variable is selected in the **Assign current output** parameter (→ 🗎 89) and one of the following options is selected in the **Current span** parameter (→ 🗎 90): ▪ 4 … 20 mA NE (3.8 … 20.5 mA) ▪ 4 … 20 mA US (3.9 … 20.8 mA) ▪ 4 … 20 mA (4 … 20.5 mA) ▪ 0…20 mA (0…20.5 mA)	Select output behavior in the event of a device alarm.	▪ Min. ▪ Max. ▪ Last valid value ▪ Actual value ▪ Fixed value	Max.
Failure current	The **Defined value** option is selected in the **Failure mode** parameter.	Enter current output value in alarm condition.	0 to 22.5 mA	22.5 mA

* Visibility depends on order options or device settings

10.4.8 "Pulse/frequency/switch output 1 to n" wizard

The **Pulse/frequency/switch output** wizard guides you systematically through all the parameters that can be set for configuring the selected output type.

Navigation
"Setup" menu → Pulse/frequency/switch output 1 to n

▶ **Pulse/frequency/switch output 1 to n**	
Operating mode	→ 93
Terminal number	→ 93
Signal mode	→ 93
Assign pulse output	→ 93
Assign frequency output	→ 94
Switch output function	→ 95
Assign diagnostic behavior	→ 95
Assign limit	→ 96
Assign flow direction check	→ 96
Assign status	→ 97
Pulse scaling	→ 97
Pulse width	→ 97
Failure mode	→ 97
Minimum frequency value	→ 97
Maximum frequency value	→ 97
Measuring value at minimum frequency	→ 97
Measuring value at maximum frequency	→ 97
Output damping	→ 98
Failure mode	→ 98

Failure frequency	→ 📄 98
Switch-on value	→ 📄 98
Switch-off value	→ 📄 98
Switch-on delay	→ 📄 98
Switch-off delay	→ 📄 98
Failure mode	→ 📄 99
Invert output signal	→ 📄 99

Parameter overview with brief description

Parameter	Prerequisite	Description	Selection / User interface / User entry	Factory setting
Operating mode	–	Define the output as a pulse, frequency or switch output.	▪ Pulse ▪ Frequency ▪ Switch	Pulse
Terminal number	–	Shows the terminal numbers used by the PFS output module.	▪ Not used ▪ 24-25 (I/O 2) ▪ 22-23 (I/O 3)	–
Signal mode	–	Select the signal mode for the PFS output.	▪ Passive ▪ Active * ▪ Passive NE	Passive
Assign pulse output	The **Pulse** option is selected in **Operating mode** parameter.	Select process variable for pulse output.	▪ Off ▪ Mass flow ▪ Volume flow ▪ Corrected volume flow * ▪ Target mass flow * ▪ Carrier mass flow * ▪ Target volume flow * ▪ Carrier volume flow * ▪ Target corrected volume flow * ▪ Carrier corrected volume flow * ▪ GSV flow * ▪ GSV flow alternative * ▪ NSV flow * ▪ NSV flow alternative * ▪ S&W volume flow * ▪ Oil mass flow * ▪ Water mass flow * ▪ Oil volume flow * ▪ Water volume flow * ▪ Oil corrected volume flow * ▪ Water corrected volume flow *	Off

Parameter	Prerequisite	Description	Selection / User interface / User entry	Factory setting
Assign frequency output	The **Frequency** option is selected in **Operating mode** parameter (→ 🗎 93).	Select process variable for frequency output.	▪ Off ▪ Mass flow ▪ Volume flow ▪ Corrected volume flow * ▪ Density ▪ Reference density * ▪ Time period signal frequency (TPS) * ▪ Temperature ▪ Pressure ▪ GSV flow * ▪ GSV flow alternative * ▪ NSV flow * ▪ NSV flow alternative * ▪ S&W volume flow * ▪ Reference density alternative * ▪ Water cut * ▪ Oil density * ▪ Water density * ▪ Oil mass flow * ▪ Water mass flow * ▪ Oil volume flow * ▪ Water volume flow * ▪ Oil corrected volume flow * ▪ Water corrected volume flow * ▪ Concentration * ▪ Target mass flow * ▪ Carrier mass flow * ▪ Target volume flow * ▪ Carrier volume flow * ▪ Target corrected volume flow * ▪ Carrier corrected volume flow * ▪ Application specific output 0 * ▪ Application specific output 1 * ▪ Inhomogeneous medium index ▪ Suspended bubbles index * ▪ HBSI * ▪ Raw value mass flow ▪ Exciter current 0 ▪ Oscillation damping 0 ▪ Oscillation damping fluctuation 0 * ▪ Oscillation frequency 0 ▪ Frequency fluctuation 0 * ▪ Oscillation amplitude 0 * ▪ Signal asymmetry	Off

Parameter	Prerequisite	Description	Selection / User interface / User entry	Factory setting
			▪ Torsion signal asymmetry * ▪ Carrier pipe temperature * ▪ Electronics temperature ▪ Sensor index coil asymmetry ▪ Test point 0 ▪ Test point 1	
Switch output function	The **Switch** option is selected in the **Operating mode** parameter.	Select function for switch output.	▪ Off ▪ On ▪ Diagnostic behavior ▪ Limit ▪ Flow direction check ▪ Status	Off
Assign diagnostic behavior	–	The output is switched on (closed, conductive), if there is a pending diagnostic event of the assigned behavioral category.	▪ Alarm ▪ Alarm or warning ▪ Warning	Alarm

Parameter	Prerequisite	Description	Selection / User interface / User entry	Factory setting
Assign limit	▪ The **Switch** option is selected in **Operating mode** parameter. ▪ The **Limit** option is selected in **Switch output function** parameter.	Select the variable to monitor in case the specified limit value is exceeded. If a limit value is exceeded, the output is switched on (conductive).	▪ Mass flow ▪ Volume flow ▪ Corrected volume flow * ▪ Target mass flow * ▪ Carrier mass flow * ▪ Target volume flow * ▪ Carrier volume flow * ▪ Target corrected volume flow * ▪ Carrier corrected volume flow * ▪ Density ▪ Reference density * ▪ Reference density alternative * ▪ GSV flow * ▪ GSV flow alternative * ▪ NSV flow * ▪ NSV flow alternative * ▪ S&W volume flow * ▪ Water cut * ▪ Oil density * ▪ Water density * ▪ Oil mass flow * ▪ Water mass flow * ▪ Oil volume flow * ▪ Water volume flow * ▪ Oil corrected volume flow * ▪ Water corrected volume flow * ▪ Concentration * ▪ Temperature ▪ Totalizer 1 ▪ Totalizer 2 ▪ Totalizer 3 ▪ Oscillation damping ▪ Pressure ▪ Application specific output 0 * ▪ Application specific output 1 * ▪ Inhomogeneous medium index ▪ Suspended bubbles index *	Volume flow
Assign flow direction check	▪ The **Switch** option is selected in the **Operating mode** parameter. ▪ The **Flow direction check** option is selected in the **Switch output function** parameter.	Select process variable for flow direction monitoring.		Mass flow

Parameter	Prerequisite	Description	Selection / User interface / User entry	Factory setting
Assign status	▪ The **Switch** option is selected in **Operating mode** parameter. ▪ The **Status** option is selected in **Switch output function** parameter.	Select the device function for which to display the status. If the switch on point is reached, the output is switched on (closed, conductive).	▪ Partially filled pipe detection ▪ Low flow cutoff	Partially filled pipe detection
Pulse scaling	The **Pulse** option is selected in the **Operating mode** parameter (→ 🗎 93) and a process variable is selected in the **Assign pulse output** parameter (→ 🗎 93).	Enter quantity for measured value at which a pulse is output.	Positive floating point number	Depends on country and nominal diameter
Pulse width	The **Pulse** option is selected in the **Operating mode** parameter (→ 🗎 93) and a process variable is selected in the **Assign pulse output** parameter (→ 🗎 93).	Define time width of the output pulse.	0.05 to 2 000 ms	100 ms
Failure mode	The **Pulse** option is selected in the **Operating mode** parameter (→ 🗎 93) and a process variable is selected in the **Assign pulse output** parameter (→ 🗎 93).	Select output behavior in the event of a device alarm.	▪ Actual value ▪ No pulses	No pulses
Minimum frequency value	The **Frequency** option is selected in the **Operating mode** parameter (→ 🗎 93) and a process variable is selected in the **Assign frequency output** parameter (→ 🗎 94).	Enter minimum frequency.	0.0 to 10 000.0 Hz	0.0 Hz
Maximum frequency value	The **Frequency** option is selected in the **Operating mode** parameter (→ 🗎 93) and a process variable is selected in the **Assign frequency output** parameter (→ 🗎 94).	Enter maximum frequency.	0.0 to 10 000.0 Hz	10 000.0 Hz
Measuring value at minimum frequency	The **Frequency** option is selected in the **Operating mode** parameter (→ 🗎 93) and a process variable is selected in the **Assign frequency output** parameter (→ 🗎 94).	Enter measured value for minimum frequency.	Signed floating-point number	Depends on country and nominal diameter
Measuring value at maximum frequency	The **Frequency** option is selected in the **Operating mode** parameter (→ 🗎 93) and a process variable is selected in the **Assign frequency output** parameter (→ 🗎 94).	Enter measured value for maximum frequency.	Signed floating-point number	Depends on country and nominal diameter

Parameter	Prerequisite	Description	Selection / User interface / User entry	Factory setting
Output damping	The **Frequency** option is selected in the **Operating mode** parameter and one of the following options is selected in the **Assign frequency output** parameter (→ 🗎 94): ▪ Mass flow ▪ Volume flow ▪ Corrected volume flow ▪ Target mass flow * ▪ Carrier mass flow * ▪ Density ▪ Reference density ▪ Concentration * ▪ Temperature ▪ Carrier pipe temperature * ▪ Electronics temperature ▪ Oscillation frequency 0 ▪ Frequency fluctuation 0 ▪ Oscillation amplitude 0 * ▪ Oscillation damping 0 ▪ Oscillation damping fluctuation 0 ▪ Signal asymmetry ▪ Exciter current 0	Enter a time constant for output damping (PT1 element). Damping reduces the effect of fluctuations in the measured value on the output signal.	0 to 999.9 s	0.0 s
Failure mode	The **Frequency** option is selected in the **Operating mode** parameter (→ 🗎 93) and a process variable is selected in the **Assign frequency output** parameter (→ 🗎 94).	Select output behavior in the event of a device alarm.	▪ Actual value ▪ Fixed value ▪ 0 Hz	0 Hz
Failure frequency	In the **Operating mode** parameter (→ 🗎 93), the **Frequency** option is selected, in the **Assign frequency output** parameter (→ 🗎 94) a process variable is selected, and in the **Failure mode** parameter, the **Defined value** option is selected.	Enter frequency output value in alarm condition.	0.0 to 12 500.0 Hz	0.0 Hz
Switch-on value	▪ The **Switch** option is selected in the **Operating mode** parameter. ▪ The **Limit** option is selected in the **Switch output function** parameter.	Enter limit value for switch-on point (process variable > switch-on value = closed, conductive).	Signed floating-point number	Depends on country: ▪ 0 kg/h ▪ 0 lb/min
Switch-off value	▪ The **Switch** option is selected in the **Operating mode** parameter. ▪ The **Limit** option is selected in the **Switch output function** parameter.	Enter limit value for switch-off point (process variable < switch-off value = open, nonconductive).	Signed floating-point number	Depends on country: ▪ 0 kg/h ▪ 0 lb/min
Switch-on delay	–	Enter a delay before the output is switched on.	0.0 to 100.0 s	0.0 s
Switch-off delay	–	Enter a delay before the output is switched off.	0.0 to 100.0 s	0.0 s

Parameter	Prerequisite	Description	Selection / User interface / User entry	Factory setting
Failure mode	–	Select output behavior in the event of a device alarm.	▪ Actual status ▪ Open ▪ Closed	Open
Invert output signal	–	Invert the output signal.	▪ No ▪ Yes	No

* Visibility depends on order options or device settings

10.4.9 Configuring the relay output

The **Relay output** wizard guides the user systematically through all the parameters that have to be set for configuring the relay output.

Navigation
"Setup" menu → Relay output 1 to n

▶ **Relay output 1 to n**	
Relay output function	→ 🗎 100
Terminal number	→ 🗎 100
Assign flow direction check	→ 🗎 100
Terminal number	→ 🗎 100
Assign limit	→ 🗎 101
Terminal number	→ 🗎 100
Assign diagnostic behavior	→ 🗎 101
Terminal number	→ 🗎 100
Assign status	→ 🗎 101
Terminal number	→ 🗎 100
Switch-off value	→ 🗎 102
Switch-off delay	→ 🗎 102
Switch-on value	→ 🗎 102
Switch-on delay	→ 🗎 102

Failure mode	→ 102
Terminal number	→ 100

Parameter overview with brief description

Parameter	Prerequisite	Description	Selection / User interface / User entry	Factory setting
Relay output function	–	Select the function for the relay output.	▪ Closed ▪ Open ▪ Diagnostic behavior ▪ Limit ▪ Flow direction check ▪ Status	Closed
Terminal number	–	Shows the terminal numbers used by the relay output module.	▪ Not used ▪ 24-25 (I/O 2) ▪ 22-23 (I/O 3)	–
Assign flow direction check	The **Flow direction check** option is selected in the **Relay output function** parameter.	Select process variable for flow direction monitoring.		Mass flow

Parameter	Prerequisite	Description	Selection / User interface / User entry	Factory setting
Assign limit	The **Limit** option is selected in **Relay output function** parameter.	Select the variable to monitor in case the specified limit value is exceeded. If a limit value is exceeded, the output is switched on (conductive).	▪ Mass flow ▪ Volume flow ▪ Corrected volume flow * ▪ Target mass flow * ▪ Carrier mass flow * ▪ Target volume flow * ▪ Carrier volume flow * ▪ Target corrected volume flow * ▪ Carrier corrected volume flow * ▪ Density ▪ Reference density * ▪ Reference density alternative * ▪ GSV flow * ▪ GSV flow alternative * ▪ NSV flow * ▪ NSV flow alternative * ▪ S&W volume flow * ▪ Water cut * ▪ Oil density * ▪ Water density * ▪ Oil mass flow * ▪ Water mass flow * ▪ Oil volume flow * ▪ Water volume flow * ▪ Oil corrected volume flow * ▪ Water corrected volume flow * ▪ Concentration * ▪ Temperature ▪ Totalizer 1 ▪ Totalizer 2 ▪ Totalizer 3 ▪ Oscillation damping ▪ Pressure ▪ Application specific output 0 * ▪ Application specific output 1 * ▪ Inhomogeneous medium index ▪ Suspended bubbles index *	Mass flow
Assign diagnostic behavior	In the **Relay output function** parameter, the **Diagnostic behavior** option is selected.	The output is switched on (closed, conductive), if there is a pending diagnostic event of the assigned behavioral category.	▪ Alarm ▪ Alarm or warning ▪ Warning	Alarm
Assign status	In the **Relay output function** parameter, the **Digital Output** option is selected.	Select the device function for which to display the status. If the switch on point is reached, the output is switched on (closed, conductive).	▪ Partially filled pipe detection ▪ Low flow cutoff	Partially filled pipe detection

Parameter	Prerequisite	Description	Selection / User interface / User entry	Factory setting
Switch-off value	The **Limit** option is selected in the **Relay output function** parameter.	Enter limit value for switch-off point (process variable < switch-off value = open, nonconductive).	Signed floating-point number	Depends on country: ▪ 0 kg/h ▪ 0 lb/min
Switch-off delay	In the **Relay output function** parameter, the **Limit** option is selected.	Enter a delay before the output is switched off.	0.0 to 100.0 s	0.0 s
Switch-on value	The **Limit** option is selected in the **Relay output function** parameter.	Enter measured value for the switch-on point.	Signed floating-point number	Depends on country: ▪ 0 kg/h ▪ 0 lb/min
Switch-on delay	In the **Relay output function** parameter, the **Limit** option is selected.	Enter a delay before the output is switched on.	0.0 to 100.0 s	0.0 s
Failure mode	–	Select output behavior in the event of a device alarm.	▪ Actual status ▪ Open ▪ Closed	Open
Switch state	–	Indicates the current switch state of the output.	▪ Open ▪ Closed	–

* Visibility depends on order options or device settings

10.4.10 Configuring the double pulse output

The **Double pulse output** submenu guides the user systematically through all the parameters that have to be set for configuring the double pulse output.

Navigation
"Setup" menu → Double pulse output

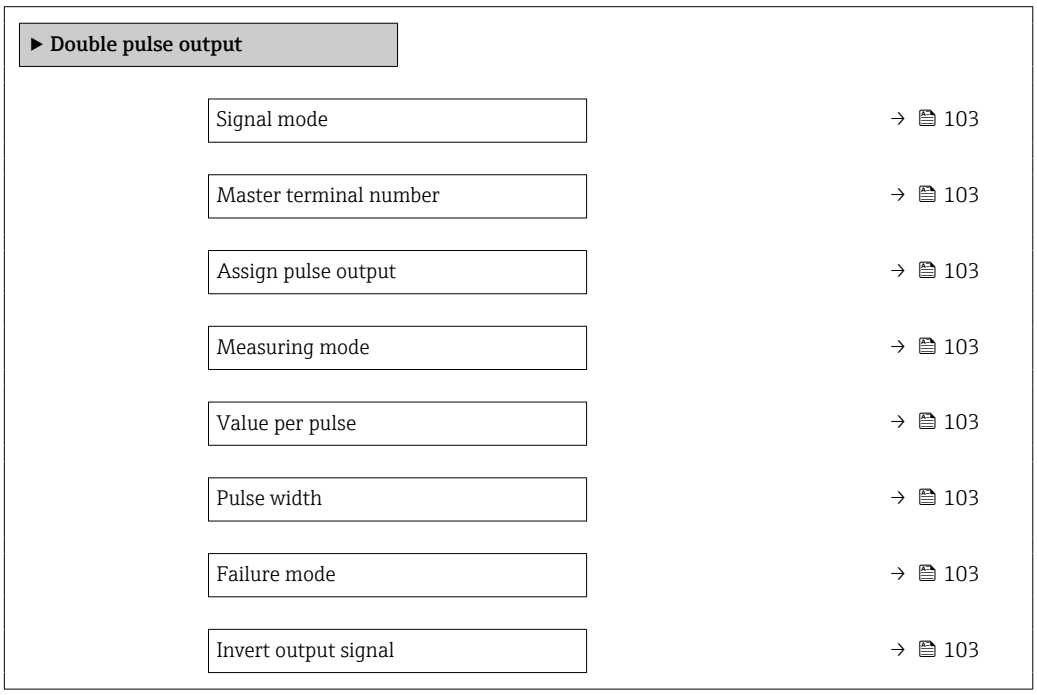

Parameter overview with brief description

Parameter	Description	Selection / User interface / User entry	Factory setting
Signal mode	Select the signal mode for the double pulse output.	▪ Passive ▪ Active * ▪ Passive NE	Passive
Master terminal number	Shows the terminal numbers used by the master of the double pulse output module.	▪ Not used ▪ 24-25 (I/O 2) ▪ 22-23 (I/O 3)	–
Assign pulse output	Select process variable for pulse output.	▪ Off ▪ Mass flow ▪ Volume flow ▪ Corrected volume flow * ▪ Target mass flow * ▪ Carrier mass flow * ▪ Target volume flow * ▪ Carrier volume flow * ▪ Target corrected volume flow * ▪ Carrier corrected volume flow * ▪ GSV flow * ▪ GSV flow alternative * ▪ NSV flow * ▪ NSV flow alternative * ▪ S&W volume flow * ▪ Oil mass flow * ▪ Water mass flow * ▪ Oil volume flow * ▪ Water volume flow * ▪ Oil corrected volume flow * ▪ Water corrected volume flow *	Off
Measuring mode	Select measuring mode for pulse output.	▪ Forward flow ▪ Forward/Reverse flow ▪ Reverse flow ▪ Reverse flow compensation	Forward flow
Value per pulse	Enter measured value at which a pulse is output.	Signed floating-point number	Depends on country and nominal diameter
Pulse width	Define time width of the output pulse.	0.5 to 2 000 ms	0.5 ms
Failure mode	Select output behavior in the event of a device alarm.	▪ Actual value ▪ No pulses	No pulses
Invert output signal	Invert the output signal.	▪ No ▪ Yes	No

* Visibility depends on order options or device settings

10.4.11 Configuring the local display

The **Display** wizard guides you systematically through all the parameters that can configured for configuring the local display.

Navigation
"Setup" menu → Display

▶ Display		
	Format display	→ 📄 105

Value 1 display	→ 📄 106
0% bargraph value 1	→ 📄 107
100% bargraph value 1	→ 📄 107
Value 2 display	→ 📄 107
Value 3 display	→ 📄 107
0% bargraph value 3	→ 📄 107
100% bargraph value 3	→ 📄 107
Value 4 display	→ 📄 107
Value 5 display	→ 📄 108
Value 6 display	→ 📄 108
Value 7 display	→ 📄 108
Value 8 display	→ 📄 108

Parameter overview with brief description

Parameter	Prerequisite	Description	Selection / User entry	Factory setting
Format display	A local display is provided.	Select how measured values are shown on the display.	▪ 1 value, max. size ▪ 1 bargraph + 1 value ▪ 2 values ▪ 1 value large + 2 values ▪ 4 values	1 value, max. size

Parameter	Prerequisite	Description	Selection / User entry	Factory setting
Value 1 display	A local display is provided.	Select the measured value that is shown on the local display.	▪ Mass flow ▪ Volume flow ▪ Corrected volume flow * ▪ Density ▪ Reference density * ▪ Temperature ▪ Pressure ▪ Totalizer 1 ▪ Totalizer 2 ▪ Totalizer 3 ▪ GSV flow * ▪ GSV flow alternative * ▪ NSV flow * ▪ NSV flow alternative * ▪ S&W volume flow * ▪ Reference density alternative * ▪ Weighted density average * ▪ Weighted temperature average * ▪ Water cut * ▪ Oil density * ▪ Water density * ▪ Oil mass flow * ▪ Water mass flow * ▪ Oil volume flow * ▪ Water volume flow * ▪ Oil corrected volume flow * ▪ Water corrected volume flow * ▪ Concentration * ▪ Target mass flow * ▪ Carrier mass flow * ▪ Target volume flow * ▪ Carrier volume flow * ▪ Target corrected volume flow * ▪ Carrier corrected volume flow * ▪ Application specific output 0 * ▪ Application specific output 1 * ▪ Inhomogeneous medium index ▪ Suspended bubbles index * ▪ HBSI * ▪ Raw value mass flow ▪ Exciter current 0 ▪ Oscillation damping 0 ▪ Oscillation damping fluctuation 0 * ▪ Oscillation frequency 0	Mass flow

Parameter	Prerequisite	Description	Selection / User entry	Factory setting
			▪ Frequency fluctuation 0 * ▪ Oscillation amplitude 0 * ▪ Signal asymmetry ▪ Torsion signal asymmetry * ▪ Carrier pipe temperature * ▪ Electronics temperature ▪ Sensor index coil asymmetry ▪ Test point 0 ▪ Test point 1 ▪ Current output 1 ▪ Current output 2 * ▪ Current output 3 *	
0% bargraph value 1	A local display is provided.	Enter 0 % value for bar graph display.	Signed floating-point number	Country-specific: ▪ 0 kg/h ▪ 0 lb/min
100% bargraph value 1	A local display is provided.	Enter 100 % value for bar graph display.	Signed floating-point number	Depends on country and nominal diameter
Value 2 display	A local display is provided.	Select the measured value that is shown on the local display.	For the picklist, see **Value 1 display** parameter (→ 🗎 106)	None
Value 3 display	A local display is provided.	Select the measured value that is shown on the local display.	For the picklist, see **Value 1 display** parameter (→ 🗎 106)	None
0% bargraph value 3	A selection was made in the **Value 3 display** parameter.	Enter 0 % value for bar graph display.	Signed floating-point number	Country-specific: ▪ 0 kg/h ▪ 0 lb/min
100% bargraph value 3	A selection was made in the **Value 3 display** parameter.	Enter 100 % value for bar graph display.	Signed floating-point number	0
Value 4 display	A local display is provided.	Select the measured value that is shown on the local display.	For the picklist, see **Value 1 display** parameter (→ 🗎 106)	None
Display language	A local display is provided.	Set display language.	▪ English ▪ Deutsch ▪ Français ▪ Español ▪ Italiano ▪ Nederlands ▪ Portuguesa ▪ Polski ▪ русский язык (Russian) ▪ Svenska ▪ Türkçe ▪ 中文 (Chinese) ▪ 日本語 (Japanese) ▪ 한국어 (Korean) ▪ tiếng Việt (Vietnamese) * ▪ čeština (Czech)	English (alternatively, the ordered language is preset in the device)
Display interval	A local display is provided.	Set time measured values are shown on display if display alternates between values.	1 to 10 s	5 s

Parameter	Prerequisite	Description	Selection / User entry	Factory setting
Display damping	A local display is provided.	Set display reaction time to fluctuations in the measured value.	0.0 to 999.9 s	0.0 s
Header	A local display is provided.	Select header contents on local display.	▪ Device tag ▪ Free text	Device tag
Header text	The **Free text** option is selected in the **Header** parameter.	Enter display header text.	Max. 12 characters, such as letters, numbers or special characters (e.g. @, %, /)	----------
Separator	A local display is provided.	Select decimal separator for displaying numerical values.	▪ . (point) ▪ , (comma)	. (point)
Backlight	–	Switch the local display backlight on and off.	▪ Disable ▪ Enable	Enable
Value 5 display	A local display is provided.	Select the measured value that is shown on the local display.	For the picklist, see **Value 1 display** parameter (→ 🗎 106)	None
Value 6 display	A local display is provided.	Select the measured value that is shown on the local display.	For the picklist, see **Value 1 display** parameter (→ 🗎 106)	None
Value 7 display	A local display is provided.	Select the measured value that is shown on the local display.	For the picklist, see **Value 1 display** parameter (→ 🗎 106)	None
Value 8 display	A local display is provided.	Select the measured value that is shown on the local display.	For the picklist, see **Value 1 display** parameter (→ 🗎 106)	None

* Visibility depends on order options or device settings

10.4.12 Configuring the low flow cut off

The **Low flow cutoff** wizard systematically guides the user through all the parameters that must be set to configure low flow cut off.

Navigation

"Setup" menu → Low flow cutoff

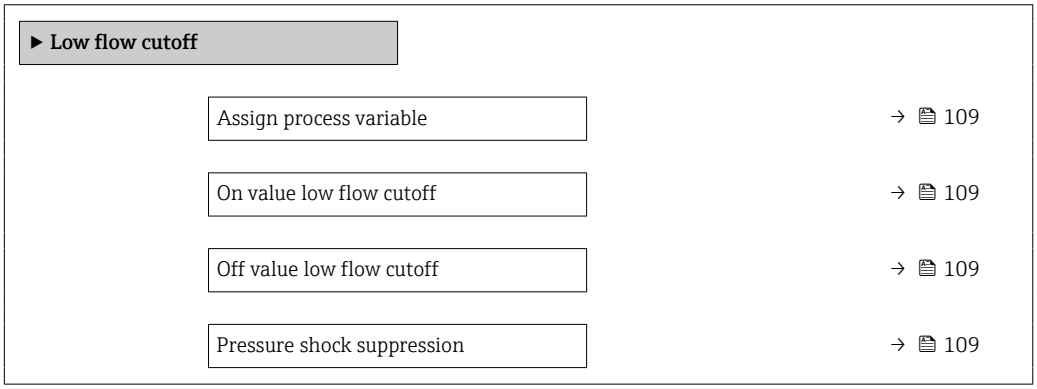

Parameter overview with brief description

Parameter	Prerequisite	Description	Selection / User entry	Factory setting
Assign process variable	–	Select process variable for low flow cutoff.	▪ Off ▪ Mass flow ▪ Volume flow ▪ Corrected volume flow *	Mass flow
On value low flow cutoff	A process variable is selected in the **Assign process variable** parameter (→ 🗎 109).	Enter on value for low flow cutoff.	Positive floating-point number	Depends on country and nominal diameter
Off value low flow cutoff	A process variable is selected in the **Assign process variable** parameter (→ 🗎 109).	Enter off value for low flow cutoff.	0 to 100.0 %	50 %
Pressure shock suppression	A process variable is selected in the **Assign process variable** parameter (→ 🗎 109).	Enter time frame for signal suppression (= active pressure shock suppression).	0 to 100 s	0 s

* Visibility depends on order options or device settings

10.4.13 Configuring partially filled pipe detection

The **Partial filled pipe detection** wizard guides you systematically through all parameters that have to be set for configuring the monitoring of the pipe filling.

Navigation
"Setup" menu → Partially filled pipe detection

▶ **Partially filled pipe detection**	
Partially filled pipe detection	→ 🗎 110
Low value partial filled pipe detection	→ 🗎 110
High value partial filled pipe detection	→ 🗎 110
Response time part. filled pipe detect.	→ 🗎 110

Parameter overview with brief description

Parameter	Prerequisite	Description	Selection / User entry	Factory setting
Partially filled pipe detection	–	Select process variable for partially filled pipe detection.	▪ Off ▪ Density ▪ Calculated reference density	Density
Low value partial filled pipe detection	A process variable is selected in the **Assign process variable** parameter (→ 🗎 110).	Enter lower limit value for deactivating partialy filled pipe detection.	Signed floating-point number	Depends on country: ▪ 200 kg/m^3 ▪ 12.5 lb/ft^3
High value partial filled pipe detection	A process variable is selected in the **Assign process variable** parameter (→ 🗎 110).	Enter upper limit value for deactivating partialy filled pipe detection.	Signed floating-point number	Depends on country: ▪ 6000 kg/m^3 ▪ 374.6 lb/ft^3
Response time part. filled pipe detect.	A process variable is selected in the **Assign process variable** parameter (→ 🗎 110).	Use this function to enter the minimum time (hold time) the signal must be present before diagnostic message S962 "Pipe only partly filled" is triggered in the event of a partially filled or empty measuring pipe.	0 to 100 s	1 s

10.5 Advanced settings

Navigation
"Setup" menu → Advanced setup

▶ Advanced setup	
Enter access code	→ 📄 111
▶ Calculated values	→ 📄 112
▶ Sensor adjustment	→ 📄 113
▶ Totalizer 1 to n	→ 📄 119
▶ Custody transfer activation	→ 📄 123
▶ Custody transfer deactivation	→ 📄 121
▶ Display	→ 📄 125
▶ WLAN settings	→ 📄 130
▶ Viscosity	→ 📄 132
▶ Concentration	→ 📄 133
▶ Petroleum	→ 📄 133
▶ Heartbeat setup	→ 📄 133
▶ Configuration backup	→ 📄 135
▶ Administration	→ 📄 136

10.5.1 Using the parameter to enter the access code

Navigation
"Setup" menu → Advanced setup

Parameter overview with brief description

Parameter	Description	User entry
Enter access code	Enter access code to disable write protection of parameters.	Max. 16-digit character string comprising numbers, letters and special characters

10.5.2 Calculated process variables

The **Calculated values** submenu contains parameters for calculating the corrected volume flow.

The **Calculated values** submenu is **not** available if one of the following options was selected in the **Petroleum mode** parameter in the "Application package", option **EJ** "Petroleum": **API referenced correction** option, **Net oil & water cut** option or **ASTM D4311** option

Navigation
"Setup" menu → Advanced setup → Calculated values

▶ **Calculated values**		
	▶ **Corrected volume flow calculation**	→ 📄 112

"Corrected volume flow calculation" submenu

Navigation
"Setup" menu → Advanced setup → Calculated values → Corrected volume flow calculation

▶ **Corrected volume flow calculation**		
	Select reference density	→ 📄 112
	External reference density	→ 📄 112
	Fixed reference density	→ 📄 113
	Reference temperature	→ 📄 113
	Linear expansion coefficient	→ 📄 113
	Square expansion coefficient	→ 📄 113

Parameter overview with brief description

Parameter	Prerequisite	Description	Selection / User interface / User entry	Factory setting
Select reference density	–	Select reference density for calculating the corrected volume flow.	▪ Fixed reference density ▪ Calculated reference density ▪ Current input 1 * ▪ Current input 2 *	Calculated reference density
External reference density	–	Shows external reference density.	Floating point number with sign	–

Parameter	Prerequisite	Description	Selection / User interface / User entry	Factory setting
Fixed reference density	The **Fixed reference density** option is selected in the **Corrected volume flow calculation** parameter parameter.	Enter fixed value for reference density.	Positive floating-point number	1 kg/Nl
Reference temperature	The **Calculated reference density** option is selected in the **Corrected volume flow calculation** parameter parameter.	Enter reference temperature for calculating the reference density.	−273.15 to 99 999 °C	Country-specific: ▪ +20 °C ▪ +68 °F
Linear expansion coefficient	The **Calculated reference density** option is selected in the **Corrected volume flow calculation** parameter parameter.	Enter linear, medium-specific expansion coefficient for calculating the reference density.	Signed floating-point number	0.0 1/K
Square expansion coefficient	The **Calculated reference density** option is selected in the **Corrected volume flow calculation** parameter parameter.	For media with a non-linear expansion pattern: enter the quadratic, medium-specific expansion coefficient for calculating the reference density.	Signed floating-point number	0.0 $1/K^2$

* Visibility depends on order options or device settings

10.5.3 Carrying out a sensor adjustment

The **Sensor adjustment** submenu contains parameters that pertain to the functionality of the sensor.

Navigation

"Setup" menu → Advanced setup → Sensor adjustment

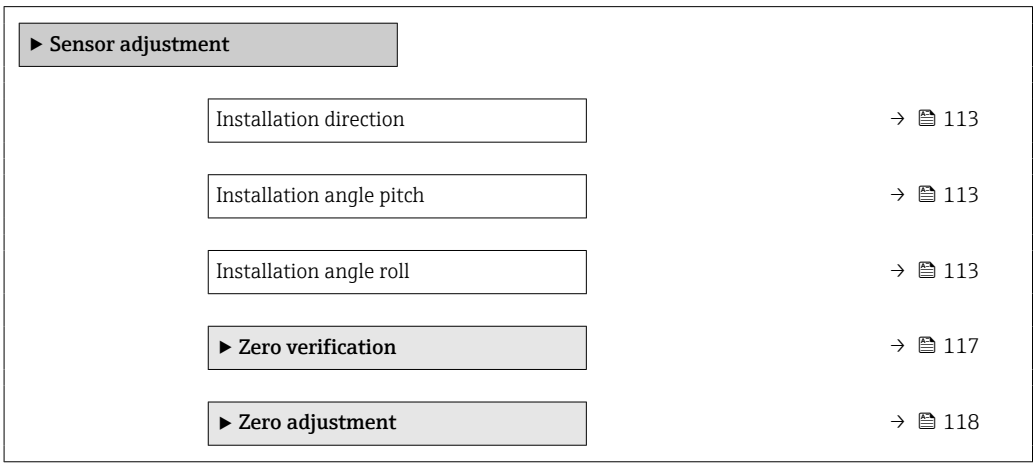

Parameter overview with brief description

Parameter	Description	Selection / User entry	Factory setting
Installation direction	Select sign of flow direction.	▪ Forward flow ▪ Reverse flow	Forward flow
Installation angle pitch	Enter the installation angle in degree.	−90 to +90 °	0 °
Installation angle roll	Enter the installation angle in degree.	−180 to 180 °	0 °

Density adjustment

With density adjustment, a high level of accuracy is achieved only at the point of adjustment and at the relevant density and temperature. However, the accuracy of a density adjustment is only ever as good as the quality of the reference measuring data provided. Therefore it is not a substitute for special density calibration.

Performing density adjustment

Note the following before performing the adjustment:
- A density adjustment only makes sense if there is little variation in the operating conditions and the density adjustment is performed under the operating conditions.
- The density adjustment scales the internally computed density value with a user-specific slope and offset.
- A 1-point or 2-point density adjustment can be performed.
- For a 2-point density adjustment, there must be a difference of at least 0.2 kg/l between the two target density values.
- The reference media must be gas-free or pressurized so that any gas they contain is compressed.
- The reference density measurements must be performed at the same medium temperature that prevails in the process, as otherwise the density adjustment will not be accurate.
- The correction resulting from the density adjustment can be deleted with the **Restore original** option.

"1 point adjustment" option

1. In the **Density adjustment mode** parameter, select the **1 point adjustment** option and confirm.
2. In the **Density setpoint 1** parameter, enter the density value and confirm.
   ↳ In the **Execute density adjustment** parameter the following options are now available:
   Ok
   Measure density 1 option
   Restore original
3. Select the **Measure density 1** option and confirm.
4. If 100% was reached in the **Progress** parameter on the display and the **Ok** option is displayed in the **Execute density adjustment** parameter, then confirm.
   ↳ In the **Execute density adjustment** parameter the following options are now available:
   Ok
   Calculate
   Cancel
5. Select the **Calculate** option and confirm.

If the adjustment was completed successfully, the **Density adjustment factor** parameter and the **Density adjustment offset** parameter and the values calculated for them are shown on the display.

"2 point adjustment" option

1. In the **Density adjustment mode** parameter, select the **2 point adjustment** option and confirm.
2. In the **Density setpoint 1** parameter, enter the density value and confirm.

3. In the **Density setpoint 2** parameter, enter the density value and confirm.
   ↳ In the **Execute density adjustment** parameter the following options are now available:
   Ok
   Measure density 1
   Restore original
4. Select the **Measure density 1** option and confirm.
   ↳ In the **Execute density adjustment** parameter the following options are now available:
   Ok
   Measure density 2
   Restore original
5. Select the **Measure density 2** option and confirm.
   ↳ In the **Execute density adjustment** parameter the following options are now available:
   Ok
   Calculate
   Cancel
6. Select the **Calculate** option and confirm.

If the **Density adjust failure** option is displayed in the **Execute density adjustment** parameter, call up the options and select the **Cancel** option. The density adjustment is canceled and can be repeated.

If the adjustment was completed successfully, the **Density adjustment factor** parameter and the **Density adjustment offset** parameter and the values calculated for them are shown on the display.

Navigation
"Expert" menu → Sensor → Sensor adjustment → Density adjustment

▶ Density adjustment	
Density adjustment mode	→ 116
Density setpoint 1	→ 116
Density setpoint 2	→ 116
Execute density adjustment	→ 116
Progress	→ 116
Density adjustment factor	→ 116
Density adjustment offset	→ 116

Parameter overview with brief description

Parameter	Prerequisite	Description	Selection / User entry / User interface	Factory setting
Density adjustment mode	–	Select the method for field density adjustment to correct the factory setting.	▪ 1 point adjustment ▪ 2 point adjustment	1 point adjustment
Density setpoint 1	–	Enter density for the first reference media.	The entry depends on the unit selected in the **Density unit** parameter (0555).	1 000 kg/m³
Density setpoint 2	In the **Density adjustment mode** parameter, the **2 point adjustment** option is selected.	Enter density for the second reference media.	The entry depends on the unit selected in the **Density unit** parameter (0555).	1 000 kg/m³
Execute density adjustment	–	Select the next step to be performed for the density adjustment.	▪ Cancel * ▪ Busy * ▪ Ok * ▪ Density adjust failure * ▪ Measure density 1 * ▪ Measure density 2 * ▪ Calculate * ▪ Restore original *	Ok
Progress	–	Shows the progress of the process.	0 to 100 %	–
Density adjustment factor	–	Shows the calculated correction factor for the density.	Signed floating-point number	1
Density adjustment offset	–	Shows the calculated correction offset for the density.	Signed floating-point number	0

* Visibility depends on order options or device settings

Zero verification and zero adjustment

All measuring instruments are calibrated in accordance with state-of-the-art technology. Calibration takes place under reference conditions → 📄 207. Therefore, a zero adjustment in the field is generally not required.

Experience shows that zero adjustment is advisable only in special cases:
- To achieve maximum measurement accuracy even with low flow rates.
- Under extreme process or operating conditions (e.g. very high process temperatures or very high-viscosity media).
- For gas applications with low pressure.

ℹ To achieve the highest possible measurement accuracy at low flow rates, the installation must protect the sensor from mechanical stress during operation.

To get a representative zero point, ensure that:
- any flow in the device is prevented during the adjustment
- the process conditions (e.g. pressure, temperature) are stable and representative

Zero verification and zero adjustment cannot be performed if the following process conditions are present:

- Gas pockets
  Ensure that the system has been sufficiently flushed with the medium. Repeat flushing can help to eliminate gas pockets
- Thermal circulation
  In the event of temperature differences (e.g. between the measuring tube inlet and outlet section), induced flow can occur even if the valves are closed due to thermal circulation in the device
- Leaks at the valves
  If the valves are not leak-tight, flow is not sufficiently prevented when determining the zero point

If these conditions cannot be avoided, it is advisable to keep the factory setting for the zero point.

Zero point verification

The zero point can be verified with the **Zero verification** wizard.

Navigation
"Setup" menu → Advanced setup → Sensor adjustment → Zero verification

▶ Zero verification	
Process conditions	→ 📄 117
Progress	→ 📄 117
Status	→ 📄 118
Additional information	→ 📄 118
Recommendation:	→ 📄 118
Root cause	→ 📄 118
Abort cause	→ 📄 118
Zero point measured	→ 📄 118
Zero point standard deviation	→ 📄 118

Parameter overview with brief description

Parameter	Description	Selection / User interface	Factory setting
Process conditions	Ensure process conditions as follows.	▪ Tubes are completely filled ▪ Process operational pressure applied ▪ No-flow conditions (closed valves) ▪ Process and ambient temperatures stable	–
Progress	Shows the progress of the process.	0 to 100 %	–

Parameter	Description	Selection / User interface	Factory setting
Status	Shows the status of the process.	▪ Busy ▪ Failed ▪ Done	–
Additional information	Indicate whether to display additional information.	▪ Hide ▪ Show	Hide
Recommendation:	Indicates whether an adjustment is recommended. Only recommended if the measured zero point deviates significantly from the current zero point.	▪ Do not adjust zero point ▪ Adjust zero point	–
Abort cause	Indicates why the wizard was aborted.	▪ Check process conditions! ▪ A technical issue has occurred	–
Root cause	Shows the diagnostic and remedy.	▪ Zero point too high. Ensure no-flow. ▪ Zero point is unstable. Ensure no-flow. ▪ Fluctuation high. Avoid 2-phase medium.	–
Zero point measured	Shows the zero point measured for the adjustment.	Signed floating-point number	–
Zero point standard deviation	Shows the standard deviation of the zero point measured.	Positive floating-point number	–

Zero adjust

The zero point can be adjusted with the **Zero adjustment** wizard.

- A zero point verification should be performed before a zero adjustment.
- The zero point can also be adjusted manually: Expert → Sensor → Calibration

Navigation
"Setup" menu → Advanced setup → Sensor adjustment → Zero adjustment

▶ **Zero adjustment**

Process conditions	→ 119
Progress	→ 119
Status	→ 119
Root cause	→ 119
Abort cause	→ 119
Root cause	→ 119
Reliability of measured zero point	→ 119
Additional information	→ 119
Reliability of measured zero point	→ 119

Zero point measured	→ 119
Zero point standard deviation	→ 119
Select action	→ 119

Parameter overview with brief description

Parameter	Description	Selection / User interface	Factory setting
Process conditions	Ensure process conditions as follows.	▪ Tubes are completely filled ▪ Process operational pressure applied ▪ No-flow conditions (closed valves) ▪ Process and ambient temperatures stable	–
Progress	Shows the progress of the process.	0 to 100 %	–
Status	Shows the status of the process.	▪ Busy ▪ Failed ▪ Done	–
Abort cause	Indicates why the wizard was aborted.	▪ Check process conditions! ▪ A technical issue has occurred	–
Root cause	Shows the diagnostic and remedy.	▪ Zero point too high. Ensure no-flow. ▪ Zero point is unstable. Ensure no-flow. ▪ Fluctuation high. Avoid 2-phase medium.	–
Reliability of measured zero point	Indicates the reliability of the zero point measured.	▪ Not done ▪ Good ▪ Uncertain	–
Additional information	Indicate whether to display additional information.	▪ Hide ▪ Show	Hide
Zero point measured	Shows the zero point measured for the adjustment.	Signed floating-point number	–
Zero point standard deviation	Shows the standard deviation of the zero point measured.	Positive floating-point number	–
Select action	Select the zero point value to apply.	▪ Keep current zero point ▪ Apply zero point measured ▪ Apply factory zero point *	Keep current zero point

* Visibility depends on order options or device settings

10.5.4 Configuring the totalizer

In the **"Totalizer 1 to n" submenu**, you can configure the specific totalizer.

Navigation
"Setup" menu → Advanced setup → Totalizer 1 to n

▶ **Totalizer 1 to n**	
Assign process variable 1 to n	→ 120

Process variable unit 1 to n	→ 🗎 120
Totalizer 1 to n operation mode	→ 🗎 120
Totalizer 1 to n failure behavior	→ 🗎 120

Parameter overview with brief description

Parameter	Prerequisite	Description	Selection	Factory setting
Assign process variable 1 to n	–	Select process variable for totalizer.	▪ Off ▪ Mass flow ▪ Volume flow ▪ Corrected volume flow * ▪ Target mass flow * ▪ Carrier mass flow * ▪ Target volume flow * ▪ Carrier volume flow * ▪ Target corrected volume flow * ▪ Carrier corrected volume flow * ▪ GSV flow * ▪ GSV flow alternative * ▪ NSV flow * ▪ NSV flow alternative * ▪ S&W volume flow * ▪ Oil mass flow * ▪ Water mass flow * ▪ Oil volume flow * ▪ Water volume flow * ▪ Oil corrected volume flow * ▪ Water corrected volume flow * ▪ Raw value mass flow	Mass flow
Process variable unit 1 to n	A process variable is selected in the **Assign process variable** parameter (→ 🗎 120) of the **Totalizer 1 to n** submenu.	Select the unit for the process variable of the totalizer.	Unit choose list	Depends on country: ▪ kg ▪ lb
Totalizer 1 to n operation mode	A process variable is selected in the **Assign process variable** parameter (→ 🗎 120) of the **Totalizer 1 to n** submenu.	Select totalizer operation mode, e.g. only totalize forward flow or only totalize reverse flow.	▪ Net ▪ Forward ▪ Reverse	Net
Totalizer 1 to n failure behavior	A process variable is selected in the **Assign process variable** parameter (→ 🗎 120) of the **Totalizer 1 to n** submenu.	Select totalizer behavior in the event of a device alarm.	▪ Hold ▪ Continue ▪ Last valid value + continue	Hold

* Visibility depends on order options or device settings

10.5.5 "Custody transfer activation" wizard

In the **Display** submenu you can set all the parameters associated with the configuration of the local display.

Navigation
"Setup" menu → Advanced setup → Custody transfer deactivation

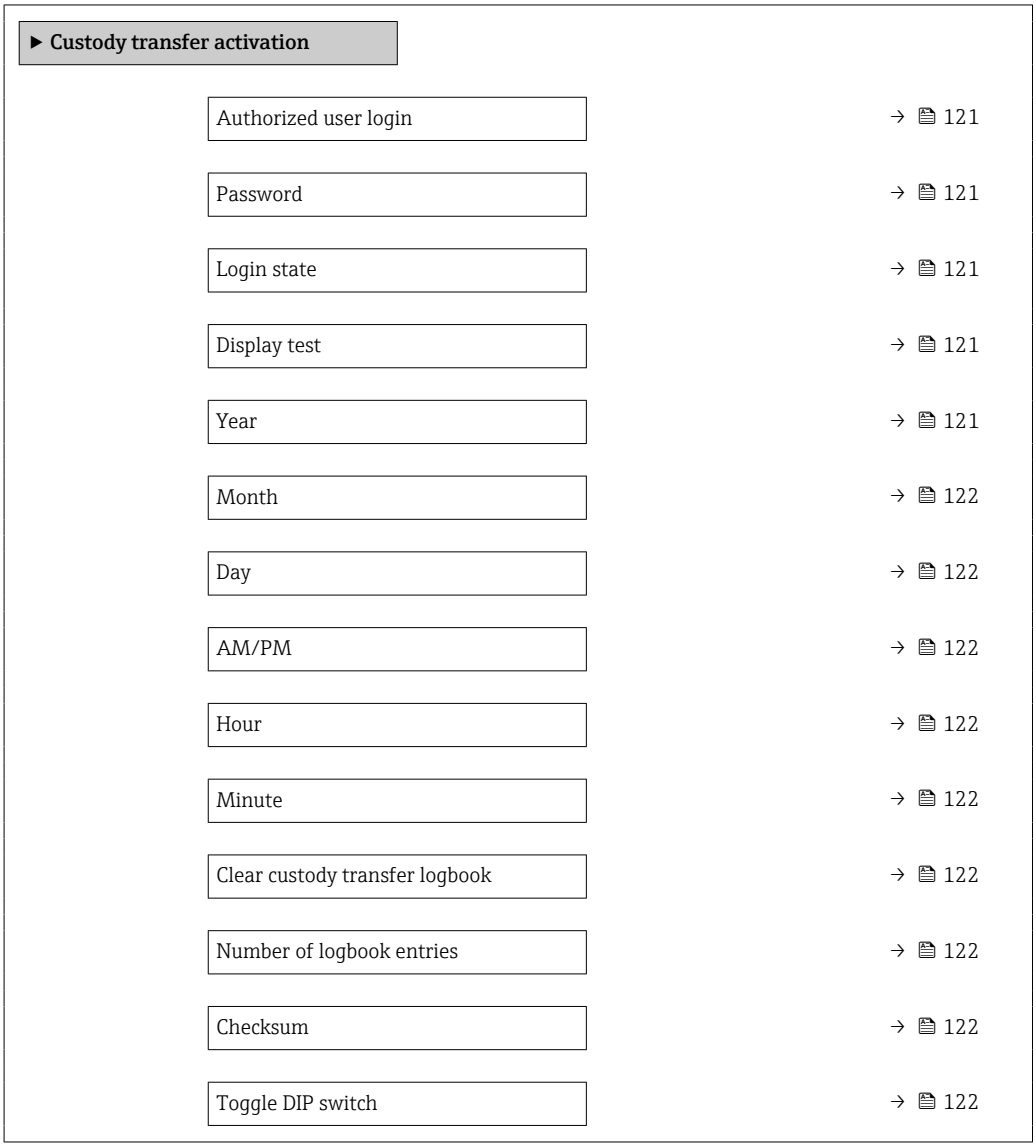

Parameter overview with brief description

Parameter	Description	User entry / User interface / Selection	Factory setting
Authorized user login	Enter a specified authorized user login.	Authorized user login	EH000
Password	Enter a specified password.	0 to 999 999	177 801
Login state	Display login status.	▪ Logged in ▪ Logged out	Logged out
Display test	Start or cancel display test.	▪ Cancel ▪ Start	Cancel
Year	Enter the year.	9 to 99	10

Parameter	Description	User entry / User interface / Selection	Factory setting
Month	Enter the month.	▪ January ▪ February ▪ March ▪ April ▪ May ▪ June ▪ July ▪ August ▪ September ▪ October ▪ November ▪ December	January
Day	Enter the day.	1 to 31 d	1 d
AM/PM	Select AM/PM.	▪ AM ▪ PM	AM
Hour	Enter the hour.	0 to 23 h	12 h
Minute	Enter the minutes.	0 to 59 min	0 min
Clear custody transfer logbook	Delete custody transfer logbook selection.	▪ Cancel ▪ Clear data	Cancel
Number of logbook entries	Display the recorded logbook entries.	0...30	0
Checksum	Shows the firmware's checksum.	Positive integer	–
Toggle DIP switch	Display the DIP switch status.	▪ Off ▪ On	Off

10.5.6 "Custody transfer deactivation" wizard

Navigation
"Setup" menu → Advanced setup → Custody transfer activation

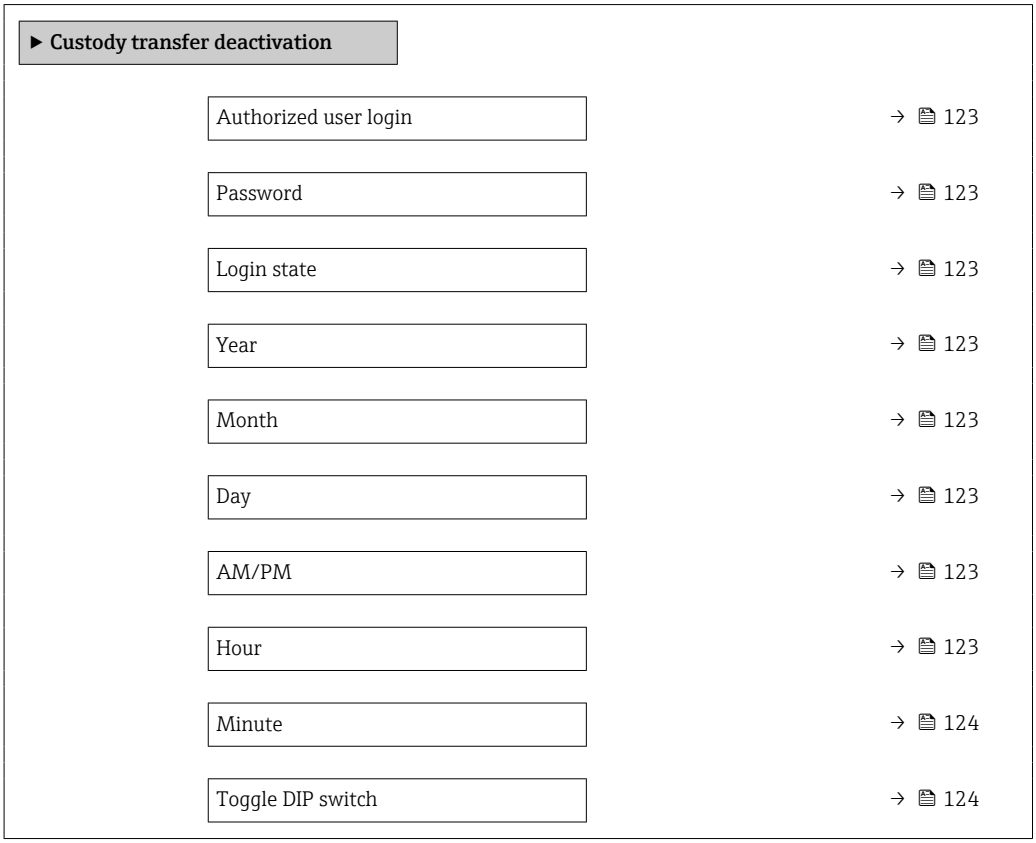

Parameter overview with brief description

Parameter	Description	User entry / User interface / Selection	Factory setting
Authorized user login	Enter a specified authorized user login.	Authorized user login	EH000
Password	Enter a specified password.	0 to 999 999	177 801
Login state	Display login status.	▪ Logged in ▪ Logged out	Logged out
Year	Enter the year.	9 to 99	10
Month	Enter the month.	▪ January ▪ February ▪ March ▪ April ▪ May ▪ June ▪ July ▪ August ▪ September ▪ October ▪ November ▪ December	January
Day	Enter the day.	1 to 31 d	1 d
AM/PM	Select AM/PM.	▪ AM ▪ PM	AM
Hour	Enter the hour.	0 to 23 h	12 h

Parameter	Description	User entry / User interface / Selection	Factory setting
Minute	Enter the minutes.	0 to 59 min	0 min
Toggle DIP switch	Display the DIP switch status.	▪ Off ▪ On	Off

10.5.7 Carrying out additional display configurations

In the **Display** submenu you can set all the parameters associated with the configuration of the local display.

Navigation
"Setup" menu → Advanced setup → Display

▶ **Display**		
	▶ **Display 1**	→ 📄 103
	▶ **Display 2**	→ 📄 103
	▶ **Display 3**	→ 📄 103

Parameter overview with brief description

Parameter	Prerequisite	Description	Selection / User entry	Factory setting
Format display	A local display is provided.	Select how measured values are shown on the display.	▪ 1 value, max. size ▪ 1 bargraph + 1 value ▪ 2 values ▪ 1 value large + 2 values ▪ 4 values	1 value, max. size

Parameter	Prerequisite	Description	Selection / User entry	Factory setting
Value 1 display	A local display is provided.	Select the measured value that is shown on the local display.	▪ Mass flow ▪ Volume flow ▪ Corrected volume flow * ▪ Density ▪ Reference density * ▪ Temperature ▪ Pressure ▪ Totalizer 1 ▪ Totalizer 2 ▪ Totalizer 3 ▪ GSV flow * ▪ GSV flow alternative * ▪ NSV flow * ▪ NSV flow alternative * ▪ S&W volume flow * ▪ Reference density alternative * ▪ Weighted density average * ▪ Weighted temperature average * ▪ Water cut * ▪ Oil density * ▪ Water density * ▪ Oil mass flow * ▪ Water mass flow * ▪ Oil volume flow * ▪ Water volume flow * ▪ Oil corrected volume flow * ▪ Water corrected volume flow * ▪ Concentration * ▪ Target mass flow * ▪ Carrier mass flow * ▪ Target volume flow * ▪ Carrier volume flow * ▪ Target corrected volume flow * ▪ Carrier corrected volume flow * ▪ Application specific output 0 * ▪ Application specific output 1 * ▪ Inhomogeneous medium index ▪ Suspended bubbles index * ▪ HBSI * ▪ Raw value mass flow ▪ Exciter current 0 ▪ Oscillation damping 0 ▪ Oscillation damping fluctuation 0 * ▪ Oscillation frequency 0	Mass flow

Parameter	Prerequisite	Description	Selection / User entry	Factory setting
			▪ Frequency fluctuation 0 * ▪ Oscillation amplitude 0 * ▪ Signal asymmetry ▪ Torsion signal asymmetry * ▪ Carrier pipe temperature * ▪ Electronics temperature ▪ Sensor index coil asymmetry ▪ Test point 0 ▪ Test point 1 ▪ Current output 1 ▪ Current output 2 * ▪ Current output 3 *	
0% bargraph value 1	A local display is provided.	Enter 0 % value for bar graph display.	Signed floating-point number	Country-specific: ▪ 0 kg/h ▪ 0 lb/min
100% bargraph value 1	A local display is provided.	Enter 100 % value for bar graph display.	Signed floating-point number	Depends on country and nominal diameter
Decimal places 1	A measured value is specified in the **Value 1 display** parameter.	Select the number of decimal places for the display value.	▪ x ▪ x.x ▪ x.xx ▪ x.xxx ▪ x.xxxx ▪ x.xxxxx ▪ x.xxxxxx	x.xx
Value 2 display	A local display is provided.	Select the measured value that is shown on the local display.	For the picklist, see **Value 1 display** parameter (→ 🗎 106)	None
Decimal places 2	A measured value is specified in the **Value 2 display** parameter.	Select the number of decimal places for the display value.	▪ x ▪ x.x ▪ x.xx ▪ x.xxx ▪ x.xxxx ▪ x.xxxxx ▪ x.xxxxxx	x.xx
Value 3 display	A local display is provided.	Select the measured value that is shown on the local display.	For the picklist, see **Value 1 display** parameter (→ 🗎 106)	None
0% bargraph value 3	A selection was made in the **Value 3 display** parameter.	Enter 0 % value for bar graph display.	Signed floating-point number	Country-specific: ▪ 0 kg/h ▪ 0 lb/min
100% bargraph value 3	A selection was made in the **Value 3 display** parameter.	Enter 100 % value for bar graph display.	Signed floating-point number	0
Decimal places 3	A measured value is specified in the **Value 3 display** parameter.	Select the number of decimal places for the display value.	▪ x ▪ x.x ▪ x.xx ▪ x.xxx ▪ x.xxxx ▪ x.xxxxx ▪ x.xxxxxx	x.xx
Value 4 display	A local display is provided.	Select the measured value that is shown on the local display.	For the picklist, see **Value 1 display** parameter (→ 🗎 106)	None

Parameter	Prerequisite	Description	Selection / User entry	Factory setting
Decimal places 4	A measured value is specified in the **Value 4 display** parameter.	Select the number of decimal places for the display value.	▪ x ▪ x.x ▪ x.xx ▪ x.xxx ▪ x.xxxx ▪ x.xxxxx ▪ x.xxxxxx	x.xx
Value 5 display	A local display is provided.	Select the measured value that is shown on the local display.	For the picklist, see **Value 1 display** parameter (→ 🗎 106)	None
0% bargraph value 5	An option was selected in the **Value 5 display** parameter.	Enter 0 % value for bar graph display.	Signed floating-point number	Depends on country: ▪ 0 kg/h ▪ 0 lb/min
100% bargraph value 5	An option was selected in the **Value 5 display** parameter.	Enter 100 % value for bar graph display.	Signed floating-point number	0
Decimal places 5	A measured value is specified in the **Value 5 display** parameter.	Select the number of decimal places for the display value.	▪ x ▪ x.x ▪ x.xx ▪ x.xxx ▪ x.xxxx ▪ x.xxxxx ▪ x.xxxxxx	x.xx
Value 6 display	A local display is provided.	Select the measured value that is shown on the local display.	For the picklist, see **Value 1 display** parameter (→ 🗎 106)	None
Decimal places 6	A measured value is specified in the **Value 6 display** parameter.	Select the number of decimal places for the display value.	▪ x ▪ x.x ▪ x.xx ▪ x.xxx ▪ x.xxxx ▪ x.xxxxx ▪ x.xxxxxx	x.xx
Value 7 display	A local display is provided.	Select the measured value that is shown on the local display.	For the picklist, see **Value 1 display** parameter (→ 🗎 106)	None
0% bargraph value 7	An option was selected in the **Value 7 display** parameter.	Enter 0 % value for bar graph display.	Signed floating-point number	Depends on country: ▪ 0 kg/h ▪ 0 lb/min
100% bargraph value 7	An option was selected in the **Value 7 display** parameter.	Enter 100 % value for bar graph display.	Signed floating-point number	0
Decimal places 7	A measured value is specified in the **Value 7 display** parameter.	Select the number of decimal places for the display value.	▪ x ▪ x.x ▪ x.xx ▪ x.xxx ▪ x.xxxx ▪ x.xxxxx ▪ x.xxxxxx	x.xx
Value 8 display	A local display is provided.	Select the measured value that is shown on the local display.	For the picklist, see **Value 1 display** parameter (→ 🗎 106)	None

Parameter	Prerequisite	Description	Selection / User entry	Factory setting
Decimal places 8	A measured value is specified in the **Value 8 display** parameter.	Select the number of decimal places for the display value.	▪ x ▪ x.x ▪ x.xx ▪ x.xxx ▪ x.xxxx ▪ x.xxxxx ▪ x.xxxxxx	x.xx
Display language	A local display is provided.	Set display language.	▪ English ▪ Deutsch ▪ Français ▪ Español ▪ Italiano ▪ Nederlands ▪ Portuguesa ▪ Polski ▪ русский язык (Russian) ▪ Svenska ▪ Türkçe ▪ 中文 (Chinese) ▪ 日本語 (Japanese) ▪ 한국어 (Korean) ▪ tiếng Việt (Vietnamese) * ▪ čeština (Czech)	English (alternatively, the ordered language is preset in the device)
Display interval	A local display is provided.	Set time measured values are shown on display if display alternates between values.	1 to 10 s	5 s
Display damping	A local display is provided.	Set display reaction time to fluctuations in the measured value.	0.0 to 999.9 s	0.0 s
Header	A local display is provided.	Select header contents on local display.	▪ Device tag ▪ Free text	Device tag
Header text	The **Free text** option is selected in the **Header** parameter.	Enter display header text.	Max. 12 characters, such as letters, numbers or special characters (e.g. @, %, /)	----------
Separator	A local display is provided.	Select decimal separator for displaying numerical values.	▪ . (point) ▪ , (comma)	. (point)
Backlight	One of the following conditions is met: ▪ Order code for "Display; operation", option **F** "4-line, illum.; touch control" ▪ Order code for "Display; operation", option **G** "4-line, illum.; touch control +WLAN" ▪ Order code for "Display; operation", option **O** "Remote display 4-line illuminated; 10m/30ft cable; touch control"	Switch the local display backlight on and off.	▪ Disable ▪ Enable	Enable

* Visibility depends on order options or device settings

10.5.8 WLAN configuration

The **WLAN Settings** submenu guides the user systematically through all the parameters that have to be set for the WLAN configuration.

Navigation
"Setup" menu → Advanced setup → WLAN settings

▶ WLAN settings	
WLAN	→ 131
WLAN mode	→ 131
SSID name	→ 131
Network security	→ 132
Security identification	→ 132
User name	→ 132
WLAN password	→ 132
WLAN IP address	→ 132
WLAN MAC address	→ 132
WLAN passphrase	→ 132
WLAN MAC address	→ 132
Assign SSID name	→ 132
SSID name	→ 132
Connection state	→ 132
Received signal strength	→ 132

Parameter overview with brief description

Parameter	Prerequisite	Description	Selection / User entry / User interface	Factory setting
WLAN	–	Switch WLAN on and off.	▪ Disable ▪ Enable	Enable
WLAN mode	–	Select WLAN mode.	▪ WLAN access point ▪ WLAN Client	WLAN access point
SSID name	The client is activated.	Enter the user-defined SSID name (max. 32 characters).	–	–

Parameter	Prerequisite	Description	Selection / User entry / User interface	Factory setting
Network security	–	Select the security type of the WLAN network.	▪ Unsecured ▪ WPA2-PSK ▪ EAP-PEAP with MSCHAPv2 * ▪ EAP-PEAP MSCHAPv2 no server authentic. * ▪ EAP-TLS *	WPA2-PSK
Security identification	–	Select security settings and download these settings via menu Data management > Security > WLAN.	▪ Trusted issuer certificate ▪ Device certificate ▪ Device private key	–
User name	–	Enter user name.	–	–
WLAN password	–	Enter WLAN password.	–	–
WLAN IP address	–	Enter IP address of the WLAN interface of the device.	4 octet: 0 to 255 (in the particular octet)	192.168.1.212
WLAN MAC address	–	Enter MAC address of the WLAN interface of the device.	Unique 12-digit character string comprising letters and numbers	Each measuring device is given an individual address.
WLAN passphrase	The **WPA2-PSK** option is selected in the **Security type** parameter.	Enter the network key (8 to 32 characters). The network key supplied with the device should be changed during commissioning for security reasons.	8 to 32-digit character string comprising numbers, letters and special characters (without spaces)	Serial number of the measuring device (e.g. L100A802000)
Assign SSID name	–	Select which name will be used for SSID: device tag or user-defined name.	▪ Device tag ▪ User-defined	User-defined
SSID name	▪ The **User-defined** option is selected in the **Assign SSID name** parameter. ▪ The **WLAN access point** option is selected in the **WLAN mode** parameter.	Enter the user-defined SSID name (max. 32 characters). The user-defined SSID name may only be assigned once. If the SSID name is assigned more than once, the devices can interfere with one another.	Max. 32-digit character string comprising numbers, letters and special characters	EH_device designation_last 7 digits of the serial number (e.g. EH_Promass_300_A 802000)
Connection state	–	Displays the connection status.	▪ Connected ▪ Not connected	Not connected
Received signal strength	–	Shows the received signal strength.	▪ Low ▪ Medium ▪ High	High

* Visibility depends on order options or device settings

10.5.9 Viscosity application package

For detailed information on the parameter descriptions for the Viscosity application package, see the Special Documentation for the device → 233

Navigation
"Setup" menu → Advanced setup → Viscosity

10.5.10 Concentration Measurement application package

For detailed information on the parameter descriptions for the Concentration application package, see the Special Documentation for the device → 🗎 233

Navigation
"Setup" menu → Advanced setup → Concentration

10.5.11 Petroleum application package

For detailed information on the parameter descriptions for the Petroleum application package, see the Special Documentation for the device → 🗎 233

Navigation
"Setup" menu → Advanced setup → Petroleum

10.5.12 Heartbeat Technology application package

For detailed information on the parameter descriptions for the application package, see the Special Documentation for the device → 🗎 233

Navigation
"Setup" menu → Advanced setup → Heartbeat setup

▶ **Heartbeat setup**		
	▶ **Heartbeat base settings**	→ 🗎 133
	▶ **Heartbeat Monitoring**	→ 🗎 134

Performing Heartbeat Technology basic setup

Heartbeat setup submenu guides the user systematically through all the parameters that can be used for the Heartbeat Technology basic setup.

The Heartbeat Technology verification wizard only appears if the device has the Heartbeat Verification+Monitoring application package.

"Heartbeat base settings" submenu

Navigation
"Setup" menu → Advanced setup → Heartbeat setup → Heartbeat base settings

▶ **Heartbeat base settings**		
	Plant operator	→ 🗎 134
	Location	→ 🗎 134

Parameter overview with brief description

Parameter	Description	Selection / User entry	Factory setting
Record application reference data	Record the actual device values as reference basis for monitoring and verification.	▪ Cancel ▪ Start	Cancel
Record application reference data	Record the actual device values as reference basis for monitoring and verification.	▪ Cancel ▪ Start	Cancel
Plant operator	Enter the plant operator.	Max. 32 characters such as letters, numbers or special characters (e.g. @, %, /)	–
Location	Enter the location.	Max. 32 characters such as letters, numbers or special characters (e.g. @, %, /)	–

Heartbeat Verification

Navigation

"Setup" menu → Advanced setup → Heartbeat setup → Heartbeat Verification

▶ **Heartbeat Verification**

Parameter overview with brief description

Parameter	Description	Selection	Factory setting
Select reference data	Choose which data are used as reference data.	▪ Application data * ▪ Factory air calibration * ▪ Factory water calibration * ▪ No reference data available *	Factory water calibration

* Visibility depends on order options or device settings

Heartbeat Monitoring

Navigation

"Setup" menu → Advanced setup → Heartbeat setup → Heartbeat Monitoring

▶ **Heartbeat Monitoring**

Activate monitoring → 📄 135

HBSI cycle time → 📄 135

Parameter overview with brief description

Parameter	Prerequisite	Description	Selection / User entry	Factory setting
Activate monitoring	–	Activate monitoring to enable cyclic transmission of the HBSI measured value.	▪ Off ▪ Time-controlled HBSI ▪ Continuous HBSI	Off
HBSI cycle time	In the **Activate monitoring** parameter, the **Time-controlled HBSI** option is selected.	This parameter can be used to set the cycle time for determining the HBSI measured value.	0.5 to 4 320 h	12 h

10.5.13 Configuration management

After commissioning, you can save the current device configurationor restore the previous device configuration. The device configuration is managed via the **Configuration management** parameter.

Navigation

"Setup" menu → Advanced setup → Configuration backup

▶ Configuration backup	
Operating time	→ 📄 135
Last backup	→ 📄 135
Configuration management	→ 📄 135
Backup state	→ 📄 136
Comparison result	→ 📄 136

Parameter overview with brief description

Parameter	Description	User interface / Selection	Factory setting
Operating time	Indicates how long the device has been in operation.	Days (d), hours (h), minutes (m) and seconds (s)	–
Last backup	Shows when the last data backup was saved to HistoROM backup.	Days (d), hours (h), minutes (m) and seconds (s)	–
Configuration management	Select action for managing the device data in the HistoROM backup.	▪ Cancel ▪ Execute backup ▪ Restore * ▪ Compare * ▪ Clear backup data	Cancel

Parameter	Description	User interface / Selection	Factory setting
Backup state	Shows the current status of data saving or restoring.	▪ None ▪ Backup in progress ▪ Restoring in progress ▪ Delete in progress ▪ Compare in progress ▪ Restoring failed ▪ Backup failed	None
Comparison result	Comparison of current device data with HistoROM backup.	▪ Settings identical ▪ Settings not identical ▪ No backup available ▪ Backup settings corrupt ▪ Check not done ▪ Dataset incompatible	Check not done

* Visibility depends on order options or device settings

Function range of "Configuration management" parameter

Options	Description
Cancel	No action is executed and the user exits the parameter.
Execute backup	A backup copy of the current device configuration is saved from the HistoROM backup to the memory of the device. The backup copy includes the transmitter data of the device.
Restore	The last backup copy of the device configuration is restored from the display module from the device memory to the device's HistoROM backup. The backup copy includes the transmitter data of the device.
Compare	The device configuration saved in the device memory is compared with the current device configuration of the HistoROM backup.
Clear backup data	The backup copy of the device configuration is deleted from the memory of the device.

HistoROM backup
A HistoROM is a "non-volatile" device memory in the form of an EEPROM.

While this action is in progress, the configuration cannot be edited via the local display and a message on the processing status appears on the display.

10.5.14 Using parameters for device administration

The **Administration** submenu systematically guides the user through all the parameters that can be used for device administration purposes.

Navigation

"Setup" menu → Advanced setup → Administration

▶ **Administration**	
▶ **Define access code**	→ 137
▶ **Reset access code**	→ 137
Device reset	→ 138

Using the parameter to define the access code

Complete this wizard to specify an access code for the Maintenance role.

Navigation
"Setup" menu → Advanced setup → Administration → Define access code

▶ Define access code	
Define access code	→ 📄 137
Confirm access code	→ 📄 137

Parameter overview with brief description

Parameter	Description	User entry
Define access code	Specify an access code that is required to obtain the access rights for the Maintenance role.	Max. 16-digit character string comprising numbers, letters and special characters
Confirm access code	Confirm the access code entered for the Maintenance role.	Max. 16-digit character string comprising numbers, letters and special characters

Using the parameter to reset the access code

Navigation
"Setup" menu → Advanced setup → Administration → Reset access code

▶ Reset access code	
Operating time	→ 📄 137
Reset access code	→ 📄 137

Parameter overview with brief description

Parameter	Description	User interface / User entry	Factory setting
Operating time	Indicates how long the device has been in operation.	Days (d), hours (h), minutes (m) and seconds (s)	–
Reset access code	Enter the code provided by Endress+Hauser Technical Support to reset the Maintenance code. ℹ For a reset code, contact your Endress+Hauser service organization. The reset code can only be entered via: ▪ Web browser ▪ DeviceCare, FieldCare (via CDI-RJ45 service interface) ▪ Fieldbus	Character string comprising numbers, letters and special characters	0x00

Using the parameter to reset the device

Navigation
"Setup" menu → Advanced setup → Administration

Parameter overview with brief description

Parameter	Description	Selection	Factory setting
Device reset	Reset the device configuration - either entirely or in part - to a defined state.	▪ Cancel ▪ To delivery settings ▪ Restart device ▪ Restore S-DAT backup *	Cancel

* Visibility depends on order options or device settings

10.6 Simulation

Via the **Simulation** submenu, it is possible to simulate various process variables in the process and the device alarm mode and verify downstream signal chains (switching valves or closed-control loops). The simulation can be performed without a real measurement (no flow of medium through the device).

Navigation
"Diagnostics" menu → Simulation

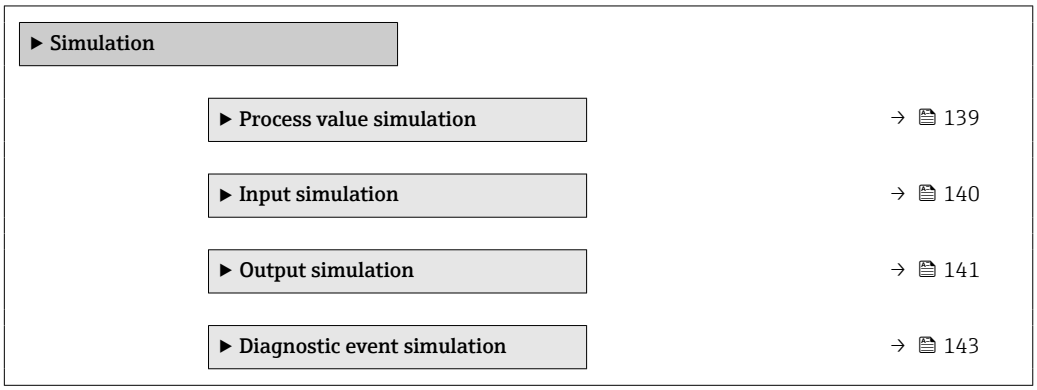

Parameter overview with brief description

Parameter	Prerequisite	Description	Selection / User entry	Factory setting
Input signal level	In the **Simulation status input** parameter, the **On** option is selected.	Select the signal level for the simulation of the status input.	▪ High ▪ Low	High
Current input simulation	–	Switch simulation of the current input on and off.	▪ Off ▪ On	Off
Value current input	In the **Current input 1 to n simulation** parameter, the **On** option is selected.	Enter the current value for simulation.	0 to 22.5 mA	0 mA
Current output simulation	–	Switch the simulation of the current output on and off.	▪ Off ▪ On	Off
Current output value	In the **Current output 1 to n simulation** parameter, the **On** option is selected.	Enter the current value for simulation.	3.59 to 22.5 mA	3.59 mA

Parameter	Prerequisite	Description	Selection / User entry	Factory setting
Frequency output simulation	In the **Operating mode** parameter, the **Frequency** option is selected.	Switch the simulation of the frequency output on and off.	▪ Off ▪ On	Off
Frequency output value	In the **Frequency simulation 1 to n** parameter, the **On** option is selected.	Enter the frequency value for the simulation.	0.0 to 12 500.0 Hz	0.0 Hz
Pulse output simulation	In the **Operating mode** parameter, the **Pulse** option is selected.	Set and switch off the pulse output simulation. For **Fixed value** option: **Pulse width** parameter (→ 97) defines the pulse width of the pulses output.	▪ Off ▪ Fixed value ▪ Down-counting value	Off
Pulse value	In the **Pulse output simulation 1 to n** parameter, the **Down-counting value** option is selected.	Enter the number of pulses for simulation.	0 to 65 535	0
Switch output simulation	In the **Operating mode** parameter, the **Switch** option is selected.	Switch the simulation of the switch output on and off.	▪ Off ▪ On	Off
Switch state	–	Select the status of the status output for the simulation.	▪ Open ▪ Closed	Open
Relay output simulation	–	Switch simulation of the relay output on and off.	▪ Off ▪ On	Off
Switch state	The **On** option is selected in the **Switch output simulation 1 to n** parameter parameter.	Select status of the relay output for the simulation.	▪ Open ▪ Closed	Open
Pulse output simulation	–	Set and switch off the pulse output simulation. For **Fixed value** option: **Pulse width** parameter defines the pulse width of the pulses output.	▪ Off ▪ Fixed value ▪ Down-counting value	Off
Pulse value	In the **Pulse output simulation** parameter, the **Down-counting value** option is selected.	Set and switch off the pulse output simulation.	0 to 65 535	0

10.6.1 Process value simulation

Navigation
"Diagnostics" menu → Simulation → Process value simulation

▶ **Process value simulation**

Process variable simulation	→ 140
Process value	→ 140

Parameter overview with brief description

Parameter	Prerequisite	Description	Selection / User entry	Factory setting
Process variable simulation	–	Select a process variable for the simulation process that is activated.	▪ Off ▪ Mass flow ▪ Volume flow ▪ Corrected volume flow * ▪ Target mass flow * ▪ Carrier mass flow * ▪ Target volume flow * ▪ Carrier volume flow * ▪ Target corrected volume flow * ▪ Carrier corrected volume flow * ▪ Density ▪ Reference density * ▪ Reference density alternative * ▪ GSV flow * ▪ GSV flow alternative * ▪ NSV flow * ▪ NSV flow alternative * ▪ S&W volume flow * ▪ Water cut * ▪ Oil density * ▪ Water density * ▪ Oil mass flow * ▪ Water mass flow * ▪ Oil volume flow * ▪ Water volume flow * ▪ Oil corrected volume flow * ▪ Water corrected volume flow * ▪ Temperature ▪ Concentration * ▪ Time period signal frequency (TPS) *	Off
Process value	A process variable is selected in the **Assign simulation process variable** parameter (→ 🗎 140).	Enter the simulation value for the selected process variable.	Depends on the process variable selected	0

* Visibility depends on order options or device settings

10.6.2 Simulation input

Navigation

"Diagnostics" menu → Simulation → Input simulation

▶ **Input simulation**	
Current input 1 to n simulation	→ 🗎 141

Value current input 1 to n	→ 141
Status input simulation	→ 141
Input signal level	→ 141

Parameter overview with brief description

Parameter	Prerequisite	Description	Selection / User entry	Factory setting
Current input 1 to n simulation	–	Switch simulation of the current input on and off.	▪ Off ▪ On	Off
Value current input 1 to n	In the **Current input 1 to n simulation** parameter, the **On** option is selected.	Enter the current value for simulation.	0 to 22.5 mA	0 mA
Status input simulation	–	Switch simulation of the status input on and off.	▪ Off ▪ On	Off
Input signal level	–	Select the signal level for the simulation of the status input.	▪ High ▪ Low	High

10.6.3 Output simulation

Navigation
"Diagnostics" menu → Simulation → Output simulation

▶ **Output simulation**	
Current output 1 to n simulation	→ 142
Current output 1 to n value	→ 142
Frequency output 1 to n simulation	→ 142
Frequency output 1 to n value	→ 142
Pulse output simulation 1 to n	→ 142
Pulse value 1 to n	→ 142
Switch output simulation 1 to n	→ 142
Switch state 1 to n	→ 142
Relay output 1 to n simulation	→ 142
Switch state 1 to n	→ 142

Pulse output simulation	→ 142
Pulse value	→ 142

Parameter overview with brief description

Parameter	Prerequisite	Description	Selection / User entry	Factory setting
Current output 1 to n simulation	–	Switch the simulation of the current output on and off.	▪ Off ▪ On	Off
Current output 1 to n value	In the **Current output 1 to n simulation** parameter, the **On** option is selected.	Enter the current value for simulation.	3.59 to 22.5 mA	3.59 mA
Frequency output 1 to n simulation	In the **Operating mode** parameter, the **Frequency** option is selected.	Switch the simulation of the frequency output on and off.	▪ Off ▪ On	Off
Frequency output 1 to n value	In the **Frequency simulation 1 to n** parameter, the **On** option is selected.	Enter the frequency value for the simulation.	0.0 to 12 500.0 Hz	0.0 Hz
Pulse output simulation 1 to n	In the **Operating mode** parameter, the **Pulse** option is selected.	Set and switch off the pulse output simulation. For **Fixed value** option: **Pulse width** parameter (→ 97) defines the pulse width of the pulses output.	▪ Off ▪ Fixed value ▪ Down-counting value	Off
Pulse value 1 to n	In the **Pulse output simulation 1 to n** parameter, the **Down-counting value** option is selected.	Enter the number of pulses for simulation.	0 to 65 535	0
Switch output simulation 1 to n	In the **Operating mode** parameter, the **Switch** option is selected.	Switch the simulation of the switch output on and off.	▪ Off ▪ On	Off
Switch state 1 to n	–	Select the status of the status output for the simulation.	▪ Open ▪ Closed	Open
Relay output 1 to n simulation	–	Switch simulation of the relay output on and off.	▪ Off ▪ On	Off
Switch state 1 to n	The **On** option is selected in the **Switch output simulation 1 to n** parameter parameter.	Select status of the relay output for the simulation.	▪ Open ▪ Closed	Open
Pulse output simulation	–	Set and switch off the pulse output simulation. For **Fixed value** option: **Pulse width** parameter defines the pulse width of the pulses output.	▪ Off ▪ Fixed value ▪ Down-counting value	Off
Pulse value	In the **Pulse output simulation** parameter, the **Down-counting value** option is selected.	Set and switch off the pulse output simulation.	0 to 65 535	0

10.6.4 Diagnostic event simulation

Navigation
"Diagnostics" menu → Simulation → Diagnostic event simulation

▶ Diagnostic event simulation	
Device alarm simulation	→ 143
Diagnostic event category	→ 143
Diagnostic event simulation	→ 143

Parameter overview with brief description

Parameter	Description	Selection / User entry	Factory setting
Device alarm simulation	Switch the device alarm on and off.	▪ Off ▪ On	Off
Diagnostic event simulation	Enter service ID of diagnostic event to simulate this event.	Positive integer	–
Diagnostic event category	Select a diagnostic event category.	▪ Sensor ▪ Electronics ▪ Configuration ▪ Process	Process
Diagnostic event simulation	Select a diagnostic event to simulate this event.	▪ Off ▪ Diagnostic event picklist (depends on the category selected)	Off

10.7 Protecting settings from unauthorized access

The following write protection options exist in order to protect the configuration of the measuring device from unintentional modification:
- Protect access to parameters via access code → 143
- Protect access to local operation via key locking → 60
- Protect access to measuring device via write protection switch → 145

10.7.1 Write protection via access code

The effects of the user-specific access code are as follows:
- Via local operation, the parameters for the measuring device configuration are write-protected and their values can no longer be changed.
- Device access is protected via the Web browser, as are the parameters for the measuring device configuration.
- Device access is protected via FieldCare or DeviceCare (via CDI-RJ45 service interface), as are the parameters for the measuring device configuration.

Defining the access code via the local display

1. Navigate to the **Define access code** parameter (→ 137).
2. Maximum of 16-digit character string comprising numbers, letters and special characters as the access code.

3. Enter the access code again in the **Confirm access code** parameter (→ 137) to confirm.
   ↳ The symbol appears in front of all write-protected parameters.

- Disabling parameter write protection via access code → 59.
- If the access code is lost: Resetting the access code → 144.
- The user role with which the user is currently logged in is displayed in **Access status** parameter.
  - Navigation path: Operation → Access status
  - User roles and their access rights → 59

- The device automatically locks the write-protected parameters again if a key is not pressed for 10 minutes in the navigation and editing view.
- The device locks the write-protected parameters automatically after 60 s if the user skips back to the operational display mode from the navigation and editing view.

Parameters which can always be modified via the local display

Certain parameters that do not affect the measurement are excepted from parameter write protection via the local display. Despite the user-specific access code, they can always be modified, even if the other parameters are locked.

Defining the access code via the web browser

1. Navigate to the **Define access code** parameter (→ 137).
2. Define a 16-digit (max.) numeric code as the access code.
3. Enter the access code again in the **Confirm access code** parameter (→ 137) to confirm.
   ↳ The web browser switches to the login page.

- Disabling parameter write protection via access code → 59.
- If the access code is lost: Resetting the access code → 144.
- The **Access status** parameter shows which user role the user is currently logged in with.
  - Navigation path: Operation → Access status
  - User roles and their access rights → 59

If no action is performed for 10 minutes, the web browser automatically returns to the login page.

Resetting the access code

If you misplace the user-specific access code, it is possible to reset the code to the factory setting. A reset code must be entered for this purpose. The user-specific access code can then be defined again afterwards.

Via Web browser, FieldCare, DeviceCare (via CDI-RJ45 service interface), fieldbus

You can only obtain a reset code from your local Endress+Hauser service organization. The code must be calculated explicitly for every device.

1. Note down the serial number of the device.
2. Read off the **Operating time** parameter.
3. Contact the local Endress+Hauser service organization and tell them the serial number and the operating time.
   ↳ Get the calculated reset code.

4. Enter the reset code in the **Reset access code** parameter (→ 137).
   ↳ The access code has been reset to the factory setting **0000**. It can be redefined → 143.

For IT security reasons, the calculated reset code is only valid for 96 hours from the specified operating time and for the specific serial number. If you cannot return to the device within 96 hours, you should either increase the operating time you read out by a few days or switch off the device.

10.7.2 Write protection via write protection switch

Unlike parameter write protection via a user-specific access code, this allows the user to lock write access to the entire operating menu - apart from the **"Contrast display" parameter**.

The parameter values are now read only and cannot be edited any more (exception **"Contrast display" parameter**):
Via local display

1.

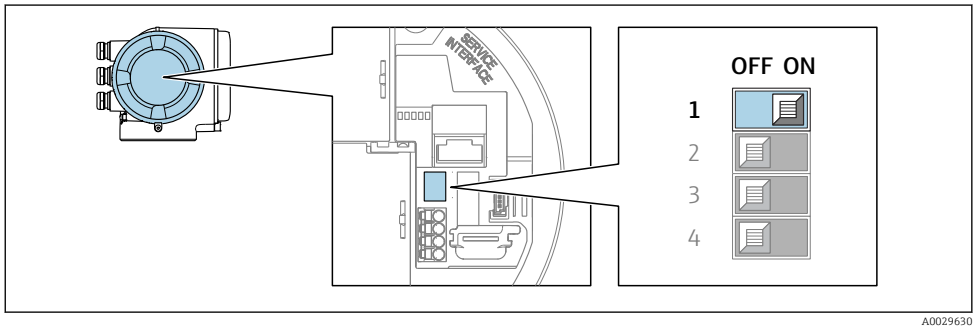

A0029630

Setting the write protection (WP) switch on the main electronics module to the **ON** position enables hardware write protection.
   ↳ In the **Locking status** parameter, the **Hardware locked** option is displayed → 146. In addition, on the local display the 🔒 symbol appears in front of the parameters in the header of the operational display and in the navigation view.

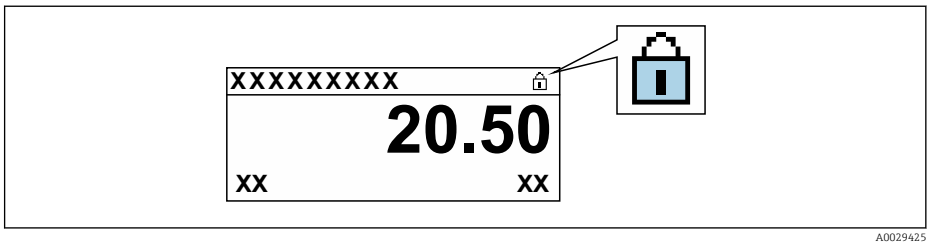

A0029425

2. Setting the write protection (WP) switch on the main electronics module to the **OFF** position (factory setting) disables hardware write protection.
   ↳ No option is displayed in the **Locking status** parameter → 146. On the local display, the 🔒 symbol disappears from in front of the parameters in the header of the operational display and in the navigation view.

11 Operation

11.1 Reading the device locking status

Device active write protection: **Locking status** parameter

Operation → Locking status

Function scope of the "Locking status" parameter

Options	Description
None	The access authorization displayed in the **Access status** parameter applies → 📄 59. Only appears on local display.
Hardware locked	The DIP switch for hardware locking is activated on the PCB board. This locks write access to the parameters (e.g. via local display or operating tool) → 📄 145.
CT active - all parameters	The DIP switch for custody transfer mode is activated on the PCB board. Locks the parameters that are relevant for custody transfer and also parameters that are predefined by Endress+Hauser and are not relevant for custody transfer (e.g. on local display or operating tool). For detailed information on custody transfer mode, see the Special Documentation for the device
CT active - defined parameters	The DIP switch for the custody transfer mode is activated on the PCB board. Only locks the parameters that are relevant for custody transfer (e.g. on the local display or operating tool). For detailed information on custody transfer mode, see the Special Documentation for the device
Temporarily locked	Write access to the parameters is temporarily locked on account of internal processes running in the device (e.g. data upload/download, reset, etc.). Once the internal processing has been completed, the parameters can be changed again.

11.2 Adjusting the operating language

Detailed information:
- To configure the operating language → 📄 74
- For information on the operating languages supported by the measuring device → 📄 221

11.3 Configuring the display

Detailed information:
- On the basic settings for the local display
- On the advanced settings for the local display → 📄 125

11.4 Reading the measured values

With the **Measured values** submenu, it is possible to read all the measured values.

Navigation
"Diagnostics" menu → Measured values

▶ **Measured values**

▶ **Measured variables** → 📄 147

▶ **Input values**	→ 157
▶ **Output values**	→ 158
▶ **Totalizers**	→ 161

11.4.1 "Measured variables" submenu

The **Measured variables** submenu contains all the parameters needed to display the current measured values for each process variable.

Navigation
"Diagnostics" menu → Measured values → Measured variables

▶ **Measured variables**

Mass flow	→ 149
Volume flow	→ 149
Corrected volume flow	→ 149
Density	→ 149
Reference density	→ 149
Temperature	→ 149
Pressure	→ 149
Concentration	→ 150
Target mass flow	→ 150
Carrier mass flow	→ 150
Target corrected volume flow	→ 150
Carrier corrected volume flow	→ 150
Target volume flow	→ 151
Carrier volume flow	→ 151
CTL	→ 151
CPL	→ 151
CTPL	→ 152

S&W volume flow	→ 152
S&W correction value	→ 152
Reference density alternative	→ 152
GSV flow	→ 152
GSV flow alternative	→ 153
NSV flow	→ 153
NSV flow alternative	→ 153
Oil CTL	→ 153
Oil CPL	→ 153
Oil CTPL	→ 154
Water CTL	→ 154
CTL alternative	→ 154
CPL alternative	→ 154
CTPL alternative	→ 154
Oil reference density	→ 155
Water reference density	→ 155
Oil density	→ 155
Water density	→ 155
Water cut	→ 155
Oil volume flow	→ 156
Oil corrected volume flow	→ 156
Oil mass flow	→ 156
Water volume flow	→ 156
Water corrected volume flow	→ 156
Water mass flow	→ 157

Weighted density average	→ 157
Weighted temperature average	→ 157

Parameter overview with brief description

Parameter	Prerequisite	Description	User interface	Factory setting
Mass flow	–	Displays the mass flow that is currently measured. *Dependency* The unit is taken from: **Mass flow unit** parameter (→ 80)	Signed floating-point number	–
Volume flow	–	Displays the volume flow that is currently calculated. *Dependency* The unit is taken from the **Volume flow unit** parameter (→ 80).	Signed floating-point number	–
Corrected volume flow	–	Displays the corrected volume flow that is currently calculated. *Dependency* The unit is taken from: **Corrected volume flow unit** parameter (→ 80)	Signed floating-point number	–
Density	–	Shows the density currently measured. *Dependency* The unit is taken from the **Density unit** parameter (→ 81).	Signed floating-point number	–
Reference density	–	Displays the reference density that is currently calculated. *Dependency* The unit is taken from: **Reference density unit** parameter (→ 80)	Signed floating-point number	–
Temperature	–	Shows the medium temperature currently measured. *Dependency* The unit is taken from: **Temperature unit** parameter (→ 81)	Signed floating-point number	–
Pressure	–	Displays either a fixed or external pressure value. *Dependency* The unit is taken from the **Pressure unit** parameter (→ 81).	Signed floating-point number	–

Parameter	Prerequisite	Description	User interface	Factory setting
Concentration	For the following order code: Order code for "Application package", option **ED** "Concentration" The software options currently enabled are displayed in the **Software option overview** parameter.	Displays the concentration that is currently calculated. *Dependency* The unit is taken from the **Concentration unit** parameter.	Signed floating-point number	–
Target mass flow	With the following conditions: Order code for "Application package", option **ED** "Concentration" The software options currently enabled are displayed in the **Software option overview** parameter.	Displays the mass flow that is currently measured for the target medium. *Dependency* The unit is taken from: **Mass flow unit** parameter (→ 🗎 80)	Signed floating-point number	–
Carrier mass flow	With the following conditions: Order code for "Application package", option **ED** "Concentration" The software options currently enabled are displayed in the **Software option overview** parameter.	Displays the mass flow of the carrier medium that is currently measured. *Dependency* The unit is taken from: **Mass flow unit** parameter (→ 🗎 80)	Signed floating-point number	–
Target corrected volume flow	With the following conditions: ▪ Order code for "Application package", option **ED** "Concentration" ▪ The **Ethanol in water** option or **%mass / %volume** option is selected in the **Liquid type** parameter. The software options currently enabled are displayed in the **Software option overview** parameter.	Displays the corrected volume flow that is currently measured for the target fluid. *Dependency* The unit is taken from the **Volume flow unit** parameter (→ 🗎 80).	Signed floating-point number	–
Carrier corrected volume flow	With the following conditions: ▪ Order code for "Application package", option **ED** "Concentration" ▪ In the **Liquid type** parameter, the **Ethanol in water** option or **%mass / %volume** option is selected. The software options currently enabled are displayed in the **Software option overview** parameter.	Displays the corrected volume flow currently measured for the carrier fluid. *Dependency* The unit is taken from the **Volume flow unit** parameter (→ 🗎 80).	Signed floating-point number	–

Parameter	Prerequisite	Description	User interface	Factory setting
Target volume flow	With the following conditions: ▪ Order code for "Application package", option **ED** "Concentration" ▪ The **Ethanol in water** option or **%mass / %volume** option is selected in the **Liquid type** parameter. ▪ The **%vol** option is selected in the **Concentration unit** parameter. The software options currently enabled are displayed in the **Software option overview** parameter.	Displays the volume flow currently measured for the target medium. *Dependency* The unit is taken from the **Volume flow unit** parameter (→ 🗎 80).	Signed floating-point number	–
Carrier volume flow	With the following conditions: ▪ Order code for "Application package", option **ED** "Concentration" ▪ The **Ethanol in water** option or **%mass / %volume** option is selected in the **Liquid type** parameter. ▪ The **%vol** option is selected in the **Concentration unit** parameter. The software options currently enabled are displayed in the **Software option overview** parameter.	Displays the volume flow currently measured for the carrier medium. *Dependency* The unit is taken from the **Volume flow unit** parameter (→ 🗎 80).	Signed floating-point number	–
CTL	For the following order code: ▪ "Application package", option EJ "Petroleum" ▪ The **API referenced correction** option is selected in **Petroleum mode** parameter. The software options currently enabled are displayed in the **Software option overview** parameter.	Displays the calibration factor which represents the effect of temperature on the fluid. This is used to convert the measured volume flow and the measured density to values at reference temperature.	Positive floating-point number	–
CPL	For the following order code: ▪ "Application package", option EJ "Petroleum" ▪ The **API referenced correction** option is selected in **Petroleum mode** parameter. The software options currently enabled are displayed in the **Software option overview** parameter.	Displays the calibration factor which represents the effect of pressure on the fluid. This is used to convert the measured volume flow and the measured density to values at reference pressure.	Positive floating-point number	–

Parameter	Prerequisite	Description	User interface	Factory setting
CTPL	For the following order code: ▪ "Application package", option EJ "Petroleum" ▪ The **API referenced correction** option is selected in **Petroleum mode** parameter. The software options currently enabled are displayed in the **Software option overview** parameter.	Displays the combined calibration factor which represents the effect of temperature and pressure on the fluid This is used to convert the measured volume flow and the measured density to values at reference temperature and reference pressure.	Positive floating-point number	–
S&W volume flow	For the following order code: ▪ "Application package", option EJ "Petroleum" ▪ The **API referenced correction** option is selected in **Petroleum mode** parameter. The software options currently enabled are displayed in the **Software option overview** parameter.	Displays the S&W volume flow which is calculated from the measured total volume flow minus the net volume flow. *Dependency* The unit is taken from: **Volume flow unit** parameter	Signed floating-point number	–
S&W correction value	For the following order code: ▪ "Application package", option EJ "Petroleum" ▪ The **External value** option or **Current input 1…n** option is selected in the **S&W input mode** parameter. The software options currently enabled are displayed in the **Software option overview** parameter.	Shows the correction value for sediment and water.	Positive floating-point number	–
Reference density alternative	For the following order code: ▪ "Application package", option **EJ** "Petroleum" ▪ In the **Petroleum mode** parameter, the **API referenced correction** option is selected. The software options currently enabled are displayed in the **Software option overview** parameter.	Displays the fluid density at the alternative reference temperature. *Dependency* The unit is taken from: **Reference density unit** parameter	Signed floating-point number	–
GSV flow	For the following order code: ▪ "Application package", option EJ "Petroleum" ▪ The **API referenced correction** option is selected in **Petroleum mode** parameter. The software options currently enabled are displayed in the **Software option overview** parameter.	Displays the measured total volume flow, corrected to the reference temperature and the reference pressure. *Dependency* The unit is taken from: **Corrected volume flow unit** parameter	Signed floating-point number	–

Parameter	Prerequisite	Description	User interface	Factory setting
GSV flow alternative	For the following order code: ▪ "Application package", option **EJ** "Petroleum" ▪ In the **Petroleum mode** parameter, the **API referenced correction** option is selected. The software options currently enabled are displayed in the **Software option overview** parameter.	Displays the measured total volume flow, corrected to the alternative reference temperature and the alternative reference pressure. *Dependency* The unit is taken from: **Corrected volume flow unit** parameter	Signed floating-point number	–
NSV flow	For the following order code: ▪ "Application package", option EJ "Petroleum" ▪ The **API referenced correction** option is selected in **Petroleum mode** parameter. The software options currently enabled are displayed in the **Software option overview** parameter.	Displays the net volume flow which is calculated from the measured total volume flow minus the value for sediment & water and minus the shrinkage. *Dependency* The unit is taken from: **Corrected volume flow unit** parameter	Signed floating-point number	–
NSV flow alternative	For the following order code: ▪ "Application package", option **EJ** "Petroleum" ▪ In the **Petroleum mode** parameter, the **API referenced correction** option is selected. The software options currently enabled are displayed in the **Software option overview** parameter.	Displays the net volume flow which is calculated from the measured alternative total volume minus the value for sediment & water and minus the shrinkage. *Dependency* The unit is taken from: **Corrected volume flow unit** parameter	Signed floating-point number	–
Oil CTL	For the following order code: ▪ "Application package", option **EJ** "Petroleum" ▪ In the **Petroleum mode** parameter, the **Net oil & water cut** option is selected. The software options currently enabled are displayed in the **Software option overview** parameter.	Displays the correction factor which represents the effect of temperature on the oil. This is used to convert the measured oil volume flow and the measured oil density to values at reference temperature.	Positive floating-point number	–
Oil CPL	For the following order code: ▪ "Application package", option **EJ** "Petroleum" ▪ In the **Petroleum mode** parameter, the **Net oil & water cut** option is selected. The software options currently enabled are displayed in the **Software option overview** parameter.	Displays the correction factor which represents the effect of pressure on the oil. This is used to convert the measured oil volume flow and the measured oil density to values at reference pressure.	Positive floating-point number	–

Parameter	Prerequisite	Description	User interface	Factory setting
Oil CTPL	For the following order code: ▪ "Application package", option **EJ** "Petroleum" ▪ In the **Petroleum mode** parameter, the **Net oil & water cut** option is selected. The software options currently enabled are displayed in the **Software option overview** parameter.	Displays the combined correction factor which represents the effect of temperature and pressure on the oil. This is used to convert the measured oil volume flow and the measured oil density to values at reference temperature and reference pressure.	Positive floating-point number	–
Water CTL	For the following order code: ▪ "Application package", option **EJ** "Petroleum" ▪ In the **Petroleum mode** parameter, the **Net oil & water cut** option is selected. The software options currently enabled are displayed in the **Software option overview** parameter.	Displays the correction factor which represents the effect of temperature on the water. This is used to convert the measured water volume flow and the measured water density to values at reference temperature.	Positive floating-point number	–
CTL alternative	For the following order code: ▪ "Application package", option **EJ** "Petroleum" ▪ In the **Petroleum mode** parameter, the **API referenced correction** option is selected. The software options currently enabled are displayed in the **Software option overview** parameter.	Displays the correction factor which represents the effect of temperature on the fluid. This is used to convert the measured volume flow and the measured density to values at the alternative reference temperature.	Positive floating-point number	–
CPL alternative	For the following order code: ▪ "Application package", option **EJ** "Petroleum" ▪ In the **Petroleum mode** parameter, the **API referenced correction** option is selected. The software options currently enabled are displayed in the **Software option overview** parameter.	Displays the correction factor which represents the effect of pressure on the fluid. This is used to convert the measured volume flow and the measured density to values at the alternative reference pressure.	Positive floating-point number	–
CTPL alternative	For the following order code: ▪ "Application package", option **EJ** "Petroleum" ▪ In the **Petroleum mode** parameter, the **API referenced correction** option is selected. The software options currently enabled are displayed in the **Software option overview** parameter.	Displays the combined correction factor which represents the effect of temperature and pressure on the fluid. This is used to convert the measured volume flow and the measured density to values at the alternative reference temperature and the alternative reference pressure.	Positive floating-point number	1

Parameter	Prerequisite	Description	User interface	Factory setting
Oil reference density	For the following order code: ▪ "Application package", option **EJ** "Petroleum" ▪ In the **Petroleum mode** parameter, the **Net oil & water cut** option is selected. The software options currently enabled are displayed in the **Software option overview** parameter.	Shows the oil density at the reference temperature.	Signed floating-point number	–
Water reference density	For the following order code: ▪ "Application package", option **EJ** "Petroleum" ▪ In the **Petroleum mode** parameter, the **Net oil & water cut** option is selected. The software options currently enabled are displayed in the **Software option overview** parameter.	Shows the water density at the reference temperature.	Signed floating-point number	–
Oil density	For the following order code: ▪ "Application package", option **EJ** "Petroleum" ▪ In the **Petroleum mode** parameter, the **Net oil & water cut** option is selected. The software options currently enabled are displayed in the **Software option overview** parameter.	Displays the density of the oil currently measured.	Signed floating-point number	–
Water density	For the following order code: ▪ "Application package", option **EJ** "Petroleum" ▪ In the **Petroleum mode** parameter, the **Net oil & water cut** option is selected. The software options currently enabled are displayed in the **Software option overview** parameter.	Displays the density of the water currently measured.	Signed floating-point number	–
Water cut	For the following order code: ▪ "Application package", option **EJ** "Petroleum" ▪ In the **Petroleum mode** parameter, the **API referenced correction** option is selected. The software options currently enabled are displayed in the **Software option overview** parameter.	Displays the percentage water volume flow in relation to the total volume flow of the fluid.	0 to 100 %	–

Parameter	Prerequisite	Description	User interface	Factory setting
Oil volume flow	For the following order code: ▪ "Application package", option **EJ** "Petroleum" ▪ In the **Petroleum mode** parameter, the **Net oil & water cut** option is selected. The software options currently enabled are displayed in the **Software option overview** parameter.	Displays the currently calculated volume flow of the oil. Dependency: ▪ Based on the value displayed in the **Water cut** parameter ▪ The unit is taken from: **Volume flow unit** parameter	Signed floating-point number	–
Oil corrected volume flow	For the following order code: ▪ "Application package", option **EJ** "Petroleum" ▪ In the **Petroleum mode** parameter, the **Net oil & water cut** option is selected. The software options currently enabled are displayed in the **Software option overview** parameter.	Displays the currently calculated volume flow of the oil, calculated to values at reference temperature and reference pressure. Dependency: ▪ Based on the value displayed in the **Water cut** parameter ▪ The unit is taken from: **Corrected volume flow unit** parameter	Signed floating-point number	–
Oil mass flow	For the following order code: ▪ "Application package", option **EJ** "Petroleum" ▪ In the **Petroleum mode** parameter, the **Net oil & water cut** option is selected. The software options currently enabled are displayed in the **Software option overview** parameter.	Displays the currently calculated mass flow of the oil. Dependency: ▪ Based on the value displayed in the **Water cut** parameter ▪ The unit is taken from: **Mass flow unit** parameter	Signed floating-point number	–
Water volume flow	For the following order code: ▪ "Application package", option **EJ** "Petroleum" ▪ In the **Petroleum mode** parameter, the **Net oil & water cut** option is selected. The software options currently enabled are displayed in the **Software option overview** parameter.	Displays the currently calculated volume flow of the water. Dependency: ▪ Based on the value displayed in the **Water cut** parameter ▪ The unit is taken from: **Volume flow unit** parameter	Signed floating-point number	–
Water corrected volume flow	For the following order code: ▪ "Application package", option **EJ** "Petroleum" ▪ In the **Petroleum mode** parameter, the **Net oil & water cut** option is selected. The software options currently enabled are displayed in the **Software option overview** parameter.	Displays the currently calculated volume flow of the water, calculated to values at reference temperature and reference pressure. Dependency: ▪ Based on the value displayed in the **Water cut** parameter ▪ The unit is taken from: **Corrected volume flow unit** parameter	Signed floating-point number	–

Parameter	Prerequisite	Description	User interface	Factory setting
Water mass flow	For the following order code: ▪ "Application package", option **EJ** "Petroleum" ▪ In the **Petroleum mode** parameter, the **Net oil & water cut** option is selected. The software options currently enabled are displayed in the **Software option overview** parameter.	Displays the currently calculated mass flow of the water. Dependency: ▪ Based on the value displayed in the **Water cut** parameter ▪ The unit is taken from: **Mass flow unit** parameter	Signed floating-point number	–
Weighted density average	For the following order code: ▪ "Application package", option **EJ** "Petroleum" ▪ "Application package", option **EM** "Petroleum + Locking function" The software options currently enabled are displayed in the **Software option overview** parameter.	Displays the weighted average for the density since the last time the density averages were reset. Dependency: ▪ The unit is taken from: **Density unit** parameter ▪ The value is reset to NaN (Not a Number) via the **Reset weighted averages** parameter	Signed floating-point number	–
Weighted temperature average	For the following order code: ▪ "Application package", option **EJ** "Petroleum" ▪ "Application package", option **EM** "Petroleum + Locking function" The software options currently enabled are displayed in the **Software option overview** parameter.	Displays the weighted average for the temperature since the last time the temperature averages were reset. Dependency: ▪ The unit is taken from: **Temperature unit** parameter ▪ The value is reset to NaN (Not a Number) via the **Reset weighted averages** parameter	Signed floating-point number	–

11.4.2 "Input values" submenu

The **Input values** submenu guides you systematically to the individual input values.

Navigation

"Diagnostics" menu → Measured values → Input values

▶ **Input values**

▶ **Current input 1 to n** → 📄 157

▶ **Status input 1 to n** → 📄 158

Input values of current input

The **Current input 1 to n** submenu contains all the parameters needed to display the current measured values for every current input.

Navigation
"Diagnostics" menu → Measured values → Input values → Current input 1 to n

▶ **Current input 1 to n**		
	Measured values 1 to n	→ 📄 158
	Measured current 1 to n	→ 📄 158

Parameter overview with brief description

Parameter	Description	User interface
Measured values 1 to n	Displays the current input value.	Signed floating-point number
Measured current 1 to n	Displays the current value of the current input.	0 to 22.5 mA

Input values of status input

The **Status input 1 to n** submenu contains all the parameters needed to display the current measured values for every status input.

Navigation
"Diagnostics" menu → Measured values → Input values → Status input 1 to n

▶ **Status input 1 to n**		
	Value status input	→ 📄 158

Parameter overview with brief description

Parameter	Description	User interface
Value status input	Shows the current input signal level.	▪ High ▪ Low

11.4.3 Output values

The **Output values** submenu contains all the parameters needed to display the current measured values for every output.

Navigation
"Diagnostics" menu → Measured values → Output values

▶ **Output values**		
	▶ **Current output 1 to n**	→ 📄 159
	▶ **Pulse/frequency/switch output 1 to n**	→ 📄 159

▶ **Relay output 1 to n**	→ 📄 160
▶ **Double pulse output**	→ 📄 160

Output values of current output

The **Value current output** submenu contains all the parameters needed to display the current measured values for every current output.

Navigation
"Diagnostics" menu → Measured values → Output values → Value current output 1 to n

▶ **Current output 1 to n**	
Output current	→ 📄 159
Measured current	→ 📄 159

Parameter overview with brief description

Parameter	Description	User interface
Output current	Displays the current value currently calculated for the current output.	3.59 to 22.5 mA
Measured current	Displays the current value currently measured for the current output.	0 to 30 mA

Output values for pulse/frequency/switch output

The **Pulse/frequency/switch output 1 to n** submenu contains all the parameters needed to display the current measured values for every pulse/frequency/switch output.

Navigation
"Diagnostics" menu → Measured values → Output values → Pulse/frequency/switch output 1 to n

▶ **Pulse/frequency/switch output 1 to n**	
Output frequency	→ 📄 160
Pulse output	→ 📄 160
Switch state	→ 📄 160

Parameter overview with brief description

Parameter	Prerequisite	Description	User interface
Output frequency	In the **Operating mode** parameter, the **Frequency** option is selected.	Displays the value currently measured for the frequency output.	0.0 to 12 500.0 Hz
Pulse output	The **Pulse** option is selected in the **Operating mode** parameter parameter.	Displays the pulse frequency currently output.	Positive floating-point number
Switch state	The **Switch** option is selected in the **Operating mode** parameter.	Displays the current switch output status.	▪ Open ▪ Closed

Output values for relay output

The **Relay output 1 to n** submenu contains all the parameters needed to display the current measured values for every relay output.

Navigation

"Diagnostics" menu → Measured values → Output values → Relay output 1 to n

▶ **Relay output 1 to n**	
Switch state	→ 📄 160
Switch cycles	→ 📄 160
Max. switch cycles number	→ 📄 160

Parameter overview with brief description

Parameter	Description	User interface
Switch state	Indicates the current switch state of the output.	▪ Open ▪ Closed
Switch cycles	Shows number of all performed switch cycles.	Positive integer
Max. switch cycles number	Shows the maximal number of guaranteed switch cycles.	Positive integer

Output values for double pulse output

The **Double pulse output** submenu contains all the parameters needed to display the current measured values for every double pulse output.

Navigation

"Diagnostics" menu → Measured values → Output values → Double pulse output

▶ **Double pulse output**	
Pulse output	→ 📄 161

Parameter overview with brief description

Parameter	Description	User interface
Pulse output	Shows the currently output pulse frequency.	Positive floating-point number

11.4.4 Totalizer

The **Totalizer** submenu contains all the parameters needed to display the current measured values for every totalizer.

Navigation
"Diagnostics" menu → Measured values → Totalizer

▶ Totalizers	
Totalizer 1 to n value	→ 📄 161
Totalizer 1 to n overflow	→ 📄 161

Parameter overview with brief description

Parameter	Description	User interface	Factory setting
Totalizer value	Displays the current totalizer counter value.	Signed floating-point number	0 kg
Totalizer overflow	Displays the current totalizer overflow.	−32 000.0 to 32 000.0	0

11.5 Adapting the measuring device to the process conditions

The following are available for this purpose:
- Basic settings using the**Setup** menu (→ 📄 74)
- Advanced settings using the**Advanced setup** submenu (→ 📄 111)

11.6 Performing a totalizer reset

The totalizers are reset in the **Operation** submenu:
- Control Totalizer
- Reset all totalizers

Navigation
"Operation" menu → Totalizer handling

▶ Totalizer handling	
Totalizer 1 to n control	→ 📄 162
Preset value 1 to n	→ 📄 162
Reset all totalizers	→ 📄 162

Parameter overview with brief description

Parameter	Prerequisite	Description	Selection / User entry	Factory setting
Totalizer 1 to n control	A process variable is selected in the **Assign process variable** parameter (→ 🗎 120) of the **Totalizer 1 to n** submenu.	Operate the totalizer.	▪ Totalize ▪ Reset + hold * ▪ Preset + hold * ▪ Reset + totalize ▪ Preset + totalize * ▪ Hold *	Totalize
Preset value 1 to n	A process variable is selected in the **Assign process variable** parameter (→ 🗎 120) of the **Totalizer 1 to n** submenu.	Specify start value for totalizer. *Dependency* ℹ	Signed floating-point number	Depends on country: ▪ 0 kg ▪ 0 lb
Reset all totalizers	–	Reset all totalizers to 0 and start.	▪ Cancel ▪ Reset + totalize	Cancel

* Visibility depends on order options or device settings

11.6.1 Function scope of "Control Totalizer" parameter

Options	Description
Totalize	The totalizer is started or continues running.
Reset + hold	The totaling process is stopped and the totalizer is reset to 0.
Preset + hold [1)]	The totaling process is stopped and the totalizer is set to its defined start value from the **Preset value** parameter.
Reset + totalize	The totalizer is reset to 0 and the totaling process is restarted.
Preset + totalize [1)]	The totalizer is set to the defined start value in the **Preset value** parameter and the totaling process is restarted.
Hold	Totalizing is stopped.

1) Visible depending on the order options or device settings

11.6.2 Function range of "Reset all totalizers" parameter

Options	Description
Cancel	No action is executed and the user exits the parameter.
Reset + totalize	Resets all totalizers to 0 and restarts the totaling process. This deletes all the previously aggregated flow values.

11.7 Displaying the measured value history

The **Extended HistoROM** application package must be enabled in the device (order option) for the **Data logging** submenu to appear. This contains all the parameters for the measured value history.

ℹ Data logging is also available via:
- Plant Asset Management Tool FieldCare → 🗎 71.
- Web browser

Function scope
- A total of 1000 measured values can be stored
- 4 logging channels
- Adjustable logging interval for data logging
- Displays the measured value trend for each logging channel in the form of a chart

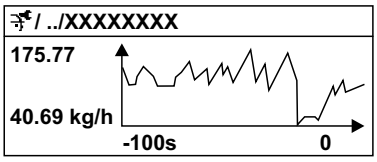

A0016357

28 *Chart of a measured value trend*

- x-axis: depending on the number of channels selected displays 250 to 1000 measured values of a process variable.
- y-axis: displays the approximate measured value span and constantly adapts this to the ongoing measurement.

If the length of the logging interval or the assignment of the process variables to the channels is changed, the content of the data logging is deleted.

Navigation
"Diagnostics" menu → Data logging

▶ Data logging	
Assign channel 1	→ 164
Assign channel 2	→ 165
Assign channel 3	→ 165
Assign channel 4	→ 165
Logging interval	→ 165
Clear logging data	→ 165
Data logging	→ 165
Logging delay	→ 165
Data logging control	→ 165
Data logging status	→ 166
Entire logging duration	→ 166

Parameter overview with brief description

Parameter	Prerequisite	Description	Selection / User entry / User interface	Factory setting
Assign channel 1	The **Extended HistoROM** application package is available.	Assign process variable to logging channel.	▪ Off ▪ Mass flow ▪ Volume flow ▪ Corrected volume flow * ▪ Density ▪ Reference density * ▪ Temperature ▪ Pressure ▪ GSV flow * ▪ GSV flow alternative * ▪ NSV flow * ▪ NSV flow alternative * ▪ S&W volume flow * ▪ Reference density alternative * ▪ Water cut * ▪ Oil density * ▪ Water density * ▪ Oil mass flow * ▪ Water mass flow * ▪ Oil volume flow * ▪ Water volume flow * ▪ Oil corrected volume flow * ▪ Water corrected volume flow * ▪ Concentration * ▪ Target mass flow * ▪ Carrier mass flow * ▪ Target volume flow * ▪ Carrier volume flow * ▪ Target corrected volume flow * ▪ Carrier corrected volume flow * ▪ Application specific output 0 * ▪ Application specific output 1 * ▪ Inhomogeneous medium index ▪ Suspended bubbles index * ▪ HBSI * ▪ Raw value mass flow ▪ Exciter current 0 ▪ Oscillation damping 0 ▪ Oscillation damping fluctuation 0 * ▪ Oscillation frequency 0 ▪ Frequency fluctuation 0 * ▪ Oscillation amplitude *	Off

Parameter	Prerequisite	Description	Selection / User entry / User interface	Factory setting
			▪ Oscillation amplitude 1 * ▪ Signal asymmetry ▪ Torsion signal asymmetry * ▪ Carrier pipe temperature * ▪ Electronics temperature ▪ Sensor index coil asymmetry ▪ Test point 0 ▪ Test point 1 ▪ Current output 1 ▪ Current output 2 * ▪ Current output 3 *	
Assign channel 2	The **Extended HistoROM** application package is available. The software options currently enabled are displayed in the **Software option overview** parameter.	Assign a process variable to logging channel.	For the picklist, see **Assign channel 1** parameter (→ 164)	Off
Assign channel 3	The **Extended HistoROM** application package is available. The software options currently enabled are displayed in the **Software option overview** parameter.	Assign a process variable to logging channel.	For the picklist, see **Assign channel 1** parameter (→ 164)	Off
Assign channel 4	The **Extended HistoROM** application package is available. The software options currently enabled are displayed in the **Software option overview** parameter.	Assign a process variable to logging channel.	For the picklist, see **Assign channel 1** parameter (→ 164)	Off
Logging interval	The **Extended HistoROM** application package is available.	Define the logging interval for data logging. This value defines the time interval between the individual data points in the memory.	0.1 to 3 600.0 s	1.0 s
Clear logging data	The **Extended HistoROM** application package is available.	Clear the entire logging data.	▪ Cancel ▪ Clear data	Cancel
Data logging	–	Select the type of data logging.	▪ Overwriting ▪ Not overwriting	Overwriting
Logging delay	In the **Data logging** parameter, the **Not overwriting** option is selected.	Enter the time delay for measured value logging.	0 to 999 h	0 h
Data logging control	In the **Data logging** parameter, the **Not overwriting** option is selected.	Start and stop measured value logging.	▪ None ▪ Delete + start ▪ Stop	None

Parameter	Prerequisite	Description	Selection / User entry / User interface	Factory setting
Data logging status	In the **Data logging** parameter, the **Not overwriting** option is selected.	Displays the measured value logging status.	▪ Done ▪ Delay active ▪ Active ▪ Stopped	Done
Entire logging duration	In the **Data logging** parameter, the **Not overwriting** option is selected.	Displays the total logging duration.	Positive floating-point number	0 s

* Visibility depends on order options or device settings

11.8 Gas Fraction Handler

The Gas Fraction Handler improves measurement stability and repeatability in the event of two-phase media and provides valuable diagnostic information for the process.

The function continuously checks for the presence of gas bubbles in liquids or droplets in gases, as this second phase influences the output values for flow and density.

In the case of two-phase media, the Gas Fraction Handler stabilizes the output values and enables better readability for operators and easier interpretation by the process control system. The level of smoothing is adjusted according to the severity of the disturbances introduced by the second phase. In the case of single-phase media, the Gas Fraction Handler does not have any influence on the output values.

Possible options in the Gas Fraction Handler parameter:
- Off: Disables the Gas Fraction Handler. When a second phase is present, large fluctuations in the values output for flow and density will occur.
- Moderate: Use for applications with low levels or intermittent levels of second phase.
- Powerful: Use for applications with very significant levels of second phase.

The Gas Fraction Handler is cumulative to any fixed damping constants applied to flow and density that are set elsewhere in the instrument parameterization.

For detailed information on the parameter descriptions of the Gas Fraction Handler, see the Special Documentation for the device → 📖 233

11.8.1 "Measurement mode" submenu

Navigation
"Expert" menu → Sensor → Measurement mode

▶ **Measurement mode**

MFT (Multi-Frequency Technology)	→ 📖 167
Select medium type	→ 📖 167
Select gas type	→ 📖 167
Reference sound velocity	→ 📖 167
Reference sound velocity	→ 📖 167
Temperature coefficient sound velocity	→ 📖 168

Temperature coefficient sound velocity	→ 168
Gas Fraction Handler	→ 168

Parameter overview with brief description

Parameter	Prerequisite	Description	Selection / User entry	Factory setting
MFT (Multi-Frequency Technology)	–	Enable/disable multi-frequency technology to increase the measuring accuracy in the event of microbubbles in the medium.	▪ No ▪ Yes	Yes
Select medium type	–	Use this function to select the type of medium: "Gas" or "Liquid". Select the "Other" option in exceptional cases in order to enter the properties of the medium manually (e.g. for highly compressive liquids such as sulfuric acid).	▪ Liquid ▪ Gas ▪ Other	Liquid
Select gas type	In the **Medium selection** submenu, the **Gas** option is selected.	Select measured gas type.	▪ Air ▪ Ammonia NH3 ▪ Argon Ar ▪ Sulfur hexafluoride SF6 ▪ Oxygen O2 ▪ Ozone O3 ▪ Nitrogen oxide NOx ▪ Nitrogen N2 ▪ Nitrous oxide N2O ▪ Methane CH4 ▪ Methane CH4 + 10% Hydrogen H2 ▪ Methane CH4 + 20% Hydrogen H2 ▪ Methane CH4 + 30% Hydrogen H2 ▪ Hydrogen H2 ▪ Helium He ▪ Hydrogen chloride HCl ▪ Hydrogen sulfide H2S ▪ Ethylene C2H4 ▪ Carbon dioxide CO2 ▪ Carbon monoxide CO ▪ Chlorine Cl2 ▪ Butane C4H10 ▪ Propane C3H8 ▪ Propylene C3H6 ▪ Ethane C2H6 ▪ Other	Methane CH4
Reference sound velocity	In the **Select gas type** parameter, the **Other** option is selected.	Enter sound velocity of the gas at 0 °C (32 °F).	1 to 99 999.9999 m/s	415.0 m/s
Reference sound velocity	In the **Select medium type** parameter, the **Other** option is selected.	Enter sound velocity of the medium at 0 °C (32 °F).	Signed floating-point number	1 456 m/s

Parameter	Prerequisite	Description	Selection / User entry	Factory setting
Temperature coefficient sound velocity	In the **Select gas type** parameter, the **Other** option is selected.	Enter the temperature coefficient for the gas sound velocity.	Positive floating point number	0.87 (m/s)/K
Temperature coefficient sound velocity	In the **Select medium type** parameter, the **Other** option is selected.	Enter temperature coefficient for the medium sound velocity.	Signed floating-point number	1.3 (m/s)/K
Gas Fraction Handler	–	Activates the Gas Fraction Handler function for two phase media.	▪ Off ▪ Moderate ▪ Powerful	Moderate

11.8.2 "Medium index" submenu

Navigation

"Expert" menu → Application → Medium index

▶ **Medium index**

Inhomogeneous medium index	→ 📄 168
Cutoff inhomogeneous wet gas	→ 📄 168
Cutoff inhomogeneous liquid	→ 📄 168
Suspended bubbles index	→ 📄 168
Cutoff suspended bubbles	→ 📄 168

Parameter overview with brief description

Parameter	Prerequisite	Description	User interface / User entry	Factory setting
Inhomogeneous medium index	–	Shows the degree of inhomogeneity of the medium.	Signed floating-point number	–
Cutoff inhomogeneous wet gas	–	Enter cutoff value for wet gas applications. Below this value the "Inhomogeneous medium index" is set to 0.	Positive floating-point number	0.25
Cutoff inhomogeneous liquid	–	Enter cutoff value for liquid applications. Below this value the "Inhomogeneous medium index" is set to 0.	Positive floating-point number	0.05
Suspended bubbles index	The diagnostic index is only available for Promass Q.	Shows the relative amount of suspended bubbles in the medium.	Signed floating-point number	–
Cutoff suspended bubbles	The parameter is only available for Promass Q.	Enter the cut off value for suspended bubbles. Below this value the 'Index for suspended bubbles' is set to 0.	Positive floating-point number	0.05

12 Diagnostics and troubleshooting

12.1 General troubleshooting

For local display

Fault	Possible causes	Remedial action
Local display is dark, but signal output is within the valid range	The cable of the display module is not plugged in correctly.	Insert the plug correctly into the main electronics module and display module.
Local display dark and no output signals	Supply voltage does not match the voltage specified on the nameplate.	Apply the correct supply voltage .
Local display dark and no output signals	Supply voltage has incorrect polarity.	Reverse polarity of supply voltage.
Local display dark and no output signals	No contact between connecting cables and terminals.	Check the electrical contact between the cable and terminals and correct if necessary.
Local display dark and no output signals	▪ Terminals are not plugged into the I/O electronics module correctly. ▪ Terminals are not plugged into the main electronics module correctly.	Check terminals.
Local display dark and no output signals	▪ I/O electronics module is defective. ▪ Main electronics module is defective.	Order spare part → 🗎 191.
Local display cannot be read, but signal output is within the valid range	Display is set too bright or too dark.	▪ Set the display brighter by simultaneously pressing ⊞ + Ⓔ. ▪ Set the display darker by simultaneously pressing ⊟ + Ⓔ.
Local display is dark, but signal output is within the valid range	Display module is defective.	Order spare part → 🗎 191.
Backlighting of local display is red	Diagnostic event with "Alarm" diagnostic behavior has occurred.	Take remedial actions → 🗎 177
Text on local display appears in a language that cannot be understood.	The selected operating language cannot be understood.	1. Press ⊟ + ⊞ for 2 s ("home position"). 2. Press Ⓔ. 3. Configure the required language in the **Display language** parameter (→ 🗎 107).
Message on local display: "Communication Error" "Check Electronics"	Communication between the display module and the electronics is interrupted.	▪ Check the cable and the connector between the main electronics module and display module. ▪ Order spare part → 🗎 191.

For output signals

Fault	Possible causes	Remedial action
Signal output outside the valid range	Main electronics module is defective.	Order spare part → 🗎 191.
Device shows correct value on local display, but signal output is incorrect, though in the valid range.	Parameter configuration error	Check and adjust parameter configuration.
Device is measuring incorrectly.	Configuration error or device is operated outside the application.	1. Check and correct parameter configuration. 2. Observe limit values specified in the "Technical Data".

For access

Fault	Possible causes	Remedial action
Write access to parameters is not possible.	Hardware write protection is enabled.	Set the write protection switch on the main electronics module to the **OFF** position → 🗎 145.
Write access to parameters is not possible.	Current user role has limited access authorization.	1. Check user role → 🗎 59. 2. Enter correct customer-specific access code → 🗎 59.
Connection to the web server is not possible.	Web server is disabled.	Use the "FieldCare" or "DeviceCare" operating tool to check if the web server of the device is enabled and enable if necessary → 🗎 66.
	The Ethernet interface on the PC is incorrectly configured.	▶ Check the properties of the Internet protocol (TCP/IP)→ 🗎 62. ▶ Check the network settings with the IT manager.
Connection to the web server is not possible.	WLAN access data are incorrect.	▪ Check WLAN network status. ▪ Log on to the device again using WLAN access data. ▪ Check that WLAN is enabled on the measuring instrument and operating unit → 🗎 62.
	WLAN communication is disabled.	–
Unable to connect to web server, FieldCare or DeviceCare.	WLAN network is not available.	▪ Check if WLAN reception is present: LED on display module is lit blue. ▪ Check if WLAN connection is enabled: LED on display module flashes blue. ▪ Switch on instrument function.
Network connection not present or unstable.	WLAN network is weak.	▪ Operating unit outside reception range: Check network status on operating unit. ▪ To improve network performance, use an external WLAN antenna.
	Parallel WLAN and Ethernet communication.	▪ Check network settings. ▪ Temporarily enable only the WLAN as an interface.
Web browser frozen and operation no longer possible.	Data transfer is active.	Wait until data transfer or current action is finished.
	Connection lost	▶ Check cable connection and voltage supply. ▶ Refresh the web browser and restart if necessary.
Display of web browser content is difficult to read or incomplete.	Web browser version used is not optimal.	▶ Use correct web browser version → 🗎 61. ▶ Empty the web browser cache. ▶ Restart the web browser.
	Unsuitable view settings.	Change the font size/display ratio of the web browser.
Incomplete or no display of content in the web browser.	▪ JavaScript is not enabled. ▪ JavaScript cannot be enabled.	▶ Enable JavaScript. ▶ Enter http://XXX.XXX.X.X.XX/servlet/basic.html as the IP address.
Operation with FieldCare or DeviceCare via service interface CDI-RJ45 (port 8000) is not possible.	Firewall of the PC or network is blocking communication.	Depending on the settings of the firewall used on the PC or in the network, the firewall must be adapted or disabled to allow FieldCare/DeviceCare access.
Flashing the firmware with FieldCare or DeviceCare via service interface CDI-RJ45 (port 8000 or TFTP ports) is not possible.	Firewall of the PC or network is blocking communication.	Depending on the settings of the firewall used on the PC or in the network, the firewall must be adapted or disabled to allow FieldCare/DeviceCare access.

12.2 Diagnostic information via LEDs

12.2.1 Transmitter

Various LEDs in the transmitter provide information on the device status.

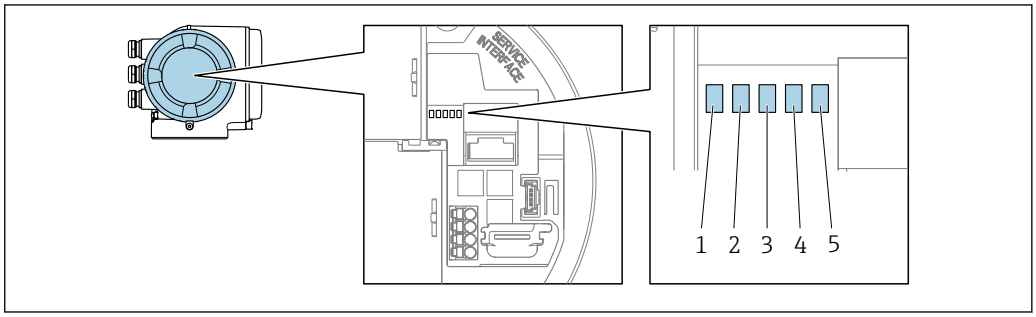

A0029629

1 *Supply voltage*
2 *Device status*
3 *Network status*
4 *Port 1: communication*
5 *Port 2 active: service interface (CDI)*

LED		Color	Meaning
1	Supply voltage	Off	Supply voltage is off or too low.
		Green	Supply voltage is OK.
2	Device status (normal operation)	Off	Firmware error
		Green	Device status is OK.
		Flashing green	Device is not configured.
		Red	A diagnostic event with "Alarm" diagnostic behavior has occurred.
		Flashing red	A diagnostic event with "Warning" diagnostic behavior has occurred.
		Flashing red/green	The device restarts.
2	Device status (during start-up)	Flashes red slowly	If > 30 seconds: problem with the boot loader.
		Flashes red quickly	If > 30 seconds: compatibility problem when reading the firmware.
3	Network status	Off	▪ Device does not receive any Modbus TCP data. ▪ No Modbus TCP client connected.
		Green	At least one Modbus TCP client is connected (Modbus TCP only).
		Flashing red	500 ms off, 500 ms on
4	Communication	Off	Communication not active.
		White	Communication active.
5	Service interface (CDI)	Off	Not connected or no connection established.
		Yellow	Connected and connection established.
		Flashing yellow	Service interface active.

12.3 Diagnostic information on local display

12.3.1 Diagnostic message

Faults detected by the self-monitoring system of the measuring instrument are displayed as a diagnostic message in alternation with the operational display.

Operational display in alarm condition	Diagnostic message

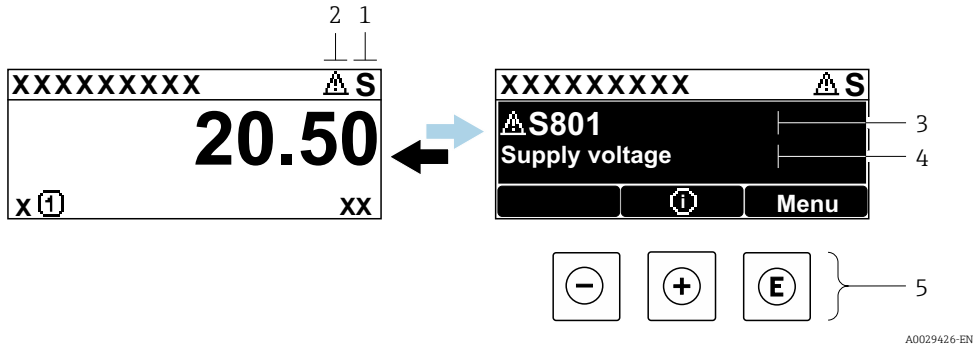

1 *Status signal*
2 *Diagnostic behavior*
3 *Diagnostic behavior with diagnostic code*
4 *Event text*
5 *Operating elements*

If two or more diagnostic events are pending simultaneously, only the message of the diagnostic event with the highest priority is shown.

Other diagnostic events that have occurred can be displayed in the **Diagnostics** menu:
- Via parameter → 182
- Via submenus → 183

Status signals

The status signals provide information on the state and reliability of the device by categorizing the cause of the diagnostic information (diagnostic event).

The status signals are categorized in accordance with VDI/VDE 2650 and NAMUR Recommendation NE 107:
- F = Failure
- C = Function Check
- S = Out of Specification
- M = Maintenance Required

Symbol	Meaning
F	**Failure** A device error has occurred. The measured value is no longer valid.
C	**Function check** The device is in the service mode (e.g. during a simulation).
S	**Out of specification** The device is being operated: Outside its technical specification limits (e.g. outside the process temperature range)
M	**Maintenance required** Maintenance is required. The measured value remains valid.

Diagnostic behavior

Symbol	Meaning
	Alarm ▪ Measurement is interrupted. ▪ Signal outputs and totalizers assume the defined alarm condition. ▪ A diagnostic message is generated.
	Warning ▪ Measurement is resumed. ▪ The signal outputs and totalizers are not affected. ▪ A diagnostic message is generated.

Diagnostic information

The fault can be identified using the diagnostic information. The short text helps you by providing information about the fault. In addition, the corresponding symbol for the diagnostic behavior is displayed in front of the diagnostic information on the local display.

Operating elements

Operating key	Meaning
	Plus key *In menu, submenu* Opens the message about the remedial measures.
	Enter key *In menu, submenu* Opens the operating menu.

12.3.2 Calling up remedial actions

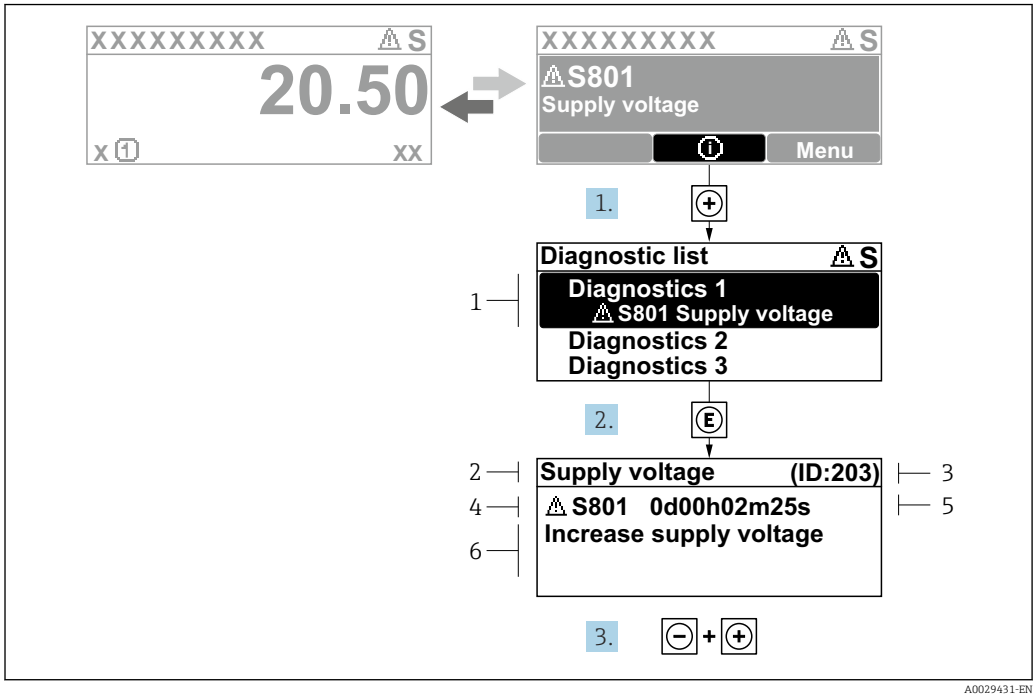

29 *Message for remedial actions*

1 *Diagnostic information*
2 *Event text*
3 *Service ID*
4 *Diagnostic behavior with diagnostic code*
5 *Operating time of occurrence*
6 *Remedial actions*

1. The user is in the diagnostic message.
   Press ⊞ (ⓘ symbol).
   ↳ The **Diagnostic list** submenu opens.
2. Select the desired diagnostic event with ⊞ or ⊟ and press Ⓔ .
   ↳ The message about the remedial measures opens.
3. Press ⊟ + ⊞ simultaneously.
   ↳ The message about the remedial measures closes.

The user is in the **Diagnostics** menu in the **Diagnostic list** submenu. A list of active diagnostics is displayed. The user can select a diagnostic event.

1. Press Ⓔ.
   ↳ The message for the remedial actions for the selected diagnostic event opens.
2. Press ⊟ + ⊞ simultaneously.
   ↳ The message about the remedial actions closes.

12.4 Diagnostic information in the web browser

12.4.1 Diagnostic options

Any faults detected by the measuring device are displayed in the Web browser on the home page once the user has logged on.

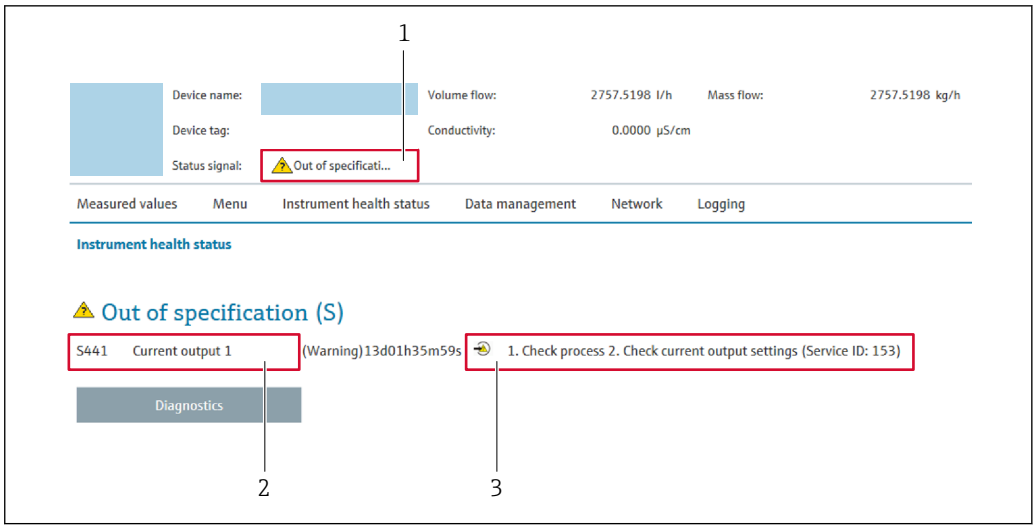

A0031056

1 *Status area with status signal*
2 *Diagnostic information*
3 *Remedial measures with service ID*

In addition, diagnostic events which have occurred can be shown in the **Diagnostics** menu:
- Via parameter → 📄 182
- Via submenu → 📄 183

Status signals

The status signals provide information on the state and reliability of the device by categorizing the cause of the diagnostic information (diagnostic event).

Symbol	Meaning
⊗	**Failure** A device error has occurred. The measured value is no longer valid.
▽	**Function check** The device is in service mode (e.g. during a simulation).
⚠	**Out of specification** The device is being operated: Outside its technical specification limits (e.g. outside the process temperature range)
◇	**Maintenance required** Maintenance is required. The measured value remains valid.

The status signals are categorized in accordance with VDI/VDE 2650 and NAMUR Recommendation NE 107.

12.4.2 Calling up remedial actions

Remedial actions are provided for each diagnostic event to ensure that problems can be rectified quickly. These actions are displayed along with the diagnostic event and the related diagnostic information.

12.5 Diagnostic information in FieldCare or DeviceCare

12.5.1 Diagnostic options

Any faults detected by the measuring device are displayed on the home page of the operating tool once the connection has been established.

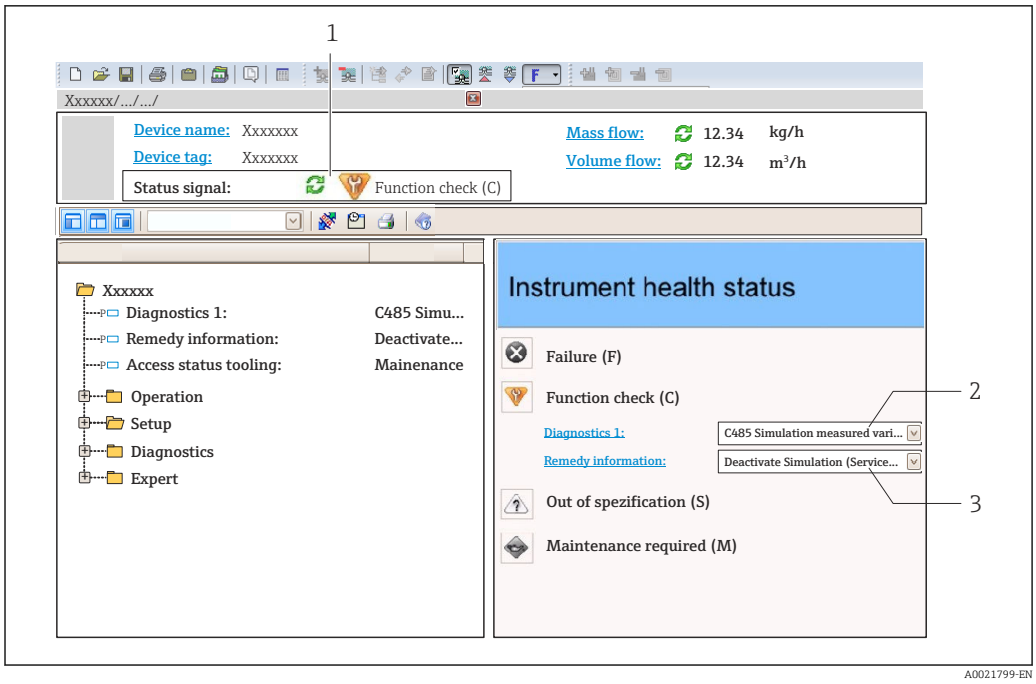

1 *Status area with status signal* → 📄 *172*
2 *Diagnostic information* → 📄 *173*
3 *Remedial actions with service ID*

In addition, diagnostic events which have occurred can be shown in the **Diagnostics** menu:
- Via parameter → 📄 182
- Via submenu → 📄 183

Diagnostic information

The fault can be identified using the diagnostic information. The short text helps you by providing information about the fault. In addition, the corresponding symbol for the diagnostic behavior is displayed in front of the diagnostic information on the local display.

12.5.2 Calling up remedy information

Remedy information is provided for every diagnostic event to ensure that problems can be rectified quickly:
- On the home page
  Remedy information is displayed in a separate field below the diagnostics information.
- In the **Diagnostics** menu
  Remedy information can be called up in the working area of the user interface.

The user is in the **Diagnostics** menu.

1. Call up the desired parameter.
2. On the right in the working area, mouse over the parameter.
   ↳ A tool tip with remedy information for the diagnostic event appears.

12.6 Diagnostic information via communication interface

12.6.1 Reading out diagnostic information

Diagnostic information can be read out via the Modbus register addresses.

- Via register address **6821** (data type = string): diagnostic code, e.g. F270
- Via register address **6859** (data type = integer): diagnostic number, e.g. 270

For an overview of diagnostic events with diagnosis number and diagnosis code → 177

12.6.2 Configuring error response mode

The error response mode for Modbus communication can be configured in the **Modbus configuration** submenu using 1 parameter.

Navigation path
Setup → Communication

Parameter overview with brief description

Parameter	Description	Options	Factory setting
Failure mode	Select measured value output behavior when a diagnostic message occurs via Modbus communication. The effect of this parameter depends on the option selected in the **Assign diagnostic behavior** parameter.	▪ NaN value ▪ Last valid value NaN ≡ not a number	NaN value

12.7 Adapting the diagnostic information

12.7.1 Adapting the diagnostic behavior

Each item of diagnostic information is assigned a specific diagnostic behavior at the factory. The user can change this assignment for specific diagnostic information in the **Diagnostic behavior** submenu.

Expert → System → Diagnostic handling → Diagnostic behavior

You can assign the following options to the diagnostic number as the diagnostic behavior:

Options	Description
Alarm	The background lighting changes to red.
Warning	
Logbook entry only	The device continues to measure. The diagnostic message is only displayed in the **Event logbook** submenu (**Event list** submenu) and is not displayed in alternating sequence with the operational display.
Off	The diagnostic event is ignored, and no diagnostic message is generated or entered.

12.8 Overview of diagnostic information

The amount of diagnostic information and the number of measured variables affected increase if the measuring device has one or more application packages.

Diagnostic number	Short text	Remedy instructions	Status signal [from the factory]	Diagnostic behavior [from the factory]
Diagnostic of sensor				
002	Sensor unknown	1. Check if the correct sensor is mounted 2. Check if the 2-D matrix code on the sensor is undamaged	F	Alarm
022	Temperature sensor defective	1. If available: Check connection cable between sensor and transmitter 2. Check or replace sensor electronic module (ISEM) 3. Replace sensor	F	Alarm
046	Sensor limit 1 exceeded	1. Check process conditions 2. Check sensor	S	Warning [1)]
062	Sensor connection faulty	1. If available: Check connection cable between sensor and transmitter 2. Check or replace sensor electronic module (ISEM) 3. Replace sensor	F	Alarm
063	Exciter current faulty	1. If available: Check connection cable between sensor and transmitter 2. Check or replace sensor electronic module (ISEM) 3. Replace sensor	F	Alarm
082	Data storage inconsistent	Check module connections	F	Alarm
083	Memory content inconsistent	1. Restart device 2. Restore S-DAT data 3. Replace S-DAT	F	Alarm
119	Sensor initialization active	Sensor initialization in progress, please wait	C	Warning
140	Sensor signal asymmetrical	1. If available: Check connection cable between sensor and transmitter 2. Check or replace sensor electronic module (ISEM) 3. Replace sensor	S	Alarm [1)]
141	Zero adjustment failed	1. Check process conditions 2. Repeat commissioning procedure 3. Check sensor	F	Alarm
142	Sensor index coil asymmetry too high	Check sensor	S	Warning [1)]
144	Measurement error too high	1. Check process conditions 2. Check or change sensor	F	Alarm [1)]
Diagnostic of electronic				
201	Electronics faulty	1. Restart device 2. Replace electronics	F	Alarm
242	Firmware incompatible	1. Check firmware version 2. Flash or replace electronic module	F	Alarm
252	Module incompatible	1. Check electronic modules 2. Check if correct modules are available (e.g. NEx, Ex) 3. Replace electronic modules	F	Alarm
262	Module connection interrupted	1. Check or replace connection cable between sensor electronic module (ISEM) and main electronics 2. Check or replace ISEM or main electronics	F	Alarm

Diagnostic number	Short text	Remedy instructions	Status signal [from the factory]	Diagnostic behavior [from the factory]
270	Main electronics defective	1. Restart device 2. Replace main electronic module	F	Alarm
271	Main electronics faulty	1. Restart device 2. Replace main electronic module	F	Alarm
272	Main electronics faulty	Restart device	F	Alarm
273	Main electronics defective	1. Pay attention to display emergency operation 2. Replace main electronics	F	Alarm
275	I/O module 1 to n defective	Change I/O module	F	Alarm
276	I/O module 1 to n faulty	1. Restart device 2. Change I/O module	F	Alarm
283	Memory content inconsistent	Restart device	F	Alarm
302	Device verification active	Device verification in progress, please wait.	C	Warning [1)]
303	I/O 1 to n configuration changed	1. Apply I/O module configuration (parameter "Apply I/O configuration") 2. Afterwards reload device description and check wiring	M	Warning
304	Device verification failed	1. Check verification report 2. Repeat commissioning procedure 3. Check sensor	F	Alarm [1)]
311	Sensor electronics (ISEM) faulty	Maintenance required! Do not reset device	M	Warning
330	Flash file invalid	1. Update firmware of device 2. Restart device	M	Warning
331	Firmware update failed	1. Update firmware of device 2. Restart device	F	Warning
332	Writing in HistoROM backup failed	1. Replace user interface board 2. Ex d/XP: replace transmitter	F	Alarm
361	I/O module 1 to n faulty	1. Restart device 2. Check electronic modules 3. Change I/O module or main electronics	F	Alarm
369	Matrix code scanner defective	Replace matrix code scanner	F	Alarm
371	Temperature sensor defective	Contact service	M	Warning
372	Sensor electronics (ISEM) faulty	1. Restart device 2. Check if failure recurs 3. Replace sensor electronic module (ISEM)	F	Alarm
373	Sensor electronics (ISEM) faulty	Transfer data or reset device	F	Alarm
374	Sensor electronics (ISEM) faulty	1. Restart device 2. Check if failure recurs 3. Replace sensor electronic module (ISEM)	S	Warning [1)]

Diagnostic number	Short text	Remedy instructions	Status signal [from the factory]	Diagnostic behavior [from the factory]
375	I/O- 1 to n communication failed	1. Restart device 2. Check if failure recurs 3. Replace module rack inclusive electronic modules	F	Alarm
378	Supply voltage ISEM faulty	1. If available: Check connection cable between sensor and transmitter 2. Replace main electronic module 3. Replace sensor electronic module (ISEM)	F	Alarm
382	Data storage	1. Insert T-DAT 2. Replace T-DAT	F	Alarm
383	Memory content	Reset device	F	Alarm
387	HistoROM data faulty	Contact service	F	Alarm
Diagnostic of configuration				
410	Data transfer failed	1. Retry data transfer 2. Check connection	F	Alarm
412	Processing download	Download is being processed, please wait.	C	Warning
431	Trim 1 to n required	Carry out trim	M	Warning
437	Parameterization incompatible	1. Update firmware 2. Execute factory reset	F	Alarm
438	Dataset different	1. Check dataset file 2. Check device parameterization 3. Download new device parameterization	M	Warning
441	Current output 1 to n saturated	1. Check current output settings 2. Check process	S	Warning [1)]
442	Frequency output 1 to n saturated	1. Check frequency output settings 2. Check process	S	Warning [1)]
443	Pulse output 1 to n saturated	1. Check pulse output settings 2. Check process	S	Warning [1)]
444	Current input 1 to n saturated	1. Check current input settings 2. Check connected device 3. Check process	S	Warning [1)]
453	Flow override active	Deactivate flow override	C	Warning
484	Failure mode simulation active	Deactivate simulation	C	Alarm
485	Process variable simulation active	Deactivate simulation	C	Warning
486	Current input 1 to n simulation active	Deactivate simulation	C	Warning
491	Current output 1 to n simulation active	Deactivate simulation	C	Warning
492	Frequency output 1 to n simulation active	Deactivate simulation frequency output	C	Warning
493	Pulse output 1 to n simulation active	Deactivate simulation pulse output	C	Warning
494	Switch output 1 to n simulation active	Deactivate simulation switch output	C	Warning
495	Diagnostic event simulation active	Deactivate simulation	C	Warning

Diagnostic number	Short text	Remedy instructions	Status signal [from the factory]	Diagnostic behavior [from the factory]
496	Status input 1 to n simulation active	Deactivate status input simulation	C	Warning
502	CT activation/ deactivation failed	Follow the sequence of the custody transfer activation/deactivation: First authorized user login, then set the DIP switch on the main electonic module	C	Warning
520	I/O 1 to n hardware configuration invalid	1. Check I/O hardware configuration 2. Replace wrong I/O module 3. Plug the module of double pulse output on correct slot	F	Alarm
528	Concentration calculation not possible	Out of valid range of the selected calculation algorithm 1. Check concentration settings 2. Check measured values, e.g. density or temperature	S	Alarm
529	Concentration calculation not accurate	Out of valid range of the selected calculation algorithm 1. Check concentration settings 2. Check measured values, e.g. density or temperature	S	Warning
537	Configuration	1. Check IP addresses in network 2. Change IP address	F	Warning
540	Custody transfer mode failed	1. Power off device and toggle DIP switch 2. Deactivate custody transfer mode 3. Reactivate custody transfer mode 4. Check electronic components	F	Alarm
543	Double pulse output	1. Check process 2. Check pulse output settings	S	Warning [1)]
593	Double pulse output 1 simulation	Deactivate simulation pulse output	C	Warning
594	Relay output 1 to n simulation active	Deactivate simulation switch output	C	Warning
599	Custody transfer logbook full	1. Deactivate custody transfer mode 2. Clear custody transfer logbook (all 30 entries) 3. Activate custody transfer mode	F	Warning [1)]
Diagnostic of process				
803	Loop current 1 faulty	1. Check wiring 2. Change I/O module	F	Alarm
811	APL connection faulty	Connect field device only to APL spur port	F	Alarm
830	Ambient temperature too high	Reduce ambient temp. around the sensor housing	S	Warning [1)]
831	Ambient temperature too low	Increase ambient temp. around the sensor housing	S	Warning [1)]
832	Electronics temperature too high	Reduce ambient temperature	S	Warning [1)]
833	Electronics temperature too low	Increase ambient temperature	S	Warning [1)]
834	Process temperature too high	Reduce process temperature	S	Warning [1)]
835	Process temperature too low	Increase process temperature	S	Warning [1)]

Diagnostic number	Short text	Remedy instructions	Status signal [from the factory]	Diagnostic behavior [from the factory]
842	Process value below limit	Low flow cut off active! Check low flow cut off configuration	S	Warning [1)]
862	Partly filled pipe	1. Check for gas in process 2. Adjust detection limits	S	Warning [1)]
882	Input signal faulty	1. Check input signal parameterization 2. Check external device 3. Check process conditions	F	Alarm
910	Tubes not oscillating	1. If available: Check connection cable between sensor and transmitter 2. Check or replace sensor electronic module (ISEM) 3. Check sensor	F	Alarm
912	Medium inhomogeneous	1. Check process cond. 2. Increase system pressure	S	Warning [1)]
913	Medium unsuitable	1. Check process conditions 2. Check electronic modules or sensor	S	Warning [1)]
915	Viscosity ouf of specification	1. Avoid 2-phase flow 2. Increase system pressure 3. Verify viscosity and density are within range 4. Check process conditions	S	Warning [1)]
941	API/ASTM temperature out of specificat.	1. Check process temperature with selected API/ASTM commodity group 2. Check API/ASTM-related parameters	S	Warning [1)]
942	API/ASTM density out of specification	1. Check process density with selected API/ASTM commodity group 2. Check API/ASTM-related parameters	S	Warning [1)]
943	API pressure out of specification	1. Check process pressure with selected API commodity group 2. Check API related parameters	S	Warning [1)]
944	Monitoring failed	Check process conditions for Heartbeat Monitoring	S	Warning [1)]
948	Oscillation damping too high	Check process conditions	S	Warning [1)]
984	Condensation risk	1. Decrease ambient temperature 2. Increase medium temperature	S	Warning [1)]

1) Diagnostic behavior can be changed.

12.9 Pending diagnostic events

The **Diagnostics** menu allows the user to view the current diagnostic event and the previous diagnostic event separately.

To call up the remedial actions to rectify a diagnostic event:
- Via local display → 172
- Via web browser → 174
- Via "FieldCare" operating tool → 175
- Via "DeviceCare" operating tool → 175

Other pending diagnostic events can be displayed in the **Diagnostic list** submenu → 183.

Navigation
"Diagnostics" menu

Diagnostics	
Actual diagnostics	→ 183
Previous diagnostics	→ 183
Operating time from restart	→ 183
Operating time	→ 183

Parameter overview with brief description

Parameter	Prerequisite	Description	User interface
Actual diagnostics	A diagnostic event has occurred.	Shows the current occured diagnostic event along with its diagnostic information. If two or more messages occur simultaneously, the message with the highest priority is shown on the display.	Symbol for diagnostic behavior, diagnostic code and short message.
Previous diagnostics	Two diagnostic events have already occurred.	Shows the diagnostic event that occurred prior to the current diagnostic event along with its diagnostic information.	Symbol for diagnostic behavior, diagnostic code and short message.
Operating time from restart	–	Shows the time the device has been in operation since the last device restart.	Days (d), hours (h), minutes (m) and seconds (s)
Operating time	–	Indicates how long the device has been in operation.	Days (d), hours (h), minutes (m) and seconds (s)

12.10 Diagnostic list

Up to 5 currently pending diagnostic events are displayed in the **Diagnostic list** submenu along with the associated diagnostic information. If more than 5 diagnostic events are pending, the events with the highest priority are shown on the display.

Navigation path
Diagnostics → Diagnostic list

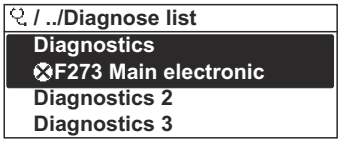

A0014006-EN

30 *Using the example of the local display*

To call up the remedial actions to rectify a diagnostic event:
- Via local display → 172
- Via web browser → 174
- Via "FieldCare" operating tool → 175
- Via "DeviceCare" operating tool → 175

12.11 Event logbook

12.11.1 Reading out the event logbook

A chronological overview of the event messages that have occurred is provided in the **Events list** submenu.

Navigation path
Diagnostics menu → **Event logbook** submenu → Event list

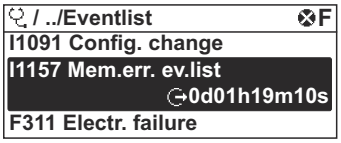

A0014008-EN

31 *Using the example of the local display*

- A maximum of 20 event messages can be displayed in chronological order.
- If the **Extended HistoROM** application package (order option) is enabled in the device, the event list can contain up to 100 entries.

The event history includes entries for:
- Diagnostic events → 177
- Information events → 185

In addition to the operating time when the event occurred, each event is also assigned a symbol that indicates whether the event has occurred or is finished:
- Diagnostic event
  - ⊖: Occurrence of the event
  - ⊖: End of the event
- Information event
  ⊖: Occurrence of the event

To call up the remedial actions to rectify a diagnostic event:
- Via local display → 172
- Via web browser → 174
- Via "FieldCare" operating tool → 175
- Via "DeviceCare" operating tool → 175

For filtering the displayed event messages → 185

12.11.2 Filtering the event logbook

Using the **Filter options** parameter you can define which category of event message is displayed in the **Events list** submenu.

Navigation path
Diagnostics → Event logbook → Filter options

Filter categories
- All
- Failure (F)
- Function check (C)
- Out of specification (S)
- Maintenance required (M)
- Information (I)

12.11.3 Overview of information events

Unlike a diagnostic event, an information event is displayed in the event logbook only and not in the diagnostic list.

Info number	Info name
I1000	--------(Device ok)
I1079	Sensor changed
I1089	Power on
I1090	Configuration reset
I1091	Configuration changed
I1092	HistoROM backup deleted
I1111	Density adjust failure
I11280	ZeroPT verified and adjustm. recommended
I11281	ZeroPT verif. and adjust. not recommend.
I1137	Electronics changed
I1151	History reset
I1155	Reset electronics temperature
I1156	Memory error trend
I1157	Memory error event list
I1209	Density adjustment ok
I1221	Zero point adjust failure
I1222	Zero point adjustment ok
I1256	Display: access status changed
I1278	I/O module restarted
I1335	Firmware changed
I1361	Web server: login failed
I1397	Fieldbus: access status changed
I1398	CDI: access status changed
I1444	Device verification passed
I1445	Device verification failed
I1447	Record application reference data
I1448	Application reference data recorded
I1449	Recording application ref. data failed

Info number	Info name
I1450	Monitoring off
I1451	Monitoring on
I1457	Measurement error verification failed
I1459	I/O module verification failed
I1460	HBSI verification failed
I1461	Sensor verification failed
I1462	Sensor electronic module verific. failed
I1512	Download started
I1513	Download finished
I1514	Upload started
I1515	Upload finished
I1517	Custody transfer active
I1518	Custody transfer inactive
I1618	I/O module 2 replaced
I1619	I/O module 3 replaced
I1621	I/O module 4 replaced
I1622	Calibration changed
I1624	All totalizers reset
I1625	Write protection activated
I1626	Write protection deactivated
I1627	Web server: login successful
I1628	Display: login successful
I1629	CDI: login successful
I1631	Web server access changed
I1632	Display: login failed
I1633	CDI: login failed
I1634	Reset to factory settings
I1635	Reset to delivery settings
I1639	Max. switch cycles number reached
I1643	Custody transfer logbook cleared
I1649	Hardware write protection activated
I1650	Hardware write protection deactivated
I1651	Custody transfer parameter changed
I1712	New flash file received
I1725	Sensor electronic module (ISEM) changed
I1726	Configuration backup failed

12.12 Resetting the device

The entire device configuration or some of the configuration can be reset to a defined state with the **Device reset** parameter (→ 138).

12.12.1 Function scope of the "Device reset" parameter

Options	Description
Cancel	No action is executed and the user exits the parameter.
To delivery settings	Every parameter for which a customer-specific default setting was ordered is reset to the customer-specific value. All other parameters are reset to the factory setting.
Restart device	The restart resets every parameter with data stored in volatile memory (RAM) to the factory setting (e.g. measured value data). The device configuration remains unchanged.

12.13 Device information

The **Device information** submenu contains all parameters that display different information for device identification.

Navigation
"Diagnostics" menu → Device information

▶ Device information	
Device tag	→ 📄 187
Serial number	→ 📄 187
Firmware version	→ 📄 188
Device name	→ 📄 188
Manufacturer	→ 📄 188
Order code	→ 📄 188
Extended order code 1	→ 📄 188
Extended order code 2	→ 📄 188
Extended order code 3	→ 📄 188
ENP version	→ 📄 188

Parameter overview with brief description

Parameter	Description	User interface	Factory setting
Device tag	Shows name of measuring point.	Character string comprising numbers, letters and special characters	Promass
Serial number	Shows the serial number of the measuring device.	Max. 11-digit character string comprising letters and numbers.	–

Parameter	Description	User interface	Factory setting
Firmware version	Shows the device firmware version installed.	Character string in the format xx.yy.zz	–
Device name	Shows the name of the transmitter. The name can be found on the nameplate of the transmitter.	Promass 300/500	–
Manufacturer	Displays the manufacturer.	Character string comprising numbers, letters and special characters	Endress+Hauser
Order code	Shows the device order code. The order code can be found on the nameplate of the sensor and transmitter in the "Order code" field.	Character string composed of letters, numbers and certain punctuation marks (e.g. /).	–
Extended order code 1	Shows the 1st part of the extended order code. The extended order code can also be found on the nameplate of the sensor and transmitter in the "Ext. ord. cd." field.	Character string	–
Extended order code 2	Shows the 2nd part of the extended order code. The extended order code can also be found on the nameplate of the sensor and transmitter in the "Ext. ord. cd." field.	Character string	–
Extended order code 3	Shows the 3rd part of the extended order code. The extended order code can also be found on the nameplate of the sensor and transmitter in the "Ext. ord. cd." field.	Character string	–
ENP version	Shows the version of the electronic nameplate (ENP).	Character string	2.02.00

12.14 Firmware history

Release date	Firmware version	Order code for "Firmware version"	Firmware Changes	Documentation type	Documentation
09.2025	01.00.zz	Option **62**	-	Operating Instructions	BA02404D/06/EN/01.25

It is possible to flash the firmware to the current version or an existing previous version via the service interface. For the compatibility of the firmware version, see the "Device history and compatibility" section

For the compatibility of the firmware version with the installed device description files and operating tools, observe the information about the device in the "Manufacturer's information" document.

The manufacturer's information is available:
- In the Download Area of the Endress+Hauser Web site: www.endress.com → Downloads
- Specify the following details:
  - Product root: e.g. 8F3B
    The product root is the first part of the order code: see the nameplate on the device.
  - Text search: Manufacturer's information
  - Media type: Documentation – Technical Documentation

13 Maintenance

13.1 Maintenance work

No special maintenance work is required.

13.1.1 Exterior cleaning

When cleaning the exterior of measuring devices, always use cleaning agents that do not attack the surface of the housing or the seals.

13.1.2 Internal cleaning

Observe the following points for CIP and SIP cleaning:
- Use only cleaning agents to which the process-wetted materials are adequately resistant.
- Observe the maximum permitted medium temperature for the measuring device .

13.2 Measuring and test equipment

Endress+Hauser offers a variety of measuring and testing equipment, such as Netilion or device tests.

Your Endress+Hauser Sales Center can provide detailed information on the services.

List of some of the measuring and testing equipment: → 194

13.3 Endress+Hauser services

Endress+Hauser offers a wide variety of services for maintenance such as recalibration, maintenance service or device tests.

Your Endress+Hauser Sales Center can provide detailed information on the services.

14 Repair

14.1 General notes

14.1.1 Repair and conversion concept

The Endress+Hauser repair and conversion concept provides for the following:
- The measuring devices have a modular design.
- Spare parts are grouped into logical kits with the associated Installation Instructions.
- Repairs are carried out by Endress+Hauser Service or by appropriately trained customers.
- Certified devices can only be converted to other certified devices by Endress+Hauser Service or at the factory.

14.1.2 Notes for repair and conversion

For repair and conversion of a measuring device, observe the following notes:
- ▶ Use only original Endress+Hauser spare parts.
- ▶ Carry out the repair according to the Installation Instructions.
- ▶ Observe the applicable standards, federal/national regulations, Ex documentation (XA) and certificates.
- ▶ Document all repairs and conversions and enter the details in Netilion Analytics.

14.2 Spare parts

Device Viewer (www.endress.com/deviceviewer):
All the spare parts for the measuring device, along with the order code, are listed here and can be ordered. If available, users can also download the associated Installation Instructions.

Measuring device serial number:
- Is located on the nameplate of the device.
- Can be read out via the **Serial number** parameter (→ 187) in the **Device information** submenu.

14.3 Endress+Hauser services

Endress+Hauser offers a wide range of services.

Your Endress+Hauser Sales Center can provide detailed information on the services.

14.4 Return

The requirements for safe device return can vary depending on the device type and national legislation.

1. Refer to the web page for information: https://www.endress.com
2. If returning the device, pack the device in such a way that it is reliably protected against impact and external influences. The original packaging provides the best protection.

14.5 Disposal

If required by the Directive 2012/19/EU on waste electrical and electronic equipment (WEEE), the product is marked with the depicted symbol in order to minimize the disposal of WEEE as unsorted municipal waste. Do not dispose of products bearing this marking as unsorted municipal waste. Instead, return them to the manufacturer for disposal under the applicable conditions.

14.5.1 Removing the measuring device

1. Switch off the device.

WARNING

Danger to persons from process conditions!

- Beware of hazardous process conditions such as pressure in the measuring device, high temperatures or aggressive media.

2. Carry out the mounting and connection steps from the "Mounting the measuring device" and "Connecting the measuring device" sections in reverse order. Observe the safety instructions.

14.5.2 Disposing of the measuring device

WARNING

Danger to personnel and environment from fluids that are hazardous to health.

- Ensure that the measuring device and all cavities are free of fluid residues that are hazardous to health or the environment, e.g. substances that have permeated into crevices or diffused through plastic.

Observe the following notes during disposal:

- Observe valid federal/national regulations.
- Ensure proper separation and reuse of the device components.

15 Accessories

Various accessories, which can be ordered with the device or subsequently from Endress +Hauser, are available for the device. Detailed information on the order code in question is available from your local Endress+Hauser sales center or on the product page of the Endress+Hauser website: www.endress.com.

15.1 Device-specific accessories

15.1.1 For the transmitter

Accessories	Description
Proline 300 transmitter	Transmitter for replacement or storage. Use the order code to define the following specifications: ▪ Approvals ▪ Output ▪ Input ▪ Display/operation ▪ Housing ▪ Software Order code: 8X3BXX Installation Instructions EA01200D
Remote display and operating module DKX001	▪ If ordered directly with the measuring instrument: Order code for "Display; operation", option O "Remote display 4-line, illuminated; 10 m (30 ft) cable; touch control" ▪ If ordered separately: ▪ Measuring instrument: order code for "Display; operation", option M "W/o, prepared for remote display" ▪ DKX001: Via the separate product structure DKX001 ▪ If ordered subsequently: DKX001: Via the separate product structure DKX001 **Mounting bracket for DKX001** ▪ If ordered directly: order code for "Accessory enclosed", option RA "Mounting bracket, pipe 1/2'" ▪ If ordered subsequently: order number: 71340960 **Connecting cable (replacement cable)** Via the separate product structure: DKX002 Further information on display and operating module DKX001→ 📄 222. Special Documentation SD01763D
External WLAN antenna	External WLAN antenna with 1.5 m (59.1 in) connecting cable and two angle brackets. Order code for "Accessory enclosed", option P8 "Wireless antenna wide area". ▪ The external WLAN antenna is not suitable for use in hygienic applications. ▪ Further information on the WLAN interface → 📄 69 Order number: 71351317 Installation Instructions EA01238D
Protective cover	Is used to protect the measuring instrument from the effects of the weather: e.g. rainwater, excess heating from direct sunlight. Order number: 71343505 Installation Instructions EA01160D

15.1.2 For the sensor

Accessories	Description
Heating jacket	Is used to stabilize the temperature of the fluids in the sensor. Water, water vapor and other non-corrosive liquids are permitted for use as fluids. If using oil as a heating medium, please consult with Endress+Hauser. Heating jackets cannot be used with sensors fitted with a rupture disk. Use the order code with the product root DK8003. Special Documentation SD02156D

15.2 Service-specific accessories

Accessories	Description
Applicator	Software for selecting and sizing Endress+Hauser measuring instruments: ▪ Choice of measuring instruments for industrial requirements ▪ Calculation of all the necessary data for identifying the optimum flowmeter: e.g. nominal diameter, pressure loss, flow velocity and measurement accuracy. ▪ Graphic display of the calculation results ▪ Determination of the partial order code, administration, documentation and access to all project-related data and parameters over the entire life cycle of a project. Applicator is available: Via the Internet: https://portal.endress.com/webapp/applicator
Netilion	IIoT ecosystem: Unlock knowledge With the Netilion IIoT ecosystem,Endress+Hauser allows you to optimize your plant performance, digitize workflows, share knowledge, and enhance collaboration. Drawing upon decades of experience in process automation, Endress+Hauser offers the process industry an IIoT ecosystem designed to effortlessly extract insights from data. These insights can be used to optimize processes, leading to increased plant availability, efficiency, and reliability - ultimately resulting in a more profitable plant. www.netilion.endress.com
FieldCare	FDT-based plant asset management tool from Endress+Hauser. It can configure all intelligent field units in your system and helps you manage them. By using the status information, it is also a simple but effective way of checking their status and condition. Operating Instructions BA00027S and BA00059S
DeviceCare	Tool to connect and configure Endress+Hauser field devices. Innovation brochure IN01047S

15.3 System components

Accessories	Description
Memograph M graphic data manager	The Memograph M graphic data manager provides information on all the relevant measured variables. Measured values are recorded correctly, limit values are monitored and measuring points analyzed. The data are stored in the 256 MB internal memory and also on a SD card or USB stick. ▪ Technical Information TI00133R ▪ Operating Instructions BA00247R
Cerabar M	The pressure transmitter for measuring the absolute and gauge pressure of gases, steam and liquids. It can be used to read in the operating pressure value. ▪ Technical Information TI00426P and TI00436P ▪ Operating Instructions BA00200P and BA00382P
Cerabar S	The pressure transmitter for measuring the absolute and gauge pressure of gases, steam and liquids. It can be used to read in the operating pressure value. ▪ Technical Information TI00383P ▪ Operating Instructions BA00271P
iTEMP	The temperature transmitters can be used in all applications and are suitable for the measurement of gases, steam and liquids. They can be used to read in the medium temperature. "Fields of Activity" document FA00006T

16 Technical data

16.1 Application

The measuring device is intended only for the flow measurement of liquids and gases.

Depending on the version ordered, the measuring device can also measure potentially explosive, flammable, poisonous and oxidizing media.

To ensure that the device remains in proper operating condition for its service life, use the measuring device only for media against which the process-wetted materials are sufficiently resistant.

16.2 Function and system design

Measuring principle	Mass flow measurement based on the Coriolis measuring principle
Measuring system	The device consists of a transmitter and a sensor. The device is available as a compact version: The transmitter and sensor form a mechanical unit. For information on the structure of the measuring instrument → 📄 14

16.3 Input

Measured variable

Direct measured variables

- Mass flow
- Density
- Temperature

Calculated measured variables

- Volume flow
- Corrected volume flow
- Reference density

Measuring range

Measuring range for liquids

DN		Measuring range full scale values $\dot{m}_{min(F)}$ to $\dot{m}_{max(F)}$	
[mm]	[in]	[kg/h]	[lb/min]
8	⅜	0 to 2 000	0 to 73.50
15	½	0 to 6 500	0 to 238.9
25	1	0 to 18 000	0 to 661.5
40	1½	0 to 45 000	0 to 1 654
50	2	0 to 70 000	0 to 2 573
80	3	0 to 180 000	0 to 6 615
100	4	0 to 350 000	0 to 12 860
150	6	0 to 800 000	0 to 29 400
250	10	0 to 2 200 000	0 to 80 850

Measuring range for gases

The full scale value depends on the density and the speed of sound of the gas used. The full scale value can be calculated with the following formulas:

$\dot{m}_{max(G)} = (\rho_G \cdot (c_G/m) \cdot d_i^2 \cdot (\pi/4) \cdot 3600 \cdot n)$

$\dot{m}_{max(G)}$	Maximum full scale value for gas [kg/h]
ρ_G	Gas density in [kg/m³] at operating conditions
c_G	Speed of sound (gas) [m/s]
d_i	Measuring tube internal diameter [m]
π	Pi
n = 2	Number of measuring tubes
m = 2	For all gases other than pure H2 and He gas
m = 3	For pure H2 and He gas

Recommended measuring range

Flow limit → 📖 217

Operable flow range

Over 1000 : 1.

Flow rates above the preset full scale value do not override the electronics unit, with the result that the totalizer values are registered correctly.

Input signal

External measured values

To increase the measurement accuracy of certain measured variables or to calculate the corrected volume flow for gases, the automation system can continuously write different measured values to the measuring instrument:
- Operating pressure to increase measurement accuracy (Endress+Hauser recommends the use of a pressure measuring instrument for absolute pressure, e.g. Cerabar M or Cerabar S)
- Medium temperature to increase measurement accuracy (e.g. iTEMP)
- Reference density for calculating the corrected volume flow for gases

Various pressure and temperature measuring devices can be ordered from Endress+Hauser: see "Accessories" section → 195

It is recommended to read in external measured values to calculate the corrected volume flow.

Current input

The measured values are written from the automation system to the measuring device via the current input → 198.

Digital communication

The measured values are written by the automation system via Modbus TCP-Ethernet-APL.

Current input 0/4 to 20 mA

Current input	0/4 to 20 mA (active/passive)
Current span	▪ 4 to 20 mA (active) ▪ 0/4 to 20 mA (passive)
Resolution	1 µA
Voltage drop	Typically: 0.6 to 2 V for 3.6 to 22 mA (passive)
Maximum input voltage	≤ 30 V (passive)
Open-circuit voltage	≤ 28.8 V (active)
Possible input variables	▪ Pressure ▪ Temperature ▪ Density

Status input

Maximum input values	▪ DC −3 to 30 V ▪ If status input is active (ON): R_i >3 kΩ
Response time	Configurable: 5 to 200 ms
Input signal level	▪ Low signal: DC −3 to +5 V ▪ High signal: DC 12 to 30 V
Assignable functions	▪ Off ▪ Reset the individual totalizers separately ▪ Reset all totalizers ▪ Flow override

16.4 Output

Output signal

Modbus TCP over Ethernet-APL

Port 1: Modbus TCP over Ethernet-APL 10 Mbit/s	

Device usage	**Device connection to an APL field switch (terminal 26/27)**
	The device may only be operated according to the following APL port classifications:
	▪ If used in hazardous areas: SLAA or SLAC [1)]
	▪ If used in non-hazardous areas: SLAX
	Connection values of APL field switch (corresponds to APL port classification SPCC or SPAA, for instance):
	▪ Maximum input voltage: 15 V_{DC}
	▪ Minimum output values: 0.54 W
	Device connection to an SPE switch
	▪ In non-hazardous areas, the device can be used with an appropriate SPE switch:
	  ▪ Maximum output voltage: 30 V_{DC}
	  ▪ Minimum output power: 1.85 W
	▪ The SPE switch must support the 10BASE-T1L standard and PoDL power classes 10, 11 or 12 and have a function to disable power class detection.

Standards	According to IEEE 802.3cg, APL port profile specification v1.0, galvanically isolated
Data transfer	Full-duplex (APL/SPE)
Current consumption	Terminal 26/27 max. approx. 45 mA
Permitted supply voltage	9 to 30 V
Bus connection	Terminal 26/27 with integrated reverse polarity protection

1) For more information on using the device in the hazardous area, see the Ex-specific Safety Instructions

Port 2: Modbus TCP over Ethernet 100 Mbit/s	
Device usage	**Device connection to a Fast Ethernet (RJ45) switch** In non-hazardous areas, the Ethernet switch must support the standard 100BASE-TX.
Standards	In accordance with IEEE 802.3u
Data transfer	Half-duplex, full-duplex
Current consumption	-
Permitted supply voltage	-
Bus connection	Service interface (RJ45)

Current output 4 to 20 mA

Signal mode	Can be set to: ▪ Active ▪ Passive
Current range	Can be set to: ▪ 4 to 20 mA NAMUR ▪ 4 to 20 mA US ▪ 4 to 20 mA ▪ 0 to 20 mA (only if the signal mode is active) ▪ Fixed current
Maximum output values	22.5 mA
Open-circuit voltage	DC 28.8 V (active)

Maximum input voltage	DC 30 V (passive)
Load	0 to 700 Ω
Resolution	0.38 µA
Damping	Configurable: 0 to 999.9 s
Assignable measured variables	▪ Mass flow ▪ Volume flow ▪ Corrected volume flow ▪ Density ▪ Reference density ▪ Temperature ▪ Electronics temperature ▪ Oscillation frequency 0 ▪ Oscillation damping 0 ▪ Signal asymmetry ▪ Exciter current 0 The range of options increases if the measuring device has one or more application packages.

Pulse/frequency/switch output

Function	Can be configured as pulse, frequency or switch output
Version	Open collector Can be set to: ▪ Active ▪ Passive ▪ Passive NAMUR Ex-i, passive
Maximum input values	DC 30 V, 250 mA (passive)
Open-circuit voltage	DC 28.8 V (active)
Voltage drop	For 22.5 mA: ≤ DC 2 V
Pulse output	
Maximum input values	DC 30 V, 250 mA (passive)
Maximum output current	22.5 mA (active)
Open-circuit voltage	DC 28.8 V (active)
Pulse width	Configurable: 0.05 to 2 000 ms
Maximum pulse rate	10 000 Impulse/s
Pulse value	Configurable
Assignable measured variables	▪ Mass flow ▪ Volume flow ▪ Corrected volume flow The range of options increases if the measuring device has one or more application packages.
Frequency output	
Maximum input values	DC 30 V, 250 mA (passive)
Maximum output current	22.5 mA (active)
Open-circuit voltage	DC 28.8 V (active)
Output frequency	Configurable: end value frequency 2 to 10 000 Hz(f_{max} = 12 500 Hz)
Damping	Configurable: 0 to 999.9 s
Pulse/pause ratio	1:1

Assignable measured variables	▪ Mass flow ▪ Volume flow ▪ Corrected volume flow ▪ Density ▪ Reference density ▪ Temperature ▪ Electronics temperature ▪ Oscillation frequency 0 ▪ Oscillation damping 0 ▪ Signal asymmetry ▪ Exciter current 0 The range of options increases if the measuring device has one or more application packages.
Switch output	
Maximum input values	DC 30 V, 250 mA (passive)
Open-circuit voltage	DC 28.8 V (active)
Switching behavior	Binary, conductive or non-conductive
Switching delay	Configurable: 0 to 100 s
Number of switching cycles	Unlimited

Assignable functions	▪ Disable
	▪ On
	▪ Diagnostic behavior
	▪ Limit
	  ▪ Mass flow
	  ▪ Volume flow
	  ▪ Corrected volume flow
	  ▪ Density
	  ▪ Reference density
	  ▪ Temperature
	  ▪ Totalizer 1-3
	▪ Flow direction monitoring
	▪ Status
	  ▪ Partially filled pipe detection
	  ▪ Low flow cut off
	The range of options increases if the measuring device has one or more application packages.

Double pulse output

Function	Double pulse
Version	Open collector Can be set to: ▪ Active ▪ Passive ▪ Passive NAMUR
Maximum input values	DC 30 V, 250 mA (passive)
Open-circuit voltage	DC 28.8 V (active)
Voltage drop	For 22.5 mA: ≤ DC 2 V
Output frequency	Configurable: 0 to 1000 Hz
Damping	Configurable: 0 to 999 s

Pulse/pause ratio	1:1
Assignable measured variables	▪ Mass flow ▪ Volume flow ▪ Corrected volume flow ▪ Density ▪ Reference density ▪ Temperature The range of options increases if the measuring device has one or more application packages.

Relay output

Function	Switch output
Version	Relay output, galvanically isolated
Switching behavior	Can be set to: ▪ NO (normally open), factory setting ▪ NC (normally closed)
Maximum switching capacity (passive)	▪ DC 30 V, 0.1 A ▪ AC 30 V, 0.5 A

Assignable functions	▪ Disable
	▪ On
	▪ Diagnostic behavior
	▪ Limit
	  ▪ Mass flow
	  ▪ Volume flow
	  ▪ Corrected volume flow
	  ▪ Density
	  ▪ Reference density
	  ▪ Temperature
	  ▪ Totalizer 1-3
	▪ Flow direction monitoring
	▪ Status
	  ▪ Partially filled pipe detection
	  ▪ Low flow cut off
	The range of options increases if the measuring device has one or more application packages.

User-configurable input/output

One specific input or output is assigned to a user-configurable input/output (configurable I/O) during device commissioning.

The following inputs and outputs are available for assignment:
- Choice of current output: 4 to 20 mA (active), 0/4 to 20 mA (passive)
- Pulse/frequency/switch output
- Choice of current input: 4 to 20 mA (active), 0/4 to 20 mA (passive)
- Status input

Signal on alarm

Depending on the interface, failure information is displayed as follows:

Modbus TCP over Ethernet-APL/SPE/Fast Ethernet

Failure mode	Choose from: ▪ NaN value instead of current value ▪ Last valid value

Current output

Current output 4-20 mA	
Failure mode	Configurable: ▪ 4 to 20 mA in accordance with NAMUR recommendation NE 43 ▪ 4 to 20 mA in accordance with US ▪ Min. value: 3.59 mA ▪ Max. value: 22.5 mA ▪ Definable value between: 3.59 to 22.5 mA ▪ Actual value ▪ Last valid value
Current output 4-20 mA	
Failure mode	Configurable: ▪ Maximum alarm: 22 mA ▪ Definable value between: 0 to 20.5 mA

Pulse/frequency/switch output

Pulse output	
Failure mode	Configurable: ▪ Actual value ▪ No pulses
Frequency output	
Failure mode	Configurable: ▪ Actual value ▪ 0 Hz ▪ Definable value between: 2 to 12 500 Hz
Switch output	
Failure mode	Configurable: ▪ Current status ▪ Open ▪ Closed

Relay output

Failure mode	Choose from: ▪ Current status ▪ Open ▪ Closed

Local display

Plain text display	With information on cause and remedial measures
Backlight	Red lighting indicates a device error.

Status signal as per NAMUR recommendation NE 107

Interface/protocol

- Via digital communication:
  Modbus TCP over Ethernet-APL
- Via service interface
  - Via service interface/port 2: (RJ45)
  - WLAN interface
- Plain text display
  - With information on cause and remedial action
  - Modbus TCP

Web browser

Plain text display	With information on cause and remedial measures

LEDs

Status information	Status indicated by various LEDs The following information is displayed depending on the device version: ▪ Supply voltage active ▪ Data transmission active ▪ Device alarm/error has occurred ▪ Network available ▪ Connection established ▪ Diagnostic status Diagnostic information via LEDs → 171

Low flow cut off

The switch points for low flow cut off are user-selectable.

Galvanic isolation

The outputs are galvanically isolated:
- from the power supply
- from one another
- from the potential equalization (PE) connection

Modbus TCP over Ethernet-APL

Port 1: Modbus TCP over Ethernet-APL 10 Mbit/s, SPE 10 Mbit/s	
Protocol	▪ Modbus application protocol V1.1 ▪ TCP
Response times	On Modbus client request: Typically 3 to 5 ms
TCP port	502
Modbus TCP connections	Maximum 4
Communication type	Ethernet Advanced Physical Layer 10BASE-T1L
Data transfer	Full-duplex
Polarity	Automatic correction of crossed "APL signal + " and "APL signal -" signal lines
Device type	Address
Device type ID	0xC43B
Function codes	▪ 03: Read holding register ▪ 04: Read input register ▪ 06: Write single registers ▪ 16: Write multiple registers ▪ 23: Read/write multiple registers ▪ 43: Read device identification

Broadcast support for function codes	▪ 06: Write single registers ▪ 16: Write multiple registers ▪ 23: Read/write multiple registers ▪ 43: Read device identification
Supported transfer speed	10 Mbit/s (Ethernet-APL)
Supported features	Address can be configured using DHCP, web server or software
Device description files (FDI)	Information and files available at: www.endress.com → Downloads area
Configuration options for measuring instrument	▪ Asset management software (FieldCare, DeviceCare, Field Expert) ▪ Integrated web server via web browser and IP address ▪ Onsite operation
Supported functions	▪ Device identification using: Nameplate ▪ Measured value status The process variables are communicated with a measured value status ▪ Blinking feature via the local display for simple device identification and assignment ▪ Device operation via asset management software (e.g. FieldCare, DeviceCare)
System integration	Information regarding system integration . ▪ Overview and description of the supported function codes ▪ Status coding ▪ Factory setting

Port 2: Modbus TCP over Ethernet 100 Mbit/s	
Protocol	▪ Modbus application protocol V1.1 ▪ TCP
Response times	On Modbus client request: Typically 3 to 5 ms
TCP port	502
Modbus TCP connections	Maximum 4
Communication type	▪ 10BASE-T ▪ 100BASE-TX
Data transfer	Half-duplex, full-duplex
Polarity	Auto-MDIX
Device type	Address
Device type ID	0xC43B
Function codes	▪ 03: Read holding register ▪ 04: Read input register ▪ 06: Write single registers ▪ 16: Write multiple registers ▪ 23: Read/write multiple registers ▪ 43: Read device identification
Broadcast support for function codes	▪ 06: Write single registers ▪ 16: Write multiple registers ▪ 23: Read/write multiple registers ▪ 43: Read device identification
Supported transfer speed	▪ 10 Mbit/s ▪ 100 Mbit/s (Fast-Ethernet)
Supported features	Address can be configured using DHCP, web server or software
Device description files (FDI)	Information and files available at: www.endress.com → Downloads area
Configuration options for measuring instrument	▪ Asset management software (FieldCare, DeviceCare, Field Expert) ▪ Integrated web server via web browser and IP address ▪ Onsite operation

Supported functions	▪ Device identification using: Nameplate ▪ Measured value status The process variables are communicated with a measured value status ▪ Device operation via asset management software (e.g. FieldCare, DeviceCare)
System integration	Information regarding system integration . ▪ Overview and description of the supported function codes ▪ Status coding ▪ Factory setting

16.5 Power supply

Terminal assignment

→ 📖 35

Supply voltage

Order code for "Power supply"	Terminal voltage		Frequency range
Option **D**	DC 24 V	±20%	–
Option **E**	AC 100 to 240 V	−15 to 10%	50/60 Hz
Option **I**	DC 24 V	±20%	–
	AC 100 to 240 V	−15 to 10%	50/60 Hz

Power consumption

Transmitter

Max. 10 W (active power)

switch-on current	Max. 36 A (<5 ms) as per NAMUR Recommendation NE 21

Current consumption

Transmitter

- Max. 400 mA (24 V)
- Max. 200 mA (110 V, 50/60 Hz; 230 V, 50/60 Hz)

Power supply failure

- Totalizers stop at the last value measured.
- Depending on the device version, the configuration is retained in the device memory or in the plug-in memory (HistoROM DAT).
- Error messages (incl. total operated hours) are stored.

Overcurrent protection element

The device must be operated with a dedicated circuit breaker, as it does not have an ON/OFF switch of its own.
- The circuit breaker must be easy to reach and labeled accordingly.
- Permitted nominal current of the circuit breaker: 2 A up to maximum 10 A.

Electrical connection

→ 📖 37

Potential equalization

→ 📖 40

Terminals

Spring-loaded terminals: Suitable for strands and strands with ferrules.
Conductor cross-section 0.2 to 2.5 mm^2 (24 to 12 AWG).

Cable entries

- Cable gland: M20 × 1.5 with cable Ø 6 to 12 mm (0.24 to 0.47 in)
- Thread for cable entry:
  - NPT ½"
  - G ½"
  - M20

Cable specification

→ 📄 32

Overvoltage protection

Mains voltage fluctuations	→ 📄 206
Overvoltage category	Overvoltage category II
Short-term, temporary overvoltage	Between cable and ground up to 1200 V, for max. 5 s
Long-term, temporary overvoltage	Between cable and ground up to 500 V

16.6 Performance characteristics

Reference operating conditions

- Error limits based on ISO 11631
- Water
  - +15 to +45 °C (+59 to +113 °F)
  - 2 to 6 bar (29 to 87 psi)
- Data as indicated in the calibration protocol
- Accuracy based on accredited calibration rigs according to ISO 17025

To obtain measured errors, use the *Applicator* sizing tool → 📄 194

Maximum measurement error

o.r. = of reading; 1 g/cm³ = 1 kg/l; T = medium temperature

Base accuracy

Design fundamentals → 📄 212

Mass flow and volume flow (liquids)

- ±0.05 % o.r. (optional for mass flow: PremiumCal; order code for "Calibration flow", option D)
- ±0.10 % o.r. (standard)

Mass flow (gases)

±0.25 % o.r.

Mass flow (cryogenic liquids and gases under −100 °C (−148 °F))

±0.35 % o.r. (order code for "Measuring tube material", option LA)

Density (liquids)

Under reference conditions [g/cm³]	Standard density calibration [g/cm³]	Wide-range Density specification [1) 2)] [g/cm³]	Extended density calibration [3) 4)] [g/cm³]
±0.0005	±0.0005	±0.001	±0.0005

1) Valid range for special density calibration: 0 to 2 g/cm³, +5 to +80 °C (+41 to +176 °F)
2) order code for "Application package", option EE "Special density" (for nominal diameters ≤ 100 DN)
3) Valid range for extended density calibration: 0 to 2 g/cm³, +20 to +60 °C (+68 to +140 °F)
4) order code for "Application package", option E1 "Extended density" "

Density (cryogenic liquids and gases under −100 °C (−148 °F))

±0.05 g/cm³ (order code for "Measuring tube material", option LA)

Temperature

±0.5 °C ± 0.005 · T °C (±0.9 °F ± 0.003 · (T − 32) °F)

Zero point stability

DN		Zero point stability	
[mm]	[in]	[kg/h]	[lb/min]
8	⅜	0.030	0.001
15	½	0.200	0.007
25	1	0.540	0.019
40	1½	2.25	0.083
50	2	3.50	0.129
80	3	9.0	0.330
100	4	14.0	0.514
150	6	32.0	1.17
250	10	88.0	3.23

High-temperature version: order code for "Measuring tube material", option TS, TT, TU

DN		Zero point stability	
[mm]	[in]	[kg/h]	[lb/min]
15	½	0.3	0.011
25	1	1.8	0.0662
50	2	7	0.2573
80	3	18	0.6615
100	4	21	0.7718
150	6	48	1.764
250	10	132	4.851

For devices with low-temperature version, order code for "Measuring tube mat., wetted surface", option LA, please note the following:

NOTICE

Zero point confirmation and zero adjustment are difficult to carry out in the field due to the vaporization of the cryogenic liquid.

- As a general rule, the factory-set zero point should not be changed. Please ensure that the medium is in the liquid phase if a zero adjustment is to be carried out.

Flow values

Flow values as turndown parameters depending on nominal diameter.

SI units

DN	1:1	1:10	1:20	1:50	1:100	1:500
[mm]	[kg/h]	[kg/h]	[kg/h]	[kg/h]	[kg/h]	[kg/h]
8	2000	200	100	40	20	4
15	6500	650	325	130	65	13
25	18000	1800	900	360	180	36
40	45000	4500	2250	900	450	90
50	70000	7000	3500	1400	700	140
80	180000	18000	9000	3600	1800	360
100	350000	35000	17500	7000	3500	700
150	800000	80000	40000	16000	8000	1600
250	2200000	220000	110000	44000	22000	4400

US units

DN	1:1	1:10	1:20	1:50	1:100	1:500
[inch]	[lb/min]	[lb/min]	[lb/min]	[lb/min]	[lb/min]	[lb/min]
⅜	73.50	7.350	3.675	1.470	0.735	0.147
½	238.9	23.89	11.95	4.778	2.389	0.478
1	661.5	66.15	33.08	13.23	6.615	1.323
1½	1654	165.4	82.70	33.08	16.54	3.308
2	2573	257.3	128.7	51.46	25.73	5.146
3	6615	661.5	330.8	132.3	66.15	13.23
4	12860	1286	643.0	257.2	128.6	25.72
6	29400	2940	1470	588	294	58.80
10	80850	8085	4043	1617	808.5	161.7

Accuracy of outputs

The outputs have the following base accuracy specifications.

Current output

Accuracy	±5 µA

Pulse/frequency output

o.r. = of reading

Accuracy	Max. ±50 ppm o.r. (over the entire ambient temperature range)

Repeatability

o.r. = of reading; 1 g/cm^3 = 1 kg/l; T = medium temperature

Base repeatability

Design fundamentals → 212

Mass flow and volume flow (liquids)

±0.025 % o.r. (PremiumCal)
±0.05 % o.r.

Mass flow (gases)

±0.20 % o.r.

Mass flow (cryogenic liquids and gases under −100 °C (−148 °F))

±0.175 % % o.r. (order code for "Measuring tube material", option LA)

Density (liquids)

±0.00025 g/cm^3

Density (cryogenic liquids and gases under −100 °C (−148 °F))

±0.025 g/cm^3 (order code for "Measuring tube material", option LA)

Temperature

±0.25 °C ± 0.0025 · T °C (±0.45 °F ± 0.0015 · (T−32) °F)

Response time

The response time depends on the configuration (damping).

Influence of ambient temperature

Current output

Temperature coefficient	Max. 1 µA/°C

Pulse/frequency output

Temperature coefficient	No additional effect. Included in accuracy.

Influence of medium temperature

Mass flow

o.f.s. = of full scale value

If there is a difference between the temperature during zero adjustment and the process temperature, the additional measurement error of the sensors is typically ±0.0002 %o.f.s./°C (±0.0001 % o. f.s./°F).

The influence is reduced when the zero adjustment is performed at process temperature.

Density

- If there is a difference between the density calibration temperature and the process temperature, the measurement error of the sensors is typically ±0.00005 g/cm^3/°C (±0.000025 g/cm^3/°F). Field density adjustment is possible.
- Can also be used for order code for "Measuring tube material", option LA up to −100 °C (−148 °F).

Wide-range density specification (special density calibration)
If the process temperature is outside the valid range (→ 207) the measurement error is ±0.00005 g/cm³ /°C (±0.000025 g/cm³ /°F)

Extended density specification
If the process temperature is outside the valid range (→ 207) the measurement error is ±0.00005 g/cm³ /°C (±0.000025 g/cm³ /°F)

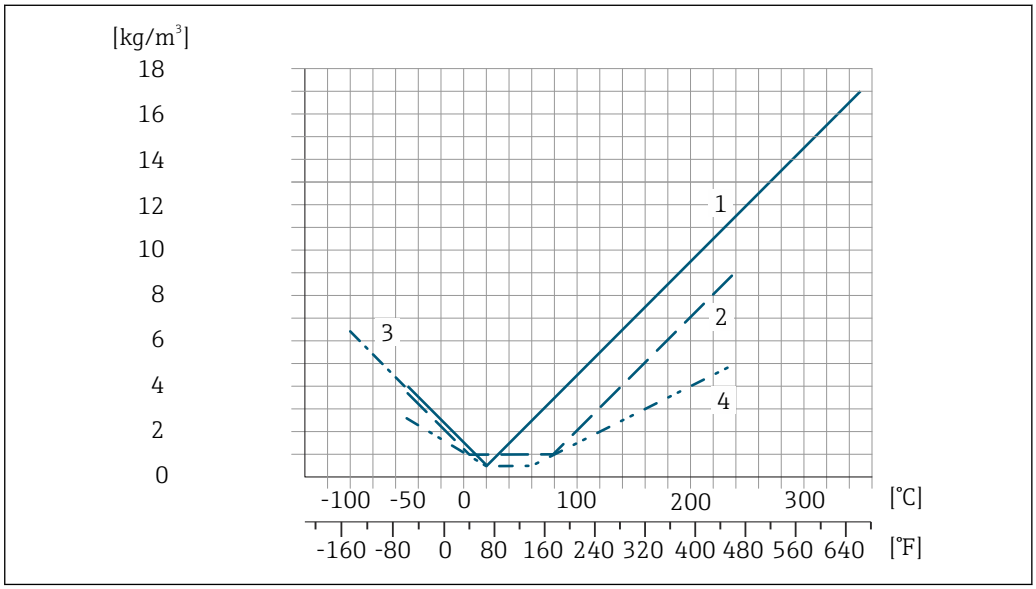

1 *Field density adjustment, for example at +20 °C (+68 °F)*
2 *Special density calibration*
3 *Applicable for the order code for "Measuring tube material", option LA*
4 *Extended density calibration*

Temperature
±0.005 · T °C (± 0.005 · (T − 32) °F)

Influence of medium pressure

The following shows how the process pressure (gauge pressure) affects the accuracy of the mass flow.

o.r. = of reading

It is possible to compensate for the effect by:
- Reading in the current pressure measured value via the current input or a digital input.
- Specifying a fixed value for the pressure in the device parameters.

Operating Instructions .

DN		[% o.r./bar]	[% o.r./psi]
[mm]	[in]		
8	3/8	no effect	
15	½	−0.002	−0.0001
25	1	no effect	
40	1½	−0.003	−0.0002
50	2	−0.008	−0.0006
80	3	−0.009	−0.0006
100	4	−0.007	−0.0005

DN		[% o.r./bar]	[% o.r./psi]
[mm]	[in]		
150	6	−0.009	−0.0006
250	10	−0.009	−0.0006

Design fundamentals

o.r. = of reading, o.f.s. = of full scale value

BaseAccu = base accuracy in % o.r., BaseRepeat = base repeatability in % o.r.

MeasValue = measured value; ZeroPoint = zero point stability

Calculation of the maximum measured error as a function of the flow rate

Flow rate	Maximum measured error in % o.r.
$\geq \frac{\text{ZeroPoint}}{\text{BaseAccu}} \cdot 100$ A0021332	$\pm$ BaseAccu A0021339
$< \frac{\text{ZeroPoint}}{\text{BaseAccu}} \cdot 100$ A0021333	$\pm \frac{\text{ZeroPoint}}{\text{MeasValue}} \cdot 100$ A0021334

Calculation of the maximum repeatability as a function of the flow rate

Flow rate	Maximum repeatability in % o.r.
$\geq \frac{½ \cdot \text{ZeroPoint}}{\text{BaseRepeat}} \cdot 100$ A0021335	$\pm$ BaseRepeat A0021340
$< \frac{½ \cdot \text{ZeroPoint}}{\text{BaseRepeat}} \cdot 100$ A0021336	$\pm ½ \cdot \frac{\text{ZeroPoint}}{\text{MeasValue}} \cdot 100$ A0021337

Example of maximum measurement error

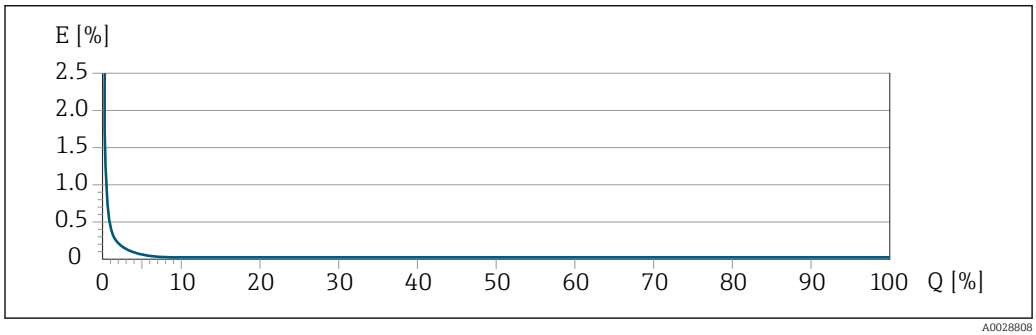

A0028808

E Maximum measurement error in % o.r. (example with PremiumCal)
Q Flow rate in % of maximum full scale value

16.7 Installation

Installation requirements

→ 21

16.8 Environment

Ambient temperature range	→ 📄 23 **Temperature tables** Observe the interdependencies between the permitted ambient and fluid temperatures when operating the device in hazardous areas. For detailed information on the temperature tables, see the separate document entitled "Safety Instructions" (XA) for the device.
Storage temperature	−50 to +80 °C (−58 to +176 °F)
Climate class	DIN EN 60068-2-38 (test Z/AD)
Relative humidity	The device is suitable for use in outdoor and indoor areas with a relative humidity of 4 to 95%.
Operating height	According to EN 61010-1 ▪ ≤ 2 000 m (6 562 ft) ▪ > 2 000 m (6 562 ft) with additional overvoltage protection (e.g. Endress+Hauser HAW Series)
Degree of protection	**Transmitter** ▪ IP66/67, Type 4X enclosure, suitable for pollution degree 4 ▪ When the housing is open: IP20, Type 1 enclosure, suitable for pollution degree 2 ▪ Display module: IP20, Type 1 enclosure, suitable for pollution degree 2 **Optional** Order code for "Sensor options", option CM "IP69 **External WLAN antenna** IP67
Vibration-resistance and shock-resistance	**Vibration sinusoidal, in accordance with IEC 60068-2-6** ▪ 2 to 8.4 Hz, 3.5 mm peak ▪ 8.4 to 2 000 Hz, 1 g peak **Vibration broad-band random, according to IEC 60068-2-64** ▪ 10 to 200 Hz, 0.003 g^2/Hz ▪ 200 to 2 000 Hz, 0.001 g^2/Hz ▪ Total: 1.54 g rms **Shock half-sine, according to IEC 60068-2-27** 6 ms 30 g **Rough handling shocks according to IEC 60068-2-31**

Internal cleaning

- CIP cleaning
- SIP cleaning

Options

- Oil- and grease-free version for wetted parts, without declaration
  Order code for "Service", option HA [3)]
- Oil- and grease-free version for wetted parts as per IEC/TR 60877-2.0 and BOC 50000810-4, with declaration
  Order code for "Service", option HB [3)]

Mechanical load

Transmitter housing:

- Protect against mechanical effects, such as shock or impact
- Do not use as a ladder or climbing aid

Electromagnetic compatibility (EMC)

Details are provided in the Declaration of Conformity.

This unit is not intended for use in residential environments and cannot guarantee adequate protection of the radio reception in such environments.

16.9 Process

Medium temperature range

Standard version	−50 to +150 °C (−58 to +302 °F)	Order code for "Measuring tube mat., wetted surface", option HA, SA, SB, SC
Extended temperature version	−50 to +240 °C (−58 to +464 °F)	Order code for "Measuring tube mat., wetted surface", option SD, SE, SF, TH
High-temperature version	−50 to +350 °C (−58 to +662 °F)	For nominal diameters DN 15 (½"), 25 (1"), 50 to 250 (2 to 10") Order code for "Measuring tube mat., wetted surface", option TS, TT, TU
Low-temperature version	−196 to +150 °C (−320 to +302 °F) NOTICE **Material fatigue due to excessive temperature difference!** ▶ Maximum temperature difference of media used: 300 K	Order code for "Measuring tube mat., wetted surface", option LA

3) The cleaning refers to the measuring instrument only. Any accessories supplied are not cleaned.

Dependency of ambient temperature on medium temperature

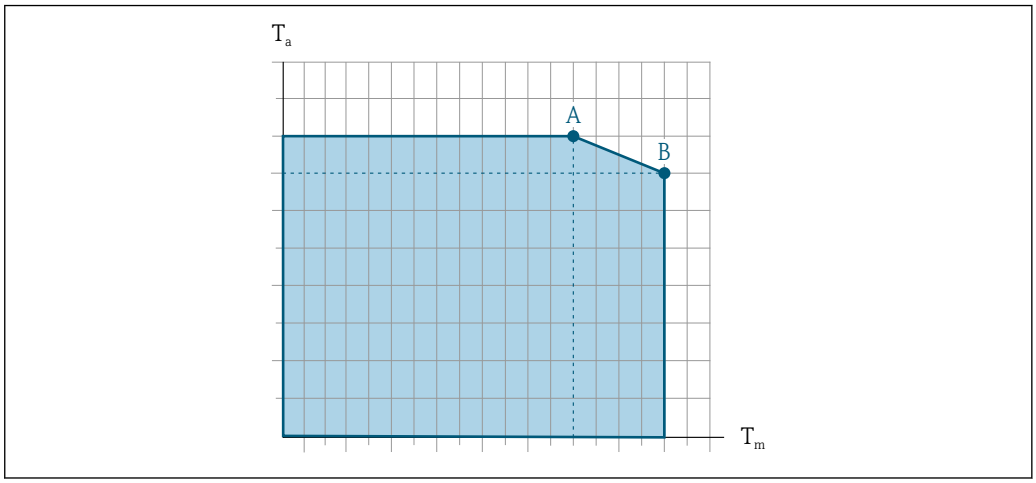

32 *Exemplary representation, values in the table below.*

T_a Ambient temperature
T_m Medium temperature
A Maximum permitted medium temperature T_m at $T_{a\,max}$ = 60 °C (140 °F); higher medium temperatures T_m require a reduction in the ambient temperature T_a
B Maximum permitted ambient temperature T_a for the maximum specified medium temperature T_m of the sensor

Values for devices that are used in the hazardous area:
Separate Ex documentation (XA) for the device → 232.

Version	Not insulated				Insulated			
	A		B		A		B	
	T_a	T_m	T_a	T_m	T_a	T_m	T_a	T_m
Standard version	60 °C (140 °F)	150 °C (302 °F)	–	–	60 °C (140 °F)	110 °C (230 °F) [1]	55 °C (131 °F)	150 °C (302 °F)
Extended temperature version	60 °C (140 °F)	160 °C (320 °F) [2]	55 °C (131 °F)	240 °C (464 °F)	60 °C (140 °F)	110 °C (230 °F)	50 °C (122 °F) [3]	240 °C (464 °F)
High-temperature version	60 °C (140 °F)	350 °C (662 °F)	–	–	60 °C (140 °F)	350 °C (662 °F)	–	–

1) If the sensor is installed in such a way that the transmitter is not mounted above the sensor and free convection can occur on all sides, the maximum permitted medium temperature is: 150 °C (302 °F)
2) If the sensor is installed in such a way that the transmitter is not mounted above the sensor and free convection can occur on all sides, the maximum permitted medium temperature is: 240 °C (464 °F)
3) If the sensor is installed in such a way that the transmitter is not mounted above the sensor and free convection can occur on all sides, the maximum permitted ambient temperature is: 55 °C (131 °F)

Medium density

0 to 5 000 kg/m³ (0 to 312 lb/cf)

Pressure-temperature ratings

For an overview of the pressure-temperature ratings for the process connections, see the Technical Information

Sensor housing

For standard versions with the temperature range −50 to +150 °C (−58 to +302 °F), the sensor housing is filled with dry nitrogen gas and protects the electronics and mechanics inside.

For all other temperature versions the sensor housing is filled with dry inert gas.

If a measuring tube fails (e.g. due to process characteristics like corrosive or abrasive fluids), the fluid will initially be contained by the sensor housing.

In the event of a tube failure, the pressure level inside the sensor housing will rise according to the operating process pressure. If the user judges that the sensor housing burst pressure does not provide an adequate safety margin, the device can be fitted with a rupture disk. This prevents excessively high pressure from forming inside the sensor housing. Therefore, the use of a rupture disk is strongly recommended in applications involving high gas pressures, and particularly in applications in which the process pressure is greater than 2/3 of the sensor housing burst pressure.

If there is a need to drain the leaking medium into a discharge device, the sensor should be fitted with a rupture disk. Connect the discharge to the additional threaded connection .

If the sensor is to be purged with gas (gas detection), it should be equipped with purge connections.

Do not open the purge connections unless the containment can be filled immediately with a dry, inert gas. Use only low pressure to purge.

Maximum pressure:
- DN 08 to 150 (3/8 to 6"): 5 bar (72.5 psi)
- DN 250 (10"):
  - Medium temperature ≤ 100 °C (212 °F): 5 bar (72.5 psi)
  - Medium temperature > 100 °C (212 °F): 3 bar (43.5 psi)

Burst pressure of the sensor housing

The following sensor housing burst pressures are only valid for standard devices and/or devices equipped with closed purge connections (not opened/as delivered).

If a device fitted with purge connections (order code for "Sensor option", option CH "Purge connection") is connected to the purge system, the maximum pressure is determined by the purge system itself or by the device, depending on which component has the lower pressure classification.

If the device is fitted with a rupture disk (order code for "Sensor option", option CA "Rupture disk"), the rupture disk trigger pressure is decisive .

The sensor housing burst pressure refers to a typical internal pressure which is reached prior to mechanical failure of the sensor housing and which was determined during type testing. The corresponding type test declaration can be ordered with the device (order code for "Additional approval", option LN "Sensor housing burst pressure, type test").

DN		Sensor housing burst pressure	
[mm]	[in]	[bar]	[psi]
8	⅜	400	5800
15	½	350	5070
25	1	280	4060
40	1½	260	3770
50	2	180	2610
80	3	120	1740
100	4	95	1370

DN		Sensor housing burst pressure	
[mm]	[in]	[bar]	[psi]
150	6	75	1080
250	10	50	720

For information on the dimensions: see the "Mechanical construction" section of the "Technical Information" document

Rupture disk

To increase the level of safety, a device version with a rupture disk with a trigger pressure of 10 to 15 bar (145 to 217.5 psi)can be used (order code for "Sensor option", option CA "rupture disk").

The use of rupture disks cannot be combined with the separately available heating jacket.

For information on the dimensions of the rupture disk: see the "Mechanical construction" section of the "Technical Information" document

Flow limit

Select the nominal diameter by optimizing between the required flow range and permissible pressure loss.

For an overview of the full scale values for the measuring range, see the "Measuring range" section → 197

- The minimum recommended full scale value is approx. 1/20 of the maximum full scale value
- For the most common applications, 20 to 50 % of the maximum full scale value can be considered ideal
- A low full scale value must be selected for abrasive media (such as liquids with entrained solids): flow velocity < 1 m/s (< 3 ft/s).
- For gas measurement the following rules apply:
  - The flow velocity in the measuring tubes should not exceed half the speed of sound (0.5 Mach)
  - The maximum mass flow depends on the density of the gas: formula

To calculate the flow limit, use the *Applicator* sizing tool → 194

Pressure loss

To calculate the pressure loss, use the *Applicator* sizing tool → 194

Promass F with reduced pressure loss: order code for "Sensor option", option CE "Reduced pressure loss"

System pressure

→ 23

16.10 Mechanical construction

Design, dimensions

For the dimensions and installed lengths of the device, see the "Technical Information" document, "Mechanical construction" section

Weight

All values (weight exclusive of packaging material) refer to devices with EN/DIN PN 40 flanges. Weight specifications including transmitter as per order code for "Housing", option A "Aluminum, coated".

Different values due to different transmitter versions:
- Transmitter version for the hazardous area
  (Order code for "Housing", option A "Aluminum, coated"; Ex d): +2 kg (+4.4 lbs)
- Cast transmitter version, stainless
  (Order code for "Housing", option L "Cast, stainless"): +6 kg (+13 lbs)
- Transmitter version for hygienic area
  (Order code for "Housing", option B "Stainless, hygienic"): +0.2 kg (+0.44 lbs)

Weight in SI units

DN [mm]	Weight [kg]
8	11
15	12
25	14
40	19
50	30
80	55
100	96
150	154
250	400

Weight in US units

DN [in]	Weight [lbs]
3/8	24
½	26
1	31
1½	42
2	66
3	121
4	212
6	340
10	882

Materials

Transmitter housing

Order code for "Housing":
- Option **A** "Aluminum, coated": aluminum, AlSi10Mg, coated
- Option **B** "Stainless, hygienic": stainless steel, 1.4404 (316L)
- Option **L** "Cast, stainless": cast, stainless steel, 1.4409 (CF3M) similar to 316L

Window material

Order code for "Housing":
- Option **A** "Aluminum, coated": glass
- Option **B** "Stainless, hygienic": polycarbonate
- Option **L** "Cast, stainless": glass

Seals

Order code for "Housing":
Option **B** "Stainless, hygienic": EPDM and silicone

Cable entries/cable glands

Order code for "Housing", option A "Aluminum, coated"

The various cable entries are suitable for hazardous and non-hazardous areas.

Cable entry/cable gland	Material
Coupling M20 × 1.5	Non-Ex: plastic
	Z2, D2, Ex d/de: brass with plastic
Adapter for cable entry with female thread G ½"	Nickel-plated brass
Adapter for cable entry with female thread NPT ½"	

Order code for "Housing", option B "Stainless, hygienic"

The various cable entries are suitable for hazardous and non-hazardous areas.

Cable entry/cable gland	Material
Cable gland M20 × 1.5	Plastic
Adapter for cable entry with female thread G ½"	Nickel-plated brass
Adapter for cable entry with female thread NPT ½"	

Order code for "Housing", option L "Cast, stainless"

The various cable entries are suitable for hazardous and non-hazardous areas.

Cable entry/cable gland	Material
Cable gland M20 × 1.5	Stainless steel, 1.4404 (316L)
Adapter for cable entry with female thread G ½"	
Adapter for cable entry with female thread NPT ½"	

Sensor housing

The material of the sensor housing depends on the option selected in the order code for "Measuring tube mat., wetted surface".

Order code for "Measuring tube mat., wetted surface"	Material
Option HA, SA, SD, TH	▪ Acid and alkali-resistant outer surface ▪ Stainless steel 1.4301 (304) With order code for "Sensor option", option **CC** "316L Sensor housing": stainless steel, 1.4404 (316L)
Option SB, SC, SE, SF	▪ Acid and alkali-resistant outer surface ▪ Stainless steel 1.4301 (304)
Option TS, TT, TU, LA	▪ Acid and alkali-resistant outer surface ▪ Stainless steel, 1.4404 (316L)

Measuring tubes

- DN 8 to 100 (3/8 to 4"): stainless steel, 1.4539 (904L);
  Manifold: stainless steel, 1.4404 (316/316L)
- DN 150 (6"), DN 250 (10"): stainless steel, 1.4404 (316/316L);
  Manifold: stainless steel, 1.4404 (316/316L)
- DN 8 to 250 (3/8 to 10"): Alloy C22, 2.4602 (UNS N06022);
  Manifold: Alloy C22, 2.4602 (UNS N06022)

High-temperature version
DN 15 (½"), 25 (1"), 50 to 250 (2 to 10"):
- DN 15 to 100 (½ to 4"): stainless steel, 1.4539 (904L)
- DN 150 (6"), 250 (10"): stainless steel, 1.4404 (316/316L)
- DN 15 to 250 (½ to 10"): Alloy C22, 2.4602 (UNS N06022)

Process connections

- Flanges according to EN 1092-1 (DIN2501) / according to ASME B 16.5 / as per JIS B2220:
  - Stainless steel, 1.4404 (F316/F316L)
  - Alloy C22, 2.4602 (UNS N06022)
  - Lap joint flanges: stainless steel, 1.4301 (F304); wetted parts Alloy C22
- All other process connections:
  Stainless steel, 1.4404 (316/316L)

High-temperature version
Flanges according to EN 1092-1 (DIN2501) / according to ASME B 16.5 / as per JIS B2220:
- DN 15 to 250 (½ to 10"): stainless steel, 1.4404 (316/316L)
- DN 15 to 250 (½ to 10"): Alloy C22, 2.4602 (UNS N06022)

Available process connections→ 221

Seals

Welded process connections without internal seals

Accessories

Protective cover

Stainless steel, 1.4404 (316L)

External WLAN antenna

- Antenna: ASA plastic (acrylonitrile styrene acrylate) and nickel-plated brass
- Adapter: Stainless steel and nickel-plated brass
- Cable: Polyethylene
- Plug: Nickel-plated brass
- Angle bracket: Stainless steel

Process connections

- Fixed flange connections:
  - EN 1092-1 (DIN 2501) flange
  - EN 1092-1 (DIN 2512N) flange
  - NAMUR lengths in accordance with NE 132
  - ASME B16.5 flange
  - JIS B2220 flange
  - DIN 11864-2 Form A flange, DIN 11866 series A, flange with notch
- Clamp connections:
  Tri-Clamp (OD tubes), DIN 11866 series C
- Threaded adapter:
  - DIN 11851 thread, DIN 11866 series A
  - SMS 1145 threaded adapter
  - ISO 2853 thread, ISO 2037
  - DIN 11864-1 Form A thread, DIN 11866 series A
- VCO connections:
  - 8-VCO-4
  - 12-VCO-4

Process connection materials → 📄 220

Surface roughness

All data refer to parts in contact with the medium.

The following surface roughness categories can be ordered:

Category	Method	Option(s) order code "Measuring tube mat., wetted surface"
Not polished	–	HA. LA, SA, SD, TH, TS, TT, TU
Ra ≤ 0.76 µm (30 µin) [1]	Mechanically polished [2]	SB, SE
Ra ≤ 0.76 µm (30 µin) [1]	Mechanically polished [2], welds in as welded condition	SJ, SL
Ra ≤ 0.38 µm (15 µin) [1]	Mechanically polished [2]	SC, SF
Ra ≤ 0.38 µm (15 µin) [1]	Mechanically polished [2], welds in as welded condition	SK, SM
Ra ≤ 0.38 µm (15 µin) [1]	Mechanical [2] and electropolished	BC
Ra ≤ 0.38 µm (15 µin) [1]	Mechanical [2] and electropolished, welds in as welded condition	BG

1) Ra according to ISO 21920
2) Excludes inaccessible weld seams between pipe and manifold

16.11 Operability

Languages

Can be operated in the following languages:
- Via local operation
  English, German, French, Spanish, Italian, Dutch, Portuguese, Polish, Russian, Turkish, Chinese, Japanese, Korean, Vietnamese, Czech, Swedish
- Via web browser
  English, German, French, Spanish, Italian, Dutch, Portuguese, Polish, Russian, Turkish, Chinese, Japanese, Vietnamese, Czech, Swedish
- Via "FieldCare", "DeviceCare" operating tool: English, German, French, Spanish, Italian, Chinese, Japanese

Onsite operation

Via display module

Equipment level:
- Order code for "Display; operation", option F "4-line, illuminated, graphic display; touch control"
- Order code for "Display; operation", option G "4-line, illuminated, graphic display; touch control + WLAN"

Information about WLAN interface → 69

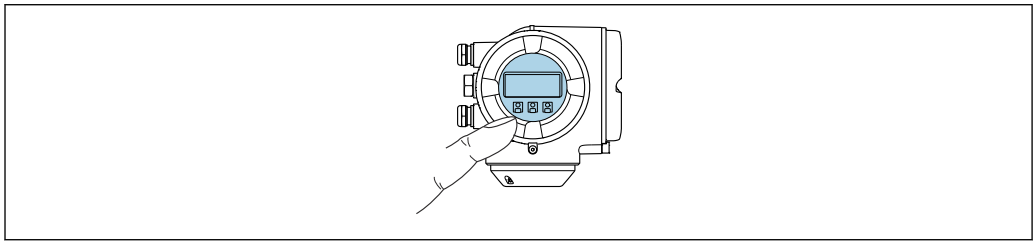

A0026785

33 *Operation with touch control*

Display elements

- 4-line, illuminated, graphic display
- White background lighting; switches to red in event of device errors
- Format for displaying measured variables and status variables can be individually configured

Operating elements

- External operation via touch control (3 optical keys) without opening the housing: ⊞, ⊟, E
- Operating elements also accessible in the various zones of the hazardous area

Via remote display and operating module DKX001

The remote display and operating module DKX001 is available as an optional extra → 193..

- The remote display and operating module DKX001 is only available for the following housing versions, order code for "Housing":
  - Option A "Aluminum, coated"
  - Option L "Cast, stainless"
- The measuring instrument is always supplied with a dummy cover when the remote display and operating module DKX001 is ordered directly with the measuring instrument. Display or operation at the transmitter is not possible in this case.
- If ordered subsequently, the remote display and operating module DKX001 may not be connected at the same time as the existing measuring instrument display module. Only one display or operation unit may be connected to the transmitter at any one time.

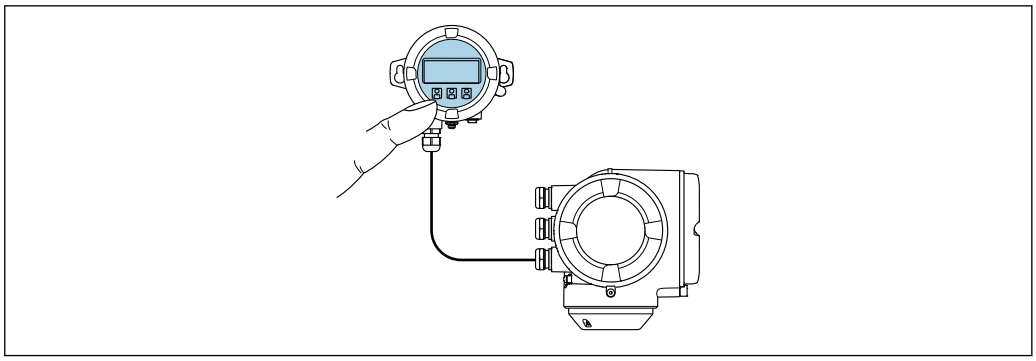

A0026786

34 *Operation via remote display and operating module DKX001*

Display and operating elements

The display and operating elements correspond to those of the display module → 222.

Housing material

The housing material of the display and operating module DKX001 depends on the choice of transmitter housing material.

Transmitter housing		Remote display and operating module
Order code for "Housing"	**Material**	**Material**
Option **A** "Aluminum, coated"	AlSi10Mg, coated	AlSi10Mg, coated
Option **L** "Cast, stainless"	Cast stainless steel, 1.4409 (CF3M) similar to 316L	1.4409 (CF3M)

Cable entry

Corresponds to the choice of transmitter housing, order code for "Electrical connection".

Connecting cable

→ 33

Dimensions

Information on the dimensions:
"Mechanical construction" section of the "Technical Information" document.

Remote operation → 67

Service interface → 69

Supported operating tools

Different operating tools can be used for local or remote access to the measuring device. Depending on the operating tool used, access is possible with different operating units and via a variety of interfaces.

Supported operating tools	Operating unit	Interface	Additional information
Web browser	Notebook, PC or tablet with web browser	▪ Service interface CDI-RJ45 ▪ WLAN interface ▪ Ethernet-based fieldbus (Ethernet/IP, PROFINET, Modbus TCP over Ethernet-APL)	Special Documentation for device → 🗎 233
DeviceCare SFE100	Notebook, PC or tablet with Microsoft Windows system	▪ Service interface CDI-RJ45 ▪ WLAN interface ▪ Fieldbus protocol ▪ Modbus TCP over Ethernet-APL	→ 🗎 194
FieldCare SFE500	Notebook, PC or tablet with Microsoft Windows system	▪ Service interface CDI-RJ45 ▪ WLAN interface ▪ Fieldbus protocol	→ 🗎 194
Field Xpert	SMT70/77/50	▪ All fieldbus protocols ▪ WLAN interface ▪ Bluetooth ▪ Service interface CDI-RJ45	Operating Instructions BA01202S Device description files: Use update function of handheld terminal

Other operating tools based on FDT technology with a device driver such as DTM/iDTM or DD/EDD can be used for device operation. These operating tools are available from the individual manufacturers. Integration into the following operating tools, among others, is supported:

- Emersons TREX → www.emerson.com
- Field Device Manager (FDM) from Honeywell → www.process.honeywell.com
- FieldMate from Yokogawa → www.yokogawa.com
- PACTWare → www.pactware.com

The related device description files are available: www.endress.com → Download Area

Web server

The integrated web server can be used to operate and configure the device via a web browser via Ethernet-APL, service interface (CDI) or via WLAN interface . The structure of the operating menu is the same as for the local display. In addition to the measured values, status information on the device is displayed and can be used to monitor device health. Furthermore the device data can be managed and the network parameters can be configured.

A device that has a WLAN interface (can be ordered as an option) is required for the WLAN connection: order code for "Display; Operation", option G "4-line, illuminated; touch control + WLAN". The device acts as an Access Point and enables communication by computer or a mobile handheld terminal.

Supported functions
Data exchange between the operating unit (such as a notebook, for example,) and measuring instrument:
- Upload the configuration from the measuring instrument (XML format, configuration backup)
- Save the configuration to the measuring instrument (XML format, restore configuration)
- Export event list (.csv file)
- Export parameter settings (.csv file or PDF file, document the measuring point configuration)

- Export the Heartbeat Technology verification report (PDF file, only available with the **Heartbeat Verification** → 230 application package)
- Flash firmware version for device firmware upgrade, for example
- Download driver for system integration
- Visualize up to 1000 saved measured values (only available with the **Extended HistoROM** application package→ 230)

HistoROM data management

The measuring instrument features HistoROM data management. HistoROM data management comprises both the storage and import/export of key device and process data, making operation and servicing far more reliable, secure and efficient.

When the device is delivered, the factory settings of the configuration data are stored as a backup in the device memory. This memory can be overwritten with an updated data record, for example after commissioning.

Additional information on the data storage concept

There are different types of data storage units in which device data are stored and used by the device:

	HistoROM backup	T-DAT	S-DAT
Available data	▪ Event logbook, e.g. diagnostic events ▪ Parameter data record backup ▪ Device firmware package	▪ Measured value logging ("Extended HistoROM" order option) ▪ Current parameter data record (used by firmware at run time) ▪ Indicator (minimum/maximum values) ▪ Totalizer value	▪ Sensor data: e.g. nominal diameter ▪ Serial number ▪ Calibration data ▪ Device configuration (e.g. SW options, fixed I/O or multi I/O)
Storage location	Fixed on the user interface PC board in the connection compartment	Can be plugged into the user interface PC board in the connection compartment	In the sensor plug in the transmitter neck part

Data backup

Automatic

- The most important device data (sensor and transmitter) are automatically saved in the DAT modules
- If the transmitter or measuring device is replaced: once the T-DAT containing the previous device data has been exchanged, the new measuring device is ready for operation again immediately without any errors
- If exchanging the electronics module (e.g. I/O electronics module): Once the electronics module has been replaced, the software of the module is compared against the current device firmware. The module software is upgraded or downgraded where necessary. The electronics module is available for use immediately afterwards and no compatibility problems occur.

Manual

Additional parameter data record (complete parameter settings) in the integrated device memory HistoROM backup for:

- Data backup function
  Backup and subsequent restoration of a device configuration in the device memory HistoROM backup
- Data comparison function
  Comparison of the current device configuration with the device configuration saved in the device memory HistoROM backup

Data transmission

Manual

Transfer of a device configuration to another device using the export function of the specific operating tool, e.g. with FieldCare, DeviceCare or web server: to duplicate the configuration or to store in an archive (e.g. for backup purposes)

Event list

Automatic
- Chronological display of up to 20 event messages in the events list
- If the **Extended HistoROM** application package (order option) is enabled: up to 100 event messages are displayed in the events list along with a time stamp, plain text description and remedial measures
- The events list can be exported and displayed via a variety of interfaces and operating tools e.g. DeviceCare, FieldCare or Web server

Data logging

Manual
If the **Extended HistoROM** application package (order option) is enabled:
- Recording of 1 to 4 channels of up to 1 000 measured values (up to 250 measured values per channel)
- User configurable recording interval
- Export the measured value log via a variety of interfaces and operating tools e.g. FieldCare, DeviceCare or web server

16.12 Certificates and approvals

Current certificates and approvals for the product are available at www.endress.com on the relevant product page:

1. Select the product using the filters and search field.
2. Open the product page.
3. Select **Downloads**.

CE mark	The device meets the legal requirements of the applicable EU Directives. These are listed in the corresponding EU Declaration of Conformity along with the standards applied. Endress+Hauser confirms successful testing of the device by affixing to it the CE mark.
UKCA marking	The device meets the legal requirements of the applicable UK regulations (Statutory Instruments). These are listed in the UKCA Declaration of Conformity along with the designated standards. By selecting the order option for UKCA marking, Endress+Hauser confirms a successful evaluation and testing of the device by affixing the UKCA mark. Contact address Endress+Hauser UK: Endress+Hauser Ltd. Floats Road Manchester M23 9NF United Kingdom www.uk.endress.com

Hygienic compatibility	▪ 3-A approval
	  ▪ Only measuring instruments with the order code for "Additional approval", option LP "3A" have 3-A approval.
	  ▪ The 3-A approval refers to the measuring instrument.
	  ▪ When installing the measuring instrument, ensure that no liquid can accumulate on the outside of the measuring instrument.
	  A remote display module must be installed in accordance with the 3-A Standard.
	  ▪ Accessories (e.g. heating jacket, weather protection cover, wall holder unit) must be installed in accordance with the 3-A Standard.
	  Each accessory can be cleaned. Disassembly may be necessary under certain circumstances.
	▪ EHEDG-tested (Type EL Class I)
	Only devices with the order code for "Additional approval", option LT "EHEDG" have been tested and meet the requirements of the EHEDG.
	To meet the requirements for EHEDG certification, the device must be used with process connections in accordance with the EHEDG position paper entitled "Easy cleanable Pipe couplings and Process connections" (www.ehedg.org).
	To meet the requirements for EHEDG certification, the orientation of the device must ensure drainability.
	Test criteria for cleanability according to EHEDG is a flow velocity of 1.5 m/s in the process line. This speed must be ensured for EHEDG-compliant cleaning.
	▪ FDA CFR 21
	▪ Food Contact Materials Regulation (EC) 1935/2004
	▪ Food Contact Materials Regulation GB 4806
	▪ The requirements of the Food Contact Material regulations must be observed when selecting the material versions.
	Observe special installation instructions → 25

Pharmaceutical compatibility	▪ FDA 21 CFR 177 ▪ USP <87> ▪ USP <88> Class VI 121 °C ▪ TSE/BSE Certificate of Suitability ▪ cGMP Devices with the order code for "Test, certificate", option JG "Conformity with cGMP-derived requirements, declaration" comply with the requirements of cGMP with regard to the surfaces of parts in contact with the medium, design, FDA 21 CFR material conformity, USP Class VI tests and TSE/BSE conformity. A serial number-specific declaration is generated.
Pressure Equipment Directive	▪ With the marking a) PED/G1/x (x = category) or b) PESR/G1/x (x = category) on the sensor nameplate, Endress+Hauser confirms compliance with the "Essential Safety Requirements" a) specified in Annex I of the Pressure Equipment Directive 2014/68/EU or b) Schedule 2 of Statutory Instruments 2016 No. 1105. ▪ Devices not bearing this marking (without PED or PESR) are designed and manufactured according to sound engineering practice. They meet the requirements of a) Art. 4 Para. 3 of the Pressure Equipment Directive 2014/68/EU or b) Part 1, Para. 8 of Statutory Instruments 2016 No. 1105. The scope of application is indicated a) in diagrams 6 to 9 in Annex II of the Pressure Equipment Directive 2014/68/EU or b) Schedule 3, Para. 2 of Statutory Instruments 2016 No. 1105.

Radio approval

The measuring instrument has radio approval.

For detailed information on the radio approval, see the Special Documentation → 233

Additional certification

CRN approval

Some device versions have CRN approval. A CRN-approved process connection with a CSA approval must be ordered for a CRN-approved device.

Tests and certificates

- ISO 23277 ZG2x (PT) + ISO 10675-1 ZG1 (RT) measuring tube (PT) + process connection (RT) welded seam, test report
- Penetrant+Radiographic testing ASME B31.3 NFS (RT) measuring tube (PT) + process connection (RT) welded seam, test report
- Penetrant+Radiographic testing ASME VIII Div.1(RT) measuring tube (PT) + process connection (RT) welded seam, test report
- Visual+Penetrant+Radiographic testing NORSOK M-601 (RT) measuring tube (VT+PT) + process connection. (VT + RT) welded seam, test report
- ISO 23277 ZG2x (PT) + ISO 10675-1 ZG1 (DR) measuring tube (PT) + process connection (DR) welded seam, test report
- Penetrant+Radiographic testing ASME B31.3 NFS (DR) measuring tube (PT) + process connection (DR) welded seam, test report
- Penetrant+Radiographic testing ASME VIII Div.1 (DR) measuring tube (PT) + process connection (DR) welded seam, test report
- Visual+Penetrant+Radiographic testing NORSOK M-601 (DR) measuring tube (VT+PT) + process conn. (VT+DR) welded seam, test report

- EN10204-3.1 material certificate, wetted parts
- Pressure test, internal process, test report (order code for "Test, certificate", option JB)
- Surface roughness test ISO4287/Ra, (wetted parts), test report (option JE)
- Material identification check (PMI), internal procedure, wetted parts, test report (option JK)
- Compliance with requirements derived from cGMP, Declaration (option JG)

Testing of welded connections

Option	Test standard				Component	
	ISO 23277 AL2x (PT) ISO 10675-1 AL1 (RT, DR)	ASME B31.3 NFS	ASME VIII Div.1 Appx. 4+8	NORSOK M-601	Measuring tube	Process connection
KF	x				PT	RT
KK		x			PT	RT
KP			x		PT	RT
KR				x	VT, PT	VT, RT
K1	x				PT	DR
K2		x			PT	DR
K3			x		PT	DR
K4				x	VT, PT	VT, DR
PT = penetrant testing, RT = radiographic testing, VT = visual testing, DR = digital radiography All options with test report						

External standards and guidelines

- EN 60529
  Degrees of protection provided by enclosures (IP code)
- IEC/EN 60068-2-6
  Environmental influences: Test procedure - Test Fc: vibrate (sinusoidal).
- IEC/EN 60068-2-31
  Environmental influences: Test procedure - Test Ec: shocks due to rough handling, primarily for devices.
- EN 61010-1
  Safety requirements for electrical equipment for measurement, control and laboratory use - general requirements
- GB30439.5
  Safety requirements for industrial automation products - part 5: Flowmeter safety requirements
- EN 61326-1/-2-3
  EMC requirements for electrical equipment for measurement, control and laboratory use
- NAMUR NE 21
  Electromagnetic compatibility (EMC) of industrial process and laboratory control equipment
- NAMUR NE 32
  Data retention in the event of a power failure in field and control instruments with microprocessors
- NAMUR NE 43
  Standardization of the signal level for the breakdown information of digital transmitters with analog output signal.
- NAMUR NE 53
  Software of field devices and signal-processing devices with digital electronics
- NAMUR NE 80
  The application of the pressure equipment directive to process control devices
- NAMUR NE 105
  Specifications for integrating fieldbus devices in engineering tools for field devices
- NAMUR NE 107
  Self-monitoring and diagnostics of field devices
- NAMUR NE 131
  Requirements for field devices for standard applications
- NAMUR NE 132
  Coriolis mass meter
- NACE MR0103
  Materials resistant to sulfide stress cracking in corrosive petroleum refining environments.
- NACE MR0175/ISO 15156-1
  Materials for use in H2S-containing Environments in Oil and Gas Production.
- ETSI EN 300 328
  Guidelines for 2.4 GHz radio components.
- EN 301489
  Electromagnetic compatibility and radio spectrum matters (ERM).

16.13 Application packages

Many different application packages are available to enhance the functionality of the device. Such packages might be needed to address safety aspects or specific application requirements.

The application packages can be ordered with the device or subsequently from Endress+Hauser. Detailed information on the order code in question is available from your local Endress+Hauser sales center or on the product page of the Endress+Hauser website: www.endress.com.

Detailed information on the application packages:
Special Documentation → 📄 232

Diagnostic functionality	Order code for "Application package", option EA "Extended HistoROM" Comprises extended functions concerning the event log and the activation of the measured value memory. Event log: Memory volume is extended from 20 message entries (standard version) to up to 100 entries. Data logging (line recorder): ▪ Memory capacity for up to 1000 measured values is activated. ▪ 250 measured values can be output via each of the 4 memory channels. The recording interval can be defined and configured by the user. ▪ Measured value logs can be accessed via the local display or operating tool e.g. FieldCare, DeviceCare or Web server. For detailed information, see the Operating Instructions for the device.
Heartbeat Technology	Order code for "Application package", option EB "Heartbeat Verification + Monitoring" **Heartbeat Verification** Meets the requirement for traceable verification in accordance with DIN ISO 9001:2015 Clause 7.6 a) "Control of monitoring and measuring equipment" ▪ Functional testing in the installed state without interrupting the process. ▪ Traceable verification results on request, including a report. ▪ Simple testing process via local operation or other operating interfaces. ▪ Clear measuring point assessment (pass/fail) with high total test coverage within the framework of manufacturer specifications. ▪ Extension of calibration intervals according to operator's risk evaluation. **Heartbeat Monitoring** Continuously supplies data, which are characteristic of the measuring principle, to an external condition monitoring system for the purpose of preventive maintenance or process analysis. These data enable the operator to: ▪ Draw conclusions - using these data and other information - about the impact the process influences (e.g. corrosion, abrasion, deposit buildup etc.) have on measuring performance over time. ▪ Schedule servicing in time. ▪ Monitor the process or product quality, e.g. gas pockets. Detailed information on Heartbeat Technology: Special Documentation → 232
Concentration measurement	Order code for "Application package", option ED "Concentration" Calculation and outputting of fluid concentrations. The measured density is converted to the concentration of a substance of a binary mixture using the "Concentration" application package: ▪ Choice of predefined fluids (e.g. various sugar solutions, acids, alkalis, salts, ethanol etc.). ▪ Common or user-defined units (°Brix, °Plato, % mass, % volume, mol/l etc.) for standard applications. ▪ Concentration calculation from user-defined tables. For detailed information, see the Special Documentation for the device.
Special density	Order code for "Application package", option EE "Special density"

Many applications use density as a key measured value for monitoring quality or controlling processes. The device measures the density of the fluid as standard and makes this value available to the control system.

The "Special Density" application package offers high-precision density measurement over a wide density and temperature range particularly for applications subject to varying process conditions.

The following information can be found in the calibration certificate supplied:

- Density performance in air
- Density performance in liquids with different density
- Density performance in water with different temperatures

For detailed information, see the Operating Instructions for the device.

Extended density

Order code for "Application package", option E1 "Extended density"

For volume-based applications, the device can calculate and output a volume flow rate by dividing the mass flow rate by the measured density.

This application package is the standard calibration for custody transfer applications according to national and international standards (e.g. OIML, MID). It is recommended for volume-based fiscal dosing applications over a wide temperature range.

The calibration certificate supplied describes the density performance in air and water at various temperatures in detail.

For detailed information, see the Operating Instructions for the device.

Petroleum

Order code for "Application package", option EJ "Petroleum"

The most important parameters for the Oil & Gas Industry can be calculated and displayed with this application package.

- Corrected volume flow and calculated reference density in accordance with the "API Manual of Petroleum Measurement Standards, Chapter 11.1"
- Water content, based on density measurement
- Weighted mean of the density and temperature

For detailed information, see the Special Documentation for the device.

Petroleum & locking function

Order code for "Application package", option EM "Petroleum & locking function"

The most important parameters for the Oil & Gas Industry can be calculated and displayed with this application package. It is also possible to lock the settings.

- Corrected volume flow and calculated reference density in accordance with the "API Manual of Petroleum Measurement Standards, Chapter 11.1"
- Water content, based on density measurement
- Weighted mean of the density and temperature

For detailed information, see the Special Documentation for the device.

16.14 Accessories

Overview of accessories available to order → 193

16.15 Documentation

For an overview of the scope of the associated Technical Documentation, refer to the following:
- *Device Viewer* (www.endress.com/deviceviewer): Enter the serial number from the nameplate
- *Endress+Hauser Operations app*: Enter serial number from nameplate or scan matrix code on nameplate.

Standard documentation

Brief Operating Instructions

Brief Operating Instructions for the sensor

Measuring instrument	Documentation code
Proline Promass F	KA01261D

Brief operating instructions for transmitter

Measuring instrument	Documentation code
Proline 300	KA01733D

Technical Information

Measuring device	Documentation code
Promass F 300	TI01221D

Description of Device Parameters

Measuring instrument	Documentation code
Promass 300	GP01235D

Supplementary device-dependent documentation

Safety Instructions

Safety instructions for electrical equipment for hazardous areas.

Contents	Documentation code
ATEX/IECEx Ex d	XA01405D
ATEX/IECEx Ex ec	XA01439D
cCSAus XP	XA01373D
cCSAus Ex d	XA01372D
cCSAus Ex ec	XA01507D
EAC Ex d	XA01656D
EAC Ex ec	XA01657D
JPN Ex d	XA01778D
KCs Ex d	XA03285D
INMETRO Ex d	XA01468D
INMETRO Ex ec	XA01470D
NEPSI Ex d	XA01469D
NEPSI Ex ec	XA01471D

Contents	Documentation code
UKEX Ex d	XA02566D
UKEX Ex ec	XA02568D

Remote display and operating module DKX001

Contents	Documentation code
ATEX/IECEx Ex i	XA01494D
ATEX/IECEx Ex ec	XA01498D
cCSAus IS	XA01499D
cCSAus Ex nA	XA01513D
EAC Ex i	XA01664D
EAC Ex ec	XA01665D
INMETRO Ex i	XA01500D
INMETRO Ex ec	XA01501D
JPN	XA01781D
KCs Ex i	XA03280D
NEPSI Ex i	XA01502D
NEPSI Ex nA	XA01503D
UKCA Ex i	XA01494D
UKCA Ex ec	XA01498D

Special Documentation

Contents	Documentation code
Information on the Pressure Equipment Directive	SD01614D
Remote display and operating module DKX001	SD01763D
Radio approvals for WLAN interface for A309/A310 display module	SD01793D
Web server	-
Heartbeat Technology	SD03350D
Concentration measurement	SD03354D
Petroleum	SD03358D
Gas fraction handler	SD02584D
Modbus TCP system integration	SD03408D

Installation Instructions

Contents	Note
Installation instructions for spare part sets and accessories	▪ Access the overview of all the available spare part sets via *Device Viewer* → 🗎 191 ▪ Accessories available for order with Installation Instructions → 🗎 193

Index

0 ... 9

3-A approval . . . 227

A

Access authorization to parameters
- Read access . . . 59
- Write access . . . 59

Access code . . . 59
- Incorrect input . . . 59

Adapting the diagnostic behavior . . . 177
Additional certification . . . 228
Ambient conditions
- Mechanical load . . . 214
- Operating height . . . 213
- Relative humidity . . . 213
- Storage temperature . . . 213
- Vibration resistance and shock resistance . . . 213

Ambient temperature
- Influence . . . 210

Ambient temperature range . . . 213
Application . . . 196
Application packages . . . 229
Applicator . . . 197
Approvals . . . 226

C

Cable entries
- Technical data . . . 207

Cable entry
- Degree of protection . . . 44

CE mark . . . 10, 226
Certificates . . . 226
cGMP . . . 227
Check
- Connection . . . 45
- Received goods . . . 15

Checklist
- Post-connection check . . . 45
- Post-installation check . . . 31

CIP cleaning . . . 214
Cleaning
- CIP cleaning . . . 190
- Exterior cleaning . . . 190
- Internal cleaning . . . 190
- SIP cleaning . . . 190

Climate class . . . 213
Commissioning . . . 74
- Advanced settings . . . 111
- Configuring the device . . . 74

Configuring error response mode, Modbus RS485 . . . 177
Connecting cable . . . 32, 33
Connecting the device . . . 37
Connecting the signal cables . . . 37
Connecting the supply voltage cables . . . 37
Connection
- see Electrical connection

Connection preparations . . . 36
Connection tools . . . 32
Context menu
- Calling up . . . 55
- Closing . . . 55
- Explanation . . . 55

Current consumption . . . 206

D

Declaration of Conformity . . . 10
Defining the access code . . . 143, 144
Degree of protection . . . 44, 213
Density adjustment . . . 114
Design fundamentals
- Measurement error . . . 212
- Repeatability . . . 212

Device
- Configuring . . . 74

Device components . . . 14
Device description files . . . 73
Device locking, status . . . 146
Device name
- Sensor . . . 17
- Transmitter . . . 16

Device repair . . . 191
Device revision . . . 73
Device type ID . . . 73
Device Viewer . . . 191
DeviceCare . . . 72
- Device description file . . . 73

Diagnostic behavior
- Explanation . . . 173
- Symbols . . . 173

Diagnostic information
- Communication interface . . . 176
- Design, description . . . 173, 176
- DeviceCare . . . 175
- FieldCare . . . 175
- LED . . . 171
- Local display . . . 172
- Overview . . . 177
- Remedial actions . . . 177
- Web browser . . . 174

Diagnostic list . . . 183
Diagnostic message . . . 172
Diagnostics
- Symbols . . . 172

DIP switch
- see Write protection switch

Direct access . . . 57
Disabling write protection . . . 143
Display
- Current diagnostic event . . . 182
- Previous diagnostic event . . . 182
- see Local display

Display and operating module DKX001 . . . 222

Display area
For operational display 50
In the navigation view 51
Display values
For locking status 146
Displaying the measured value history 162
Disposal 192
Document
Function 6
Symbols 6
Document function 6
Documentation 232
Down pipe 21

E
Editing view 53
Input screen 54
Using operating elements 53, 54
EHEDG-tested 227
Electrical connection
Computer with web browser 67, 68
Degree of protection 44
Measuring instrument 32
Operating tool (e.g. FieldCare, DeviceCare, AMS Device Manager, SIMATIC PDM) 67, 68
Operating tools
Via Modbus TCP over Ethernet-APL protocol 67, 68
Via service interface (CDI-RJ45) 69
Via WLAN interface 69
Web server 69
WLAN interface 69
Electromagnetic compatibility 214
Electronics module 14
Enabling write protection 143
Enabling/disabling the keypad lock 60
Endress+Hauser services
Maintenance 190
Repair 191
Error messages
see Diagnostic messages
Event list 184
Event logbook 184
Extended order code
Sensor 17
Transmitter 16
Exterior cleaning 190

F
FDA 227
Field of application
Residual risks 10
FieldCare 71
Device description file 73
Establishing a connection 71
Function 71
User interface 72
Filtering the event logbook 185
Firmware
Release date 73
Version 73
Firmware history 189
Flow direction 22, 28
Flow limit 217
Food Contact Materials Regulation 227
Functions
see Parameters

G
Galvanic isolation 204
Gas Fraction Handler 166

H
Hardware write protection 145
Help text
Calling up 58
Closing 58
Explanation 58
HistoROM 135
Hygienic compatibility 227

I
Identifying the measuring instrument 15
Incoming acceptance 15
Influence
Ambient temperature 210
Medium pressure 211
Medium temperature 210
Information about this document 6
Inlet runs 23
Input variables 197
Inspection
Installation 31
Installation 21
Installation dimensions 23
Installation location 21
Installation requirements
Down pipe 21
Inlet and outlet runs 23
Installation dimensions 23
Installation location 21
Orientation 22
Rupture disk 25
Sensor heating 25
Vibrations 25
Intended use 9
Internal cleaning 190, 214

L
Languages, operation options 221
Line recorder 162
Local display 222
Navigation view 51
see Diagnostic message
see In alarm condition
see Operational display
Text editor 53
Low flow cut off 204

M

Main electronics module 14
Maintenance work 190
Managing the device configuration 135
Manufacturer ID 73
Manufacturing date 16, 17
Materials 218
Maximum measurement error 207
Measured variables
  see Process variables
Measurement accuracy 207
Measuring and test equipment 190
Measuring device
  Conversion 191
  Disposal 192
  Removing 192
  Repairs 191
  Structure 14
  Switching on 74
Measuring instrument
  Installing the sensor 28
  Integrating via communication protocol 73
  Preparing for electrical connection 36
  Preparing for mounting 28
Measuring principle 196
Measuring range
  For gases 197
  For liquids 197
Measuring range, recommended 217
Measuring system 196
Mechanical load 214
Medium density 215
Medium pressure
  Influence 211
Medium temperature
  Influence 210
Menu
  Diagnostics 182
  Setup 74
Menus
  For device configuration 74
  For specific settings 111
Modbus RS485
  Configuring error response mode 177
  Diagnostic information 176
Mounting dimensions
  see Installation dimensions
Mounting preparations 28
Mounting requirements
  Static pressure 23
  Thermal insulation 24
Mounting tool 28

N

Nameplate
  Sensor 17
  Transmitter 16
Navigation path (navigation view) 51
Navigation view
  In the submenu 51
  In the wizard 51
Netilion 190
Numeric editor 53

O

Onsite display
  Numeric editor 53
Operable flow range 197
Operating elements 55, 173
Operating height 213
Operating keys
  see Operating elements
Operating menu
  Menus, submenus 47
  Structure 47
  Submenus and user roles 48
Operating philosophy 48
Operation 146
Operation options 46
Operational display 49
Operational safety 10
Order code 16, 17
Orientation (vertical, horizontal) 22
Outlet runs 23
Output signal 199
Output variables 199

P

Packaging disposal 20
Parameter
  Changing 58
  Entering values or text 58
Parameter settings
  Administration (Submenu) 138
  Advanced setup (Submenu) 111
  APL port (Submenu) 77
  Communication (Submenu) 76
  Configuration backup (Submenu) 135
  Corrected volume flow calculation (Submenu) . . . 112
  Current input 85
  Current input 1 to n (Submenu) 157
  Current input 1 to n (Wizard) 85
  Current output 87
  Current output (Wizard) 87
  Custody transfer activation (Wizard) 123
  Custody transfer deactivation (Wizard) 121
  Data logging (Submenu) 162
  Define access code (Wizard) 137
  Density adjustment (Wizard) 114
  Device information (Submenu) 187
  Diagnostic event simulation (Submenu) 143
  Diagnostics (Menu) 182
  Display (Submenu) 125
  Display (Wizard) 103
  Double pulse output 102
  Double pulse output (Submenu) 160
  Double pulse output (Wizard) 102

Heartbeat base settings (Submenu) 133
Heartbeat Monitoring (Submenu) 134
Heartbeat Verification (Submenu) 134
I/O configuration 84
I/O configuration (Submenu) 84
Input simulation (Submenu) 140
Low flow cutoff (Wizard) 108
Measured variables (Submenu) 147
Measurement mode (Submenu) 166
Medium index (Submenu) 168
Medium selection (Submenu) 82
Network diagnostics (Submenu) 79
Output simulation (Submenu) 141
Partially filled pipe detection (Wizard) 110
Process value simulation (Submenu) 139
Pulse/frequency/switch output 1 to n (Submenu) 159
Pulse/frequency/switch output 1 to n (Wizard) . . . 92
Relay output 99
Relay output 1 to n (Submenu) 160
Relay output 1 to n (Wizard) 99
Reset access code (Submenu) 137
Sensor adjustment (Submenu) 113
Service interface (Submenu) 78
Setup (Menu) 74
Simulation (Submenu) 138
Status input 86
Status input 1 to n (Submenu) 158
Status input 1 to n (Wizard) 86
System units (Submenu) 79
Totalizer (Submenu) 161
Totalizer 1 to n (Submenu) 119
Totalizer handling (Submenu) 161
Value current output 1 to n (Submenu) 159
Web server (Submenu) 66
WLAN settings (Wizard) 130
Zero adjustment (Wizard) 118
Zero verification (Wizard) 117
Performance characteristics 207
Performing density adjustment 114
Pharmaceutical compatibility 227
Post-connection check 74
Post-connection check (checklist) 45
Post-installation check (checklist) 31
Post-mounting check 74
Potential equalization 40
Power consumption 206
Power supply failure 206
Pressure Equipment Directive 227
Pressure loss 217
Pressure-temperature ratings 215
Process connections 221
Process variables
Calculated 197
Measured 197
Product safety 10
Protecting parameter settings 143

R

Radio approval 228
Read access 59
Reading out diagnostic information, Modbus RS485 176
Reading the measured values 146
Recalibration 190
Reference operating conditions 207
Registered trademarks 8
Remedial actions
Calling up 174
Closing 174
Remote operation 223
Repair 191
Notes 191
Repair of a device 191
Repeatability 210
Replacement
Device components 191
Requirements for personnel 9
Response time 210
Return 191
Rupture disk
Safety instructions 25
Triggering pressure 217

S

Safety 9
Sensor
Installing 28
Sensor heating 25
Sensor housing 215
Serial number 16, 17
Setting the operating language 74
Settings
Adapting the measuring device to the process conditions 161
Administration 136
Advanced display configurations 125
Communication interface 76
Current input 85
Current output 87
Double pulse output 102
I/O configuration 84
Local display 103
Low flow cut off 108
Managing the device configuration 135
Medium 82
Operating language 74
Partially filled pipe detection 110
Relay output 99
Resetting the device 186
Resetting the totalizer 161
Sensor adjustment 113
Simulation 138
Status input 86
System units 79
Totalizer 119
Totalizer reset 161
WLAN 130
Signal on alarm 202
SIP cleaning 214

Software release . . . 73
Spare part . . . 191
Spare parts . . . 191
Special connection instructions . . . 41
Special mounting instructions
  Hygienic compatibility . . . 25
Standards and guidelines . . . 229
Static pressure . . . 23
Status area
  For operational display . . . 49
  In the navigation view . . . 51
Status signals . . . 172, 175
Storage concept . . . 225
Storage conditions . . . 19
Storage temperature . . . 19
Storage temperature range . . . 213
Structure
  Measuring device . . . 14
  Operating menu . . . 47
Submenu
  Administration . . . 136, 138
  Advanced setup . . . 111
  APL port . . . 77
  Calculated values . . . 112
  Communication . . . 76
  Concentration . . . 133
  Configuration backup . . . 135
  Corrected volume flow calculation . . . 112
  Current input 1 to n . . . 157
  Data logging . . . 162
  Device information . . . 187
  Diagnostic event simulation . . . 143
  Display . . . 125
  Double pulse output . . . 160
  Event list . . . 184
  Heartbeat base settings . . . 133
  Heartbeat Monitoring . . . 134
  Heartbeat setup . . . 133
  Heartbeat Verification . . . 134
  I/O configuration . . . 84
  Input simulation . . . 140
  Input values . . . 157
  Measured values . . . 146
  Measured variables . . . 147
  Measurement mode . . . 166
  Medium index . . . 168
  Medium selection . . . 82
  Network diagnostics . . . 79
  Output simulation . . . 141
  Output values . . . 158
  Overview . . . 48
  Petroleum . . . 133
  Process value simulation . . . 139
  Process variables . . . 112
  Pulse/frequency/switch output 1 to n . . . 159
  Relay output 1 to n . . . 160
  Reset access code . . . 137
  Sensor adjustment . . . 113
  Service interface . . . 78
  Simulation . . . 138
  Status input 1 to n . . . 158
  System units . . . 79
  Totalizer . . . 161
  Totalizer 1 to n . . . 119
  Totalizer handling . . . 161
  Value current output 1 to n . . . 159
  Viscosity . . . 132
  Web server . . . 66
Supply voltage . . . 206
Surface roughness . . . 221
Switch output . . . 202
Symbols
  Controlling data entries . . . 54
  For communication . . . 49
  For diagnostic behavior . . . 49
  For locking . . . 49
  For measured variable . . . 50
  For measurement channel number . . . 50
  For menus . . . 51
  For parameters . . . 51
  For status signal . . . 49
  For submenu . . . 51
  For wizards . . . 51
  In the status area of the local display . . . 49
  Input screen . . . 54
  Operating elements . . . 53
System design
  Measuring system . . . 196
  see Measuring device design
System integration . . . 73

T

Technical data, overview . . . 196
Temperature range
  Ambient temperature for display . . . 222
  Medium temperature . . . 214
  Storage temperature . . . 19
Terminal assignment . . . 35
Terminals . . . 206
Tests and certificates . . . 228
Text editor . . . 53
Thermal insulation . . . 24
Tool
  For mounting . . . 28
  Transportation . . . 19
Tool tip
  see Help text
Tools
  Electrical connection . . . 32
Totalizer
  Assign process variable . . . 161
  Configuring . . . 119
Transmitter
  Turning the display module . . . 30
  Turning the housing . . . 29
Transporting the measuring instrument . . . 19
Troubleshooting
  General . . . 169

TSE/BSE Certificate of Suitability 227
Turning the display module 30
Turning the electronics housing
see Turning the transmitter housing
Turning the transmitter housing 29

U

UKCA marking 226
Use of measuring device
Borderline cases 9
Incorrect use 9
Use of measuring instrument
see Intended use
User roles 48
USP Class VI 227

V

Version data for the device 73
Vibration resistance and shock resistance 213
Vibrations 25

W

W@M Device Viewer 15
Weight
SI units 218
Transport (notes) 19
US units 218
Wizard
Current input 1 to n 85
Current output 87
Custody transfer activation 123
Custody transfer deactivation 121
Define access code 137
Density adjustment 114
Display 103
Double pulse output 102
Low flow cutoff 108
Partially filled pipe detection 110
Pulse/frequency/switch output 1 to n 92
Relay output 1 to n 99
Status input 1 to n 86
WLAN settings 130
Zero adjustment 118
Zero verification 117
WLAN settings 130
Workplace safety 10
Write access 59
Write protection
Via access code 143
Via write protection switch 145
Write protection switch 145

71711803

www.addresses.endress.com

Endress+Hauser

People for Process Automation