BA02339F/00/EN/03.26-00
71783288
2026-09-11

01.00.zz (Device firmware)

Operating Instructions
Liquiphant FTL62

Vibronic
PROFINET over Ethernet-APL
Level switch with highly corrosion-resistant coating for liquids

Endress+Hauser
People for Process Automation

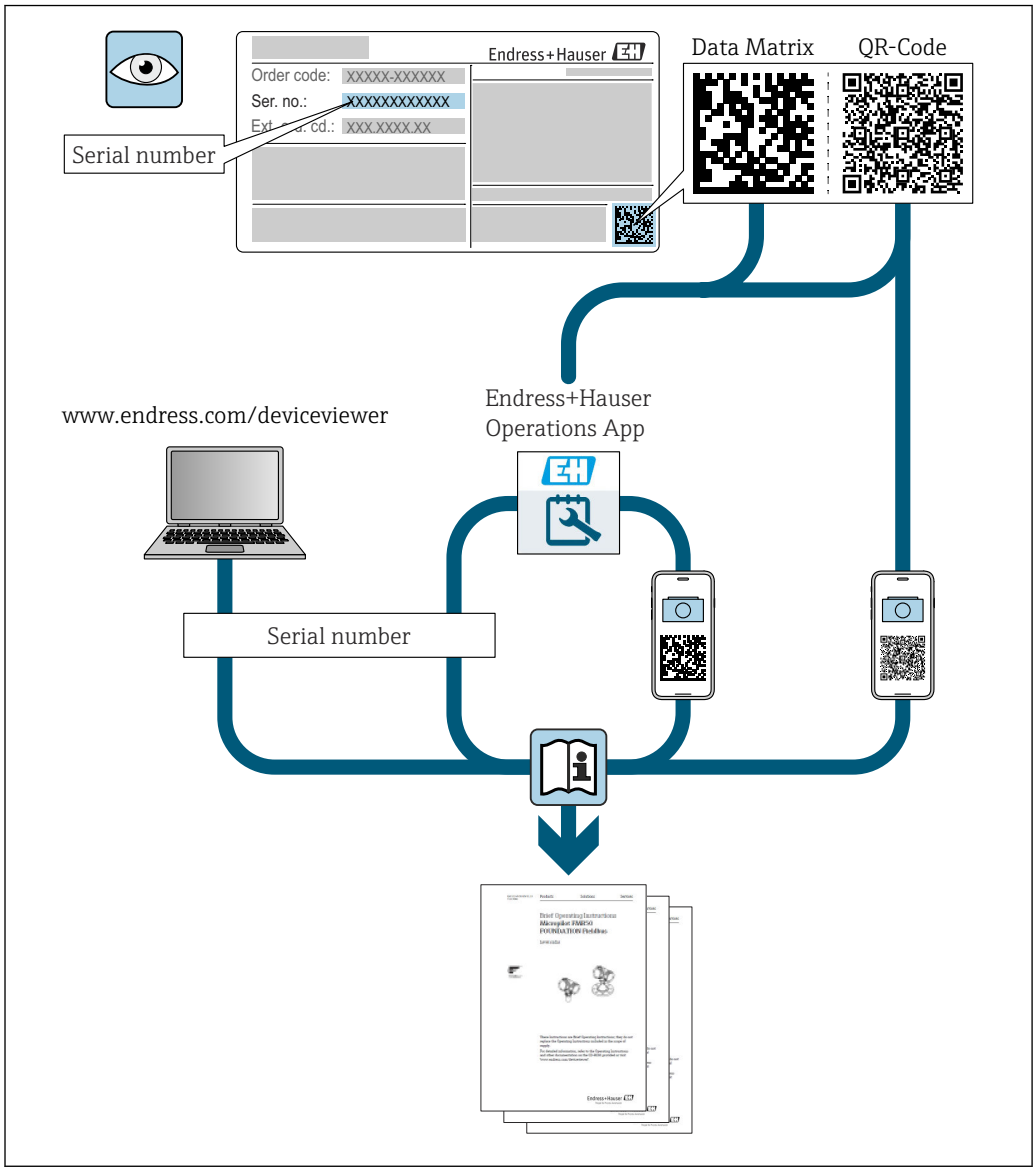

A0023555

- Make sure the document is stored in a safe place such that it is always available when working on or with the device
- Avoid danger to individuals or the facility: read the "Basic safety instructions" section carefully, as well as all other safety instructions in the document that are specific to working procedures

The manufacturer reserves the right to modify technical data without prior notice. The Endress+Hauser sales organization will supply you with current information and updates to these instructions.

Table of contents

1 About this document 6
1.1 Document function 6
1.2 Symbols 6
1.2.1 Safety symbols 6
1.2.2 Electrical symbols 6
1.2.3 Tool symbols 6
1.2.4 Communication-specific symbols 6
1.2.5 Symbols for certain types of Information 6
1.2.6 Symbols in graphics 7
1.3 Documentation 7
1.4 Change history 7
1.5 Registered trademarks 7

2 Basic safety instructions 8
2.1 Requirements for the personnel 8
2.2 Intended use 8
2.3 Workplace safety 8
2.4 Operational safety 8
2.5 Product safety 9
2.6 IT security 9
2.7 Device-specific IT security 9
2.7.1 Protecting access via a password 10
2.7.2 Access via web server 10

3 Product description 11
3.1 Measuring principle 11
3.1.1 Point level measurement 11
3.2 Product design 12

4 Incoming acceptance and product identification 12
4.1 Product identification 13
4.1.1 Nameplate 13
4.1.2 Manufacturer address 13
4.2 Storage and transport 13
4.2.1 Storage conditions 13
4.2.2 Transporting the device 13

5 Installation 14
5.1 Installation requirements 14
5.1.1 Pay attention to the temperature for devices with a PFA coating (conductive) 15
5.1.2 Take switch point into consideration . 15
5.1.3 Take viscosity into consideration 16
5.1.4 Avoid buildup 17
5.1.5 Take clearance into consideration . . . 17
5.1.6 Support the device 18
5.2 Installing the device 19
5.2.1 Installation 19
5.3 Post-mounting check 23

6 Electrical connection 23
6.1 Connecting requirements 23
6.1.1 Cover with securing screw 23
6.1.2 Potential equalization 24
6.2 Connecting the device 24
6.2.1 Supply voltage 24
6.2.2 Terminals 25
6.2.3 Cable specification 25
6.2.4 Overvoltage protection 25
6.2.5 Wiring 26
6.2.6 Terminal assignment 26
6.2.7 Cable entries 27
6.2.8 Available device plugs 27
6.3 Ensuring the degree of protection 28
6.3.1 Degree of protection 28
6.4 Post-connection check 28

7 Operation options 28
7.1 Overview of operation options 28
7.2 Electronic insert (FEL60P) - Ethernet-APL . . 29
7.3 Structure and function of the operating menu 29
7.3.1 User roles and related access authorization 29
7.4 Access to operating menu via onsite display . . 29
7.4.1 Device display (optional) 29
7.4.2 Operation via Bluetooth® wireless technology (optional) 30
7.5 Access to the operating menu via the web browser 31
7.5.1 Function scope 31
7.5.2 Requirements 32
7.5.3 Establishing a connection 33
7.5.4 Operator interface 34
7.5.5 Disabling the Web server 35
7.5.6 Logging out 36
7.6 Access to the operating menu via the operating tool 36
7.6.1 Connecting the operating tool 37
7.7 FieldCare 38
7.7.1 Function range 38
7.8 DeviceCare 38
7.8.1 Function scope 38
7.9 HistoROM data management 38

8 System integration 39
8.1 Overview of device description files 39
8.1.1 Current version data for the device . . . 39
8.1.2 Operating tools 39
8.2 Device master file (GSD) 39
8.2.1 File name of the device master file (GSD) 40
8.3 Cyclic data transmission 40
8.3.1 Overview of the modules 40

8.3.2 Description of the modules 40
8.3.3 Status coding 42
8.3.4 Startup configuration 42
8.4 System redundancy S2 42

9 Commissioning 43

9.1 Preliminaries 43
9.2 Post-installation and function check 44
9.3 Establishing a connection via FieldCare and DeviceCare 44
9.3.1 Via PROFINET protocol 44
9.3.2 Via service interface (CDI) 44
9.4 Hardware settings 44
9.4.1 Activating the default IP address 44
9.5 Setting the device name 45
9.5.1 Configuring the "Device tag" parameter via the operating menu . . . 45
9.5.2 Configuring the "PROFINET device name" parameter via the operating menu 45
9.5.3 Configuring the "PROFINET device name" parameter via the automation system 45
9.6 Configuring communication parameters via software 45
9.7 Configuring the operating language 45
9.7.1 Local display 45
9.7.2 Operating tool 46
9.7.3 Web server 46
9.8 Configuring the device 46
9.8.1 Commissioning with "Commissioning" wizard 46
9.9 Protecting settings from unauthorized access . 47
9.9.1 Hardware locking or unlocking 47
9.9.2 Software locking or unlocking 47
9.9.3 Display operation - locking or unlocking 47
9.10 Storing the oscillation frequencies 48
9.11 Simulation 48

10 Operation 48

10.1 Reading the device locking status 48
10.2 Reading off measured values 48
10.3 Adapting the device to process conditions 48
10.4 Heartbeat Technology (optional) 49
10.4.1 "Heartbeat Verification" wizard 49
10.4.2 Data exchange performed by the user (asset management system) 49

11 Diagnostics and troubleshooting . . . 50

11.1 General troubleshooting 50
11.1.1 General faults 50
11.1.2 Fault - SmartBlue operation with Bluetooth® wireless technology 50
11.1.3 Additional measures 51
11.2 Diagnostic information via LED 52
11.3 Diagnostic information on onsite display 53
11.3.1 Diagnostic message 53
11.4 Diagnostic information in the web browser . . . 54
11.4.1 Diagnostic options 54
11.4.2 Calling up remedial actions 55
11.5 Diagnostic list 55
11.6 Event logbook 57
11.6.1 Event history 57
11.6.2 Filtering the event logbook 58
11.6.3 Overview of information events 58
11.7 Device reset 59
11.7.1 Reset password via operating tool . . . 59
11.7.2 Reset device via operating tool 59
11.7.3 Resetting the device via operating keys on the electronic insert 59
11.8 Device information 60

12 Maintenance 60

12.1 Maintenance tasks 60
12.1.1 Cleaning 60

13 Repair 61

13.1 General notes 61
13.1.1 Repair concept 61
13.1.2 Repairs to Ex-approved devices 61
13.2 Spare parts 61
13.3 Replacement 61
13.3.1 HistoROM 61
13.4 Return 62
13.5 Disposal 62

14 Accessories 62

14.1 Device Viewer 62
14.2 Weather protection cover: 316L, XW112 62
14.3 Weather protection cover, plastic, XW111 . . . 63
14.4 M12 socket 64
14.5 Field Xpert SMT70 64
14.6 DeviceCare SFE100 64
14.7 FieldCare SFE500 64

15 Technical data 64

15.1 Input 64
15.1.1 Measured variable 64
15.1.2 Measuring range 65
15.2 Output 65
15.2.1 Output signal 65
15.2.2 Signal on alarm 65
15.2.3 Damping 65
15.2.4 Switch output 65
15.2.5 Ex connection data 65
15.2.6 Protocol-specific data 65
15.3 Environment 66
15.3.1 Ambient temperature range 66
15.3.2 Storage temperature 68
15.3.3 Humidity 68
15.3.4 Operating height 68

15.3.5 Climate class 68
15.3.6 Degree of protection 68
15.3.7 Vibration resistance 69
15.3.8 Shock resistance 69
15.3.9 Mechanical load 69
15.3.10 Pollution degree 69
15.3.11 Electromagnetic compatibility (EMC) 69
15.4 Process 69
15.4.1 Process temperature range 69
15.4.2 Thermal shock 69
15.4.3 Process pressure range 70
15.4.4 Overpressure limit 70
15.4.5 Medium density 70
15.4.6 Viscosity 71
15.4.7 Pressure tightness 71
15.4.8 Solids contents 71
15.5 Additional technical data 71

1 About this document

1.1 Document function

These Operating Instructions contain all the information required in the various life cycle phases of the device: from product identification, incoming acceptance and storage, to installation, connection, operation and commissioning, through to troubleshooting, maintenance and disposal.

1.2 Symbols

1.2.1 Safety symbols

DANGER
This symbol alerts you to a dangerous situation. Failure to avoid this situation will result in serious or fatal injury.

WARNING
This symbol alerts you to a potentially dangerous situation. Failure to avoid this situation can result in serious or fatal injury.

CAUTION
This symbol alerts you to a potentially dangerous situation. Failure to avoid this situation can result in minor or medium injury.

NOTICE
This symbol alerts you to a potentially harmful situation. Failure to avoid this situation can result in damage to the product or something in its vicinity.

1.2.2 Electrical symbols

Ground connection
Grounded clamp, which is grounded via a grounding system.

Protective earth (PE)
Ground terminals, which must be grounded prior to establishing any other connections. The ground terminals are located on the inside and outside of the device.

1.2.3 Tool symbols

Flat-blade screwdriver

Allen key

Open-ended wrench

1.2.4 Communication-specific symbols

Bluetooth® wireless technology
Wireless data transmission between devices over a short distance via radio technology.

1.2.5 Symbols for certain types of Information

Permitted
Procedures, processes or actions that are permitted.

Forbidden
Procedures, processes or actions that are forbidden.

Tip
Indicates additional information

Reference to documentation

Reference to another section

1., 2., 3. Series of steps

1.2.6 Symbols in graphics

A, B, C ... View

1, 2, 3 ... Item numbers

Hazardous area

Safe area (non-hazardous area)

1.3 Documentation

For an overview of the scope of the associated Technical Documentation, refer to the following:
- *Device Viewer* (www.endress.com/deviceviewer): Enter the serial number from the nameplate
- *Endress+Hauser Operations app*: Enter serial number from nameplate or scan matrix code on nameplate.

1.4 Change history

The firmware version can explicitly be ordered via the product structure. This makes it possible to ensure the compatibility of the firmware version with an existing or planned system integration.

Firmware version: 01.00.00
- Documentation version: BA02339F/00/EN/01.24-00
- Initial software, valid from: 01.10.2025

1.5 Registered trademarks

PROFINET®
Registered trademark of the PROFIBUS User Organization, Karlsruhe, Germany

Ethernet-APL™
- Ethernet-APL ADVANCED PHYSICAL LAYER
- Registered trademark of the PROFIBUS Nutzerorganisation e.V. (Profibus User Organization), Karlsruhe - Germany

Bluetooth®
The *Bluetooth®* word mark and logos are registered trademarks owned by the Bluetooth SIG, Inc. and any use of such marks by Endress+Hauser is under license. Other trademarks and trade names are those of their respective owners.

Apple®
Apple, the Apple logo, iPhone, and iPod touch are trademarks of Apple Inc., registered in the U.S. and other countries. App Store is a service mark of Apple Inc.

Android®
Android, Google Play and the Google Play logo are trademarks of Google Inc.

2 Basic safety instructions

2.1 Requirements for the personnel

The personnel for installation, commissioning, diagnostics and maintenance must fulfill the following requirements:
- Trained, qualified specialists must have a relevant qualification for this specific function and task.
- Are authorized by the plant owner/operator.
- Are familiar with federal/national regulations.
- Before starting work, read and understand the instructions in the manual and supplementary documentation as well as the certificates (depending on the application).
- Follow instructions and comply with basic conditions.

The operating personnel must fulfill the following requirements:
- Are instructed and authorized according to the requirements of the task by the facility's owner-operator.
- Follow the instructions in this manual.

2.2 Intended use

The device described in this manual is intended only for the level measurement of liquids.

Do not exceed or drop below the relevant limit values for the device
See the Technical Documentation

Incorrect use
The manufacturer is not liable for damage caused by improper or non-designated use.

Avoid mechanical damage:
- Do not touch or clean device surfaces with pointed or hard objects.

Clarification for borderline cases:
- For special media and fluids for cleaning, Endress+Hauser is glad to provide assistance in verifying the corrosion resistance of fluid-wetted materials, but does not accept any warranty or liability.

Residual risks
Due to the transfer of heat from the process and power dissipation within the electronics, the temperature of the housing may increase to up to 80 °C (176 °F) during operation. When in operation, the sensor can reach a temperature close to the medium temperature.

Danger of burns from contact with surfaces!
- In the event of elevated fluid temperatures, ensure protection against contact to prevent burns.

2.3 Workplace safety

For work on and with the device:
- Wear the required personal protective equipment according to federal/national regulations.

2.4 Operational safety

Damage to the device!
- Operate the device only if it is in proper technical condition, free from errors and faults.
- The operator is responsible for the trouble-free operation of the device.

Configuration, testing and maintenance work on the device

Process safety may be at risk during configuration, testing and maintenance work on the device.

- ▶ Alternative supervisory measures must be taken to guarantee the operational safety and process safety.

Modifications to the device

Unauthorized modifications to the device are not permitted and can lead to unforeseeable dangers.

- ▶ If modifications are nevertheless required, consult Endress+Hauser.

Repair

To ensure continued operational safety and reliability:

- ▶ Only perform repair work on the device if this is expressly permitted.
- ▶ Observe federal/national regulations pertaining to the repair of an electrical device.
- ▶ Use original spare parts and accessories from Endress+Hauser only.

Hazardous area

To eliminate danger to persons or the facility when the device is used in the hazardous area (e.g. explosion protection):

- ▶ Check the nameplate to verify if the device ordered can be put to its intended use in the hazardous area.
- ▶ Comply with the instructions in the separate supplementary documentation, which is an integral part of this manual.

2.5 Product safety

This state-of-the-art device is designed and tested in accordance with good engineering practice to meet operational safety standards. It left the factory in a condition in which it is safe to operate.

It meets general safety standards and legal requirements. It also complies with the EU directives listed in the device-specific EU declaration of conformity. The manufacturer confirms this by affixing the CE mark.

2.6 IT security

The manufacturer warranty is valid only if the product is installed and used as described in the Operating Instructions. The product features security mechanisms to protect it against any inadvertent changes to the settings. Security measures, which provide additional protection for the product and associated data transfer, must be implemented by the operators themselves in line with their security standards.

2.7 Device-specific IT security

The device offers specific functions to support protective measures by the operator. These functions can be configured by the user and guarantee greater in-operation safety if used correctly. An overview of the most important functions is provided in the following section:

- Write protection via hardware write protection switch
- Access code to change user role (applies to operation via display, Bluetooth® wireless technology or FieldCare, DeviceCare, asset management tools (e.g. AMS, PDM and web server)

Function/interface	Factory setting	Recommendation
Access code (also applies to web server login or FieldCare connection)	Not enabled (0000)	Assign a customized access code during commissioning
Web server	Enabled	On an individual basis following risk assessment
Bluetooth® wireless technology	Enabled	On an individual basis following risk assessment
Service interface (CDI)	Enabled	On an individual basis following risk assessment
Write protection via hardware write protection switch	Not enabled	On an individual basis following risk assessment

2.7.1 Protecting access via a password

Different passwords are available to protect write access to the parameters of the device.

Protect write access to the parameters of the device via the local display, web browser or operating tool (e.g. FieldCare, DeviceCare). Access authorization is clearly regulated through the use of a user-specific access code.

User-specific access code

Write access to the parameters of the device via the local display, web browser or operating tool (e.g. FieldCare, DeviceCare) can be protected using the editable, user-specific access code.

When delivered, the device does not have an access code; the default value is *0000* (open).

General notes on the use of passwords

- During commissioning, change the access code used when the device was delivered
- When defining and managing the access code, comply with the general rules for the generation of a secure password
- The user is responsible for managing the access code and for using the code with due care

For more information, see the "Resetting the device" section.

2.7.2 Access via web server

Thanks to the integrated web server, the device can be operated and configured using a web browser and via PROFINET over Ethernet-APL. In addition to the measured values, status information on the device is displayed and can be used to monitor device health. Furthermore the device data can be managed and the network parameters can be configured.

Access to the network is required for the PROFINET over Ethernet-APL connection.

Supported functions
Data exchange between the operating unit (such as a notebook, for example,) and device:
- Export of parameter settings (PDF file, create documentation of the measuring point configuration)
- Export of Heartbeat Technology verification report (PDF file, only available with the application package Heartbeat Verification + Monitoring)
- Export of WHG mode report
- Download driver (GSDML) for system integration

The web server is enabled when the device is delivered. The web server can be disabled via the **Web server functionality** parameter if necessary (e.g. after commissioning).

The device and status information can be hidden on the login page. This prevents unauthorized access to the information.

Description of device parameters.

3 Product description

Level switch for all liquids, for minimum or maximum detection in tanks, vessels and pipes, including in hazardous areas.

Different coatings (plastic or enamel) offer a high degree of corrosion protection for applications in aggressive media.

3.1 Measuring principle

The sensor's vibrating fork vibrates at its natural frequency. As soon as the liquid covers the vibrating fork, the oscillation frequency decreases. The change in frequency causes the level switch to switch.

3.1.1 Point level measurement

Maximum or minimum detection for liquids in tanks or pipes in all industries. Suitable for leakage monitoring, pump dry-running protection or overfill prevention, for example.

Specific versions are suitable for use in hazardous areas.

The level switch differentiates between the "covered" and "not covered" conditions.

Depending on the MIN (minimum detection) or MAX (maximum detection) modes, there are two possibilities in each case: OK status and demand mode.

OK status
- In MIN mode, the vibrating fork is covered, e.g. pump dry-run protection
- In MAX mode, the vibrating fork is not covered, e.g. overfill protection

Demand mode
- In MIN mode, the vibrating fork is not covered, e.g. pump dry-run protection
- In MAX mode, the vibrating fork is covered, e.g. overfill protection system

3.2 Product design

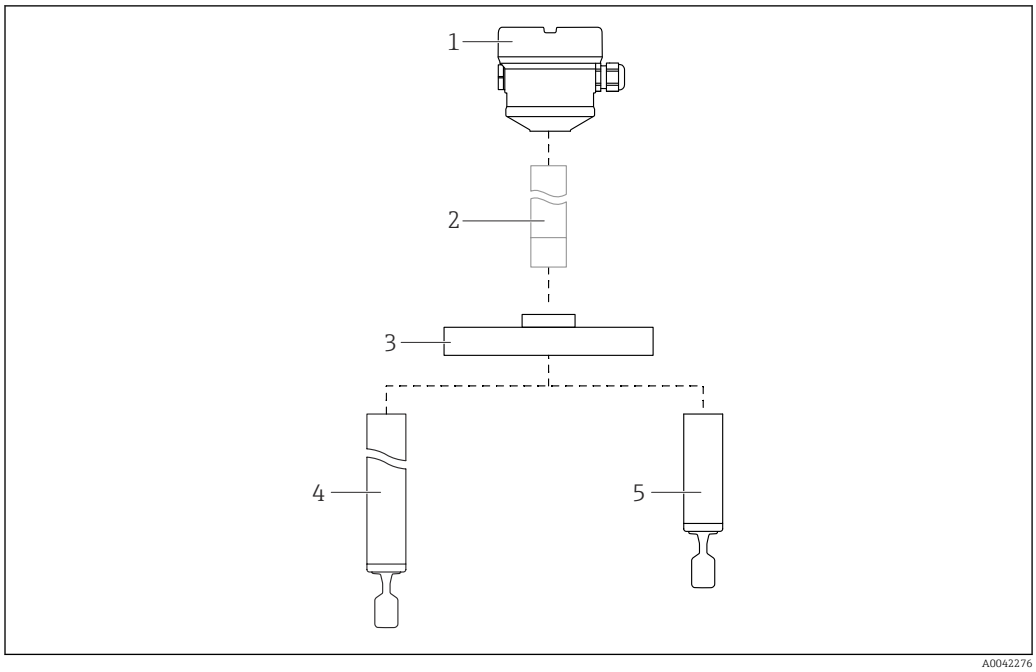

1 Product design

1 *Housing with electronic insert and cover*
2 *Temperature spacer, pressure-tight feedthrough (second line of defense), optional*
3 *Process connection flange*
4 *Pipe extension probe with tuning fork*
5 *Short pipe probe with tuning fork*

Plastic-coated or enamel-coated: flange, pipe extension and tuning fork
No enamel coating: temperature spacer, pressure-tight feedthrough

4 Incoming acceptance and product identification

On receipt of the delivery:

1. Check the packaging for damage.
   ↳ Report all damage immediately to the manufacturer.
   Do not install damaged components.
2. Check the scope of delivery using the delivery note.
3. Compare the data on the nameplate with the order specifications on the delivery note.
4. Check the technical documentation and all other necessary documents, e.g. certificates, to ensure they are complete.

If one of the conditions is not satisfied, contact the manufacturer.

4.1 Product identification

The following options are available for identification of the device:
- Nameplate specifications
- Order code with breakdown of the device features on the delivery note
- Enter the serial numbers from the nameplates in *Device Viewer* (www.endress.com/deviceviewer): all the information about the device is displayed.

4.1.1 Nameplate

Do you have the correct device?

The nameplate provides you with the following information on the device:
- Manufacturer identification, device designation
- Order code
- Extended order code
- Serial number
- Tag name (TAG) (optional)
- Technical values such as supply voltage, current consumption, ambient temperature, communication-specific data (optional)
- Degree of protection
- Approvals with symbols
- Reference to Safety Instructions (XA) (optional)

▶ Compare the information on the nameplate with the order.

4.1.2 Manufacturer address

Endress+Hauser SE+Co. KG
Hauptstraße 1
79689 Maulburg, Germany

Place of manufacture: See nameplate.

4.2 Storage and transport

4.2.1 Storage conditions

Use original packaging.

Storage temperature

−40 to +80 °C (−40 to +176 °F)

4.2.2 Transporting the device

NOTICE

Improper handling of the device, particularly of coated components such as flange, pipe extension or vibrating fork.
Scratches or impacts may cause damage to the coated surface of the device.
- ▶ Transport the device to the measuring point in the original packaging.
- ▶ Protect coated components.
- ▶ Only handle the device by the housing, flange or extension pipe.

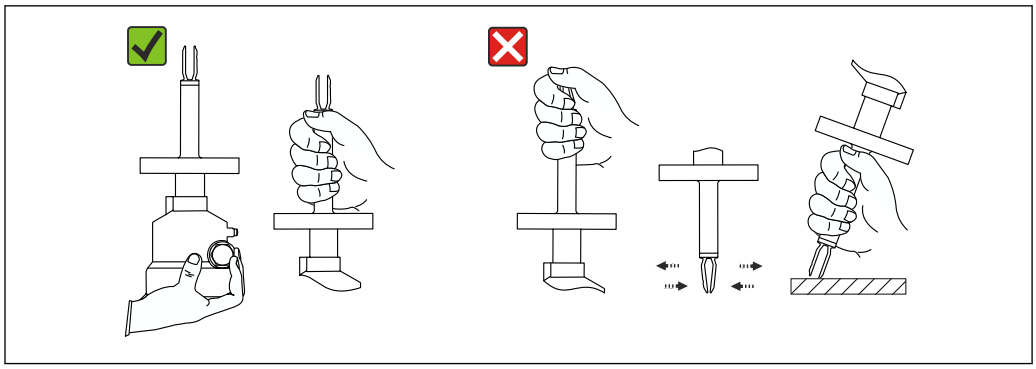

A0042281

2 Handling during transport or handling of the device

Do not bend, shorten or extend the vibrating fork.

5 Installation

Mounting instructions
- Any orientation for version with a pipe length up to approx. 500 mm (19.7 in)
- Vertical orientation from above for device with long pipe
- Minimum distance between the vibrating fork and the tank wall or pipe wall: 10 mm (0.39 in)

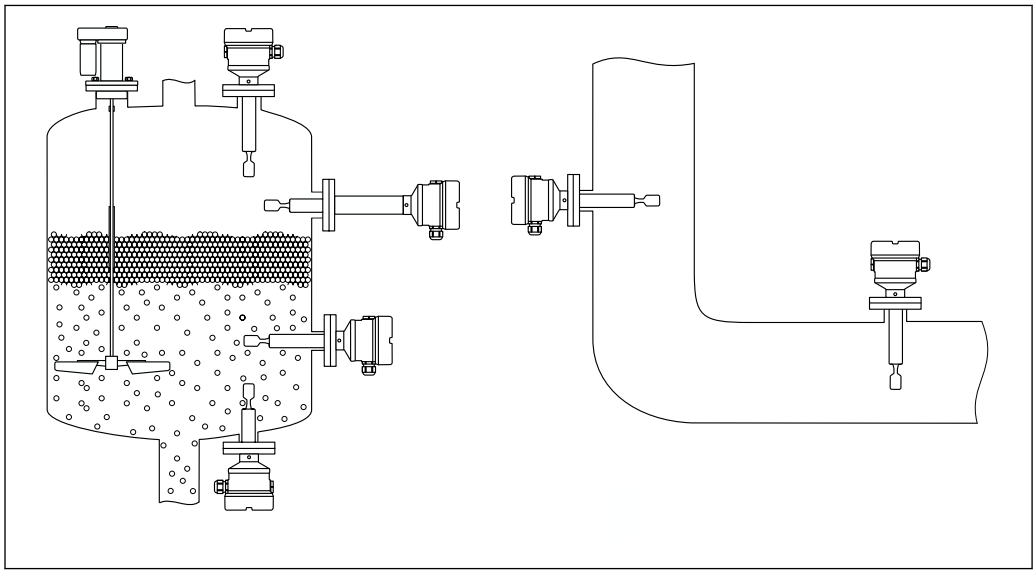

A0042153

3 Installation examples for a vessel, tank or pipe

5.1 Installation requirements

NOTICE

Scratches or impacts damage the coated surface of the device.

▶ Ensure the device is handled properly and professionally during all mounting work.

In the case of sensors with an ECTFE or PFA coating, a PTFE seal is fixed on the flange.

5.1.1 Pay attention to the temperature for devices with a PFA coating (conductive)

The difference in temperature between outer and inner side of flange must not exceed 60 °C (140 °F).

If necessary, use external insulation.

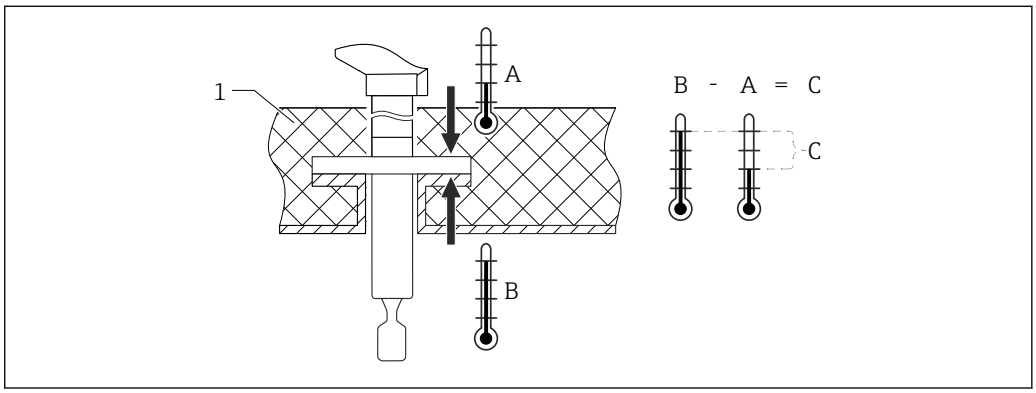

4 *Difference in temperature between outer and inner side of flange*

1 Insulation
A Temperature of flange, outer side
B Temperature of flange, inner side, for ECTFE maximum 120 °C (248 °F)
C Temperature difference for ECTFE, PFA maximum 60 °C (140 °F)

5.1.2 Take switch point into consideration

The following are typical switch points, depending on the orientation of the level switch and the coating.

Water +23 °C (+73 °F)

Minimum distance between the tuning fork and the tank wall or pipe wall: 10 mm (0.39 in)

Plastic-coated vibrating fork (ECTFE, PFA)

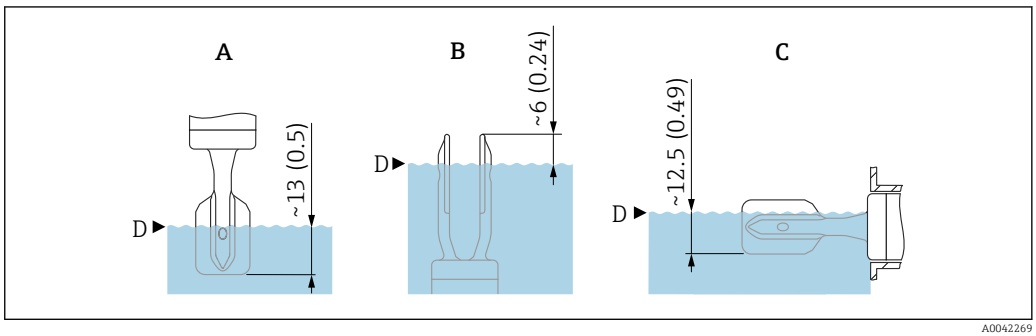

5 *Typical switch points, plastic-coated vibrating fork (ECTFE, PFA), dimensions without coating thickness. Unit of measurement mm (in)*

A Installation from above
B Installation from below
C Installation from the side
D Switch point

Enamel-coated vibrating fork

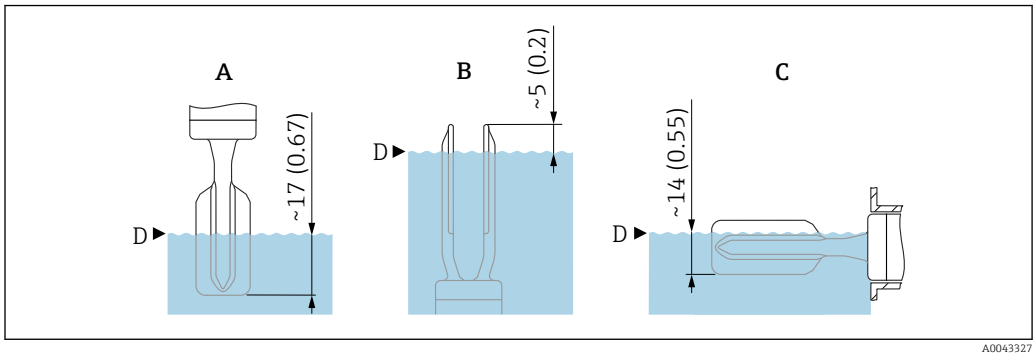

6 *Typical switch points, enamel-coated vibrating fork, dimensions without coating thickness. Unit of measurement mm (in)*

A Installation from above
B Installation from below
C Installation from the side
D Switch point

Coating material and layer thickness

ECTFE
- Lower limit: 0.5 mm (0.02 in)
- Upper limit: 1.6 mm (0.06 in)
- Maximum diameter: Ø 24.6 mm (0.97 in)

PFA (Edlon™), PFA (RubyRed®), PFA (conductive)
- Lower limit: 0.45 mm (0.02 in)
- Upper limit: 1.6 mm (0.06 in)
- Maximum diameter: Ø 24.6 mm (0.97 in)

Enamel
- Lower limit: 0.4 mm (0.02 in)
- Upper limit: 0.8 mm (0.03 in)
- Maximum diameter: Ø 23 mm (0.91 in)

5.1.3 Take viscosity into consideration

Viscosity values
- Low viscosity : < 2 000 mPa·s
- High viscosity: > 2 000 to 10 000 mPa·s

Low viscosity

Low viscosity, e.g. water: < 2 000 mPa·s

It is permitted to position the tuning fork within the installation socket.

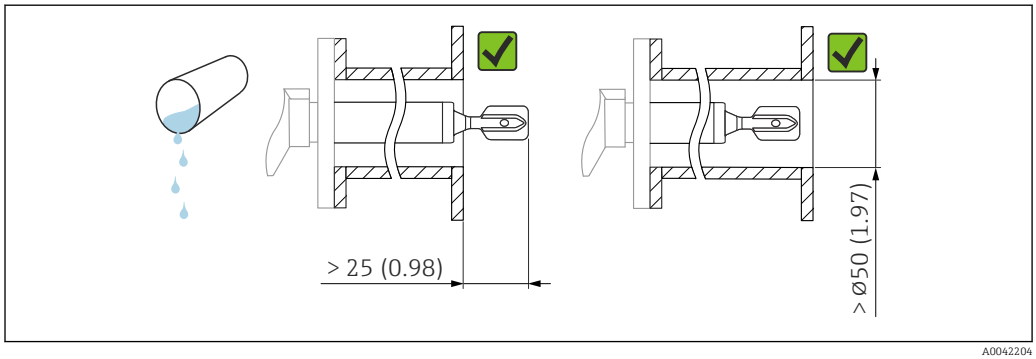

7 *Installation example for low-viscosity liquids. Unit of measurement mm (in)*

High viscosity

NOTICE

Highly viscous liquids may cause switching delays.

- ▶ Make sure that the liquid can run off the tuning fork easily.
- ▶ Deburr the socket surface.

High viscosity, e.g. viscous oils: ≤ 10 000 mPa·s

The tuning fork must be located outside the installation socket!

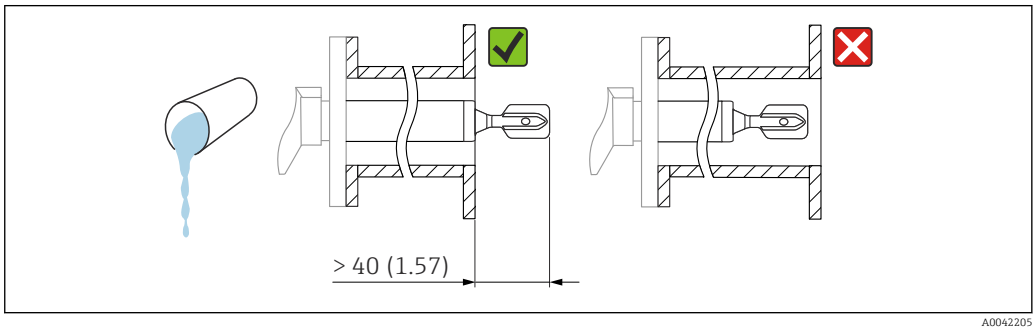

8 *Installation example for a highly viscous liquid. Unit of measurement mm (in)*

5.1.4 Avoid buildup

- Use short installation sockets to ensure that the tuning fork projects freely into the vessel
- Leave sufficient distance between the buildup expected on the tank wall and the tuning fork

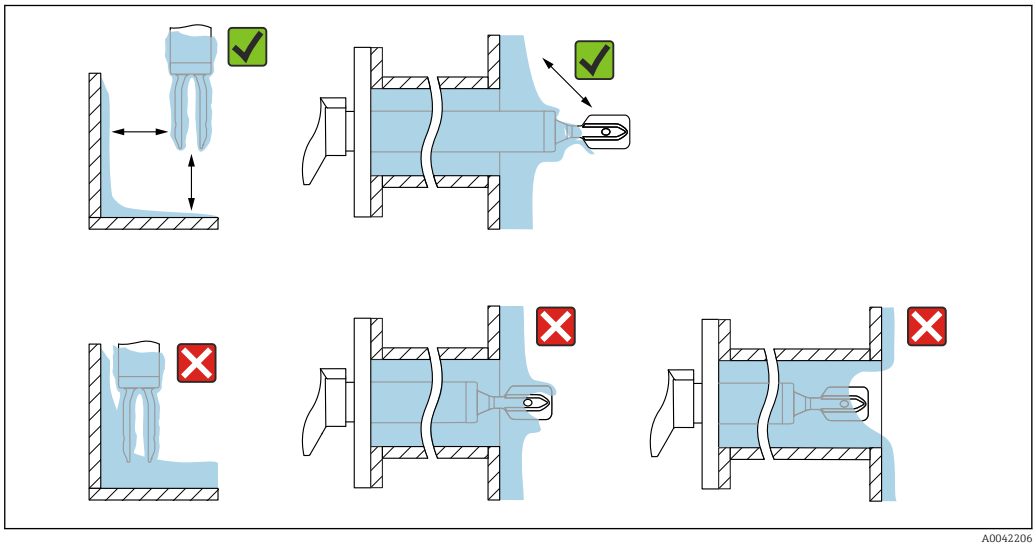

9 *Installation examples for a highly viscous process medium*

5.1.5 Take clearance into consideration

Allow sufficient space outside the tank for mounting, connection and settings involving the electronic insert.

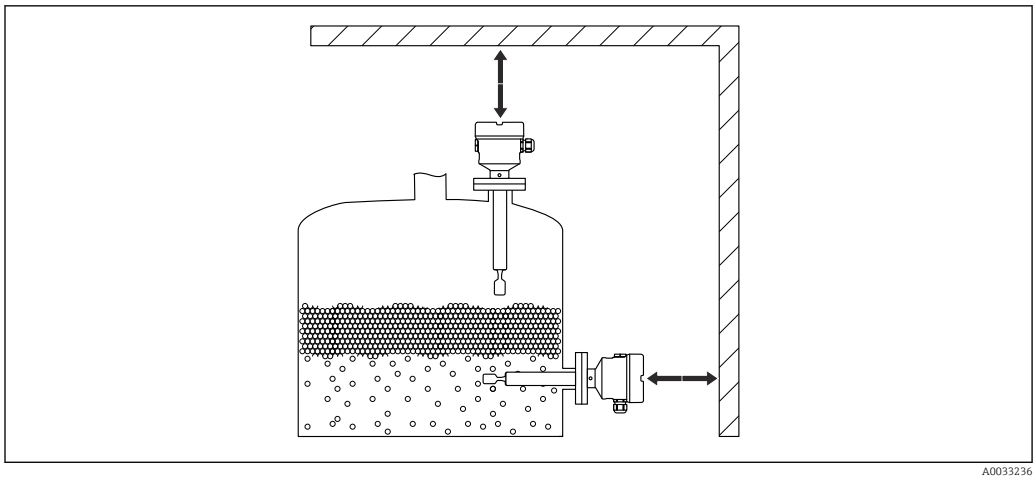

10 *Take clearance into consideration*

5.1.6 Support the device

NOTICE

If the device is supported incorrectly, shocks and vibrations can damage the coated surface.

- Only use a support in conjunction with ECTFE or PFA plastic coating.
- Use suitable supports only.

Support the device in the event of severe dynamic load. Maximum lateral loading capacity of the pipe extensions and sensors: 75 Nm (55 lbf ft).

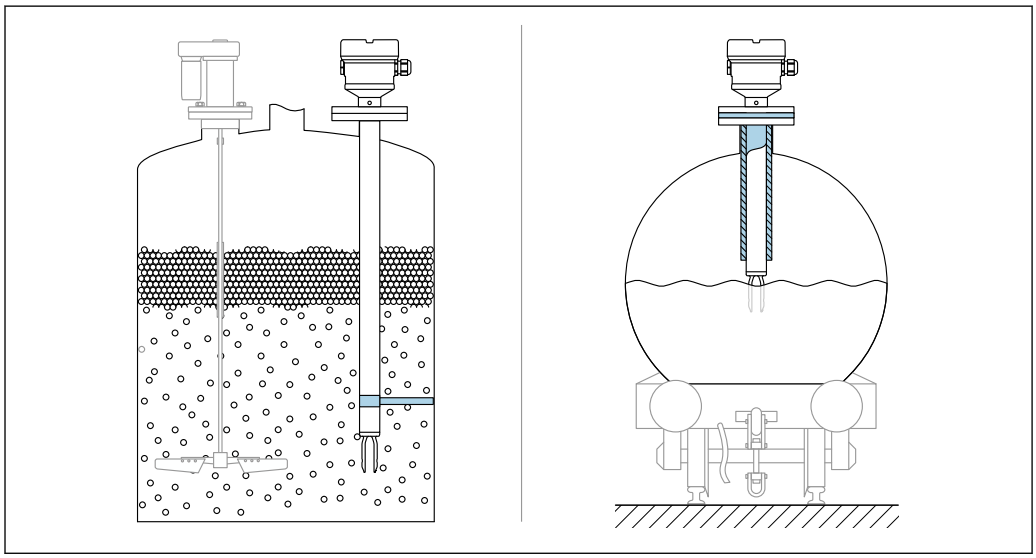

11 *Examples of support in the event of dynamic load*

Marine approval: In the case of pipe extensions or sensors longer than 1 600 mm (63 in), a support is needed at least every 1 600 mm (63 in).

5.2 Installing the device

5.2.1 Installation

Aligning the tuning fork using the marking

The tuning fork can be aligned using the marking in such a way that the medium drains off easily and buildup is avoided.

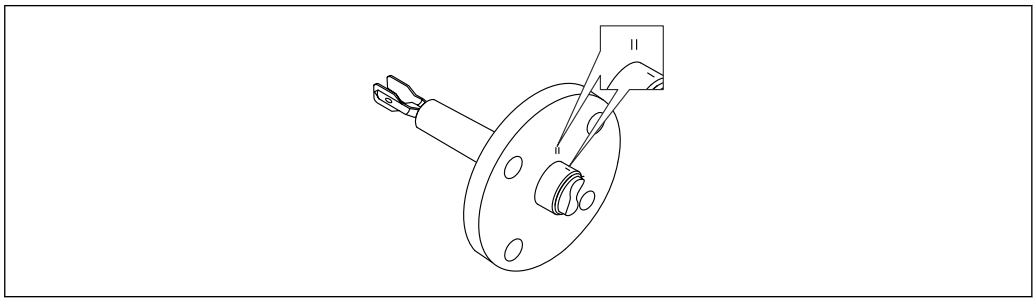

A0042207

12 *Position of the tuning fork when installed horizontally in the vessel using the marking*

Installing the device in piping

- Flow velocity up to 5 m/s with a viscosity of 1 mPa·s and density of 1 g/cm³ (62.4 lb/ft³) (SGU).
  Check for correct functioning in the event of other process medium conditions.
- The flow will not be significantly impeded if the tuning fork is correctly aligned and the marking is pointing in the direction of flow.
- The marking is visible when installed.

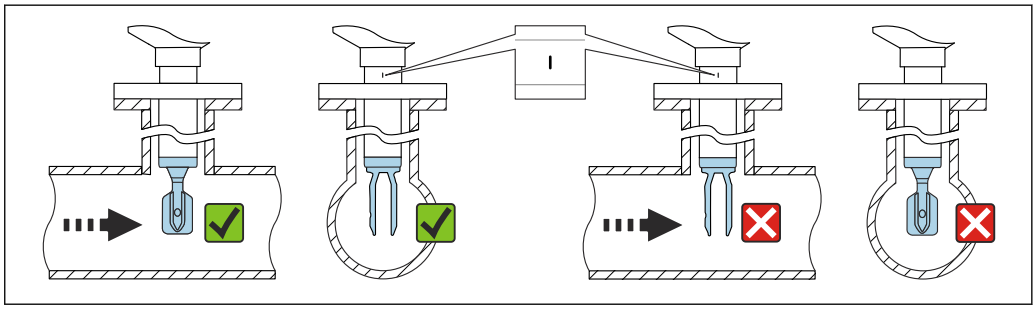

A0042208

13 *Installation in pipes (take fork position and marking into consideration)*

Aligning the cable entry

All housings can be aligned. Forming a drip loop on the cable prevents moisture from entering the housing.

Housing without set screw

The device housing can be rotated up to 350°.

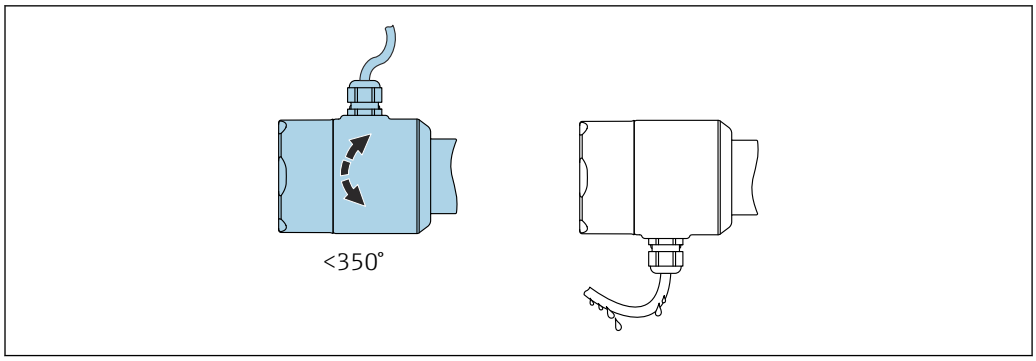

14 *Housing without set screw; form a drip loop on the cable.*

Housing with locking screw

NOTICE

The locking screw is not sufficiently tightened when the device is delivered.

The housing may rotate and become loose due to vibration.

- Tighten the locking screw to 3.5 Nm (2.58 lbf ft).

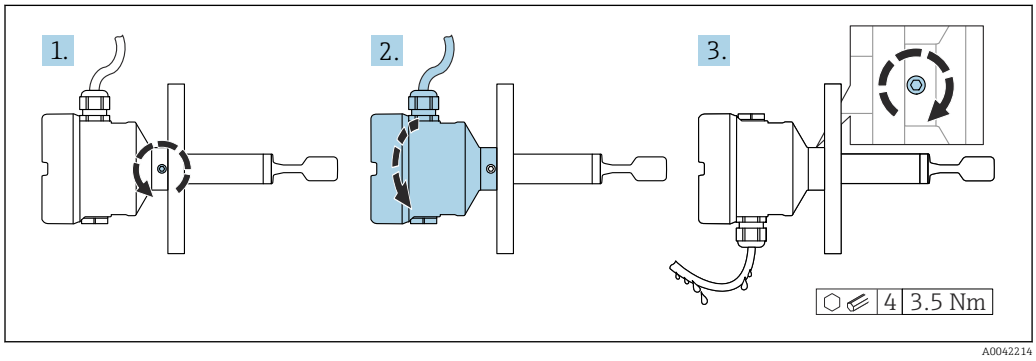

15 *Housing with external locking screw; form a drip loop on the cable*

1. Loosen the external locking screw (maximum 1.5 turns).
2. Turn the housing and align the cable entry.
3. Tighten the external locking screw.

Rotating the housing

The housing can be rotated up to 380° by loosening the locking screw.

NOTICE

The housing cannot be completely unscrewed.

- Loosen the external locking screw by a maximum of 1.5 turns. If the screw is turned further or completely removed (beyond the screw lifting point), small parts (counter disk) may become loose and fall out.
- Tighten the locking screw (hex socket 4 mm (0.16 in)) to 3.5 Nm (2.58 lbf ft) ±0.3 Nm (±0.22 lbf ft).

Closing the housing covers

NOTICE

Thread and housing cover damaged from dirt and fouling!

- Remove dirt (e.g. sand) on the thread of the covers and housing.
- If you continue to encounter resistance when closing the cover, check the thread again for fouling.

Housing thread
The threads of the electronics and connection compartment can be coated with an anti-friction coating.
The following applies for all housing materials:
Do not lubricate the housing threads.

Turning the display module

WARNING

Opening the device in hazardous environments when the supply voltage is connected
Explosion hazard due to live electrical energy.

- Do not open devices with Ex d or Ex t approval as long as the supply voltage is connected.
- Before opening the device, switch off the supply voltage and ensure no voltage is present.

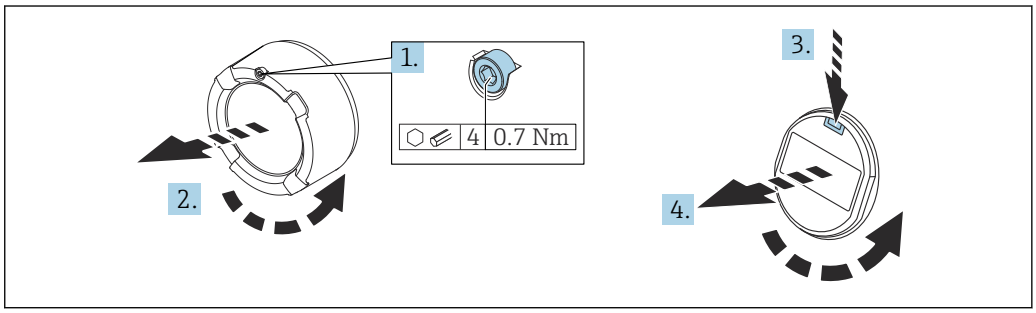

A0038224

1. If fitted: release the screw of the cover lock for the electronics compartment cover using the Allen key.
2. Unscrew the cover from the housing and inspect the cover seal.
3. Press the release mechanism and remove the display module.
4. Turn the display module to the desired position: maximum 4 × 90 ° in each direction.
5. Insert the display module into the desired position until it clicks into place.
6. Screw the cover tightly back onto the housing.
7. If fitted: tighten the screw of the cover lock using the Allen key 0.7 Nm (0.52 lbf ft) ±0.2 Nm (±0.15 lbf ft).

In the case of a dual-compartment housing, the display can be mounted in the electronics compartment as well as in the connection compartment.

Changing the installation position of the display module

The installation position of the display can be changed in the case of the dual compartment housing, L-form.

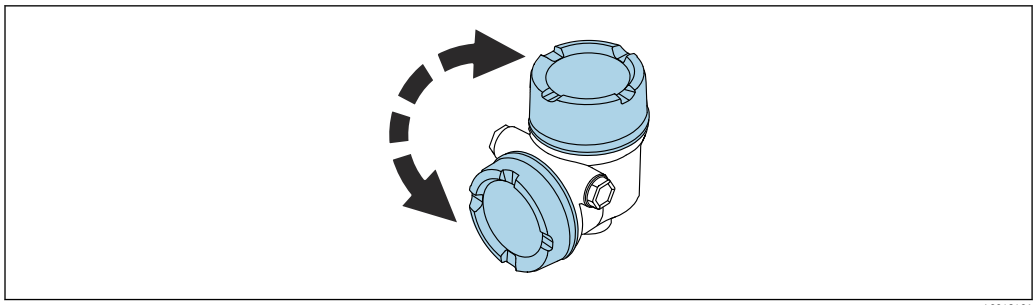

A0048401

WARNING

Opening the device in hazardous environments when the supply voltage is connected

Explosion hazard due to live electrical energy.

- ▶ Do not open devices with Ex d or Ex t approval as long as the supply voltage is connected.
- ▶ Before opening the device, switch off the supply voltage and ensure no voltage is present.

1 →

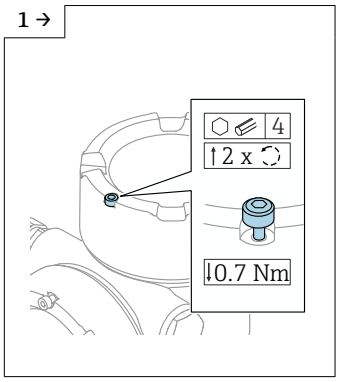

A0046831

- ▶ If fitted: release the screw of the cover lock for the display cover using the Allen key.

2 →

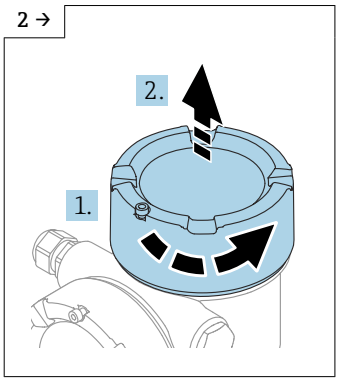

A0046832

- ▶ Unscrew the display cover and check the cover seal.

3 →

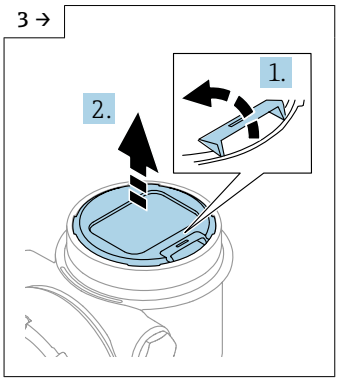

A0046833

- ▶ Press the release mechanism, remove the display module.

4 →

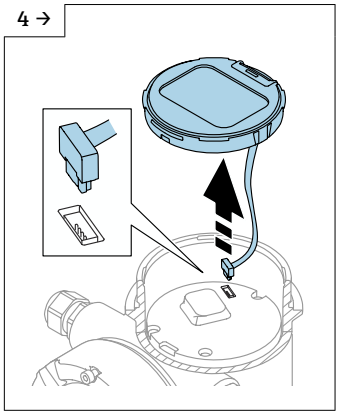

A0046834

- ▶ Release the plug connection.

5 →

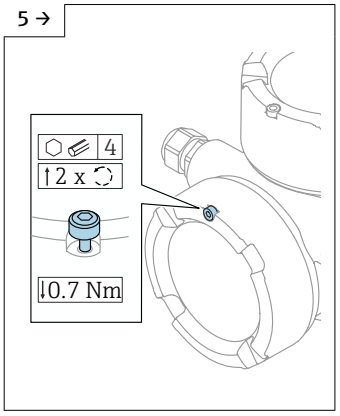

A0046923

- ▶ If fitted: release the screw of the cover lock for the connection compartment cover using the Allen key.

6 →

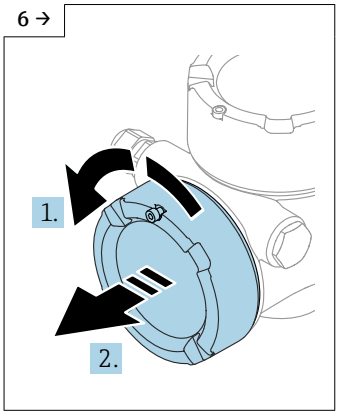

A0046924

- ▶ Unscrew the connection compartment cover, check the cover seal. Screw this cover onto the electronics compartment instead of the display cover. If fitted: tighten the screw of the cover lock using the Allen key

7 →

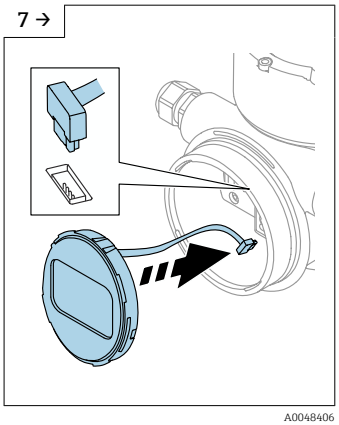

- Plug in the connection for the display module in the connection compartment.
- Insert the display module into the desired position until it clicks into place.

8

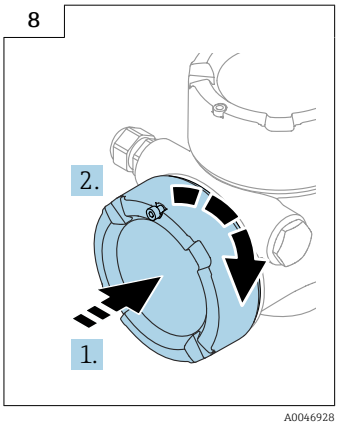

- Screw the display cover firmly back onto the housing. If fitted: tighten the screw of the cover lock using the Allen key 0.7 Nm (0.52 lbf ft).

5.3 Post-mounting check

❑ Is the device undamaged (visual inspection)?

❑ Are the measuring point number and labeling correct (visual inspection)?

❑ Is the device adequately protected from precipitation and direct sunlight?

❑ Is the device properly secured?

❑ Does the device comply with the measuring point specifications?

For example:
- Process temperature
- Process pressure
- Ambient temperature
- Measuring range

6 Electrical connection

6.1 Connecting requirements

6.1.1 Cover with securing screw

The cover is locked by a securing screw in devices for use in hazardous areas with certain explosion protection.

NOTICE

If the securing screw is not positioned correctly, the cover cannot provide secure sealing.

- Open the cover: slacken the screw of the cover lock with a maximum of 2 turns so that the screw does not fall out. Fit the cover and check the cover seal.
- Close the cover: screw the cover securely onto the housing, making sure that the securing screw is positioned correctly. There should not be any gap between the cover and housing.

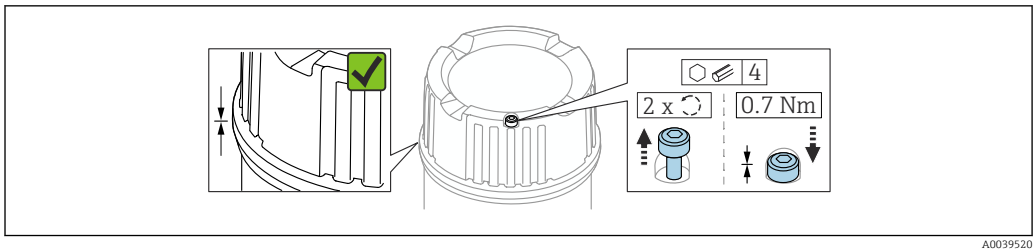

16 *Cover with securing screw*

6.1.2 Potential equalization

WARNING

Ignitable sparks or excessively high surface temperatures.
Explosion hazard!

- Please refer to the separate documentation on applications in hazardous areas for the safety instructions.

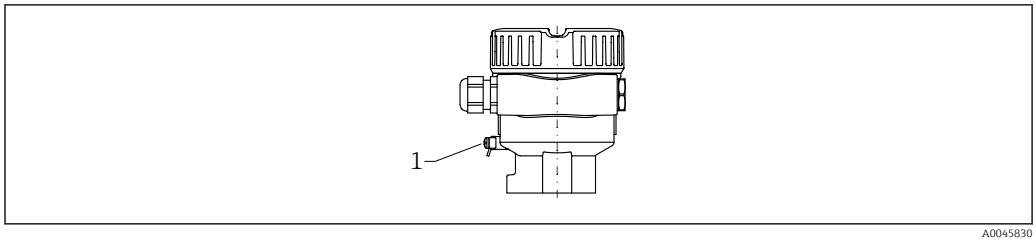

1 *Ground terminal for connecting the potential matching line (example)*

If necessary, the potential matching line can be connected to the external ground terminal of the transmitter before the device is connected.

For optimum electromagnetic compatibility:
- Potential matching line as short as possible
- Observe a cross-section of at least 2.5 mm^2 (14 AWG)

6.2 Connecting the device

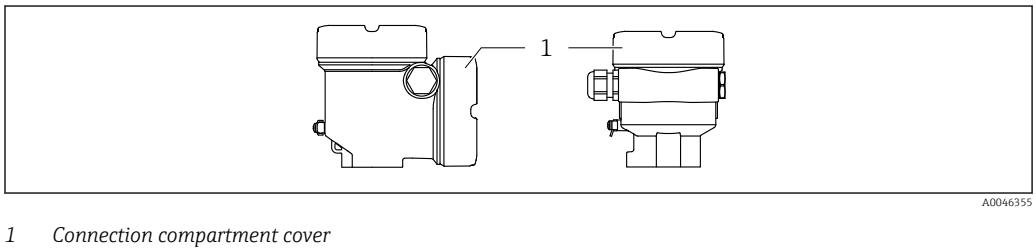

1 *Connection compartment cover*

Housing thread
The threads of the electronics and connection compartment can be coated with an anti-friction coating.
The following applies for all housing materials:
Do not lubricate the housing threads.

6.2.1 Supply voltage

APL power class A (DC 9.6 to 15 V 540 mW)

The APL field switch must be tested to ensure it meets safety requirements (e.g., PELV, SELV, Class 2) and must comply with the relevant protocol specifications.

6.2.2 Terminals

- Supply voltage and internal ground terminal: 0.5 to 2.5 mm^2 (20 to 14 AWG)
- External ground terminal: 0.5 to 4 mm^2 (20 to 12 AWG)

6.2.3 Cable specification

The cable outer diameter depends on the cable entry used.
Cable outer diameter:
- Coupling, plastic: Ø5 to 10 mm (0.2 to 0.38 in)
- Coupling, nickel-plated brass: Ø7 to 10.5 mm (0.28 to 0.41 in)
- Coupling, stainless steel: Ø7 to 12 mm (0.28 to 0.47 in)

Reference cable type

The reference cable type for APL segments is fieldbus cable type A, MAU type 1 and 3 (specified in IEC 61158-2). This cable meets the requirements for intrinsically safe applications according to IEC TS 60079-47 and can also be used in non-intrinsically safe applications.

Cable type	A
Cable capacitance	45 to 200 nF/km
Loop resistance	15 to 150 Ω/km
Cable inductance	0.4 to 1 mH/km

Further details are provided in the Ethernet-APL Engineering Guideline (https://www.ethernet-apl.org).

6.2.4 Overvoltage protection

Devices without optional overvoltage protection

Equipment from Endress+Hauser fulfills the requirements of the product standard IEC 61326-1 (Table 2 Industrial Environment).

Depending on the type of connection (DC power supply, input line, output line) and in accordance with IEC 6132 6-1, different test levels are used to prevent transient overvoltages (IEC 61000-4-5 Surge): Test level for DC power supply lines and IO lines: 1 000-V-wire to ground

Devices with optional overvoltage protection

- Spark-over voltage: min. DC 400 V
- Tested in accordance with:
  - IEC 60079-14 Subsection 12.3
  - IEC 60060-1 Section 7
- Nominal discharge current: 10 kA

NOTICE

The device can be damaged by excessively high electrical voltages.

▶ Always ground the device with integrated overvoltage protection.

Overvoltage category

Overvoltage category II

6.2.5 Wiring

WARNING

Supply voltage might be connected!
Risk of electric shock and/or explosion!

- If the device is used in hazardous areas, make sure to comply with national standards and the specifications in the Safety Instructions (XAs). The specified cable gland must be used.
- The supply voltage must match the specifications on the nameplate.
- Switch off the supply voltage before connecting the device.
- If necessary, the potential matching line can be connected to the outer ground terminal of the transmitter before the device is connected.
- A suitable circuit breaker should be provided for the device in accordance with IEC 61010.
- The cables must be adequately insulated, with due consideration given to the supply voltage and the overvoltage category.
- The connecting cables must offer adequate temperature stability, with due consideration given to the ambient temperature.
- Only operate the device with the covers closed.

1. De-energize the system.
2. Release the cover lock (if provided).
3. Unscrew the cover.
4. Guide the cables into the cable glands or cable entries. Use a suitable tool with width across flats AF24/25 (8 Nm (5.9 lbf ft)) for the M20 cable gland.
5. Connect the cables.
6. Tighten the cable glands or cable entries so that they are leak-tight. Counter-tighten the housing entry.
7. Screw the cover securely back onto the connection compartment.
8. If provided: tighten the screw of the cover lock using the Allen key 0.7 Nm (0.52 lbf ft) ±0.2 Nm (0.15 lbf ft).

6.2.6 Terminal assignment

Single compartment housing

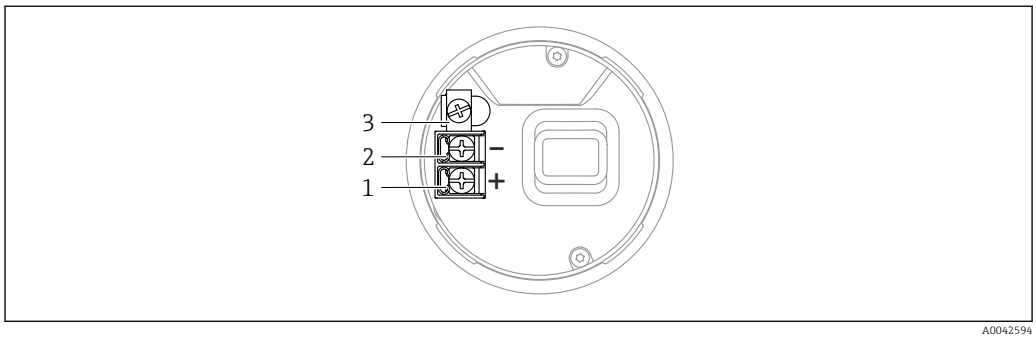

17 Connection terminals and ground terminal in the connection compartment, single compartment housing

1 Positive terminal
2 Negative terminal
3 Internal ground terminal

Dual-compartment housing, L-form

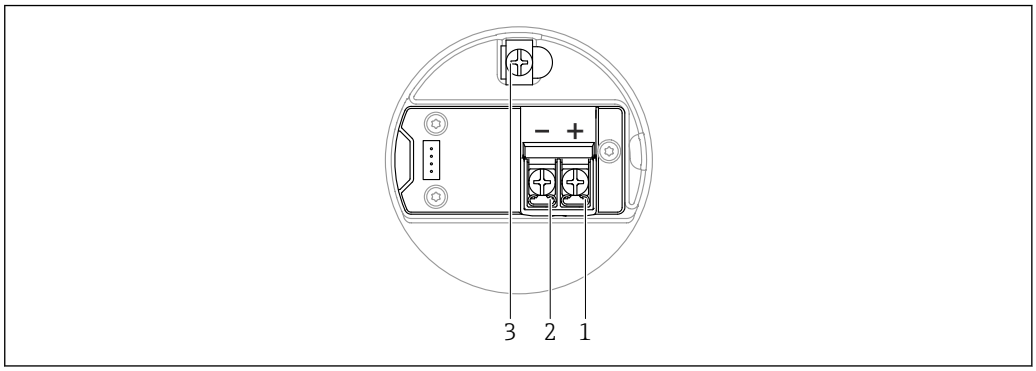

A0045842

18 Connection terminals and ground terminal in the connection compartment, dual-compartment housing, L-form

1 *Plus terminal*
2 *Minus terminal*
3 *Internal ground terminal*

6.2.7 Cable entries

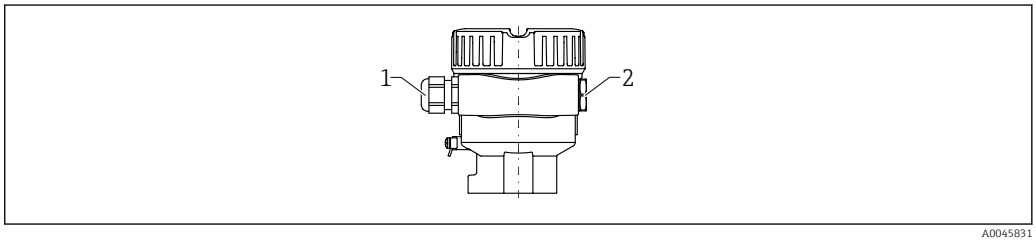

A0045831

19 Example

1 *Cable entry*
2 *Blind plug*

The type of cable entry depends on the device version ordered.

6.2.8 Available device plugs

In the case of devices with a plug, it is not necessary to open the housing for connection purposes.

Use the enclosed seals to prevent the penetration of moisture into the device.

Various M12 sockets are available as accessories for devices with M12 plugs.

For more details, see the "Accessories" section.

M12 plug

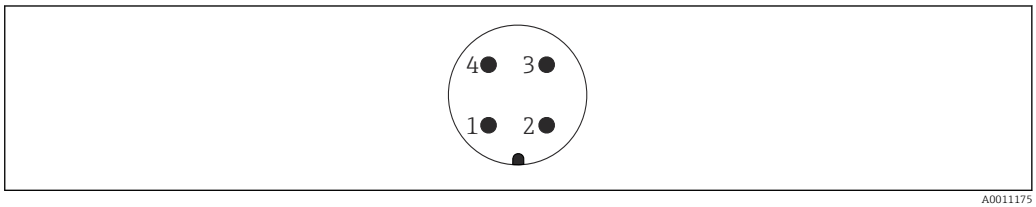

A0011175

20 View of the connection on the device

1 *APL signal -*
2 *Ethernet-APL signal +*
3 *Shielding*
4 *Not used*

6.3 Ensuring the degree of protection

6.3.1 Degree of protection

Testing according to IEC 60529 and NEMA 250

IP68 test condition: 1.83 m H_2O for 24 h

Housing
See cable entries

Cable entries
- M20 coupling, plastic, IP66/68 NEMA Type 4X/6P
- M20 coupling, nickel-plated brass, IP66/68 NEMA Type 4X/6P
- M20 coupling, 316L, IP66/68 NEMA Type 4X/6P
- M20 thread, IP66/68 NEMA Type 4X/6P
- G ½ thread, NPT ½ , IP66/68 NEMA Type 4X/6P

Degree of protection for M12 plug
- When housing is closed and connecting cable is plugged in: IP66/67 NEMA Type 4X
- When housing is open or connecting cable is not plugged in: IP20, NEMA Type 1

NOTICE
M12 plug: Loss of IP protection class due to incorrect installation!
- ▶ The degree of protection only applies if the connecting cable used is plugged in and screwed tight.
- ▶ The degree of protection only applies if the connecting cable used is specified according to IP67 NEMA Type 4X.

If the "M12 plug" option is selected as the electrical connection, **IP66/67 NEMA Type 4X** applies for all housing types.

6.4 Post-connection check

- ❑ Are the device or cables undamaged (visual inspection)?
- ❑ Do the cables used comply with the requirements?
- ❑ Do the mounted cables have strain relief?
- ❑ Cable glands mounted, securely tightened and leak-tight?
- ❑ Does the supply voltage correspond to the specifications on the nameplate?
- ❑ No reverse polarity, terminal assignment correct?
- ❑ Are all the housing covers properly installed and tightened?
- ❑Optional: Is the cover tightened with a securing screw?

7 Operation options

7.1 Overview of operation options

- Operation via operating key and DIP switches on the electronic insert
- Operation via optical operating keys on the device display (optional)
- Operation via Bluetooth® wireless technology (with optional device display, including Bluetooth® wireless technology) with SmartBlue app, Field Xpert or DeviceCare
- Operation via web server
- Operation via operating tool (Endress+Hauser FieldCare/DeviceCare) or FDI Hosts (e.g., PDM)

7.2 Electronic insert (FEL60P) - Ethernet-APL

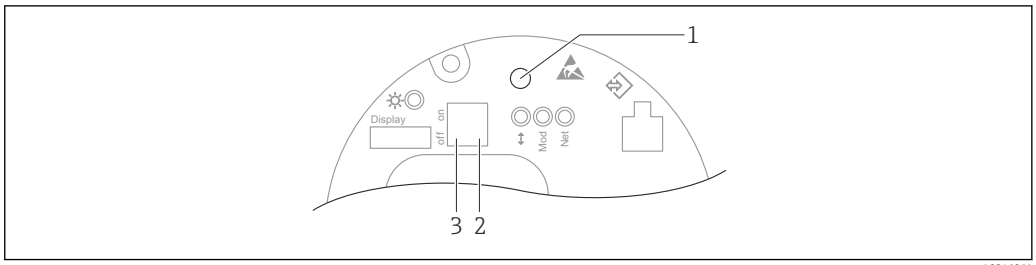

21 Operating key and DIP switches on the electronic insert (FEL60P) - Ethernet-APL

1 Operating key for Reset password and Reset device
2 DIP switch for setting the service IP address
3 DIP switch for locking and unlocking the device

The setting of the DIP switches on the electronic insert has priority over the settings made via other operation methods (e.g. FieldCare/DeviceCare).

7.3 Structure and function of the operating menu

The differences between the structure of the operating menus of the local display and the Endress+Hauser FieldCare or DeviceCare operating tools can be summarized as follows:

The local display is suitable for configuring simple applications.

The operating tools (FieldCare, DeviceCare, SmartBlue, AMS, PDM, etc.) can be used to configure the parameters of wide-ranging applications.

More elaborate applications can be configured with the Web server.

Wizards help the user to commission the various applications. The user is guided through the individual configuration steps.

7.3.1 User roles and related access authorization

The two user roles **Operator** and **Maintenance** (as-delivered state) have different write access to the parameters if a device-specific access code has been defined. This access code protects the device configuration from unauthorized access.

If an incorrect access code is entered, the user obtains the access rights of the **Operator** role.

7.4 Access to operating menu via onsite display

7.4.1 Device display (optional)

Possible to operate the optical operating keys through the cover. No need to open the device.

Functions:
- Display measured values and fault and notice messages
- Background lighting, which switches from green to red in the event of an error
- The device display can be removed for easier operation

Backlighting is switched on or off depending on the supply voltage and the current consumption.

The device display is optionally available with Bluetooth® wireless technology.

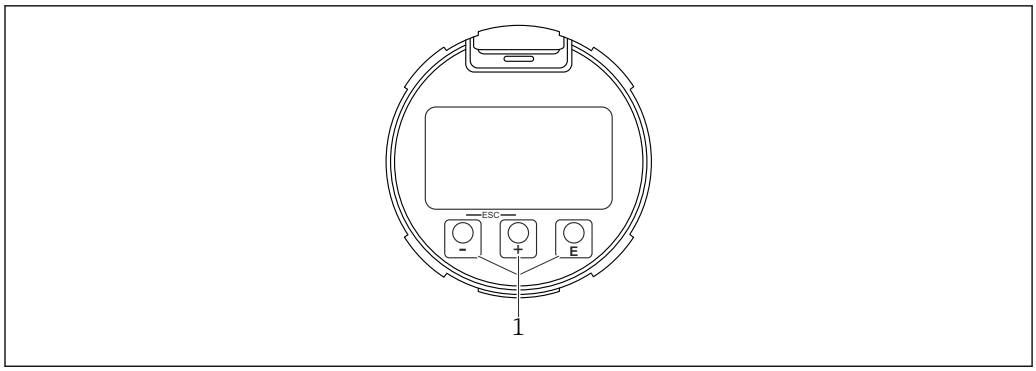

22 *Graphic display with optical operating keys (1)*

- ⊞ key
  - Navigate downwards in the selection list
  - Edit the numerical values and characters within a function
- ⊟ key
  - Navigate upwards in the selection list
  - Edit the numerical values and characters within a function
- Ⓔ key
  - Change from main display to main menu
  - Confirm entry
  - Jump to the next item
  - Selection of a menu item and activation of edit mode
  - Unlock/lock the display operation
  - Press and hold the Ⓔ key to display a short description of the selected parameter (if available)
- ⊞ key and ⊟ key (ESC function)
  - Exit edit mode for a parameter without saving the changed value
  - Menu at a selection level: pressing the keys simultaneously takes the user back up a level in the menu
  - Press and hold the keys simultaneously to return to the upper level

7.4.2 Operation via Bluetooth® wireless technology (optional)

Prerequisite
- Device with device display including Bluetooth® wireless technology
- Smartphone or tablet with Endress+Hauser SmartBlue app or PC with DeviceCare from version 1.07.05 or Field Xpert SMT70

The connection has a range of up to 25 m (82 ft). The range can vary depending on environmental conditions such as attachments, walls or ceilings.

The operating keys on the display are locked as soon as a Bluetooth® connection is established.

An available Bluetooth® connection is indicated by a flashing Bluetooth symbol.

If the Bluetooth® display is removed from one device and installed in another device.
- All login data are stored only in the Bluetooth® display and not in the device.
- The password changed by the user is also stored in the Bluetooth® display.

Special Documentation SD02530P

Operation via SmartBlue app

The device can be operated and configured with the SmartBlue App.

- The SmartBlue app must be downloaded onto a mobile device for this purpose
- For information on the compatibility of the SmartBlue app with mobile devices, see **Apple App Store (iOS devices)** or **Google Play Store (Android devices)**
- Incorrect operation by unauthorized persons is prevented by means of encrypted communication and password encryption.
- The Bluetooth® function can be deactivated after initial device setup.

A0033202

23 QR code for free Endress+Hauser SmartBlue App

Download and installation:

1. Scan the QR code or enter **SmartBlue** in the search field of the Apple App Store (iOS) or Google Play Store (Android).
2. Install and start the SmartBlue app.
3. For Android devices: enable location tracking (GPS) (not required for iOS devices).
4. Select a device that is ready to receive from the device list displayed.

Login:

1. Enter the user name: admin
2. Enter the initial password: serial number of the device
3. Change the password after logging in for the first time

Information on password and reset code

For devices that meet the requirements of IEC 62443-4-1 "Secure product developement lifecycle management" ("ProtectBlue"):
- If the user-defined password is lost: refer to the user management instructions and the reset button in the operating manual.
- Refer to the associated Security Manual (SD).

For all other devices (without "ProtectBlue"):
- If the user-defined password is lost, access can be restored via a reset code. The reset code is the serial number of the device in reverse. The original password is once again valid after the reset code has been entered.
- The reset code can also be changed in addition to the password.
- If the user-defined reset code is lost, the password can no longer be reset via the SmartBlue app. Contact Endress+Hauser Service in this case.

7.5 Access to the operating menu via the web browser

7.5.1 Function scope

Thanks to the integrated Web server the device can be operated and configured via a Web browser. The structure of the operating menu is the same as for the local display. In addition to the measured values, device status information is also displayed and allows users to monitor the status of the device. Furthermore the device data can be managed and the network parameters can be configured.

7.5.2 Requirements

Computer software

Recommended operating systems

- Microsoft Windows 7 or higher.
- Mobile operating systems:
  - iOS
  - Android

Microsoft Windows XP is supported.

Web browsers supported

Currently available web browsers:
- Microsoft Edge
- Mozilla Firefox
- Google Chrome
- Safari

Computer settings

User rights

Corresponding user rights (e.g. administrator rights) for TCP/IP and proxy server settings are required (for changing the IP address, subnet mask etc.).

Proxy server settings of the web browser

The web browser *Use proxy server for LAN* setting must be **disabled**.

JavaScript

JavaScript must be enabled.

When installing a new firmware version: To enable correct data display, clear the temporary memory (cache) of the web browser under **Internet options**.

7.5.3 Establishing a connection

Via PROFINET over Ethernet-APL network

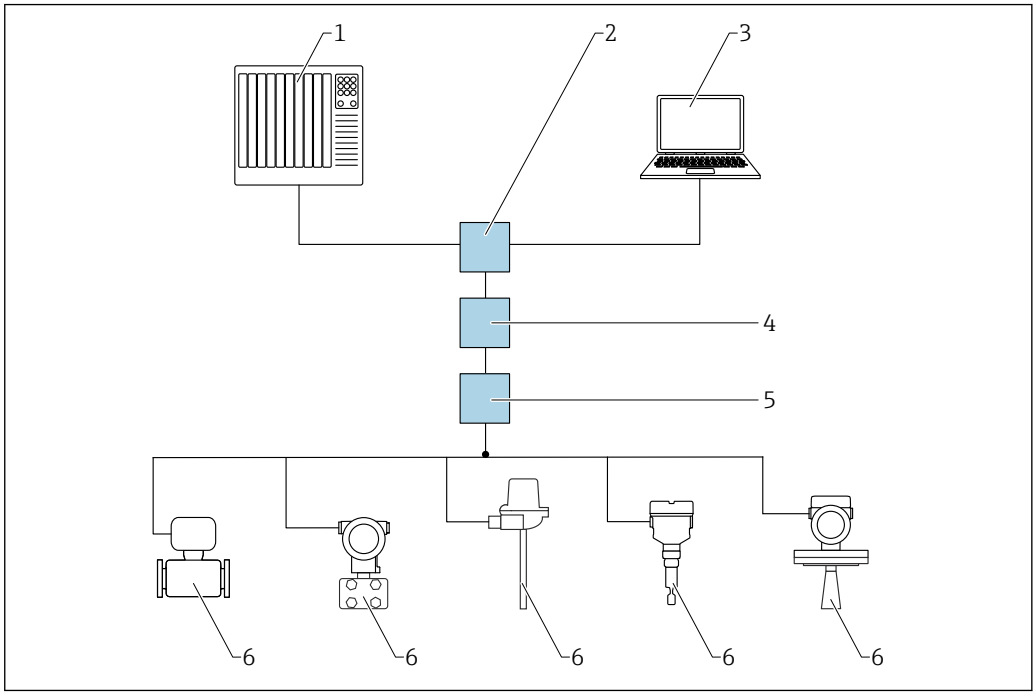

24 *Options for remote operation via PROFINET over Ethernet-APL network: star topology*

1 *Automation system, e.g. Simatic S7 (Siemens)*
2 *Ethernet switch*
3 *Computer with web browser (e.g., Microsoft Edge) for accessing the integrated device web server or computer with operating tool (e.g. FieldCare, DeviceCare, SIMATIC PDM) with iDTM PROFINET Communication*
4 *APL power switch (optional)*
5 *APL field switch*
6 *APL field device*

Call up the website via the computer in the network. The IP address of the device must be known.

The IP address can be assigned to the device in a variety of ways:
- Dynamic Configuration Protocol (DCP), factory setting
  The IP address is automatically assigned to the device by the automation system (e.g. Siemens S7)
- Software addressing
  The IP address is entered via the **IP address** parameter
- DIP switch for service
  The device then has the fixed assigned IP address IP address 192.168.1.212
  ℹ The IP address is only adopted after a restart.
  The IP address can now be used to establish the network connection

The default setting is that the device uses the Dynamic Configuration Protocol (DCP). The device's IP address is automatically assigned by the automation system (e.g. Siemens S7).

Starting the Web browser and logging in

1. Start the web browser on the computer.
2. Enter the device's IP address in the address line of the web browser.
   ↳ The login page appears.

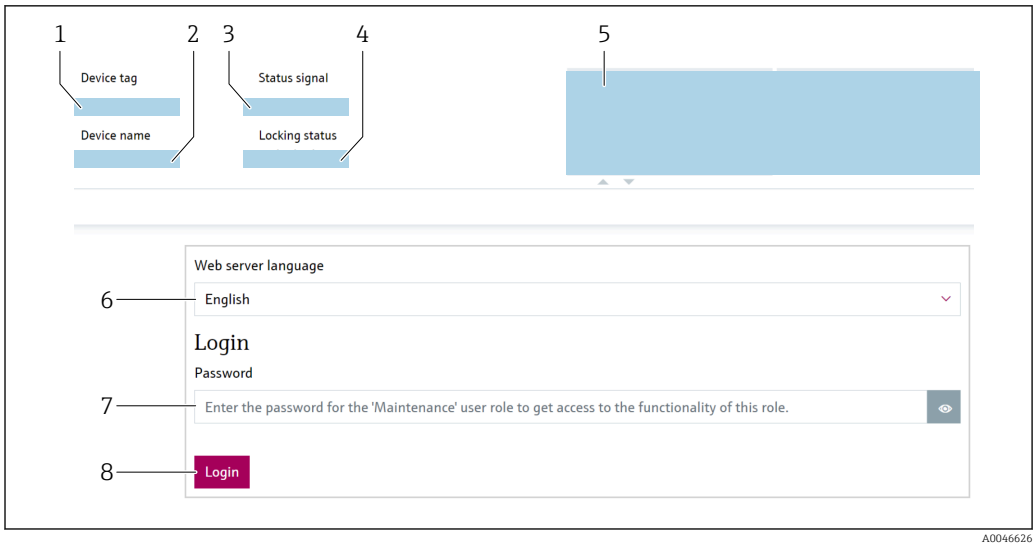

25 *Web browser login*

1 *Device tag*
2 *Device name*
3 *Status signal*
4 *Locking status*
5 *Current measured values*
6 *Select the language*
7 *Enter the "Password" parameter*
8 *Login*

1. Select the preferred **Language** parameter for the web browser.
2. Enter the **Password** parameter (factory setting 0000).
3. Confirm entry with Login.

7.5.4 Operator interface

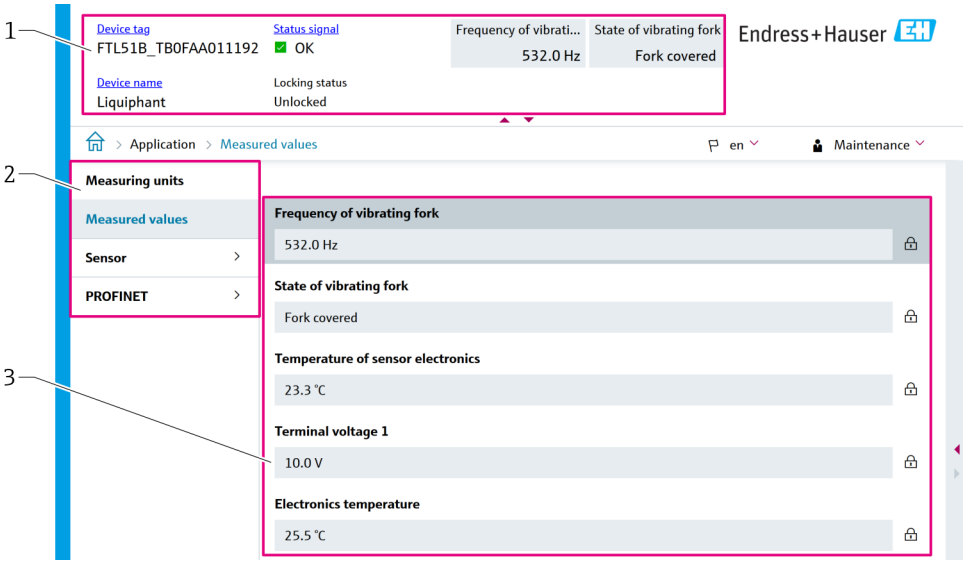

26 *User interface with sample contents*

1 *System header*
2 *Navigation area*
3 *Work area*

System header

The following information appears in the header:
- Device tag
- Device name
- Status signal
- Locking status
- Current measured values

Navigation area

If a function is selected in the function bar, the submenus of the function open in the navigation area. The user can now navigate within the menu structure.

Work area

Depending on the selected function and the related submenus, various actions can be performed in this area:
- Configuring parameters
- Reading measured values
- Calling up help texts

Adopting a value

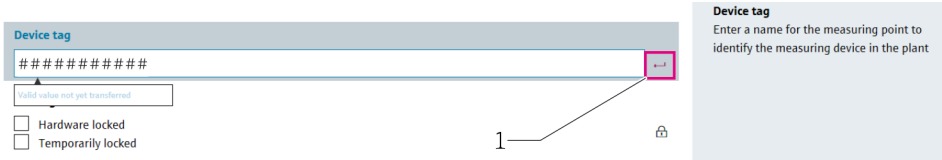

27 Example of Enter button

1 Enter button in the operating tool

The value entered is only adopted by pressing the Enter key or clicking on the Enter button (1).

7.5.5 Disabling the Web server

The web server of the device can be switched on and off as required using the **Web server functionality** parameter.

Navigation

"System" menu → Connectivity → Interfaces

Parameter overview with brief description

Parameter	Description	Selection
Web server functionality	Switch web server on and off, switch off HTML.	▪ Disable ▪ Enable

Function range of "Web server functionality" parameter

Option	Description
Disable	▪ The web server is completely disabled. ▪ Port 80 is locked.
Enable	▪ The complete web server functionality is available. ▪ JavaScript is used. ▪ The password is transferred in an encrypted state. ▪ Any change to the password is also transferred in an encrypted state.

Enabling the web server

If the web server is disabled, it can only be re-enabled with the **Web server functionality** parameter via the following operating options:
- Via local display
- Via the "FieldCare" operating tool
- Via the "DeviceCare" operating tool
- Via FDI hosts
- Via the PROFINET startup record

7.5.6 Logging out

1. Select the **Logout** entry in the function bar.
   ↳ The home page with the Login box appears.
2. Close the Web browser.

Once communication with the Web server is established via the standard IP address 192.168.1.212, the DIP switch must be reset (from **ON** → **OFF**). Following a reboot, the configured IP address of the device is once again active for network communication.

7.6 Access to the operating menu via the operating tool

The structure of the operating menu in the operating tools is the same as for operation via the local display. The range of functions is different however.

7.6.1 Connecting the operating tool

Via PROFINET over Ethernet-APL network

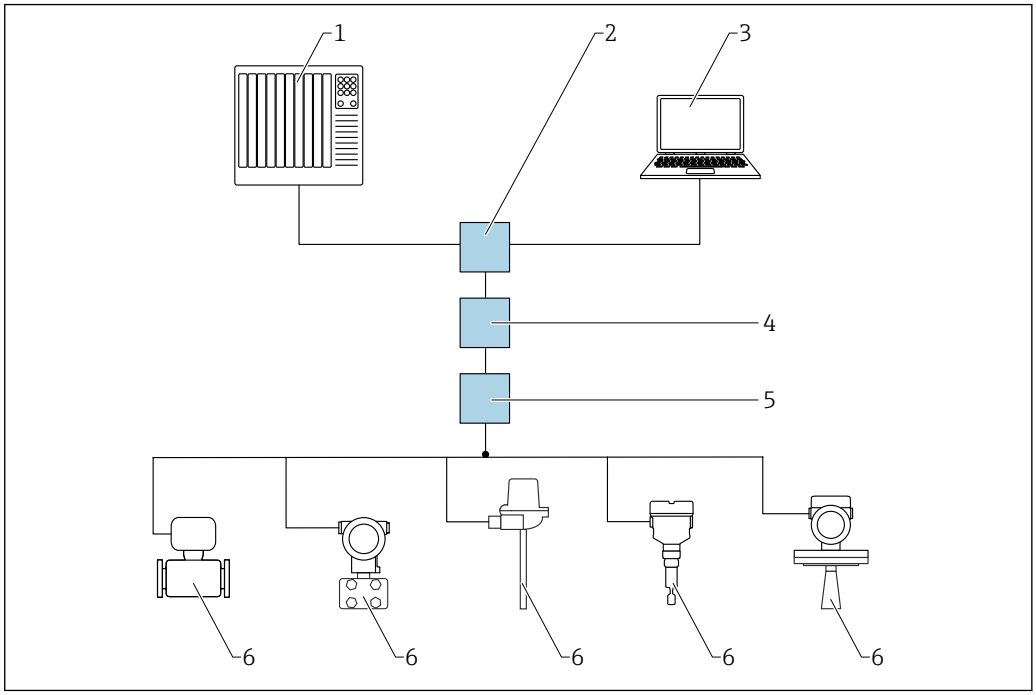

28 Options for remote operation via PROFINET over Ethernet-APL network: star topology

1 *Automation system, e.g. Simatic S7 (Siemens)*
2 *Ethernet switch*
3 *Computer with web browser (e.g., Microsoft Edge) for accessing the integrated device web server or computer with operating tool (e.g. FieldCare, DeviceCare, SIMATIC PDM) with iDTM PROFINET Communication*
4 *APL power switch (optional)*
5 *APL field switch*
6 *APL field device*

Call up the website via the computer in the network. The IP address of the device must be known.

The IP address can be assigned to the device in a variety of ways:
- Dynamic Configuration Protocol (DCP), factory setting
  The IP address is automatically assigned to the device by the automation system (e.g. Siemens S7)
- Software addressing
  The IP address is entered via the **IP address** parameter
- DIP switch for service
  The device then has the fixed assigned IP address IP address 192.168.1.212
  ℹ The IP address is only adopted after a restart.
  The IP address can now be used to establish the network connection

The default setting is that the device uses the Dynamic Configuration Protocol (DCP). The device's IP address is automatically assigned by the automation system (e.g. Siemens S7).

Via service interface (CDI)

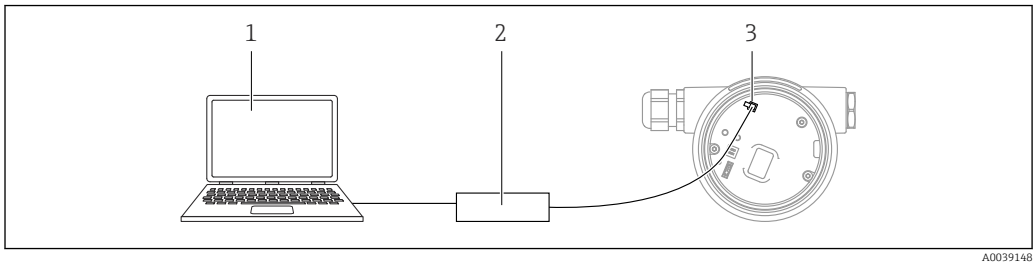

1 Computer with FieldCare/DeviceCare operating tool
2 Commubox
3 Service interface (CDI) of the device (= Endress+Hauser Common Data Interface)

7.7 FieldCare

7.7.1 Function range

FDT-based plant asset management tool from Endress+Hauser. FieldCare can configure all smart field devices in a system and helps you manage them. By using the status information, FieldCare is also a simple but effective way of checking their status and condition.

Access is via:
- CDI service interface
- PROFINET interface

Typical functions:
- Configuration of transmitter parameters
- Loading and saving of device data (upload/download)
- Documentation of the measuring point
- Visualization of the measured value memory (line recorder) and event logbook

For additional information about FieldCare, see Operating Instructions BA00027S and BA00059S

7.8 DeviceCare

7.8.1 Function scope

Tool for connecting and configuring Endress+Hauser field devices.

The fastest way to configure Endress+Hauser field devices is with the dedicated "DeviceCare" tool. Together with the device type managers (DTMs), DeviceCare presents a convenient, comprehensive solution.

For details, see Innovation Brochure IN01047S

7.9 HistoROM data management

When replacing the electronic insert, the stored data is transferred by reconnecting the HistoROM.

The device serial number is saved in the HistoROM. The electronics serial number is saved in the electronics.

8 System integration

8.1 Overview of device description files

8.1.1 Current version data for the device

Firmware version	01.00.zz	▪ On the title page of the manual ▪ On the transmitter nameplate ▪ System → Information → Firmware version
Firmware version parameter release date	10.2025	–
Manufacturer ID	0x0011	Guidance → Commissioning → Device identification → Manufacturer ID
Device ID	0xA1C4	Guidance → Commissioning → Device identification → Device ID On the transmitter nameplate
Profile 4 device ID	0xB360	On the transmitter nameplate
Device revision	1	On the transmitter nameplate
PROFINET version	2.4x	–
PA profile version	4.0x	Application → PROFINET → Information → PA profile version

8.1.2 Operating tools

The suitable device description file for the individual operating tools is listed in the table below, along with information on where the file can be acquired.

Operating tool via Service interface (CDI)	Sources for obtaining device descriptions
FieldCare	▪ www.endress.com → Downloads area ▪ CD-ROM (contact Endress+Hauser) ▪ DVD (contact Endress+Hauser)
DeviceCare	▪ www.endress.com → Downloads area ▪ CD-ROM (contact Endress+Hauser) ▪ DVD (contact Endress+Hauser)
SMT70	Use update function of handheld terminal
AMS Device Manager (Emerson Process Management)	www.endress.com → Downloads area
SIMATIC PDM (Siemens)	www.endress.com → Downloads area

8.2 Device master file (GSD)

In order to integrate field devices into a bus system, the PROFINET over Ethernet-APL system needs a description of the device parameters, such as output data, input data, data format and data volume.

These data are available in the device master file (GSD) which is provided to the automation system when the communication system is commissioned. In addition device bit maps, which appear as icons in the network structure, can also be integrated.

The device master file (GSD) is in XML format, and the file is created in the GSDML description markup language.

Downloading the device master file (GSD)
- Via Web server: Menu path System → Device drivers
- Via www.endress.com/download

8.2.1 File name of the device master file (GSD)

Example of the name of a device master file:

GSDML-V2.45-EH-Liquiphant-20250613.xml

GSDML	Description language
V2.45	Version of the PROFINET specification
EH	Endress+Hauser
Liquiphant	Instrument family
20250613	Date of issue (year, month, day)
.xml	File name extension (XML file)

8.3 Cyclic data transmission

8.3.1 Overview of the modules

The following graphic shows which modules are available to the device for cyclic data exchange with the manufacturer-specific GSD. Cyclic data exchange is performed with an automation system.

Navigation: Application → PROFINET

The "PROFILE GSD" column indicates the available slots for a generic profile (PA 4.02 Profile Discrete Input).

Device				
Module	**Slot**	**PROFILE GSD**	**Direction Data flow**	**Control system**
Discrete input(switch status of the vibrating fork)	1	✔	→	**PROFINET**
Analog input (Frequency of vibrating fork)	20		→	
Analog input (Sensor temperature)	21		→	
Analog input Electronics temperature	22		→	
Binary input (Heartbeat Technology)	80		→	
Binary input (sensor diagnosis)	81		→	
Binary output (Heartbeat Technology)	210		←	

8.3.2 Description of the modules

The data structure is described from the perspective of the automation system:
- Input data: are sent from the device to the automation system
- Output data: are sent from the automation system to the device

Module: Discrete input

The Discrete input module can cyclically transmit a single discrete value including status from the device to the automation system.

Discrete input(switch status of the vibrating fork)

Bit	Function	Description
0	**Process value** parameter	The process value is the switch status of the vibrating fork. Vibrating fork covered → 1 Vibrating fork free → 0

Module: Analog input

Transmission of input variables from the device to the automation system:

Analog input modules cyclically transmit the selected input variables, including the status, from the device to the automation system. The input variable is depicted in the first four bytes in the form of a floating point number as per the IEEE 754 standard. The fifth byte contains status information pertaining to the input variable.

Module: Binary output

The Binary output module can cyclically receive discrete output values from the automation system. The device implements an 8-bit type as described in PA PROFILE 4.0x. One of these bits is used to signal to the device that the Heartbeat Verification is to be started.

Bit	Function	Description
0	Start verification	Start verification
1...7	-	-

Module: Binary input

The Binary input module can cyclically send discrete values from the device to the automation system. The status of the Heartbeat Verification is transmitted for the device:

Module: Binary input Heartbeat Technology slot 80

Bit	Function	Description
0	**Status** parameter **Not done** option	Verification not carried out
1	**Status** parameter **Failed** option	The device has not passed the verification. At least one test group was out of specification.
2	**Status** parameter **Busy** option	Verification in progress
3	**Status** parameter **Done** option	Verification carried out
4	**Verification result** parameter **Failed** option	The device has not passed the verification. At least one test group is out of specification.
5	**Verification result** parameter **Passed** option	The device has passed the verification. All of the verified test groups corresponded to the specifications.
6	**Verification result** parameter **Not done** option	Verification not carried out
7	-	-

Module: Binary input sensor diagnosis slot 81

Bit	Function	Description
0	Process alarm **Fork frequency** option MAX	Process alarm: frequency of vibrating fork too high
1	Process alarm **Fork frequency** option MIN	Process alarm: frequency of vibrating fork too low
2	Process alarm **Sensor temperature** option	Process alarm: sensor temperature detected
3	Process alarm: corrosion	Process alarm: corroded sensor detected
4	-	-
5	-	-
6	-	-
7	-	-

8.3.3 Status coding

Status	Coding (hex)	Meaning
BAD - Maintenance alarm	0x24	No measured value available, as a device error has occurred.
BAD - Process related	0x28	No measured value available, as the process conditions are not within the device's technical specification limits.
BAD - Function check	0x3C	A function check is active (e.g. cleaning or calibration)
UNCERTAIN - Initial value	0x4F	A predefined value is output until a correct measured value is available again or remedial actions have been performed that change this status.
UNCERTAIN - Maintenance demanded	0x68	Wear and tear has been detected. Maintenance is needed shortly to ensure the device remains operational. The measured value might be invalid. The use of the measured value depends on the application.
UNCERTAIN - Process related	0x78	The process conditions are not within the device's technical specification limits. This could have a negative impact on the quality and accuracy of the measured value. The use of the measured value depends on the application.
GOOD - OK	0x80	No error has been diagnosed.
GOOD - Maintenance demanded	0xA8	The measured value is valid. It is highly advisable to service the device in the near future.
GOOD - Function check	0xBC	The measured value is valid. The device performs an internal function check. The function check does not have any noticeable effect on the process.

8.3.4 Startup configuration

Startup configuration (NSU)	The automation system adopts the configuration of the most important parameters of the device.
	▪ Interfaces:
	  ▪ Display operation
	  ▪ Web server functionality
	  ▪ Bluetooth activation
	  ▪ Service (UART-CDI)
	▪ Units:
	  Temperature unit
	▪ Application:
	  ▪ Density setting
	  ▪ Switching delay uncovered to covered
	  ▪ Switching delay covered to uncovered
	▪ Diagnostic settings:
	  ▪ 0 to 1 Diagnostic behavior for various diagnostic indications (Warning/Logbook entry only):
	  ▪ Sensor corroded
	  ▪ Process alert frequency too low (optional for Heartbeat Verification)
	  ▪ Process alert frequency too high (optional for Heartbeat Verification)
	  ▪ Sensor temperature out of range
	  ▪ Electronics temperature out of range
	  ▪ Date/time incorrect
	▪ Analog input:
	  Damping

8.4 System redundancy S2

A redundant layout with two automation systems is necessary for processes that are in continuous operation. If one system fails the second system guarantees continued, uninterrupted operation. The device supports S2 system redundancy and can communicate simultaneously with both automation systems.

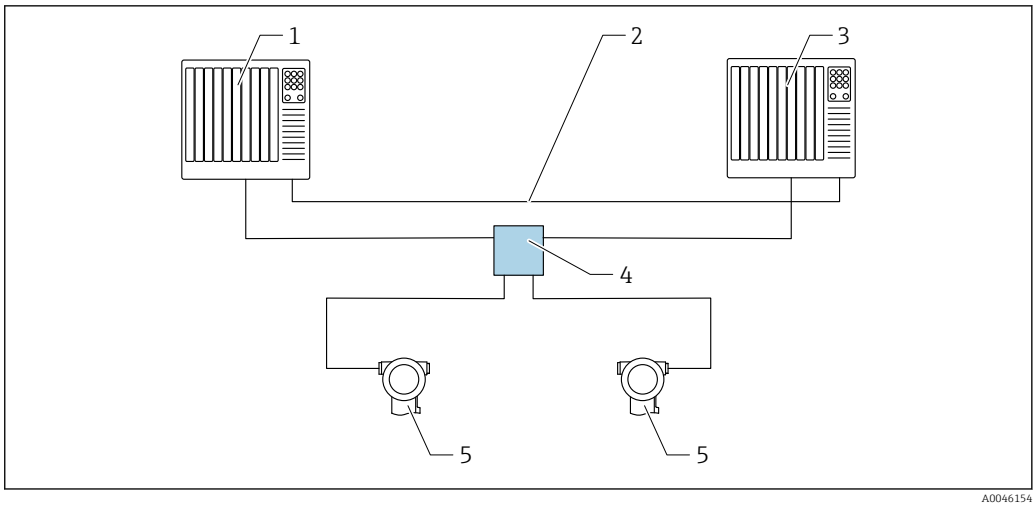

29 *Example of the layout of a redundant system (S2): star topology*

1 *Automation system 1*
2 *Synchronization of automation systems*
3 *Automation system 2*
4 *APL field switch*
5 *Device*

All the devices in the network must support S2 system redundancy.

9 Commissioning

NOTICE

Do not check correct functioning of the tuning fork by hand.
The coating of the tuning fork may become damaged and impair correct functioning.
▶ Immerse the tuning fork in a container with liquid, e.g. in water.

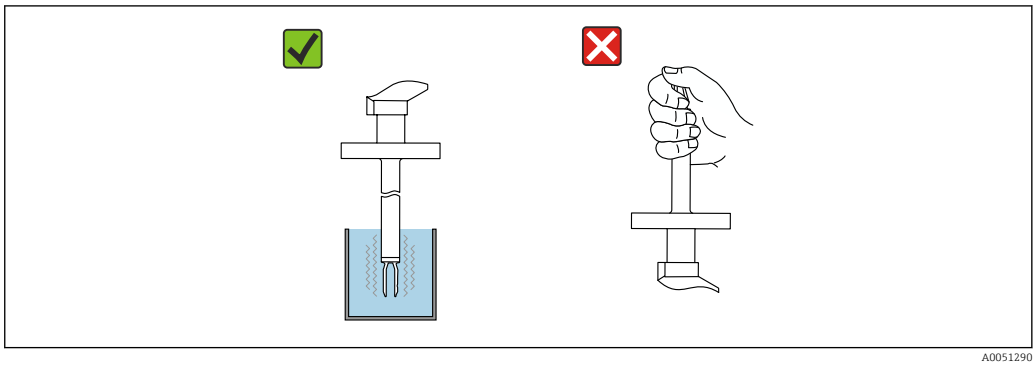

30 *Functional test of the tuning fork*

All configuration tools provide a commissioning assistant that supports the user when setting the most important configuration parameters (**Guidance** menu **Commissioning** wizard).

9.1 Preliminaries

The measuring range and the unit in which the measured value is transmitted correspond to the data on the nameplate.

9.2 Post-installation and function check

Before commissioning the measuring point, check whether the post-installation and post-connection checks have been performed.

Post-mounting check

Post-connection check

9.3 Establishing a connection via FieldCare and DeviceCare

9.3.1 Via PROFINET protocol

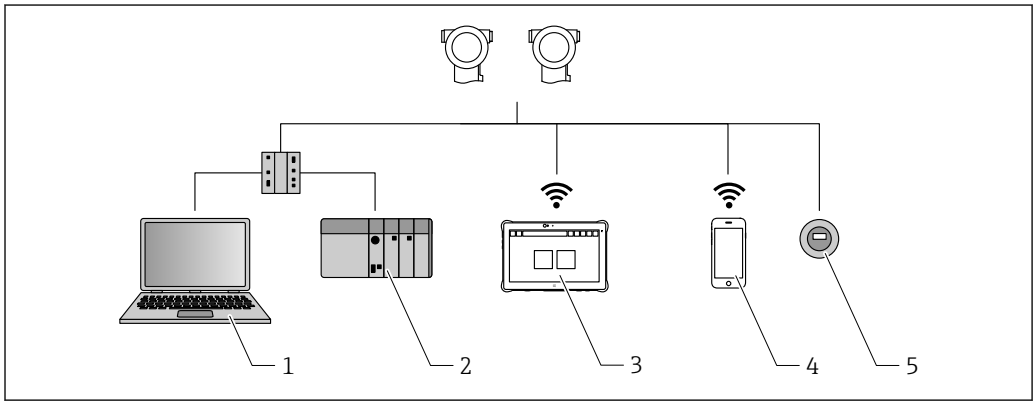

31 Options for remote operation via PROFINET protocol

1 *Computer with web browser or with operating tool (e.g., DeviceCare)*
2 *Automation system*
3 *Field Xpert SMT70*
4 *Mobile handheld terminal*
5 *Local operation via display module*

9.3.2 Via service interface (CDI)

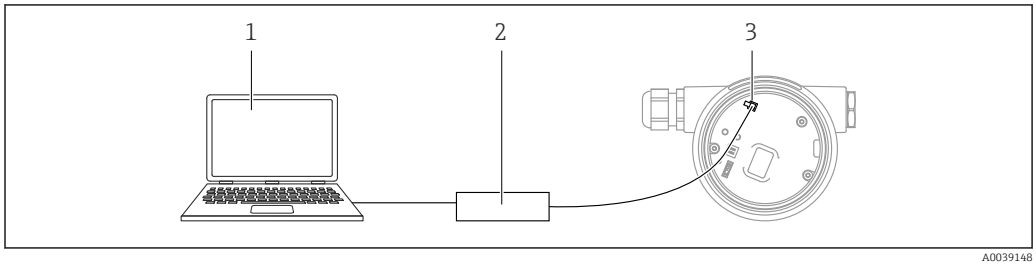

1 *Computer with FieldCare/DeviceCare operating tool*
2 *Commubox*
3 *Service interface (CDI) of the device (= Endress+Hauser Common Data Interface)*

9.4 Hardware settings

9.4.1 Activating the default IP address

Activating the default IP address via the DIP switch

The device can be set to the default IP address 192.168.1.212 via DIP switches.

1. Set DIP switch 2 on the electronic insert from **OFF** → **ON**.
2. Reconnect the device to the power supply.
   ↳ The default IP address is used once the device is restarted.

9.5 Setting the device name

A measuring point can be quickly identified within a plant on the basis of the **Device tag** parameter and **PROFINET device name** parameter. The **Device tag** parameter, which is specified ex works or defined when ordering, can be changed in the operating menu.

9.5.1 Configuring the "Device tag" parameter via the operating menu

The **Device tag** parameter can be adapted via the operating menu or automation system.

Navigation: System → Device management

9.5.2 Configuring the "PROFINET device name" parameter via the operating menu

Navigation: Application → PROFINET → Configuration

9.5.3 Configuring the "PROFINET device name" parameter via the automation system

The **PROFINET device name** parameter can be adapted individually via the automation system.

When assigning the **PROFINET device name** parameter via the automation system: assign the device name in lower case letters.

9.6 Configuring communication parameters via software

- IP address
- Subnet mask
- Default gateway

Navigation: System → Connectivity → Ethernet

9.7 Configuring the operating language

9.7.1 Local display

Configuring the language of the local display

1. Press the E key for at least 2 s.
   ↳ A dialog box appears.
2. Unlock the display operation.
3. Select the **Language** parameter in the main menu.
4. Press the E key.
5. Select the desired language with the + key.

6. Press the E key.

Display operation locks automatically (except in the **Safety mode** wizard):
- after 1 min on the main page if no key has been pressed
- after 10 min within the operating menu if no key has been pressed

9.7.2 Operating tool

Set display language

Navigation: System → Display → Language

Selection in **Language** parameter; Visibility depends on order options or device settings

9.7.3 Web server

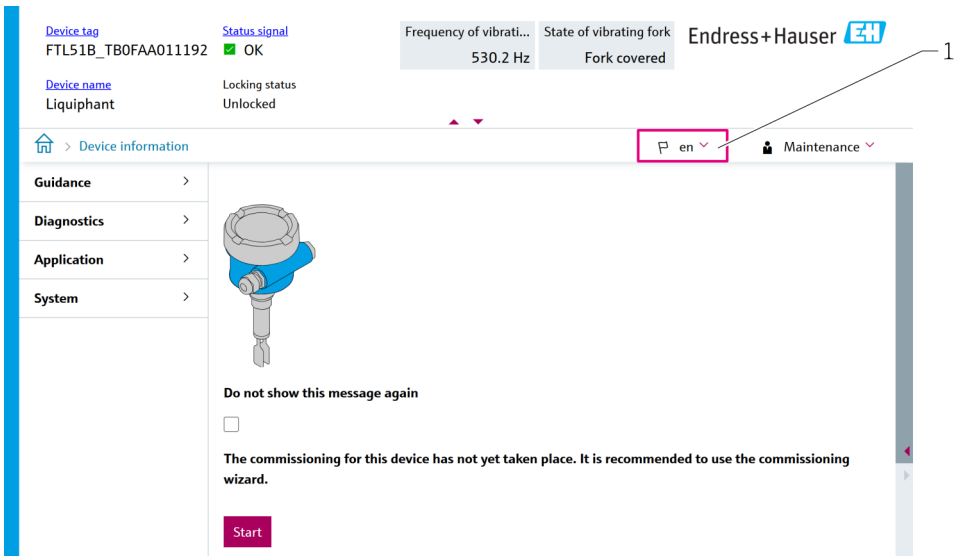

1 Language setting

9.8 Configuring the device

9.8.1 Commissioning with "Commissioning" wizard

In the web server, SmartBlue and on the display, the **Commissioning** wizard is available to guide the user through the initial commissioning steps.

1. Connect the device to the Web server.
2. Open the device in the Web server.
   ↳ The dashboard (homepage) of the device is displayed:
3. In the **Guidance** menu, click the **Commissioning** wizard to open the wizard.
4. Enter the appropriate value in each parameter or select the appropriate option. These values are written directly to the device.
5. Click "Next" to go to the next page.
6. Once all the pages have been completed, click "End" to close the **Commissioning** wizard.

9.9 Protecting settings from unauthorized access

9.9.1 Hardware locking or unlocking

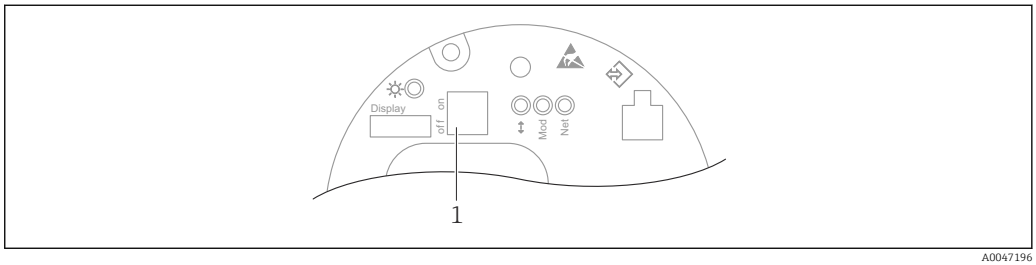

1 DIP switch for locking and unlocking the device

The DIP switch 1 on the electronic insert is used to lock or unlock the device:
- If operation is locked via the DIP switch, the key symbol appears on the local display. Unlocking can only be performed using the DIP switch.
- If operation is locked via the operating menu, you can only unlock operation again via the operating menu.

9.9.2 Software locking or unlocking

If operation is locked via the DIP switch, you can only unlock operation again via the DIP switch.

Locking via password in display / FieldCare / DeviceCare / SmartBlue / web server

Access to parameter configuration of the device can be locked by assigning a password. When the device is delivered from the factory, the user role is set to **Maintenance** option. The device parameters can be fully configured with the **Maintenance** option user role. Afterwards, access to the configuration can be locked by assigning a password. The **Maintenance** option switches to the **Operator** option as a result of this locking. The configuration can be accessed by entering the password.

The password is assigned under: **System** menu **User management** submenu

The user role is changed from the **Maintenance** option to **Operator** option under:

Navigation: System → User management

Disabling the lock via the display / FieldCare / DeviceCare / SmartBlue / web server

After entering the password, you can enable parameter configuration of the device as an **Operator** option with the password. The user role then changes to **Maintenance** option.

If necessary, the password can be deleted under User management:

Navigation: System → User management

9.9.3 Display operation - locking or unlocking

The E key must be pressed for at least 2 seconds in order to lock or unlock the optical keys. Display operation can be locked or unlocked in the dialog that appears.

Display operation locks automatically:
- After 1 minute on the main page if no key has been pressed
- After 10 minutes within the operating menu if no key has been pressed

Display operation can be disabled via software:

Navigation: System → Connectivity → Interfaces → Display operation

9.10 Storing the oscillation frequencies

Two frequencies (uncovered/covered) can be stored in the device so that the current oscillation frequency can be compared later on to the condition at the time of commissioning.

The frequencies can only be stored in the respective fork state. For example, if the fork is covered it is only possible to save the frequency when the fork is covered (**Stored covered frequency** parameter).

The value is saved via the **Commissioning** wizard or in the operating menu:

Navigation: Application → Sensor → Stored frequency

9.11 Simulation

The following options can be simulated in the **Simulation** submenu:
- State of vibrating fork (uncovered/covered)
- Sensor frequency
- Current output
- Diagnostic event simulation

Navigation: Diagnostics → Simulation → Simulation

10 Operation

10.1 Reading the device locking status

Displaying active write protection:
- In the **Locking status** parameter
  Menu path of local display: at the top operating level
  Menu path of operating tool: System → Device management
- In the operating tool (FieldCare/DeviceCare) in the DTM header
- In the Web server in the DTM header

10.2 Reading off measured values

All the measured values can be read off using the **Measured values** submenu.

Navigation: **Application** menu → **Measured values** submenu

10.3 Adapting the device to process conditions

The following menus are available for this purpose:
- Basic settings in the **Guidance** menu
- Advanced settings in:
  - **Diagnostics** menu
  - **Application** menu
  - **System** menu

For details, see the "Description of device parameters" documentation.

10.4 Heartbeat Technology (optional)

Heartbeat Technology comprises 3 modules. These three modules combined check, evaluate and monitor device functionality and process conditions.

10.4.1 "Heartbeat Verification" wizard

The wizard guides the user through the entire process for creating the verification report. It can be used via the following operating tools:
- SmartBlue app
- DTM
- Display [1)]

Information contained in the verification report:
- Operating hours counter
- Temperature and frequency peak hold indicator
- Oscillation frequency in delivery state (in air) as reference value
- Oscillation frequency:
  - Increased oscillation frequency → indication of corrosion
  - Reduced oscillation frequency → indication of buildup or covered sensor
    Deviations may be influenced by the process temperature or process pressure.
- Frequency history:
  Storage of the last 16 sensor frequencies at the time of verification

Perform verification via one of the following interfaces:
- System integration interface of a higher-level system
- Service interface (CDI = Endress+Hauser Common Data Interface)
- Web server
- PROFINET cyclic or acyclic
- Local display (optional)
- Bluetooth® wireless technology (optional)

Navigation:Guidance → Heartbeat Technology → Heartbeat Verification

10.4.2 Data exchange performed by the user (asset management system)

The **Heartbeat Technology** submenu is only available during operation via FieldCare, DeviceCare, SmartBlue app or web server. It contains the wizards that are provided with the Heartbeat Verification + Monitoring application package.

Heartbeat Verification
- Start of verification
- Upload, archive and document the verification results including detailed results

Heartbeat Monitoring
- Configuration of the monitoring function: specify which monitoring parameters are output continuously via the system integration interface.
- The user can read the monitoring measured variables in the operating menu.

Documentation for the Heartbeat Verification application package SD03459F (PROFINET over Ethernet APL) : Endress+Hauser website: www.endress.com → Downloads.

1) The wizard can be started on the display but only shows the result **Passed** option or **Failed** option.

11 Diagnostics and troubleshooting

11.1 General troubleshooting

11.1.1 General faults

Device is not responding
- Possible cause: Supply voltage does not match the specification on the nameplate
  Remedial action: Apply the correct voltage
- Possible cause: The polarity of the supply voltage is wrong
  Remedial action: Correct the polarity
- Possible cause: The connecting cables are not in contact with the terminals.
  Remedial action: Check the electrical contact between cables and correct if necessary
- Possible cause: Load resistance too high
  Remedial action: Increase the supply voltage to reach the minimum terminal voltage

Values not visible on the display
- Possible cause: Graphic display is set too bright or too dark
  Remedial action: Increase or decrease the contrast with the **Contrast display** parameter
  Navigation path: System → Display → Contrast display
- Possible cause: The plug of the display cable is not connected correctly
  Remedial action: Connect the plug correctly
- Possible cause: Display is defective
  Remedial action: Replace the display

"Communication error" is indicated on the display when the device is started or the display is connected
- Possible cause: Electromagnetic interference influence
  Remedial action: Check grounding of the device
- Possible cause: Defective cable connection or display plug
  Remedial action: Replace the display

Display cannot be operated
Possible cause: Operation is disabled for security reasons

Web server not available
Possible cause: The Web server is disabled for security reasons

Communication via CDI interface not working
- Possible cause: Wrong setting of the COM port on the computer
  Remedial action: Check the setting of the COM port on the computer and correct it if necessary
- CDI interface not available
  Possible cause: The CDI interface is disabled for security reasons.

Device measuring incorrectly
Possible cause: Parameter configuration error
Remedial action: Check and correct the parameter configuration

11.1.2 Fault - SmartBlue operation with Bluetooth® wireless technology

No communication with device via SmartBlue
- Possible cause: Bluetooth® connection not available
  Remedial action: Enable the Bluetooth® function on smartphone, tablet and device
- Possible cause: The device is already connected with another smartphone/tablet
  Remedial action: Disconnect the device from the other smartphone/tablet
- Ambient conditions (e.g. walls/tanks) disturbing the Bluetooth® connection
  Remedial action: Establish direct line-of-sight connection
- Display does not have Bluetooth®

Login via SmartBlue not possible

- Possible cause: Device is being put into operation for the first time
  Remedial action: Enter the user name ("admin") and the password (device serial number)
- Possible cause: There is insufficient power available.
  Remedial action: Increase the supply voltage.

Device cannot be operated via SmartBlue

- Possible cause: Incorrect password entered
  Remedial action: Enter the correct password
- Possible cause: Forgotten password
  Remedial action: Use the operating key on the electronic insert to reset the password or contact Endress+Hauser Service (www.addresses.endress.com)
- Possible cause: Operator user role has no authorization
  Remedial action: Change to the Maintenance user role

Device is not visible in the live list

- Possible cause: Bluetooth® connection not available
  Remedial action: Enable Bluetooth® in the field device via display or software tool and/or in the smartphone/tablet.
- Possible cause: Bluetooth® signal outside range
  Remedial action: Reduce distance between field device and smartphone/tablet
  The connection has a range of up to 25 m (82 ft).
  Operating radius with intervisibility 10 m (33 ft)
- Possible cause: Geopositioning is not enabled on Android devices or is not permitted for the SmartBlue app.
  Remedial action: Activate/allow geopositioning service on Android device for the SmartBlue app.

Device appears in the live list but a connection cannot be established

- Possible cause: The device is already connected with another smartphone/tablet via Bluetooth®.
  Only one point-to-point connection is permitted
  Remedial action: Disconnect the smartphone/tablet from the device
- Possible cause: Incorrect user name and password
  Remedial action: The standard user name is "admin" and the password is the device serial number indicated on the device nameplate (only if the password was not changed by the user beforehand)
  If you have forgotten the password, use the operating key on the electronic insert to reset the password or
  contact Endress+Hauser Service (www.addresses.endress.com)

Connection via SmartBlue not possible

Possible cause: Incorrect password entered
Remedial action: Enter the correct password, paying attention to lower/upper case

Connection via SmartBlue not possible

Possible cause: Forgotten password
Remedial action: Use the operating key on the electronic insert to reset the password or contact Endress+Hauser Service (www.addresses.endress.com)

11.1.3 Additional measures

If no clear cause of the error can be identified or the source of the problem can be both the device and the application, the following additional measures can be performed:

1. Reset the device to the factory setting.
2. Check State of vibrating fork or Sensor frequency (display, PROFINET etc.).
3. Check that the device concerned is functioning correctly. If the digital value does not correspond to the anticipated point level or sensor frequency, replace the device.

11.2 Diagnostic information via LED

The LEDs are located on the electronic insert and are only visible when the housing is open. The LEDs are no longer visible if a device display (optional) is connected or a cover without a viewing window is mounted.

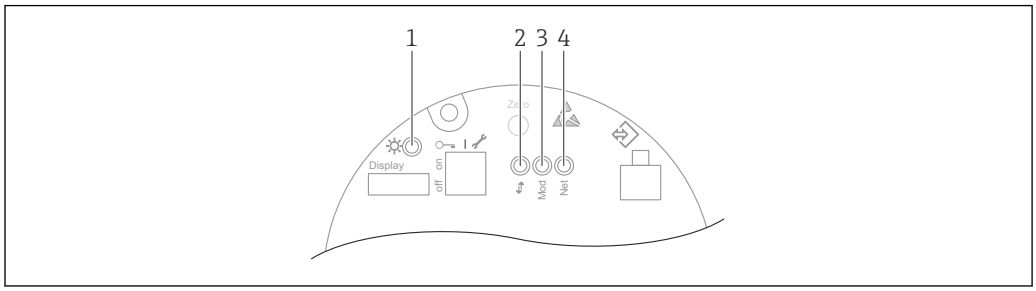

32 *LEDs on electronic insert*

Position	LED	Meaning
1	Off	No power
	LED flashes green	▪ Device commissioning until measured value available ▪ Device reset across all customer interfaces
	LED permanently lit green	Everything OK
	LED off briefly	Key operation
2	Off	No electricity or Ethernet Link
	LED permanently lit yellow	Connection established
	LED flashing yellow	▪ After every data request from host: OFF/ON ▪ Self-test during start-up [1]
3	Off	No power
	LED permanently lit green	Everything OK
	LED flashes red	"Warning"-type diagnostic active
	LED permanently lit red	"Alarm"-type diagnostic active
	LED flashes green and red alternately	Self-test when starting up [2]
4	Off	No power or IP address not available
	LED flashes green	IP address configured but no connection established
	LED permanently lit green	▪ Profinet: The device has at least one established IO application relationship ▪ CIP: An IP address is configured, at least one CIP connection (any transport class) is established and an Exclusive Owner connection has no timeout.
	LED flashes red	Communication error between device and controller
	LED permanently lit red	CIP: Duplicate IP
	LED flashes green and red alternately	Self-test during start-up [2]

1) LED is lit yellow for 0.25 seconds, switches off and remains in this state until the power-up test is completed.
2) LED is lit green for 0.25 seconds, is then lit red for 0.25 seconds, switches off and remains in this state until the power-up test is completed.

11.3 Diagnostic information on onsite display

11.3.1 Diagnostic message

Measured value display and diagnostic message in the event of a failure

Faults detected by the device's self-monitoring system are displayed as a diagnostic message in alternating sequence with the measured value display.

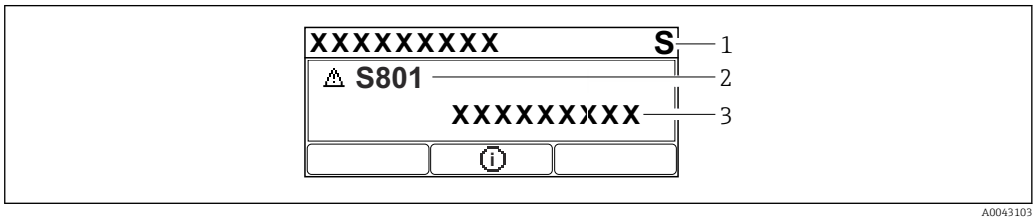

1 Status signal
2 Status symbol with diagnostic event
3 Event text

Status signal

F
Failure (F)
A device error has occurred. The measured value is no longer valid.

C
Function check (C)
The device is in the service mode (e.g. during a simulation).

S
Out of specification (S)
Device operation:
- Outside of the technical specifications (e.g. during startup or a cleaning)
- Outside of the configuration performed by the user (e.g. sensor frequency outside the configured span)

M
Maintenance required (M)
Maintenance required. The measured value is still valid.

Diagnostic event and event text

The fault can be identified by means of the diagnostic event. The event text helps you by providing information about the fault. In addition, the associated status symbol is displayed in front of the diagnostic event.

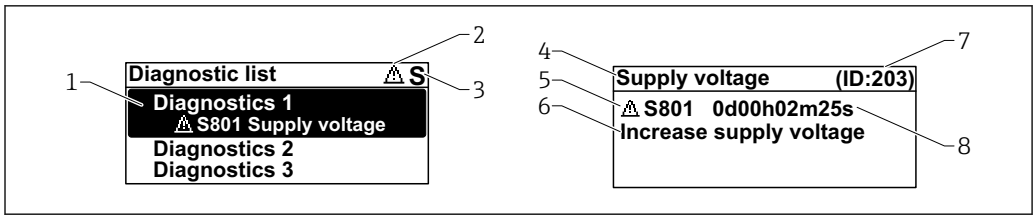

1 *Diagnostic message*
2 *Symbol for event level*
3 *Status signal*
4 *Short text*
5 *Symbol for event level, status signal, diagnostic number*
6 *Remedial measure*
7 *Service ID*
8 *Operating time of occurrence*

Symbol for event level

⊗ **"Alarm" status**
Measurement is interrupted. The signal outputs adopt the defined alarm state. A diagnostic message is generated.

⚠ **"Warning" status**
The device continues to measure. A diagnostic message is generated.

"Active diagnostics" parameter

⊞ *key*

Opens the message about the remedial actions.

⊟ *key*

Acknowledge warnings.

Ⓔ *key*

Back to operating menu.

11.4 Diagnostic information in the web browser

11.4.1 Diagnostic options

Any faults detected by the device are displayed in the header of the web browser after login.

In addition, diagnostic events that have occurred can be displayed in the **Diagnostics** menu.

Status signals

The status signals provide information on the state and reliability of the device by categorizing the cause of the diagnostic information (diagnostic event).

Symbol	Meaning
⊗	**Failure** A device error has occurred Measured value is no longer valid
▽	**Function check** Device is in the service mode (e.g. during a simulation)

Symbol	Meaning
⚠	**Out of specification** Device is being operated outside its technical specification limits (e.g. outside the process temperature range)
🔧	**Maintenance required** Maintenance is required The measured value remains valid

The status signals are categorized in accordance with VDI/VDE 2650 and NAMUR Recommendation NE 107.

Diagnostic information

Devices without a display: The fault can be identified using the diagnostic information. The short text helps you by providing information about the fault. In addition, the corresponding symbol for the diagnostic behavior is displayed in front of the diagnostic information on the local display.

Devices with a display:

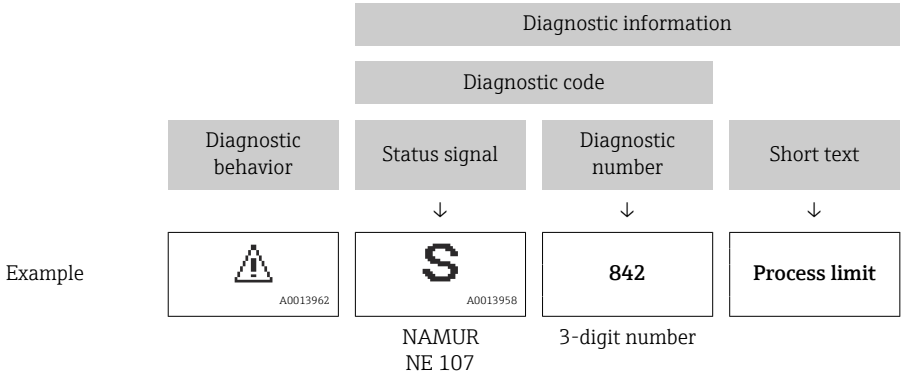

11.4.2 Calling up remedial actions

Remedial actions are provided for each diagnostic event to ensure that problems can be rectified quickly. These measures are displayed in red along with the diagnostic event and the related diagnostic information.

11.5 Diagnostic list

All of the diagnostic messages currently pending can be displayed in the **Diagnostic list** submenu.

Navigation: Diagnostics → Diagnostic list

Diagnostic number	Short text	Remedy instructions	Status signal [from the factory]	Diagnostic behavior [from the factory]
Diagnostic of sensor				
004	Sensor defective	1. Restart device 2. Replace electronics 3. Replace device	F	Alarm
007	Sensor defective	1. Check fork 2. Replace device	F	Alarm
042	Sensor corroded	1. Check fork 2. Replace device	F	Alarm

Diagnostic number	Short text	Remedy instructions	Status signal [from the factory]	Diagnostic behavior [from the factory]
049	Sensor corroded	1. Check fork 2. Replace device	M	Warning [1)]
061	Sensor electronics faulty	Replace electronics	F	Alarm
062	Sensor connection faulty	1. Check Main to sensor connection 2. Replace electronics	F	Alarm
081	Sensor initialization faulty	1. Restart device 2. Contact service	F	Alarm
Diagnostic of electronic				
201	Electronics faulty	1. Restart device 2. Replace electronics	F	Alarm
232	Real time clock defective	Replace main electronics	M	Warning
242	Firmware incompatible	1. Check software 2. Flash or change main electronic module	F	Alarm
252	Module incompatible	1. Check if correct electronic module is plugged 2. Replace electronic module	F	Alarm
263	Electronic incompatible	Check electronic module type	F	Alarm
270	Main electronics defective	Replace main electronics or device.	F	Alarm
272	Main electronics faulty	1. Restart device 2. Contact service	F	Alarm
273	Main electronics defective	Replace main electronics or device.	F	Alarm
282	Data storage inconsistent	Restart device	F	Alarm
283	Memory content inconsistent	1. Restart device 2. Contact service	F	Alarm
287	Memory content inconsistent	1. Restart device 2. Contact service	M	Warning
302	Device verification active	Device verification in progress, please wait.	C	Warning
331	Firmware update failed	1. Update firmware of device 2. Restart device	M	Warning
388	Electronics and HistoROM defective	1. Restart device 2. Replace electronics and HistoROM 3. Contact service	F	Alarm
Diagnostic of configuration				
410	Data transfer failed	1. Retry data transfer 2. Check connection	F	Alarm
412	Processing download	Download active, please wait	S	Warning
436	Date/time incorrect	Check date and time settings.	M	Warning [1)]
437	Configuration incompatible	1. Update firmware 2. Execute factory reset	F	Alarm
438	Dataset different	1. Check dataset file 2. Check device parameterization 3. Download new device parameterization	M	Warning

Diagnostic number	Short text	Remedy instructions	Status signal [from the factory]	Diagnostic behavior [from the factory]
484	Failure mode simulation active	Deactivate simulation	C	Alarm
485	Process variable simulation active	Deactivate simulation	C	Warning
495	Diagnostic event simulation active	Deactivate simulation	S	Warning
538	Configuration Sensor Unit invalid	1. Check sensor configuration 2. Check device configuration	M	Warning
Diagnostic of process				
801	Supply voltage too low	Increase supply voltage	S	Warning
802	Supply voltage too high	Decrease supply voltage	S	Warning
811	APL connection faulty	Connect field device only to APL spur port	F	Alarm
825	Electronics temperature out of range	1. Check ambient temperature 2. Check process temperature	S	Warning [1)]
826	Sensor temperature out of range	1. Check ambient temperature 2. Check process temperature	S	Warning [1)]
842	Process limit	1. Check process density 2. Check fork	F	Alarm
900	Process alert frequency too low	Check process conditions	S	Warning [1)]
901	Process alert frequency too high	Check process conditions	S	Warning [1)]

1) Diagnostic behavior can be changed.

11.6 Event logbook

11.6.1 Event history

The **Event list** submenu provides a chronological overview of the event messages that have occurred [2)].

Navigation: Diagnostics → Event logbook

A maximum of 100 event messages can be displayed in chronological order.

The event history includes entries for:
- Diagnostic events
- Information events

In addition to the operating time when the event occurred, each event is also assigned a symbol that indicates whether the event has occurred or is finished:
- Diagnostic event
  - ⊖: Occurrence of the event
  - ⊖: End of the event
- Information event
  ⊖: Occurrence of the event

2) If operating via FieldCare, the event list can be displayed with the "Event List/HistoROM" function in FieldCare.

11.6.2 Filtering the event logbook

Filters can be used to determine which category of event messages is displayed in the **Event list** submenu.

Navigation: Diagnostics → Event logbook

Filter categories
- All
- Failure (F)
- Function check (C)
- Out of specification (S)
- Maintenance required (M)
- Information

11.6.3 Overview of information events

Info number	Info name
I1000	--------(Device ok)
I1079	Sensor changed
I1089	Power on
I1090	Configuration reset
I1091	Configuration changed
I11036	Date/time set successfully
I11074	Device verification active
I1110	Write protection switch changed
I11284	DIP MIN setting to HW active
I11285	DIP SW setting active
I1151	History reset
I1154	Reset terminal voltage min/max
I1155	Reset electronics temperature
I1157	Memory error event list
I1256	Display: access status changed
I1335	Firmware changed
I1397	Fieldbus: access status changed
I1398	CDI: access status changed
I1440	Main electronic module changed
I1444	Device verification passed
I1445	Device verification failed
I1461	Sensor verification failed
I1512	Download started
I1513	Download finished
I1514	Upload started
I1515	Upload finished
I1551	Assignment error fixed
I1552	Failed: Main electronic verification
I1556	Safety mode off
I1663	Power off
I1666	Clock synchronized

Info number	Info name
I1712	New flash file received
I1956	Reset

11.7 Device reset

11.7.1 Reset password via operating tool

Enter a code to reset the current "Maintenance" password.
The code is delivered by your local support.

Navigation: System → User management → Reset password → Reset password

Reset password

For details see the "Description of device parameters" documentation.

11.7.2 Reset device via operating tool

Reset the device configuration - either entirely or in part - to a defined state

Navigation: System → Device management → Reset device

Reset device parameter

For details, see the "Description of device parameters" documentation.

11.7.3 Resetting the device via operating keys on the electronic insert

Reset password

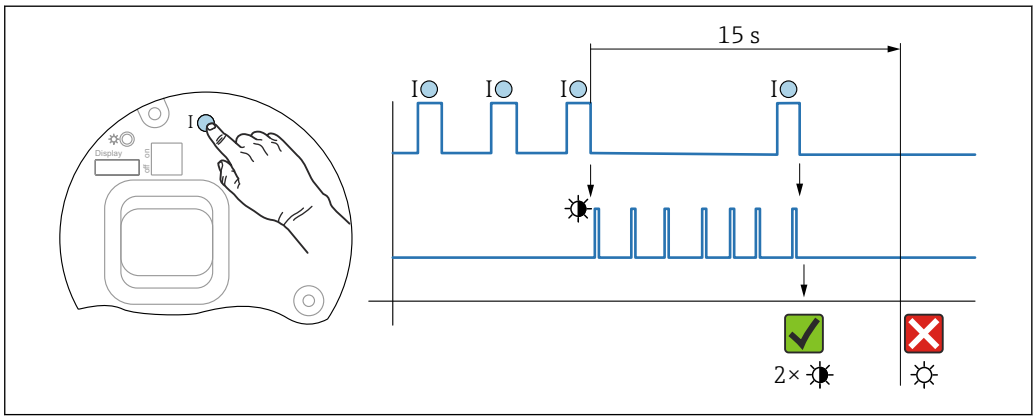

33 *Sequence for resetting the password*

Delete/reset the password

1. Press operating key **I** three times.
   ↳ The Reset Password function is started; the LED flashes.
2. Press operating key **I** once within 15 s.
   ↳ The password is reset, the LED flashes briefly.

If operating key **I** is not pressed within 15 s, the action is canceled and the LED is no longer lit.

Resetting the device to the factory setting

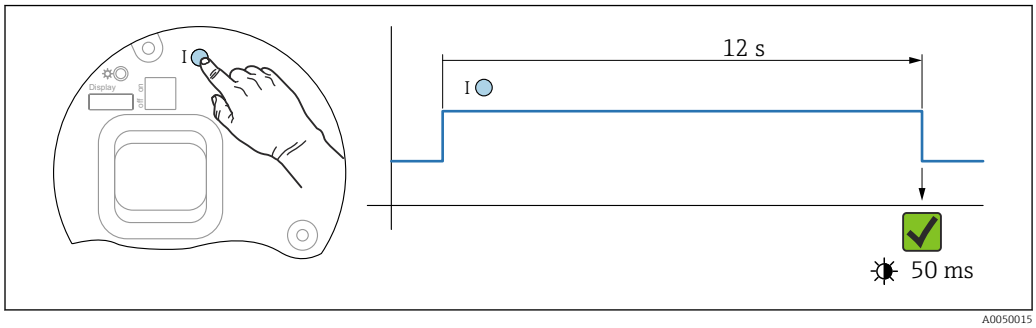

34 *Sequence for resetting to factory setting*

- Press operating key **I** for at least 12 s.
  - ↳ Device data are reset to the factory setting; the LED flashes briefly.

11.8 Device information

All the device information is contained in the **Information** submenu.

Navigation: System → Information

For details see the "Description of device parameters" documentation.

12 Maintenance

12.1 Maintenance tasks

No specific maintenance work is required.

12.1.1 Cleaning

Cleaning of surfaces not in contact with the medium

- Recommendation: Use a lint-free cloth that is either dry or slightly dampened using water.
- Do not use any sharp objects or aggressive cleaning agents that corrode the surfaces (e.g. displays, housing) and seals.
- Do not use high-pressure steam.
- Observe the degree of protection of the device.

The cleaning agent used must be compatible with the materials of the device configuration. Do not use cleaning agents with concentrated mineral acids, bases or organic solvents.

Cleaning of surfaces in contact with the medium

Note the following for cleaning and sterilization in place (CIP/SIP):
- Use only cleaning agents to which the materials in contact with the medium are sufficiently resistant.
- Observe the permitted maximum medium temperature.

Cleaning the vibrating fork

It is not permitted to use the device with abrasive media. Material abrasion on the vibrating fork can result in the device malfunctioning.

- Clean the vibrating fork as necessary
- Cleaning is also possible in the installed state, e.g. CIP Cleaning in Place and SIP Sterilization in Place

13 Repair

13.1 General notes

13.1.1 Repair concept

Endress+Hauser repair concept
- The devices have a modular design
- Customers can carry out repairs

For more information on service and spare parts, please contact your Endress+Hauser sales representative.

13.1.2 Repairs to Ex-approved devices

WARNING

Incorrect repair can compromise electrical safety!
Explosion hazard!
- ▶ Only specialist personnel or the manufacturer's service team may carry out repairs on Ex-certified devices in accordance with national regulations.
- ▶ Relevant standards and national regulations on hazardous areas, safety instructions and certificates must be observed.
- ▶ Only use original spare parts from the manufacturer.
- ▶ Please note the device designation on the nameplate. Only identical parts may be used as replacements.
- ▶ Carry out repairs according to the instructions.
- ▶ Only the manufacturer's service team is permitted to modify a certified device and convert it to another certified version.

13.2 Spare parts

Product spare parts that are currently available can be found online at:
www.endress.com/onlinetools

13.3 Replacement

13.3.1 HistoROM

It is not necessary to perform a new device calibration after replacing the display or transmitter electronics.

The spare part is supplied without HistoROM.

After removing the transmitter electronics, remove HistoRom and insert it into the new spare part.

13.4 Return

The requirements for safe device return can vary depending on the device type and national legislation.

1. Refer to the web page for information: https://www.endress.com
2. If returning the device, pack the device in such a way that it is reliably protected against impact and external influences. The original packaging offers the best protection.

13.5 Disposal

If required by the Directive 2012/19/EU on waste electrical and electronic equipment (WEEE), the product is marked with the depicted symbol in order to minimize the disposal of WEEE as unsorted municipal waste. Do not dispose of products bearing this marking as unsorted municipal waste. Instead, return them to the manufacturer for disposal under the applicable conditions.

14 Accessories

The accessories currently available for the product can be selected at www.endress.com:

1. Select the product using the filters and search field.
2. Open the product page.
3. Select **Spare parts & Accessories**.

The accessories can be partially ordered via the "Accessory enclosed" product structure.

14.1 Device Viewer

All the spare parts for the device, along with the order code, are listed in the *Device Viewer* (www.endress.com/deviceviewer).

14.2 Weather protection cover: 316L, XW112

The weather protection cover can be ordered together with the device via the "Accessory enclosed" product structure.

It is used to protect against direct sunlight, precipitation and ice.

Weather protection cover 316L is suitable for the dual compartment housing made of aluminum or 316L. The delivery includes the holder for direct mounting on the housing.

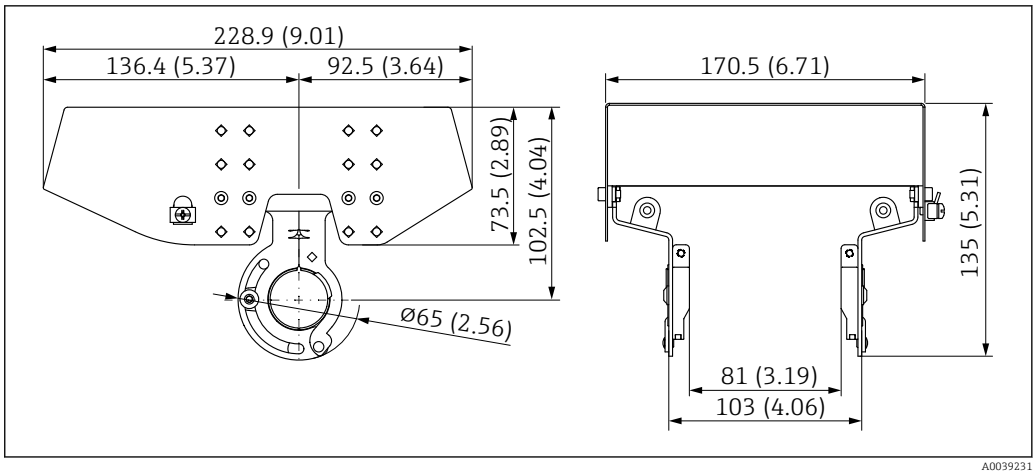

35 *Dimensions of weather protection cover, 316 L, XW112. Unit of measurement mm (in)*

Material
- Weather protection cover: 316L
- Clamping screw: A4
- Bracket: 316L

Accessory order code:
71438303

Special Documentation SD02424F

14.3 Weather protection cover, plastic, XW111

The weather protection cover can be ordered together with the device via the "Accessory enclosed" product structure.

It is used to protect against direct sunlight, precipitation and ice.

The plastic weather protection cover is suitable for the single compartment housing made of aluminum. The delivery includes the holder for direct mounting on the housing.

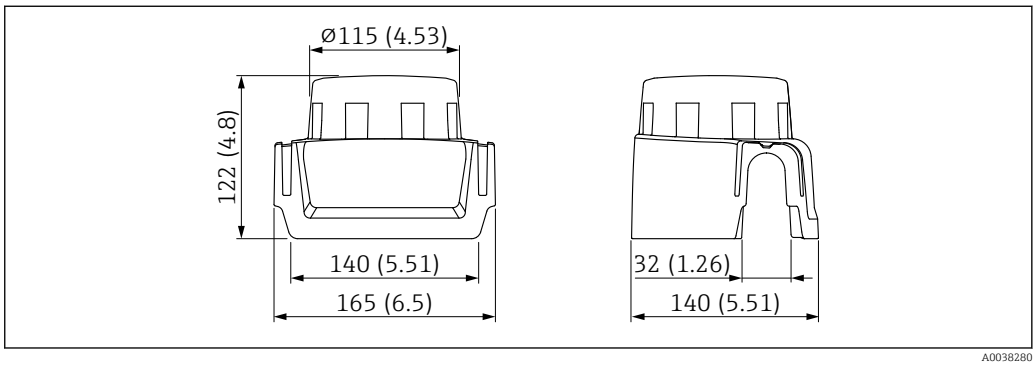

36 *Dimensions of weather protection cover, plastic, XW111. Unit of measurement mm (in)*

Material
Plastic

Accessory order code:
71438291

Special Documentation SD02423F

14.4 M12 socket

The M12 sockets listed are suitable for use in the temperature range −25 to 70 °C (−13 to 158 °F).

M12 socket IP69
- Terminated at one end
- Angled
- 5 m (16 ft) PVC cable (orange)
- Slotted nut 316L (1.4435)
- Body: PVC
- Order number: 52024216

M12 socket IP67
- Angled
- 5 m (16 ft) PVC cable (gray)
- Slotted nut Cu Sn/Ni
- Body: PUR
- Order number: 52010285

14.5 Field Xpert SMT70

Universal, high-performance tablet PC for device configuration in Ex Zone 2 and non-Ex areas

Technical Information TI01342S

14.6 DeviceCare SFE100

Configuration tool for HART, PROFIBUS and FOUNDATION Fieldbus field devices

Technical Information TI01134S

14.7 FieldCare SFE500

FDT-based plant asset management tool

It can configure all smart field units in your system and helps you manage them. By using the status information, it is also a simple but effective way of checking their status and condition.

Technical Information TI00028S

15 Technical data

15.1 Input

15.1.1 Measured variable

The point level signal is triggered according to the operating mode (minimum or maximum detection) when the level exceeds or falls below the relevant point level.

15.1.2 Measuring range

Depends on the installation location and the pipe extension ordered

Sensor length:
- With plastic coating, maximum 3 m (9.8 ft)
- With enamel coating, maximum 1.2 m (3.9 ft)

15.2 Output

15.2.1 Output signal

10BASE-T1L, 2-wire 10 Mbit/s

15.2.2 Signal on alarm

Signal on alarm in accordance with NAMUR Recommendation NE 43

- According to "Application layer protocol for decentralized periphery", Version 2.4
- Diagnostics according to PROFINET PA Profile 4.02

15.2.3 Damping

- Activation of damping is only possible for analog inputs 1 to 3.
- Damping is infinitely adjustable between 0 and 999 s.

The device uses various modules for cyclic data exchange with the control system.

15.2.4 Switch output

Preconfigured switching delay available for order:
- 0.5 s when the vibrating fork is covered and 1.0 s when it is uncovered (factory setting)
- 0.25 s when the vibrating fork is covered and 0.25 s when it is uncovered
- 1.5 s when the vibrating fork is covered and 1.5 s when the vibrating fork is uncovered
- 5.0 s when the vibrating fork is covered and 5.0 s when the vibrating fork is uncovered

The user can also set the switching delays for when the fork is covered and uncovered in the range from 1 to 60 seconds independently of one another.

(operation via display, Bluetooth® wireless technology or web browser, FieldCare, DeviceCare, AMS, PDM)

15.2.5 Ex connection data

See safety instructions (XA): All data relating to explosion protection are provided in separate Ex documentation and are available from the Downloads area of the Endress+Hauser website. The Ex documentation is supplied as standard with all devices approved for use in explosion hazardous areas.

15.2.6 Protocol-specific data

Protocol	Application layer protocol for decentral device periphery and distributed automation, Version 2.4
Communication type	Ethernet Advanced Physical Layer 10BASE-T1L
Conformity class	Conformance class B
Netload Class	Netload Class II
Baud rates	Automatic 10 Mbit/s with full-duplex detection
Periods	From 32 ms

Polarity	Auto-polarity for automatic correction of crossed TxD and RxD pairs
Media Redundancy Protocol (MRP)	Yes
System redundancy support	System redundancy S2 (2 AR with 1 NAP)
Device profile	Application interface identifier 0xB360 Generic device (PA 4.02 Profile Discrete Input)
Manufacturer ID	0x11
Device type ID	0xA1C4
Device description files (GSD, FDI, DTM, DD)	Information and files at: ▪ www.endress.com On the product page for the device: Documents/Software → Device drivers ▪ www.profibus.org
Supported connections	▪ 2 x AR (IO Controller AR) ▪ 1 x AR (IO-Supervisor Device AR connection allowed) ▪ 1 x Input CR (Communication Relation) ▪ 1 x Output CR (Communication Relation) ▪ 1 x Alarm CR (Communication Relation)
Configuration options for device	▪ Manufacturer-specific software (FieldCare, DeviceCare) ▪ Web browser ▪ Device master file (GSD), can be read out via the integrated web server of the device ▪ DIP switch for setting the service IP address
Configuration of the device name	▪ DCP protocol ▪ Process Device Manager (PDM) ▪ Integrated web server
Supported functions	▪ Identification & Maintenance Simple device identification via: ▪ Control system ▪ Nameplate ▪ Measured value status The process variables are communicated with a measured value status ▪ Blinking feature via the local display for simple device identification and assignment ▪ Device operation via operating tools (e.g. FieldCare, DeviceCare, SIMATIC PDM)
System integration	For information on system integration, see Operating Instructions ▪ Cyclic data transmission ▪ Overview and description of the modules ▪ Status coding ▪ Startup parameterization ▪ Factory setting

15.3 Environment

15.3.1 Ambient temperature range

The following values apply up to a process temperature of +90 °C (+194 °F). At higher process temperatures, the permitted ambient temperature is reduced (see diagram).
- Without LCD display: −40 to +70 °C (−40 to +158 °F)
- With LCD display: −40 to +70 °C (−40 to +158 °F) with limitations in optical properties, such as display speed and contrast
  Can be used without limitations: −20 to +60 °C (−4 to +140 °F)

The following ambient temperature applies over the entire process temperature range for devices with a temperature spacer: +70 °C (+158 °F)

Outdoor operation in strong sunlight:
- Mount the device in a shaded location
- Avoid direct sunlight, particularly in warmer climatic regions.
- Use a protective cover, can be ordered as an accessory.

Single compartment housing (plastic)

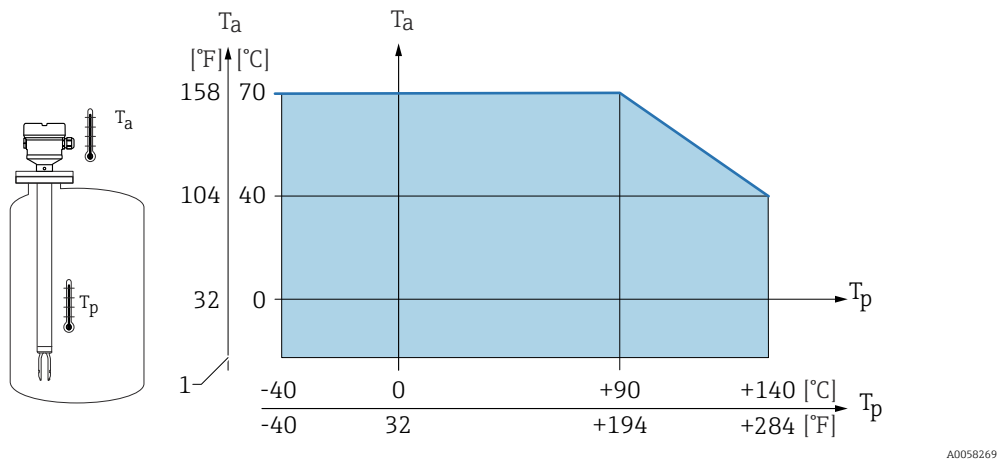

37 *Permitted ambient temperature T_a at the housing as a function of the process temperature T_p in the vessel*

1 *Europe: –20 °C (–4 °F)*
CSA GP: 0 °C (32 °F) indoor use

Single compartment housing (aluminum, coated) and dual compartment housing (aluminum, coated and 316 L)

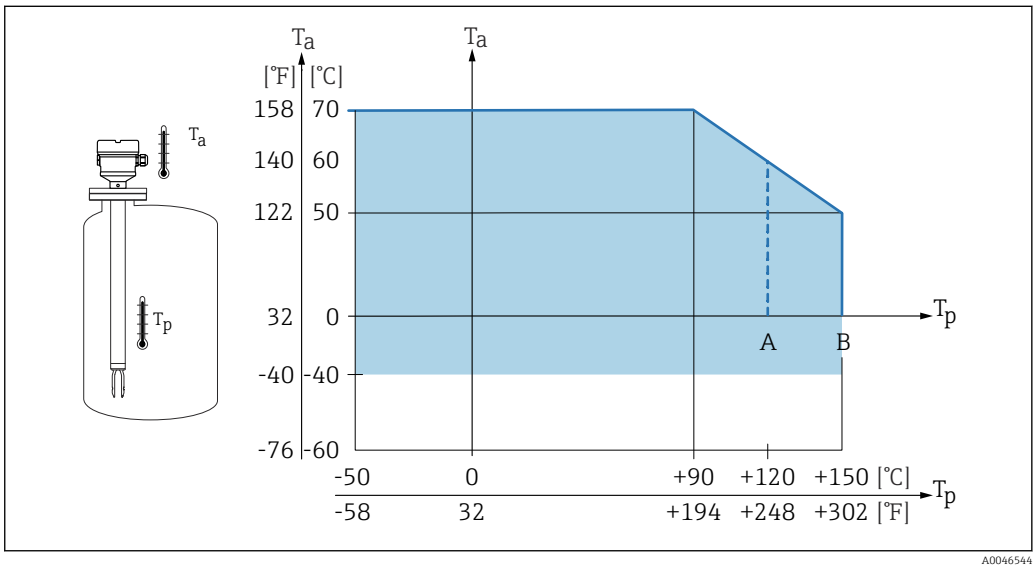

38 *Permitted ambient temperature T_a at the housing as a function of the process temperature T_p in the vessel*

A *ECTFE-coated*
B *PFA- or enamel-coated*

Single compartment housing (316 L, hygiene)

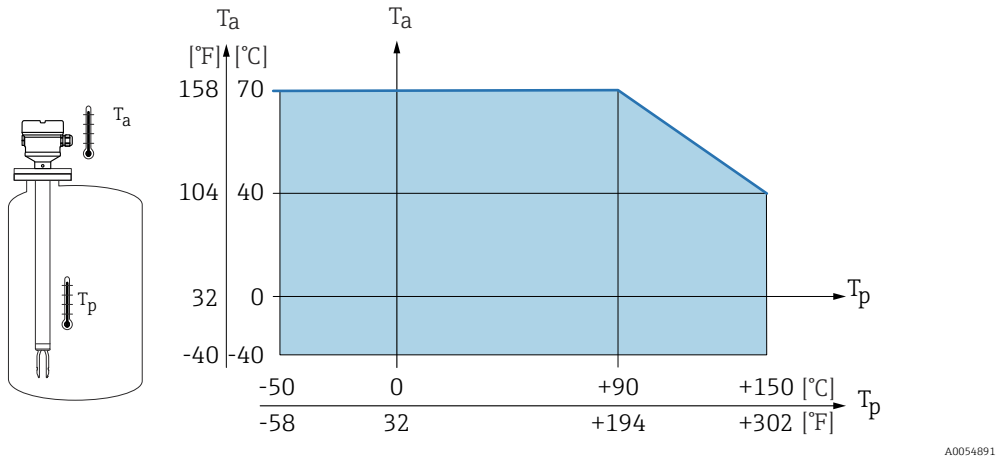

39 *Permitted ambient temperature T_a at the housing as a function of the process temperature T_p in the vessel*

Hazardous area

In the hazardous area, the permitted ambient temperature can be limited depending on the zones and gas groups. Pay attention to the information in the Ex documentation (XA).

15.3.2 Storage temperature

−40 to +80 °C (−40 to +176 °F)

15.3.3 Humidity

Operation up to 100 %. Do not open in a condensing atmosphere.

15.3.4 Operating height

Up to 5 000 m (16 404 ft) above sea level.

15.3.5 Climate class

As per IEC 60068-2-38 test Z/AD

15.3.6 Degree of protection

Testing according to IEC 60529 and NEMA 250

IP68 test condition: 1.83 m H_2O for 24 h

Housing
See cable entries

Cable entries
- M20 coupling, plastic, IP66/68 NEMA Type 4X/6P
- M20 coupling, nickel-plated brass, IP66/68 NEMA Type 4X/6P
- M20 coupling, 316L, IP66/68 NEMA Type 4X/6P
- M20 thread, IP66/68 NEMA Type 4X/6P
- G ½ thread, NPT ½ , IP66/68 NEMA Type 4X/6P

Degree of protection for M12 plug
- When housing is closed and connecting cable is plugged in: IP66/67 NEMA Type 4X
- When housing is open or connecting cable is not plugged in: IP20, NEMA Type 1

NOTICE

M12 plug: Loss of IP protection class due to incorrect installation!

- The degree of protection only applies if the connecting cable used is plugged in and screwed tight.
- The degree of protection only applies if the connecting cable used is specified according to IP67 NEMA Type 4X.

If the "M12 plug" option is selected as the electrical connection, **IP66/67 NEMA Type 4X** applies for all housing types.

15.3.7 Vibration resistance

As per IEC60068-2-64-2008
a(RMS) = 50 m/s^2, f = 5 to 2 000 Hz, t = 3 axes x 2 h

15.3.8 Shock resistance

As per IEC 60068-2-27-2008: 300 m/s^2 [= 30 g_n] + 18 ms

g_n: standard acceleration of gravity

15.3.9 Mechanical load

Support the device in the event of severe dynamic load. Maximum lateral loading capacity of the pipe extensions and sensors: 75 Nm (55 lbf ft).

For more details, see the "Supporting the device" section.

15.3.10 Pollution degree

Pollution level 2

15.3.11 Electromagnetic compatibility (EMC)

- Electromagnetic compatibility according to EN 61326 series. Interference immunity according to Table 2 (Industrial), interference radiation according to Group 1 Class B
- Electromagnetic compatibility as per NAMUR recommendation EMC NE21
- Maximum deviation during EMC testing: < 0.5 % of span

For more details, refer to the EU Declaration of Conformity.

15.4 Process

15.4.1 Process temperature range

- ECTFE: −50 to +120 °C (−58 to +248 °F)
- PFA: −50 to +150 °C (−58 to +302 °F)
- Enamel:−50 to +150 °C (−58 to +302 °F)

Pay attention to the pressure and temperature dependency. "Process pressure range" section.

15.4.2 Thermal shock

≤ 120 K/s

15.4.3 Process pressure range

The maximum pressure for the device depends on the lowest-rated element with regard to pressure.

Components are: process connection, optional mounting parts, or accessories.

WARNING

Incorrect design or use of the device may lead to bursting parts!
This may result in severe, possibly irreversible injury to persons and environmental hazards.

- Only operate the device within the specified limits for the components!
- MWP (maximum working pressure): The maximum working pressure is specified on the nameplate. This value refers to a reference temperature of 20 °C (68 °F) and may be present at the device for an unlimited time. Note temperature dependency of MWP. For higher temperatures, refer to the following standards for the permitted pressure values for flanges:EN 1092-1 (materials 1.4435 and 1.4404 are identical with regard to their stability/temperature property and are grouped together in under 13E0 in EN 1092-1 Tab. 18. The chemical composition of the two materials can be identical), ASME B 16.5a, JIS B 2220 (the latest version of the standard applies in each case).
- The Pressure Equipment Directive (2014/68/EU) uses the abbreviation "PS". The abbreviation "PS" corresponds to the maximum working pressure (MWP) of the device
- MWP data that deviate from this is provided in the relevant sections of the Technical Information.

Refer to the following standards for the permitted pressure values of the flanges at higher temperatures:

- pR EN 1092-1: With regard to its stability-temperature property, the material 1.4435 is identical to 1.4404, which is classed as 13E0 in EN 1092-1 Tab. 18. The chemical composition of the two materials can be identical.
- ASME B 16.5
- JIS B 2220

The following data apply over the entire temperature range. Pay attention to exceptions for flange process connections!

- ECTFE, PFA: −1 to 40 bar (−14.5 to 580 psi)
- Enamel: max. −1 to 25 bar (−14.5 to 363 psi)

In each case, the lowest value from the derating curves of the device and the selected flange applies.

Canadian CRN approval: more details about the maximum pressure values are available in the download area of the product page under: www.endress.com→ Downloads.

15.4.4 Overpressure limit

- Overpressure limit = 1.5 · PN
  - ECTFE, PFA: PN = 40 bar (580 psi)
  - Enamel: PN = 25 bar (362.5 psi)
- Membrane burst pressure at 200 bar (2 900 psi)

The device function is limited during the pressure test.

Mechanical integrity is guaranteed up to 1.5 times the process nominal pressure PN.

15.4.5 Medium density

Liquids with density > 0.7 g/cm³ (43.7 lb/ft³)
Setting > 0.7 g/cm³ (43.7 lb/ft³), as supplied to the customer

Liquids with density > 0.5 g/cm³ (31.2 lb/ft³)
Setting > 0.5 g/cm³ (31.2 lb/ft³), can be ordered as preset value or configurable

Liquids with density > 0.4 g/cm³ (25.0 lb/ft³)
Setting > 0.4 g/cm³ (25.0 lb/ft³), can be ordered as preset value or configurable

15.4.6 Viscosity

≤ 10 000 mPa·s

15.4.7 Pressure tightness

Up to vacuum

In vacuum evaporation plants, select the 0.4 g/cm³ (25.0 lb/ft³)/ density setting.

15.4.8 Solids contents

Ø ≤ 5 mm (0.2 in)

15.5 Additional technical data

Current Technical Information: Endress+Hauser website: www.endress.com → Downloads.

71783288

www.addresses.endress.com

Endress+Hauser

People for Process Automation