BA02286F/00/EN/03.26-00
71783285
2026-09-11

Valid from
01.01.zz (Device firmware)

Operating Instructions
Liquiphant FTL63

Vibronic
Level switch for liquids specifically for the food and life sciences industries

Endress+Hauser
People for Process Automation

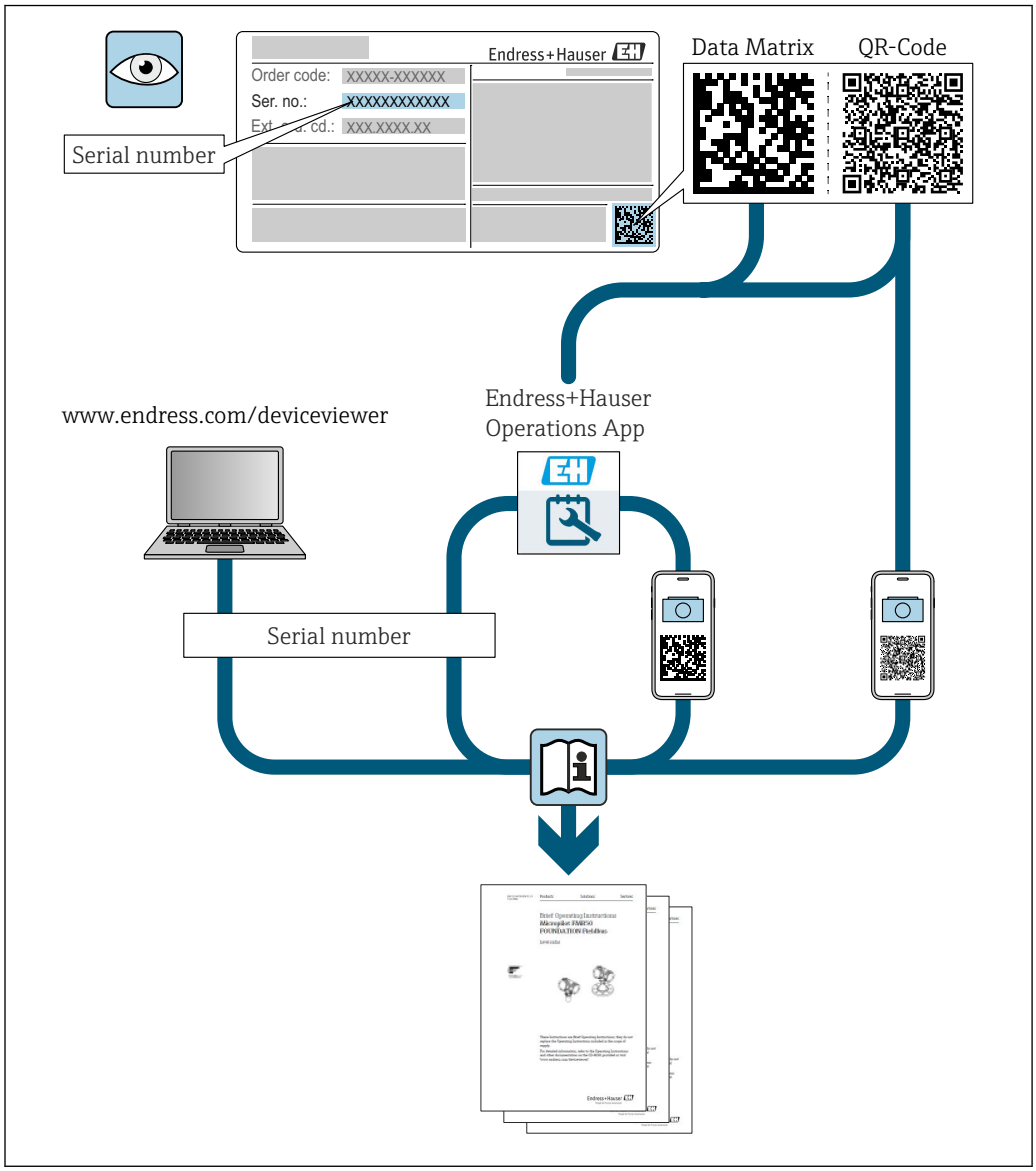

A0023555

- Make sure the document is stored in a safe place such that it is always available when working on or with the device
- Avoid danger to individuals or the facility: read the "Basic safety instructions" section carefully, as well as all other safety instructions in the document that are specific to working procedures

The manufacturer reserves the right to modify technical data without prior notice. The Endress+Hauser sales organization will supply you with current information and updates to these instructions.

Table of contents

1 About this document 5
1.1 Document function 5
1.2 Symbols 5
1.2.1 Safety symbols 5
1.2.2 Electrical symbols 5
1.2.3 Tool symbols 5
1.2.4 Communication-specific symbols 5
1.2.5 Symbols for certain types of Information 5
1.2.6 Symbols in graphics 6
1.2.7 Registered trademarks 6
1.3 Documentation 6
1.4 Change history 6

2 Basic safety instructions 6
2.1 Requirements for the personnel 6
2.2 Intended use 7
2.3 Workplace safety 7
2.4 Operational safety 7
2.5 Product safety 8
2.6 Functional Safety SIL (optional) 8
2.7 IT security 8

3 Product description 8
3.1 Measuring principle 8
3.1.1 Point level measurement 8
3.2 Product design 9

4 Incoming acceptance and product identification 9
4.1 Incoming acceptance 9
4.2 Product identification 10
4.2.1 Nameplate 10
4.2.2 Electronic insert 10
4.2.3 Manufacturer address 10
4.3 Storage and transport 10
4.3.1 Storage conditions 10

5 Installation 11
5.1 Installation requirements 11
5.1.1 Taking the switch point into consideration 11
5.1.2 Take viscosity into consideration 12
5.1.3 Avoid buildup 13
5.1.4 Take clearance into consideration . . . 13
5.1.5 Support the device 14
5.1.6 Weld-in adapter with leakage hole . . 14
5.2 Installing the device 15
5.2.1 Required tool 15
5.2.2 Installation procedure 15
5.3 Post-mounting check 17

6 Electrical connection 17
6.1 Required tool 17
6.2 Connecting requirements 17
6.2.1 Cover with securing screw 17
6.2.2 Connecting protective earth (PE) 18
6.3 Connecting the device 18
6.3.1 2-wire AC (electronic insert FEL61) . 18
6.3.2 3-wire DC PNP (electronic insert FEL62) 21
6.3.3 Universal current connection with relay output (electronic insert FEL64) 24
6.3.4 Relay output DC connection (electronic insert FEL64 DC) 26
6.3.5 PFM output (electronic insert FEL67) 28
6.3.6 2-wire NAMUR > 2.2 mA/< 1.0 mA (electronic insert FEL68) 30
6.3.7 LED module VU120 (optional) 32
6.3.8 Bluetooth® module VU121 (optional) 34
6.3.9 Connecting the cable 35
6.4 Post-connection check 36

7 Operation options 37
7.1 Overview of operation options 37
7.1.1 Operation concept 37
7.1.2 Elements on the electronic insert 37
7.1.3 Heartbeat Technology with Bluetooth® wireless technology 37
7.1.4 LED module VU120 (optional) 38

8 Commissioning 38
8.1 Post-installation and function check 38
8.2 Functional test using button on electronic insert 38
8.2.1 FEL61 switching behavior and signaling 39
8.2.2 FEL62 switching behavior and signaling 40
8.2.3 FEL64, FEL64DC switching behavior and signaling 40
8.2.4 FEL67 switching behavior and signaling 40
8.2.5 FEL68 switching behavior and signaling 42
8.3 Functional test of the electronic switch using the test magnet 42
8.4 Switching on the device 42
8.5 Establishing a connection via SmartBlue app . . 43
8.5.1 Requirements 43
8.5.2 Preliminaries 43
8.5.3 Establishing a connection via SmartBlue app 43

9 Operation 45

9.1 Diagnostics menu 45
9.1.1 "Diagnostics" menu 45
9.1.2 "Application" menu 45
9.1.3 "System" menu 46
9.2 Heartbeat Verification 47
9.3 Proof testing for SIL/WHG devices 47

10 Diagnostics and troubleshooting . . . 48

10.1 Diagnostic information via LED 48
10.1.1 LED at electronic insert 48
10.1.2 SmartBlue 48

11 Maintenance 49

11.1 Maintenance tasks 49
11.1.1 Cleaning 49

12 Repair 50

12.1 General notes 50
12.1.1 Repair concept 50
12.1.2 Repairs to Ex-approved devices 50
12.2 Spare parts 50
12.3 Return 50
12.4 Disposal 50
12.5 Battery disposal 51

13 Accessories 51

13.1 LED module VU120 (optional) 51
13.2 Bluetooth module VU121 (optional) 51
13.3 Protective cover: 316L, XW112 52
13.4 Weather protection cover, plastic, XW111 . . . 53
13.5 Weld-in adapter 53
13.6 Test magnet 54
13.7 M12 socket 54

14 Technical data 55

14.1 Input 55
14.1.1 Measured variable 55
14.1.2 Measuring range 55
14.2 Output 55
14.2.1 Output and input variants 55
14.2.2 Output signal 56
14.2.3 Ex connection data 56
14.3 Environment 56
14.3.1 Ambient temperature range 56
14.3.2 Storage temperature 58
14.3.3 Humidity 58
14.3.4 Operating altitude 58
14.3.5 Climate class 58
14.3.6 Degree of protection 58
14.3.7 Vibration resistance 58
14.3.8 Shock resistance 58
14.3.9 Mechanical load 59
14.3.10 Pollution degree 59
14.3.11 Electromagnetic compatibility (EMC) 59
14.4 Process 59
14.4.1 Process temperature range 59
14.4.2 Thermal shock 59
14.4.3 Process pressure range 59
14.4.4 Overpressure limit 60
14.4.5 Medium density 60
14.4.6 Viscosity 60
14.4.7 Pressure tightness 60
14.4.8 Solids contents 60
14.5 Additional technical data 61

1 About this document

1.1 Document function

These Operating Instructions contain all the information required in the various life cycle phases of the device: from product identification, incoming acceptance and storage, to installation, connection, operation and commissioning, through to troubleshooting, maintenance and disposal.

1.2 Symbols

1.2.1 Safety symbols

⚠ DANGER

This symbol alerts you to a dangerous situation. Failure to avoid this situation will result in serious or fatal injury.

⚠ WARNING

This symbol alerts you to a potentially dangerous situation. Failure to avoid this situation can result in serious or fatal injury.

⚠ CAUTION

This symbol alerts you to a potentially dangerous situation. Failure to avoid this situation can result in minor or medium injury.

NOTICE

This symbol alerts you to a potentially harmful situation. Failure to avoid this situation can result in damage to the product or something in its vicinity.

1.2.2 Electrical symbols

⏚ Ground connection
Grounded clamp, which is grounded via a grounding system.

⊜ Protective earth (PE)
Ground terminals, which must be grounded prior to establishing any other connections. The ground terminals are located on the inside and outside of the device.

1.2.3 Tool symbols

Flat-blade screwdriver

Allen key

Open-ended wrench

1.2.4 Communication-specific symbols

Bluetooth® wireless technology
Wireless data transmission between devices over a short distance via radio technology.

1.2.5 Symbols for certain types of Information

✅ Permitted
Procedures, processes or actions that are permitted.

❌ Forbidden
Procedures, processes or actions that are forbidden.

Tip
Indicates additional information

Reference to documentation

Reference to another section

1., 2., 3. Series of steps

1.2.6 Symbols in graphics

A, B, C ... View

1, 2, 3 ... Item numbers

Hazardous area

Safe area (non-hazardous area)

1.2.7 Registered trademarks

Bluetooth®
The *Bluetooth®* word mark and logos are registered trademarks owned by the Bluetooth SIG, Inc. and any use of such marks by Endress+Hauser is under license. Other trademarks and trade names are those of their respective owners.

Apple®
Apple, the Apple logo, iPhone, and iPod touch are trademarks of Apple Inc., registered in the U.S. and other countries. App Store is a service mark of Apple Inc.

Android®
Android, Google Play and the Google Play logo are trademarks of Google Inc.

1.3 Documentation

For an overview of the scope of the associated Technical Documentation, refer to the following:
- *Device Viewer* (www.endress.com/deviceviewer): Enter the serial number from the nameplate
- *Endress+Hauser Operations app*: Enter serial number from nameplate or scan matrix code on nameplate.

1.4 Change history

V01.01.zz (01.2019)
- Valid for electronic inserts: FEL61, FEL62, FEL64, FEL67, FEL68
- Valid from documentation version: BA02286F/00/EN/01.23
- Changes: None; first version (original software)

2 Basic safety instructions

2.1 Requirements for the personnel

The personnel for installation, commissioning, diagnostics and maintenance must fulfill the following requirements:
- Trained, qualified specialists must have a relevant qualification for this specific function and task.
- Are authorized by the plant owner/operator.
- Are familiar with federal/national regulations.

- Before starting work, read and understand the instructions in the manual and supplementary documentation as well as the certificates (depending on the application).
- Follow instructions and comply with basic conditions.

The operating personnel must fulfill the following requirements:
- Are instructed and authorized according to the requirements of the task by the facility's owner-operator.
- Follow the instructions in this manual.

2.2 Intended use

The device described in this manual is intended only for the level measurement of liquids.

Do not exceed or drop below the relevant limit values for the device
See the Technical Documentation

Incorrect use
The manufacturer is not liable for damage caused by improper or non-designated use.

Avoid mechanical damage:
- Do not touch or clean device surfaces with pointed or hard objects.

Clarification for borderline cases:
- For special media and fluids for cleaning, Endress+Hauser is glad to provide assistance in verifying the corrosion resistance of fluid-wetted materials, but does not accept any warranty or liability.

Residual risks
Due to the transfer of heat from the process and power dissipation within the electronics, the temperature of the housing may increase to up to 80 °C (176 °F) during operation. When in operation, the sensor can reach a temperature close to the medium temperature.

Danger of burns from contact with surfaces!
- In the event of elevated fluid temperatures, ensure protection against contact to prevent burns.

2.3 Workplace safety

For work on and with the device:
- Wear the required personal protective equipment according to federal/national regulations.

2.4 Operational safety

Damage to the device!
- Operate the device only if it is in proper technical condition, free from errors and faults.
- The operator is responsible for the trouble-free operation of the device.

Configuration, testing and maintenance work on the device

Process safety may be at risk during configuration, testing and maintenance work on the device.
- Alternative supervisory measures must be taken to guarantee the operational safety and process safety.

Modifications to the device

Unauthorized modifications to the device are not permitted and can lead to unforeseeable dangers.
- If modifications are nevertheless required, consult Endress+Hauser.

Repair

To ensure continued operational safety and reliability:
- Only perform repair work on the device if this is expressly permitted.
- Observe federal/national regulations pertaining to the repair of an electrical device.
- Use original spare parts and accessories from Endress+Hauser only.

Hazardous area

To eliminate danger to persons or the facility when the device is used in the hazardous area (e.g. explosion protection):
- Check the nameplate to verify if the device ordered can be put to its intended use in the hazardous area.
- Comply with the instructions in the separate supplementary documentation, which is an integral part of this manual.

2.5 Product safety

This state-of-the-art device is designed and tested in accordance with good engineering practice to meet operational safety standards. It left the factory in a condition in which it is safe to operate.

It meets general safety standards and legal requirements. It also complies with the EU directives listed in the device-specific EU declaration of conformity. The manufacturer confirms this by affixing the CE mark.

2.6 Functional Safety SIL (optional)

The Functional Safety Manual must be strictly observed for devices that are used in functional safety applications.

2.7 IT security

The manufacturer warranty is valid only if the product is installed and used as described in the Operating Instructions. The product features security mechanisms to protect it against any inadvertent changes to the settings. Security measures, which provide additional protection for the product and associated data transfer, must be implemented by the operators themselves in line with their security standards.

3 Product description

Level switch for all liquids, for minimum or maximum detection in tanks, vessels and pipes.

3.1 Measuring principle

The sensor's vibrating fork vibrates at its natural frequency. As soon as the liquid covers the vibrating fork, the oscillation frequency decreases. The change in frequency causes the level switch to switch.

3.1.1 Point level measurement

Maximum or minimum detection for liquids in tanks or pipes in all industries. Suitable for leakage monitoring, pump dry-running protection or overfill prevention, for example.

Specific versions are suitable for use in hazardous areas.

The level switch differentiates between the "covered" and "not covered" conditions.

Depending on the MIN (minimum detection) or MAX (maximum detection) modes, there are two possibilities in each case: OK status and demand mode.

OK status
- In MIN mode, the vibrating fork is covered, e.g. pump dry-run protection
- In MAX mode, the vibrating fork is not covered, e.g. overfill protection

Demand mode
- In MIN mode, the vibrating fork is not covered, e.g. pump dry-run protection
- In MAX mode, the vibrating fork is covered, e.g. overfill protection system

3.2 Product design

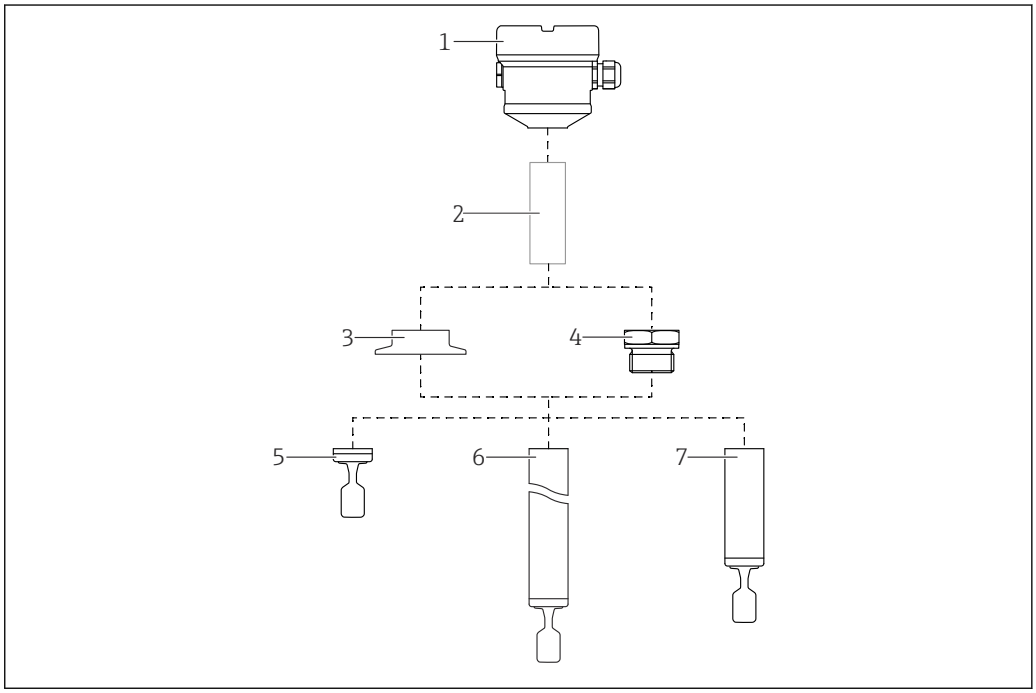

1 Product design

1 *Housing with electronic insert and cover; optional Bluetooth module or LED module*
2 *Temperature spacer, pressure-tight feedthrough (second line of defense), optional*
3 *Process connection, e.g. clamp/Tri-Clamp*
4 *Process connection, e.g. thread*
5 *Compact probe version with tuning fork*
6 *Pipe extension probe with tuning fork*
7 *Short pipe version of probe with tuning fork*

4 Incoming acceptance and product identification

4.1 Incoming acceptance

On receipt of the delivery:

1. Check the packaging for damage.
   ↳ Report all damage immediately to the manufacturer.
   Do not install damaged components.

2. Check the scope of delivery using the delivery note.
3. Compare the data on the nameplate with the order specifications on the delivery note.
4. Check the technical documentation and all other necessary documents, e.g. certificates, to ensure they are complete.

If one of the conditions is not satisfied, contact the manufacturer.

4.2 Product identification

The following options are available for identification of the device:
- Nameplate specifications
- Order code with breakdown of the device features on the delivery note
- Enter the serial numbers from the nameplates in *Device Viewer* (www.endress.com/deviceviewer): all the information about the device is displayed.

4.2.1 Nameplate

Do you have the correct device?

The nameplate provides you with the following information on the device:
- Manufacturer identification, device designation
- Order code
- Extended order code
- Serial number
- Tag name (TAG) (optional)
- Technical values such as supply voltage, current consumption, ambient temperature, communication-specific data (optional)
- Degree of protection
- Approvals with symbols
- Reference to Safety Instructions (XA) (optional)

▶ Compare the information on the nameplate with the order.

4.2.2 Electronic insert

Identify the electronic insert via the order code on the nameplate.

4.2.3 Manufacturer address

Endress+Hauser SE+Co. KG
Hauptstraße 1
79689 Maulburg, Germany

Place of manufacture: See nameplate.

4.3 Storage and transport

4.3.1 Storage conditions

Use original packaging.

Storage temperature

−40 to +80 °C (−40 to +176 °F)
Optional: −50 °C (−58 °F), −60 °C (−76 °F)

Transporting the device

- Transport the device to the measuring point in the original packaging
- Hold the device by the housing, temperature spacer, process connection or extension pipe
- Do not bend, shorten or extend the tuning fork

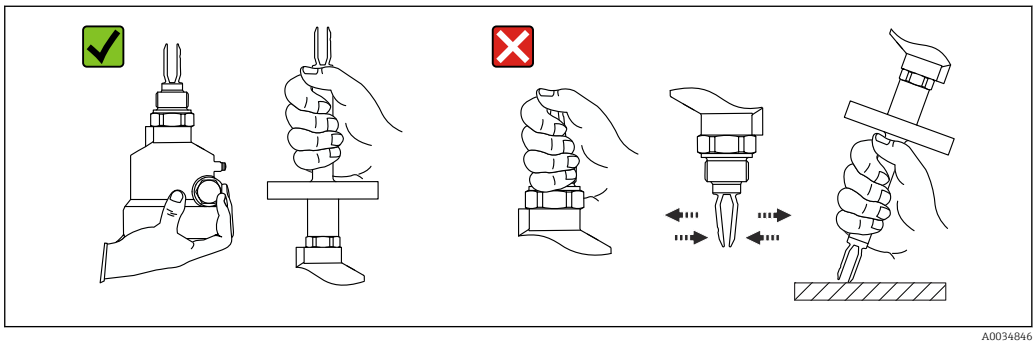

2 *Handling the device during transport*

5 Installation

Mounting instructions

- Any orientation for compact version or version with a pipe length of up to 500 mm (19.7 in)approx.
- Vertical orientation from above for device with long pipe
- Minimum distance between the tuning fork and the tank wall or pipe wall: 10 mm (0.39 in)

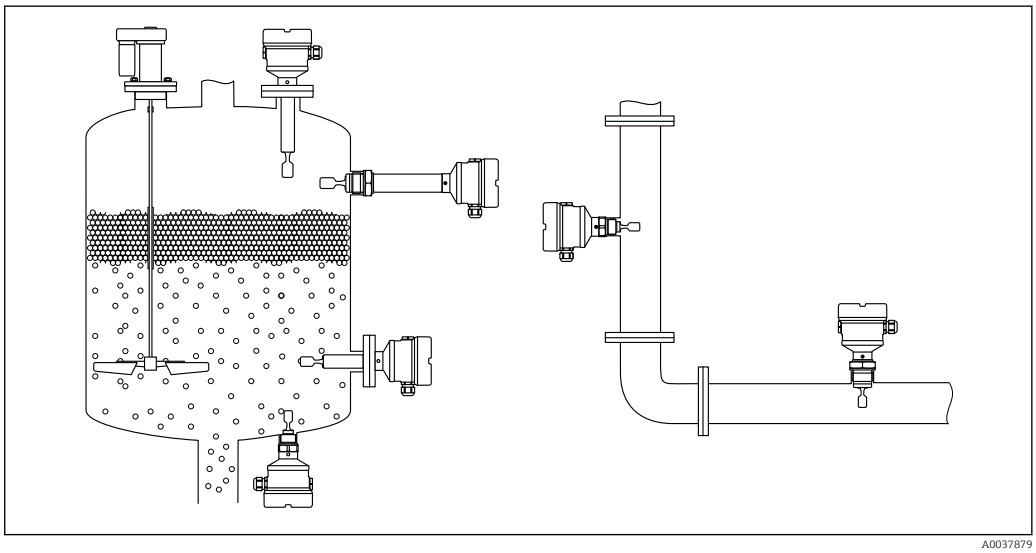

3 *Installation examples for a vessel, tank or pipe*

5.1 Installation requirements

5.1.1 Taking the switch point into consideration

The following are typical switch points, depending on the orientation of the level switch.

Minimum distance between the tuning fork and the tank wall or pipe wall: 10 mm (0.39 in)

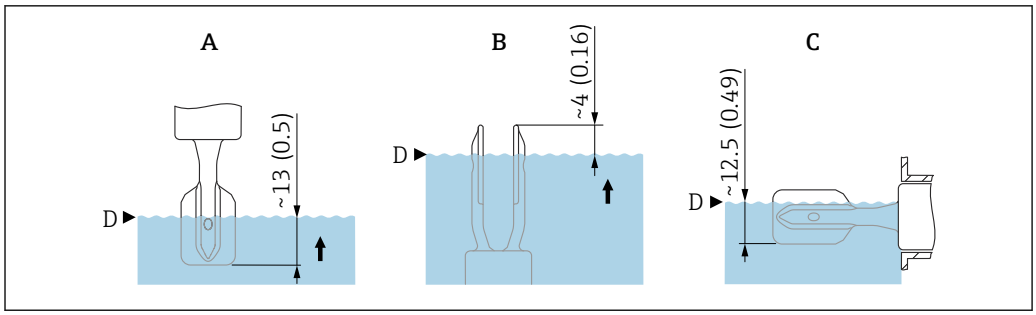

4 *Typical switch points. Unit of measurement mm (in)*

A Installation from above
B Installation from below
C Installation from the side
D Switch point (at reference operating conditions, e.g., water with a temperature of 23 °C (73 °F))

5.1.2 Take viscosity into consideration

Viscosity values
- Low viscosity : < 2 000 mPa·s
- High viscosity: > 2 000 to 10 000 mPa·s

Low viscosity

Low viscosity, e.g. water: < 2 000 mPa·s

It is permitted to position the tuning fork within the installation socket.

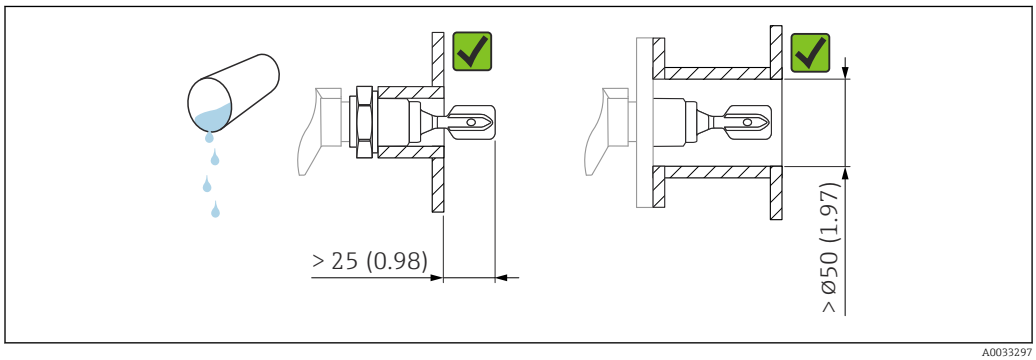

5 *Installation example for low-viscosity liquids. Unit of measurement mm (in)*

High viscosity

NOTICE

Highly viscous liquids may cause switching delays.

- ▶ Make sure that the liquid can run off the tuning fork easily.
- ▶ Deburr the socket surface.

High viscosity, e.g. viscous oils: ≤ 10 000 mPa·s

The tuning fork must be located outside the installation socket!

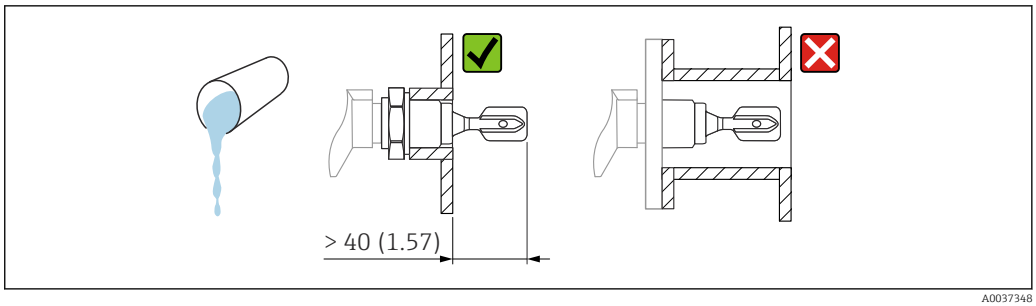

6 *Installation example for a highly viscous liquid. Unit of measurement mm (in)*

5.1.3 Avoid buildup

- Use short installation sockets to ensure that the tuning fork projects freely into the vessel
- Leave sufficient distance between the buildup expected on the tank wall and the tuning fork

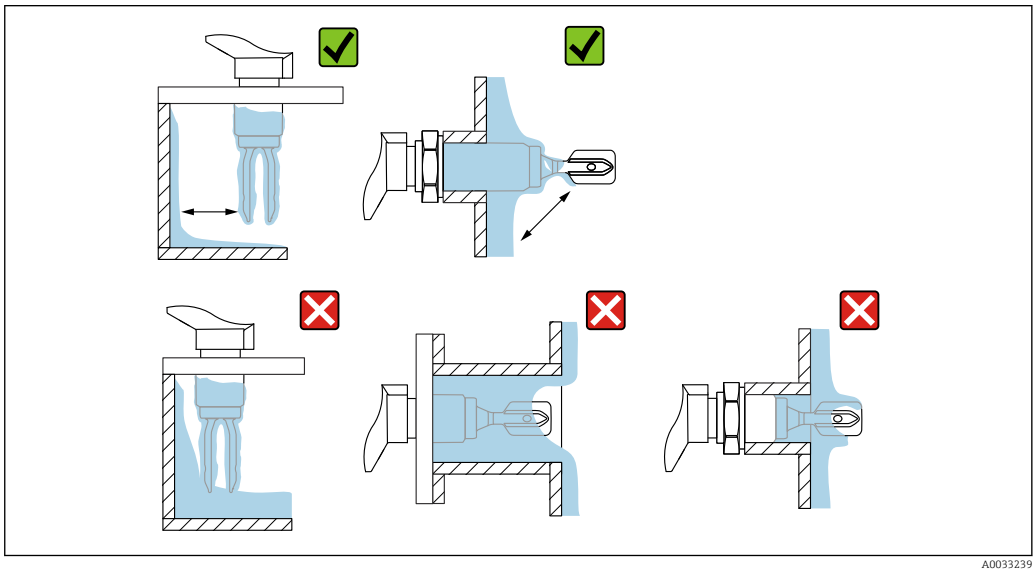

7 *Installation examples for a highly viscous process medium*

5.1.4 Take clearance into consideration

Allow sufficient space outside the tank for mounting, connection and settings involving the electronic insert.

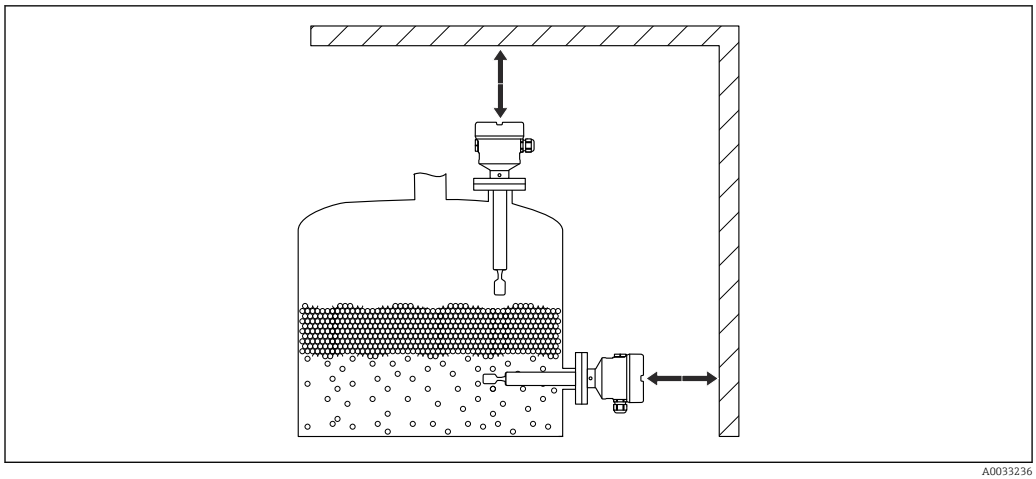

8 *Take clearance into consideration*

5.1.5 Support the device

Support the device in the event of severe dynamic load. Maximum lateral loading capacity of the pipe extensions and sensors: 75 Nm (55 lbf ft).

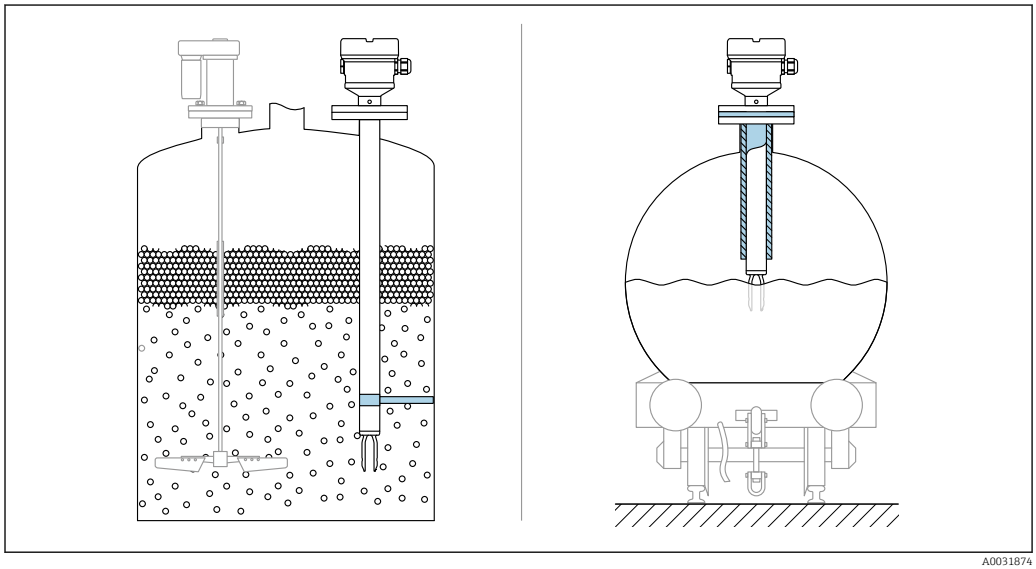

9 *Examples of support in the event of dynamic load*

5.1.6 Weld-in adapter with leakage hole

Position the weld-in adapter so that the leakage hole points downwards. This allows any leakage to be detected at an early stage, as the escaping medium becomes visible.

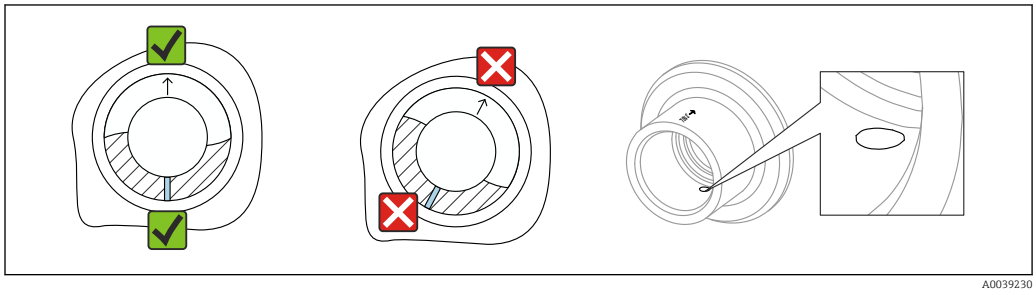

10 *Weld-in adapter with leakage hole*

5.2 Installing the device

5.2.1 Required tool

- Open-ended wrench for sensor installation
- Allen key for housing locking screw

5.2.2 Installation procedure

Align the vibrating fork using the marking

The vibrating fork can be aligned using the marking in such a way that the medium drains off easily and buildup is avoided.

- Markings for threaded connections: Circle (material specification/thread designation opposite)
- Markings for flange or clamp connections: Line or double line

In addition, the threaded connections have a matrix code that is **not** used for alignment.

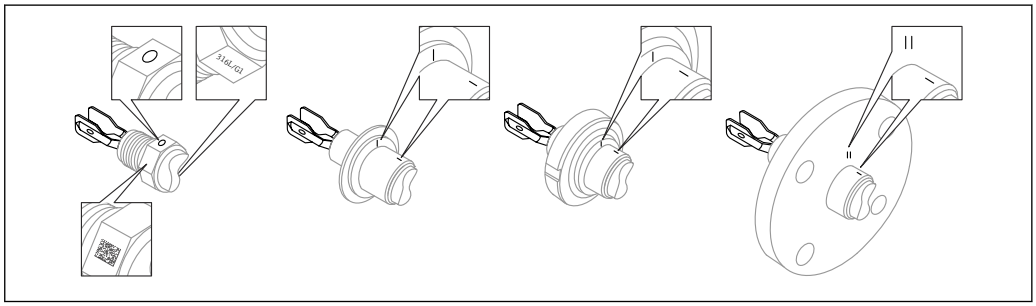

11 Position of the vibrating fork when installed horizontally in the vessel using the marking

Installing the device in piping

- Flow velocity up to 5 m/s with a viscosity of 1 mPa·s and density of 1 g/cm³ (62.4 lb/ft³) (SGU).
  Check for correct functioning in the event of other process medium conditions.
- The flow will not be significantly impeded if the tuning fork is correctly aligned and the marking is pointing in the direction of flow.
- The marking is visible when installed.

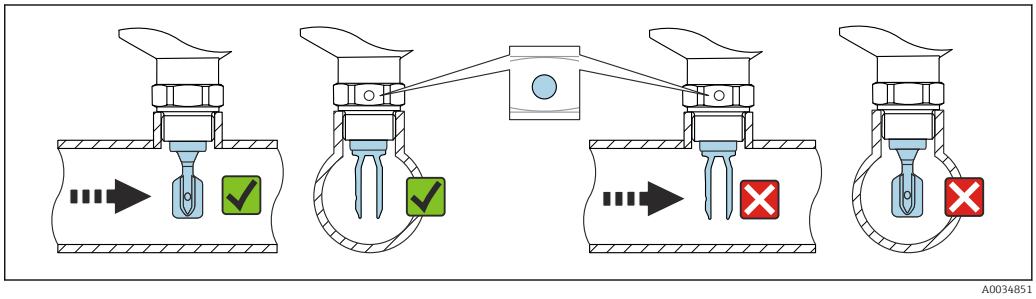

12 Installation in pipes (take fork position and marking into consideration)

Screwing in the device

- Turn by the hex bolt only, 15 to 30 Nm (11 to 22 lbf ft)
- Do not turn at the housing!

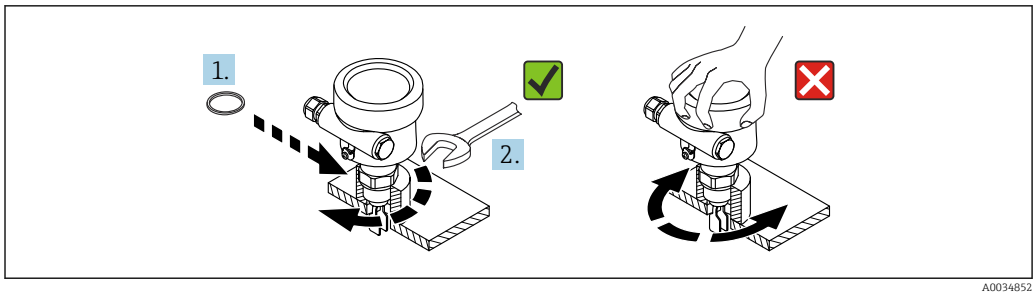

13 *Screwing in the device*

Aligning the cable entry

All housings can be aligned. Forming a drip loop on the cable prevents moisture from entering the housing.

Housing without set screw

The device housing can be rotated up to 350°.

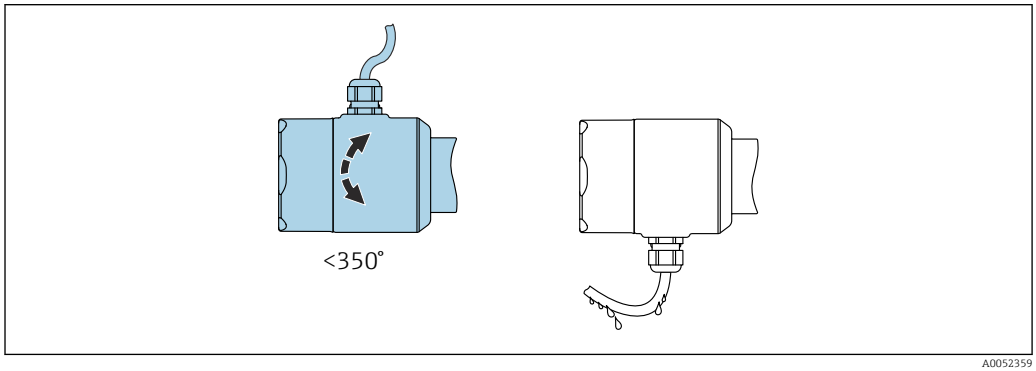

14 *Housing without set screw; form a drip loop on the cable.*

Housing with locking screw

NOTICE

The locking screw is not sufficiently tightened when the device is delivered.
The housing may rotate and become loose due to vibration.
- Tighten the locking screw to 3.5 Nm (2.58 lbf ft).

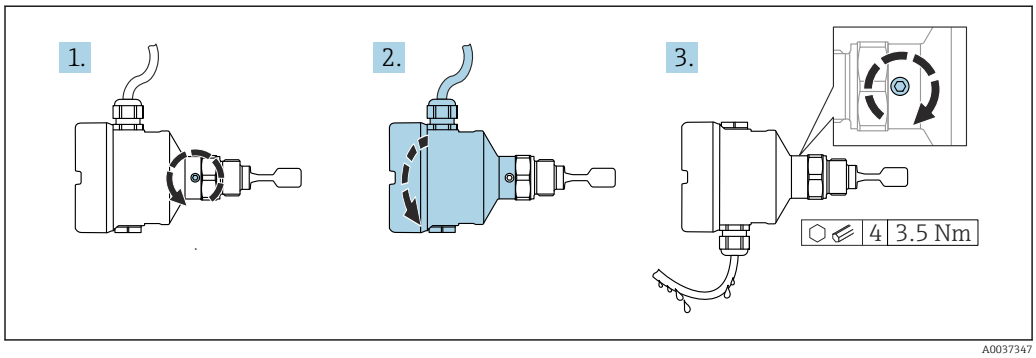

15 *Housing with external locking screw; form a drip loop on the cable*

1. Loosen the external locking screw (maximum 1.5 turns).
2. Turn the housing and align the cable entry.
3. Tighten the external locking screw.

Rotating the housing

The housing can be rotated up to 380° by loosening the locking screw.

NOTICE

The housing cannot be completely unscrewed.

- ▶ Loosen the external locking screw by a maximum of 1.5 turns. If the screw is turned further or completely removed (beyond the screw lifting point), small parts (counter disk) may become loose and fall out.
- ▶ Tighten the locking screw (hex socket 4 mm (0.16 in)) to 3.5 Nm (2.58 lbf ft) ±0.3 Nm (±0.22 lbf ft).

Closing the housing covers

NOTICE

Thread and housing cover damaged from dirt and fouling!

- ▶ Remove dirt (e.g. sand) on the thread of the covers and housing.
- ▶ If you continue to encounter resistance when closing the cover, check the thread again for fouling.

Housing thread

The threads of the electronics and connection compartment can be coated with an anti-friction coating.
The following applies for all housing materials:
☒ **Do not lubricate the housing threads.**

5.3 Post-mounting check

❑ Is the device undamaged (visual inspection)?

❑ Are the measuring point number and labeling correct (visual inspection)?

❑ Is the device adequately protected from precipitation and direct sunlight?

❑ Is the device properly secured?

❑ Does the device comply with the measuring point specifications?

For example:
- Process temperature
- Process pressure
- Ambient temperature
- Measuring range

6 Electrical connection

6.1 Required tool

- Screwdriver for electrical connection
- Allen key for screw of cover lock

6.2 Connecting requirements

6.2.1 Cover with securing screw

The cover is locked by a securing screw in devices for use in hazardous areas with a certain type of explosion protection.

NOTICE

If the securing screw is not positioned correctly, the cover cannot provide secure sealing.

- Open the cover: slacken the screw of the cover lock with a maximum of 2 turns so that the screw does not fall out. Fit the cover and check the cover seal.
- Close the cover: screw the cover securely onto the housing, making sure that the securing screw is positioned correctly. There should not be any gap between the cover and housing.

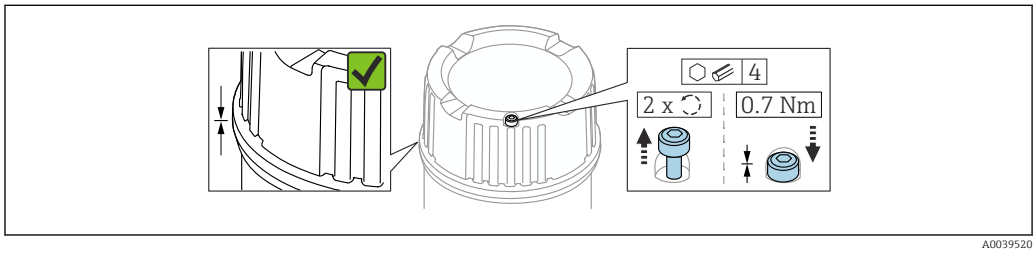

16 *Cover with securing screw*

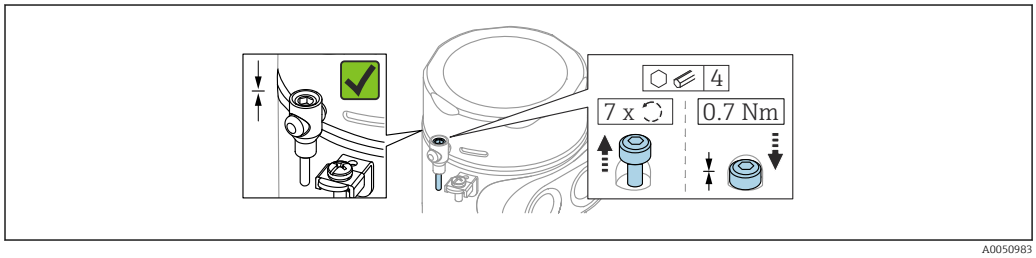

17 *Cover with securing screw; hygienic housing (only for dust explosion protection)*

6.2.2 Connecting protective earth (PE)

The protective earth conductor at the device must only be connected if the device's operating voltage is ≥ 35 V_{DC} or ≥ 16 V_{AC}eff.

When the device is used in hazardous areas, it must always be included in the potential equalization of the system, irrespective of the operating voltage.

The plastic housing is available with or without an external protective earth connection (PE). If the operating voltage of the electronic insert is < 35 V, the plastic housing has no external protective earth connection.

6.3 Connecting the device

Housing thread
The threads of the electronics and connection compartment can be coated with an anti-friction coating.
The following applies for all housing materials:
Do not lubricate the housing threads.

6.3.1 2-wire AC (electronic insert FEL61)

- Two-wire alternating current version
- Switches the load directly in the power supply circuit via an electronic switch; always connect in series with a load.
- Functional testing without level change
  A functional test can be performed on the device using the test button on the electronic insert.

Supply voltage

U = AC 19 to 253 V, 50 Hz/60 Hz

Residual voltage when switched through: typically 12 V

In accordance with IEC 61010-1: Provide a suitable circuit breaker for the device and limit the current to 1 A, e.g. by installing a 1 A fuse (slow-blow) in the phase (not the neutral conductor) of the supply circuit.

Power consumption

S ≤ 2 VA

Current consumption

Residual current when blocked: I ≤ 3.8 mA

The red LED flashes in the event of an overload or short-circuit. Check for an overload or short-circuit every 5 s. The test is deactivated after 60 s.

Load

- Load with a minimum holding power/rated power of 2.5 VA at 253 V (10 mA) or 0.5 VA at 24 V (20 mA)
- Load with a maximum holding power/rated power of 89 VA at 253 V (350 mA) or 8.4 VA at 24 V (350 mA)
- With overload and short-circuit protection

Behavior of output signal

- OK status: Load on (switched through)
- Demand mode: Load off (blocked)
- Alarm: Load off (blocked)

Terminals

Terminals for cable cross-section up to 2.5 mm^2 (14 AWG). Use ferrules for the wires.

Overvoltage protection

Overvoltage category II

Terminal assignment

Always connect an external load. The electronic insert has integrated short-circuit protection.

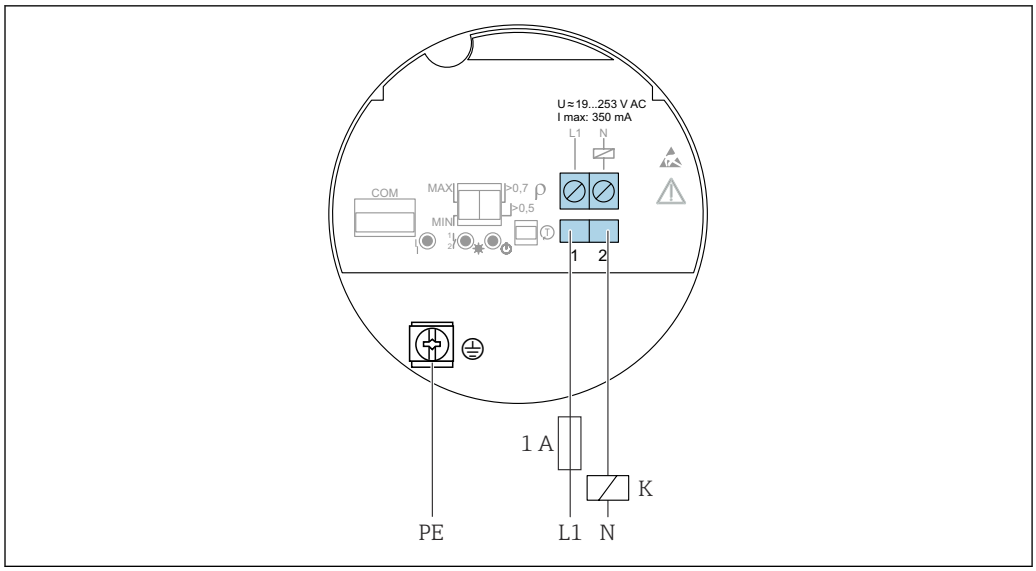

18 *2-wire AC, electronic insert FEL61*

Behavior of switch output and signaling

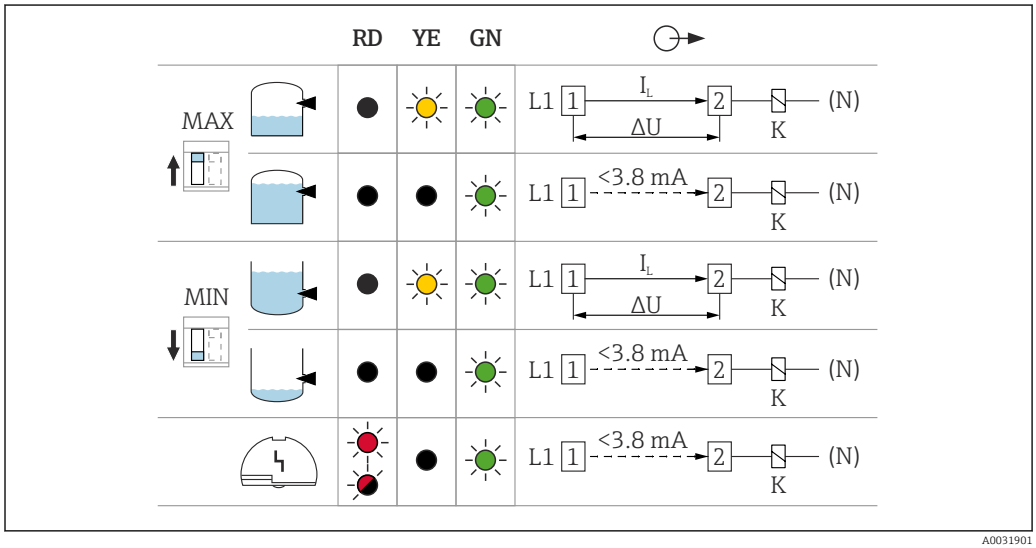

19 *Behavior of switch output and signaling, electronic insert FEL61*

MAX DIP switch for setting MAX safety mode
MIN DIP switch for setting MIN safety mode
RD LED red for warning or alarm
YE LED yellow, switch status
GN LED green, operational status, device on
I_L Load current switched through

Selection tool for relays

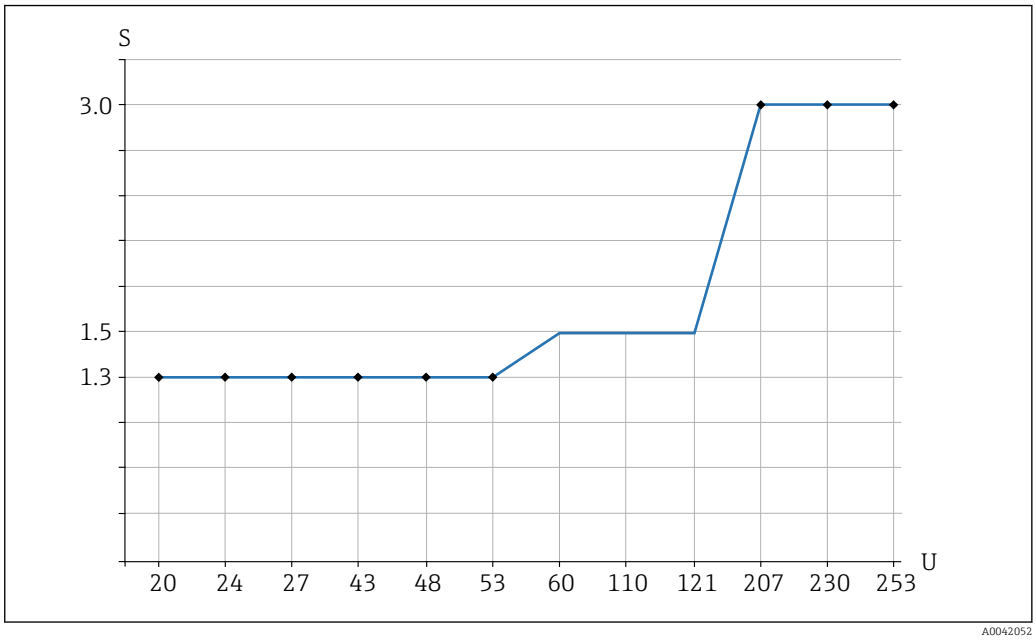

20 Recommended minimum holding power/rated power for load

S Holding power/rated power in [VA]
U Operating voltage in [V]

AC mode

- Operating voltage: 24 V, 50 Hz/60 Hz
- Holding power/rated power: > 0.5 VA, < 8.4 VA

- Operating voltage: 110 V, 50 Hz/60 Hz
- Holding power/rated power: > 1.1 VA, < 38.5 VA

- Operating voltage: 230 V, 50 Hz/60 Hz
- Holding power/rated power: > 2.3 VA, < 80.5 VA

6.3.2 3-wire DC PNP (electronic insert FEL62)

- Three-wire direct current version
- Preferably in conjunction with programmable logic controllers (PLC), DI modules as per EN 61131-2. Positive signal at switching output of electronics module (PNP)
- Functional testing without level change
  A functional test can be performed on the device using the test button on the electronic insert or using the test magnet (can be ordered as an option) with the housing closed.

Supply voltage

WARNING

Failure to use the prescribed power supply unit.
Risk of potentially life-threatening electric shock!
▶ The FEL62 may only be powered by devices with reliable galvanic isolation in accordance with IEC 61010-1.

U = 10 to 55 V_{DC}

The device must be powered by a voltage supply categorized as "CLASS 2" or "SELV".

Comply with the following according to IEC 61010-1: Provide a suitable circuit breaker for the device and limit the current to 500 mA, e.g. by installing a 0.5 A fuse (slow-blow) in the power supply circuit.

Power consumption

P ≤ 0.5 W

Current consumption

I ≤ 10 mA (without load)

The red LED flashes in the event of an overload or short-circuit. Check for an overload or short-circuit every 5 s.

Load current

I ≤ 350 mA with overload and short-circuit protection

Capacitance load

C ≤ 0.5 µF at 55 V, C ≤ 1.0 µF at 24 V

Residual current

I < 100 µA (for blocked transistor)

Residual voltage

U < 3 V (for switched through transistor)

Behavior of output signal

- OK status: Switched through
- Demand mode: Blocked
- Alarm: Blocked

Terminals

Terminals for cable cross-section up to 2.5 mm^2 (14 AWG). Use ferrules for the wires.

Overvoltage protection

Overvoltage category I

Terminal assignment

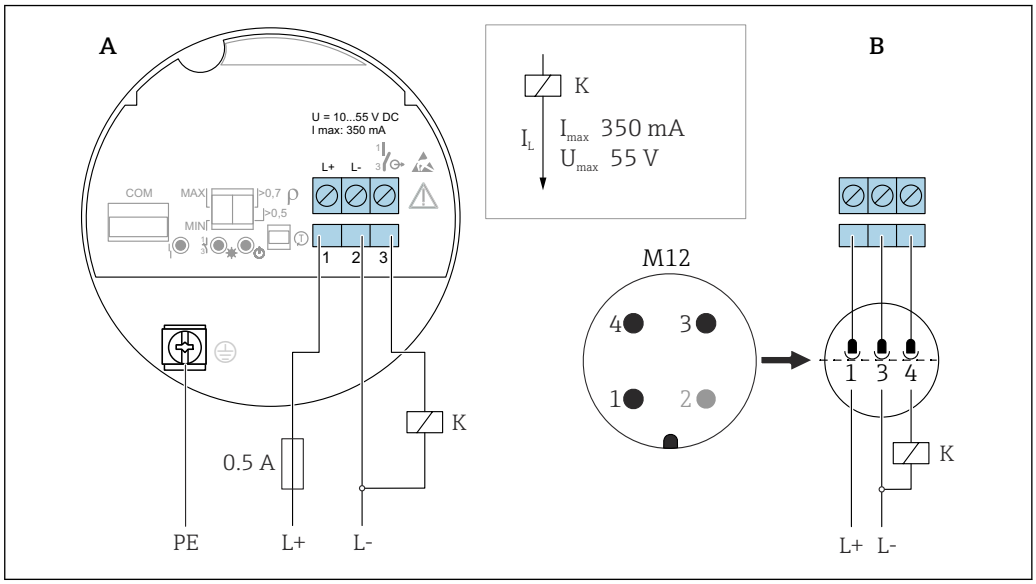

21 3-wire DC-PNP, electronic insert FEL62

A Connection wiring with terminals
B Connection wiring with M12 plug in housing according to EN61131-2 standard

Behavior of switch output and signaling

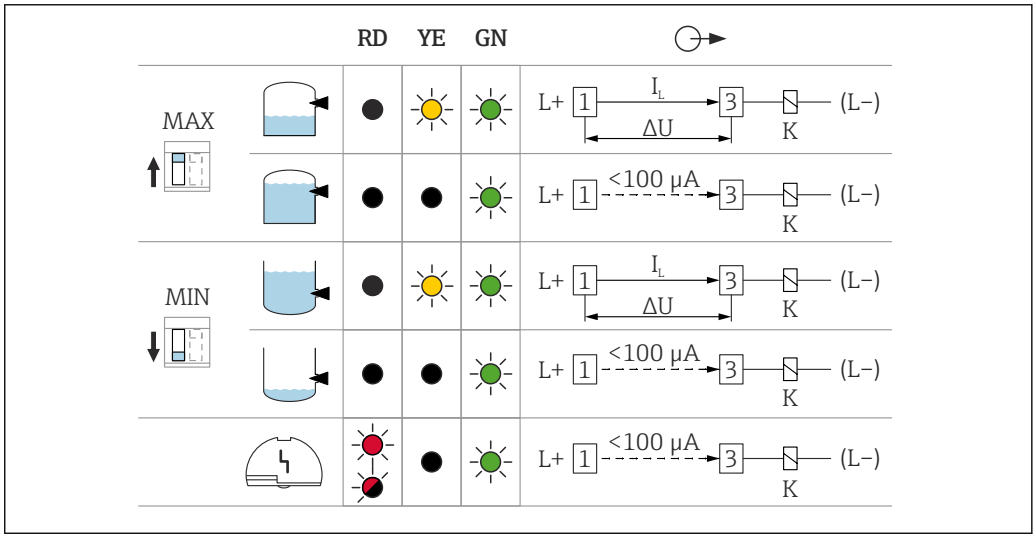

22 Behavior of switch output and signaling, electronic insert FEL62

MAX DIP switch for setting MAX safety mode
MIN DIP switch for setting MIN safety mode
RD LED red for warning or alarm
YE LED yellow, switch status
GN LED green, operational status, device on
I_L Load current switched through

6.3.3 Universal current connection with relay output (electronic insert FEL64)

- Switches the loads via two potential-free change-over contacts
- Two galvanically isolated change-over contacts (DPDT), both change-over contacts switch simultaneously
- Functional testing without level change. A functional test can be performed on the device using the test button on the electronic insert or using the test magnet (can be ordered as an option) with the housing closed.

WARNING

An error at the electronic insert can cause the permitted temperature for touch-safe surfaces to be exceeded. This presents a risk of burns.

▶ Do not touch the electronics in the event of an error!

Supply voltage

U = 19 to 253 V_{AC}, 50 Hz/60 Hz / 19 to 55 V_{DC}

Comply with the following according to IEC 61010-1: Provide a suitable circuit breaker for the device and limit the current to 500 mA, e.g. by installing a 0.5 A fuse (slow-blow) in the power supply circuit.

Power consumption

S < 25 VA, P < 1.3 W

Connectable load

Loads switched via two potential-free change-over contacts (DPDT)

- I_{AC} ≤ 6 A, U~ ≤ AC 253 V; P~ ≤ 1 500 VA, cos φ = 1, P~ ≤ 750 VA, cos φ > 0.7
- I_{DC} ≤ 6 A to DC 30 V, I DC ≤ 0.2 A to 125 V

Additional restrictions for the connectable load depend on the selected approval. Pay attention to the information in the Safety Instructions (XA).

According to IEC 61010, the following applies: Total voltage from relay outputs and auxiliary power supply ≤ 300 V.

Use electronic insert FEL62 DC PNP for small DC load currents, e.g. for connection to a PLC.

Relay contact material: Silver/nickel AgNi 90/10

When connecting a device with high inductance, provide a spark quenching unit to protect the relay contact. A fine-wire fuse (depending on the connected load) protects the relay contact in the event of a short-circuit.

Both relay contacts switch simultaneously.

Behavior of output signal

- OK status: Relay energized
- Demand mode: Relay de-energized
- Alarm: Relay de-energized

Terminals

Terminals for cable cross-section up to 2.5 mm^2 (14 AWG). Use ferrules for the wires.

Overvoltage protection

Overvoltage category II

Terminal assignment

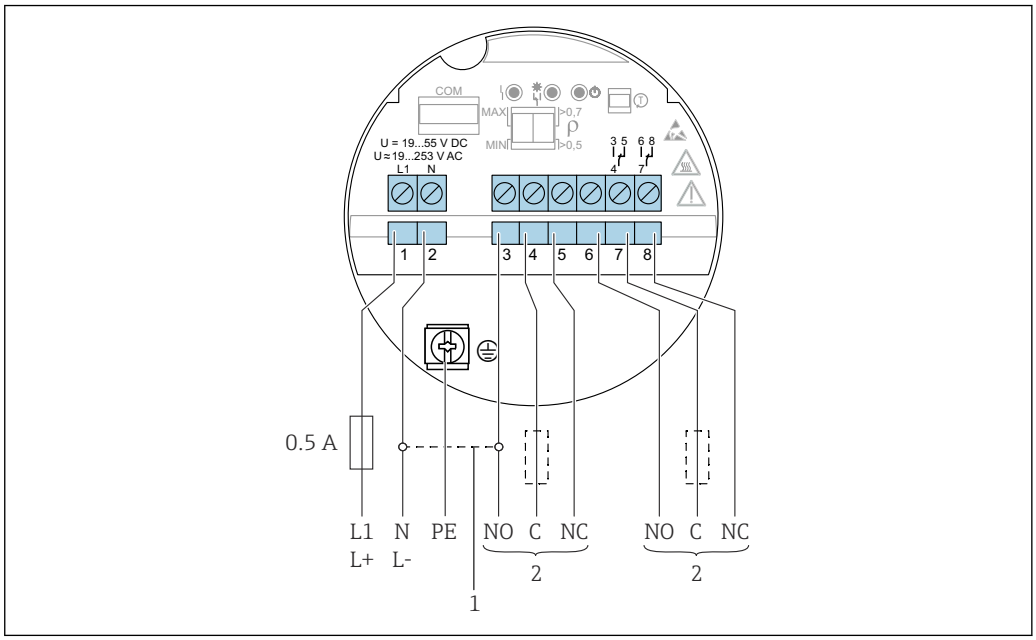

A0036062

23 *Universal current connection with relay output, electronic insert FEL64*

1 *When bridged, the relay output works with NPN logic*
2 *Connectable load*

Behavior of switch output and signaling

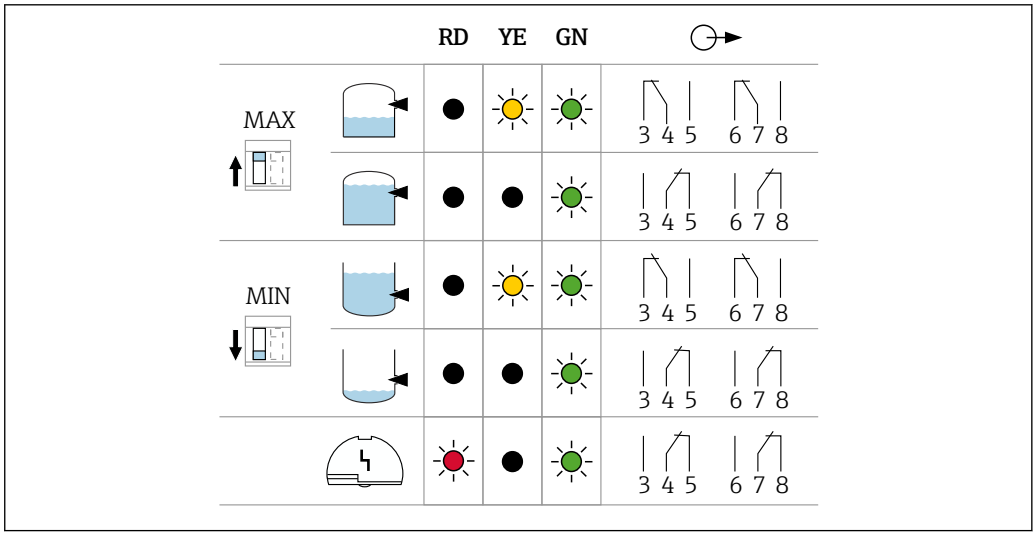

A0033513

24 *Behavior of switch output and signaling, electronic insert FEL64*

MAX DIP switch for setting MAX safety mode
MIN DIP switch for setting MIN safety mode
RD LED red for alarm
YE LED yellow, switch status
GN LED green, operational status, device on

6.3.4 Relay output DC connection (electronic insert FEL64 DC)

- Switches the loads via two potential-free change-over contacts
- Two galvanically isolated change-over contacts (DPDT), both change-over contacts switch simultaneously
- Functional testing without level change. A functional test can be performed on the entire device using the test button on the electronic insert or using the test magnet (can be ordered as an option) with the housing closed.

Supply voltage

U = DC 9 to 20 V

The device must be powered by a voltage supply categorized as "CLASS 2" or "SELV".

Comply with the following according to IEC 61010-1: Provide a suitable circuit breaker for the device and limit the current to 500 mA, e.g. by installing a 0.5 A fuse (slow-blow) in the power supply circuit.

Power consumption

P < 1.0 W

Connectable load

Loads switched via two potential-free change-over contacts (DPDT)

- I_{AC} ≤ 6 A, U~ ≤ AC 253 V; P~ ≤ 1 500 VA, cos φ = 1, P~ ≤ 750 VA, cos φ > 0.7
- I_{DC} ≤ 6 A to DC 30 V, I DC ≤ 0.2 A to 125 V

Additional restrictions for the connectable load depend on the selected approval. Pay attention to the information in the Safety Instructions (XA).

According to IEC 61010, the following applies: Total voltage from relay outputs and auxiliary power supply ≤ 300 V

Electronic insert FEL62 DC PNP preferred for small DC load currents, e.g. connection to a PLC.

Relay contact material: Silver/nickel AgNi 90/10

When connecting a device with high inductance, fit a spark quenching unit to protect the relay contact. A fine-wire fuse (depending on the connected load) protects the relay contact in the event of a short-circuit.

Behavior of output signal

- OK status: Relay energized
- Demand mode: Relay de-energized
- Alarm: Relay de-energized

Terminals

Terminals for cable cross-section up to 2.5 mm^2 (14 AWG). Use ferrules for the wires.

Overvoltage protection

Overvoltage category I

Terminal assignment

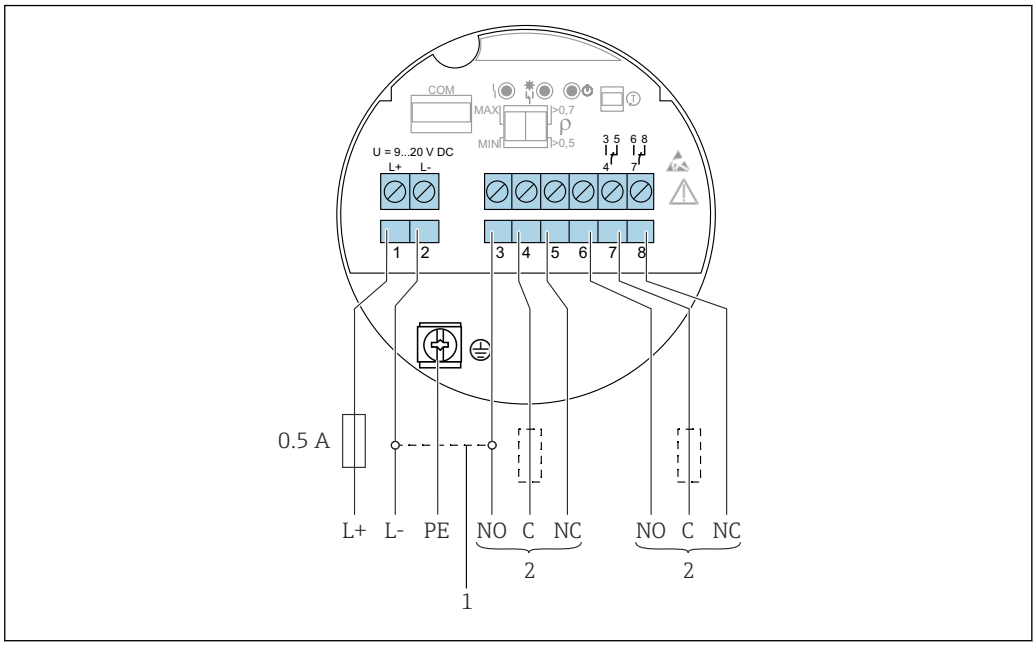

A0037685

25 *DC connection with relay output, electronic insert FEL64 DC*

1 *When bridged, the relay output works with NPN logic*
2 *Connectable load*

Behavior of switch output and signaling

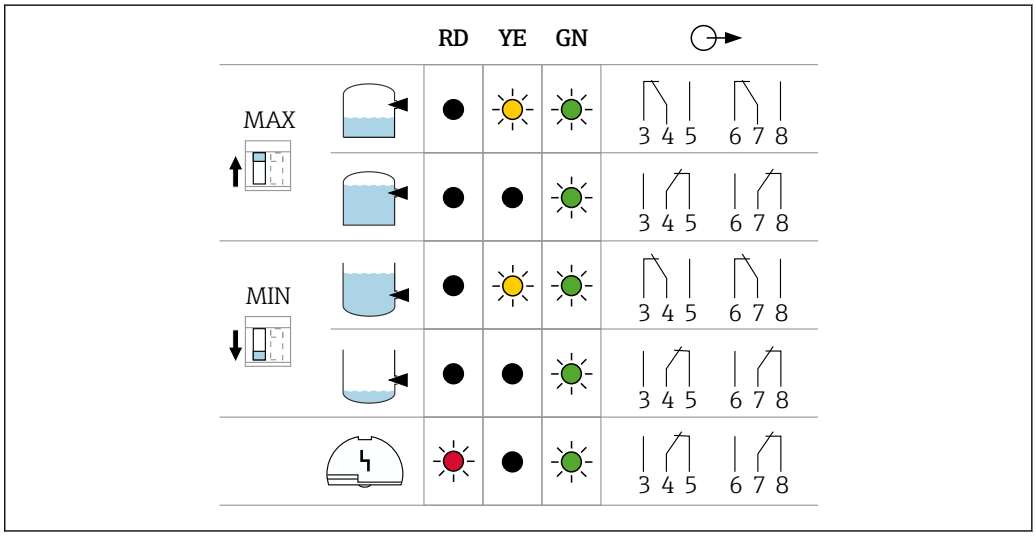

A0033513

26 *Behavior of switch output and signaling, electronic insert FEL64 DC*

MAX DIP switch for setting MAX safety mode
MIN DIP switch for setting MIN safety mode
RD LED red for alarm
YE LED yellow, switch status
GN LED green, operational status, device on

6.3.5 PFM output (electronic insert FEL67)

- For connection to Endress+Hauser Nivotester switching units FTL325P and FTL375P
- PFM signal transmission; pulse frequency modulation, superimposed on the power supply along the two-wire cabling
- Functional testing without level change:
  - A functional test can be performed on the device using the test button on the electronic insert.
  - The functional test can also be prompted by disconnecting the supply voltage or triggered directly by the Nivotester FTL325P and FTL375P switching unit.

Supply voltage

U = DC 9.5 to 12.5 V_{DC}

The device must be powered by a voltage supply categorized as "CLASS 2" or "SELV".

Comply with the following according to IEC 61010-1: Provide a suitable circuit breaker for the device.

Power consumption

P ≤ 150 mW with Nivotester FTL325P or FTL375P

Behavior of output signal

- OK status: MAX mode of operation 150 Hz, MIN mode of operation 50 Hz
- Demand mode: MAX mode of operation 50 Hz, MIN mode of operation 150 Hz
- Alarm: MAX/MIN mode of operation 0 Hz

Terminals

Terminals for cable cross-section up to 2.5 mm^2 (14 AWG). Use ferrules for the wires.

Overvoltage protection

Overvoltage category I

Terminal assignment

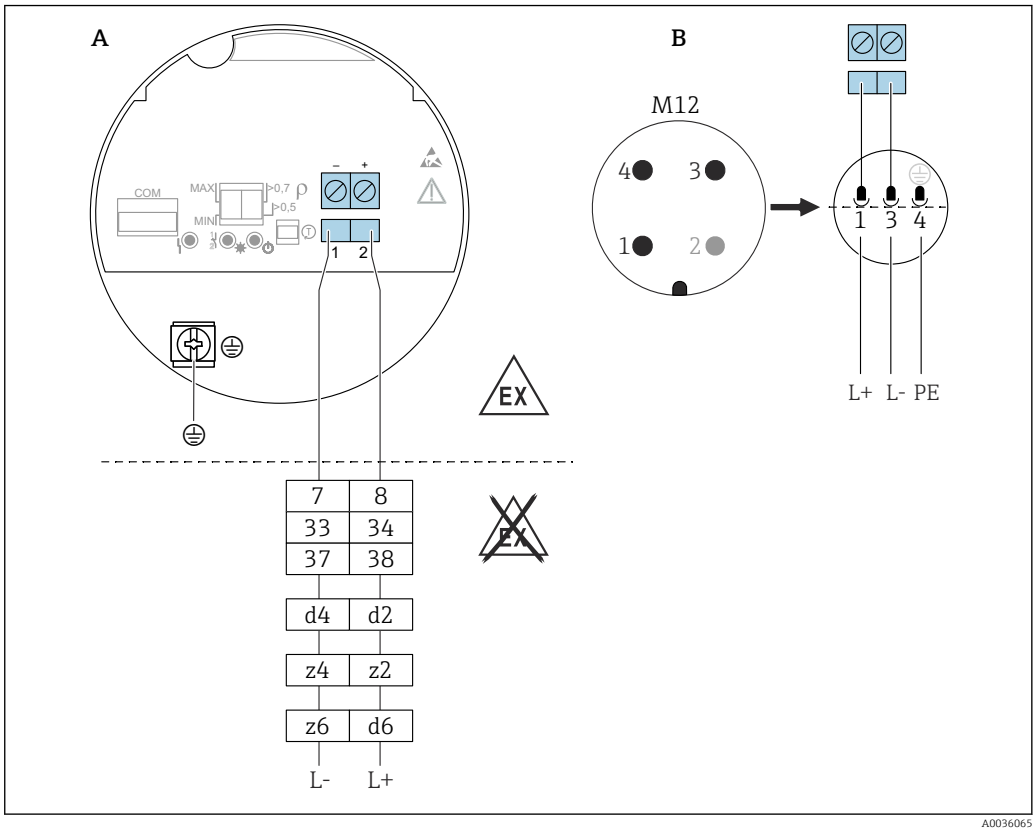

27 *PFM output, electronic insert FEL67*

A Connection wiring with terminals
B Connection wiring with M12 plug in housing according to EN61131-2 standard
7/ 8: Nivotester FTL325P 1 CH, FTL325P 3 CH input 1
33/ 34: Nivotester FTL325P 3 CH input 2
37/ 38: Nivotester FTL325P 3 CH input 3
d4/ d2: Nivotester FTL375P input 1
z4/ z2: Nivotester FTL375P input 2
z6/ d6: Nivotester FTL375P input 3

Connection cable

- Maximum cable resistance: 25 Ω per core
- Maximum cable capacitance: < 100 nF
- Maximum cable length: 1 000 m (3 281 ft)

Behavior of switch output and signaling

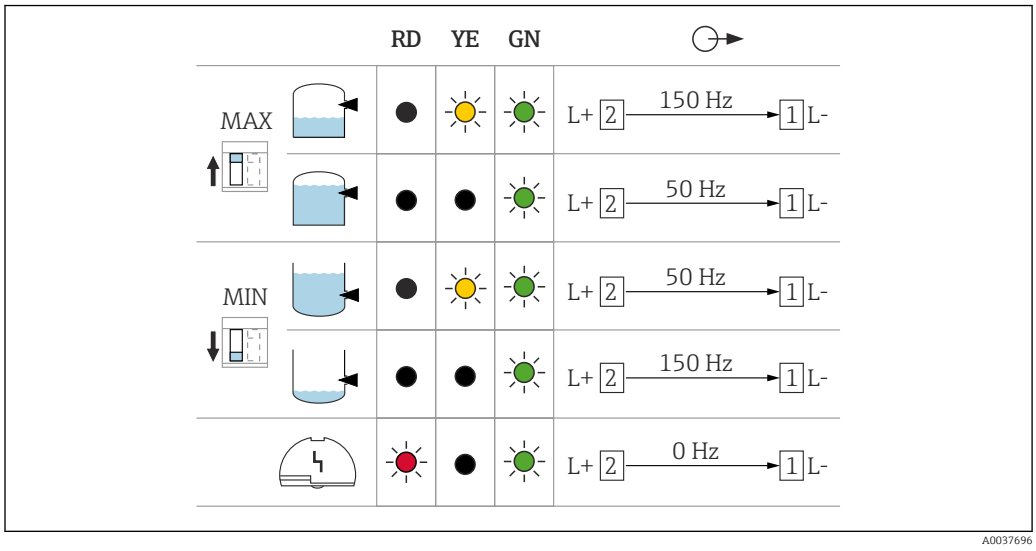

28 Switching behavior and signaling, electronic insert FEL67

MAX DIP switch for setting MAX safety mode
MIN DIP switch for setting MIN safety mode
RD LED red for alarm
YE LED yellow, switch status
GN LED green, operational status, device on

The switches for MAX/MIN on the electronic insert and the FTL325P switching unit must be set according to the application. Only then is it possible to perform the functional test correctly.

6.3.6 2-wire NAMUR > 2.2 mA/< 1.0 mA (electronic insert FEL68)

- To connect to isolating amplifiers according to NAMUR (IEC 60947-5-6), e.g. Nivotester FTL325N from Endress+Hauser
- To connect to isolating amplifiers of third-party suppliers according to NAMUR (IEC 60947-5-6), a permanent power supply for electronic insert FEL68 must be ensured.
- Signal transmission H-L edge 2.2 to 3.8 mA/0.4 to 1.0 mA according to NAMUR (IEC 60947-5-6) on two-wire cabling
- Functional testing without level change. A functional test can be performed on the device using the test button on the electronic insert or using the test magnet (can be ordered as an option) with the housing closed.
  The functional test can also be triggered by interrupting the supply voltage or activated directly from the Nivotester FTL325N.

Supply voltage

U = DC 8.2 V ±10 %

The device must be powered by a voltage supply categorized as "CLASS 2" or "SELV".

Comply with the following according to IEC 61010-1: Provide a suitable circuit breaker for the device.

Power consumption

NAMUR IEC 60947-5-6

< 6 mW with I < 1 mA; < 38 mW with I = 3.5 mA

Connection data interface

NAMUR IEC 60947-5-6

Behavior of output signal

- OK status: Output current 2.2 to 3.8 mA
- Demand mode: Output current 0.4 to 1.0 mA
- Alarm: Output current < 1.0 mA

Terminals

Terminals for cable cross-section up to 2.5 mm^2 (14 AWG). Use ferrules for the wires.

Overvoltage protection

Overvoltage category I

Terminal assignment

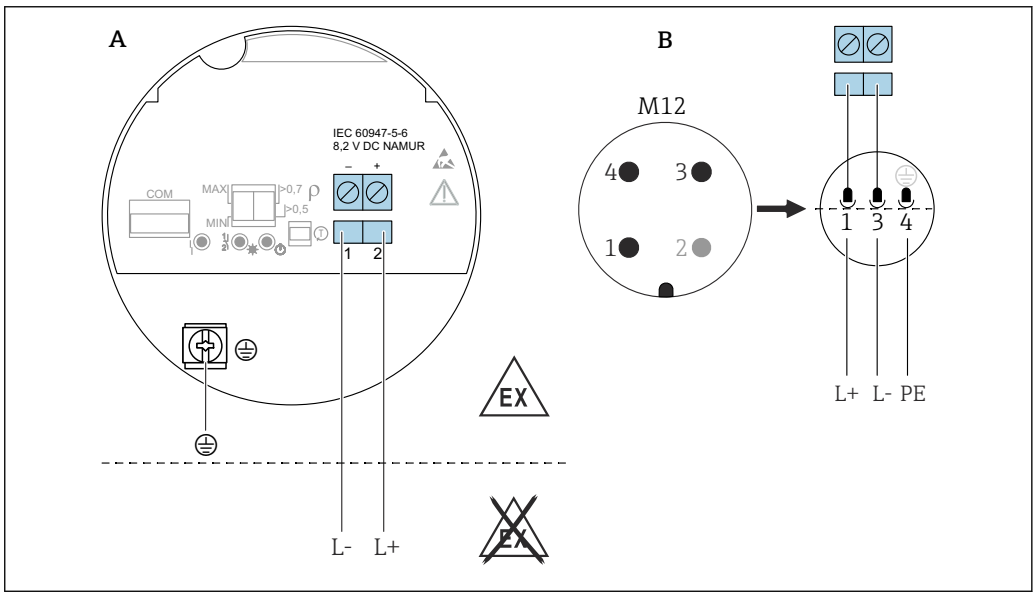

29 2-wire NAMUR ≥ 2.2 mA/≤ 1.0 mA, electronic insert FEL68

A Connection wiring with terminals
B Connection wiring with M12 plug in housing according to EN61131-2 standard

Behavior of switching output and signaling

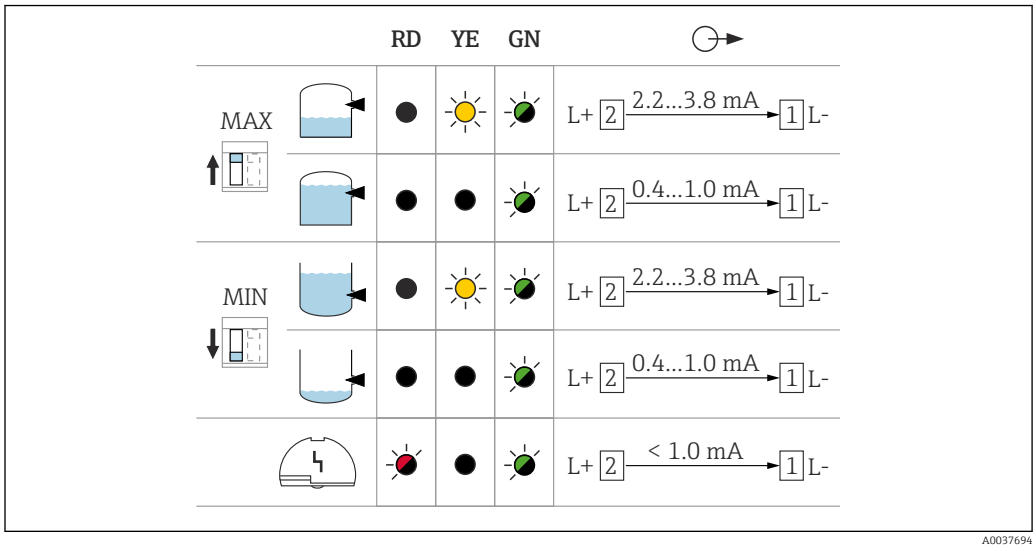

30 Behavior of switching output and signaling, electronic insert FEL68

MAX DIP switch, for setting MAX safety mode
MIN DIP switch, for setting MIN safety mode
RD Red LED, for alarm
YE Yellow LED, for switch status
GN Green LED, for operational status, device on

The yellow LED is disabled if the Bluetooth® module is connected.

The Bluetooth® module for use in conjunction with electronic insert FEL68 (2-wire NAMUR) must be ordered separately with the required battery.

6.3.7 LED module VU120 (optional)

Supply voltage

U = 12 to 55 V_{DC},

U = 19 to 253 V_{AC}, 50 Hz/60 Hz

Power consumption

P ≤ 0.7 W, S < 6 VA

Current consumption

I_{max} = 0.4 A

Connecting the LED module

In the case of devices for use in the hazardous area with a certain type of protection, the cover is sealed by a securing screw.
For more details, see the "Cover with securing screw" section.

- Required tools: crimper, flat-blade screwdriver
- Use the wire end ferrules supplied

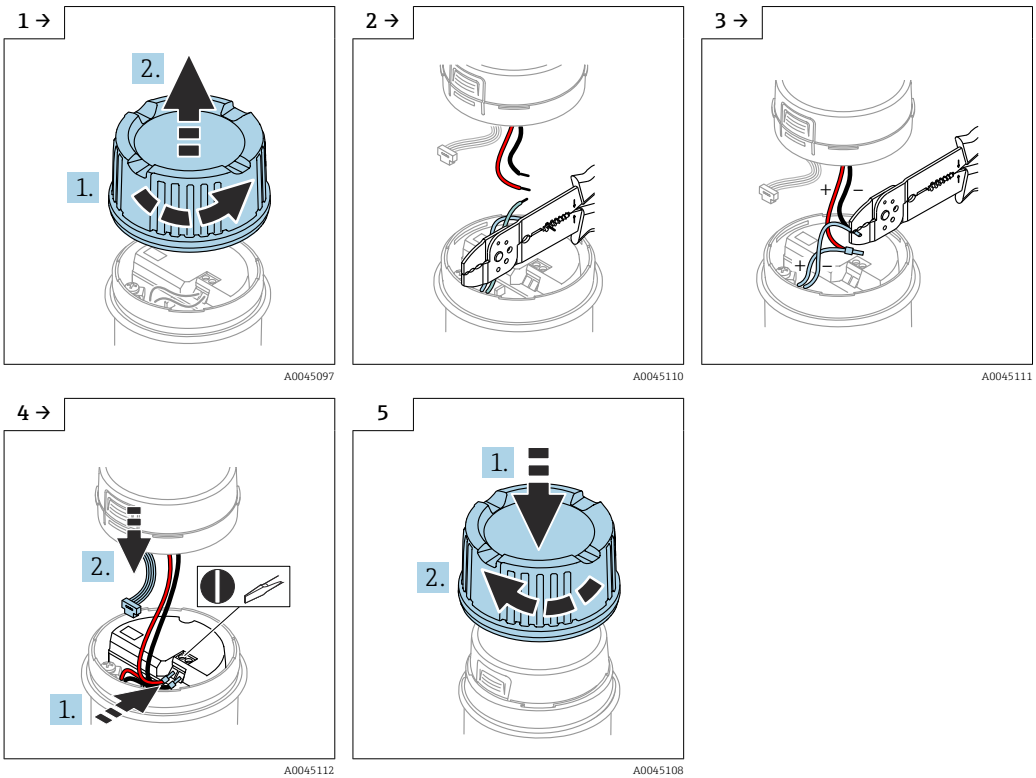

Signaling of operational status

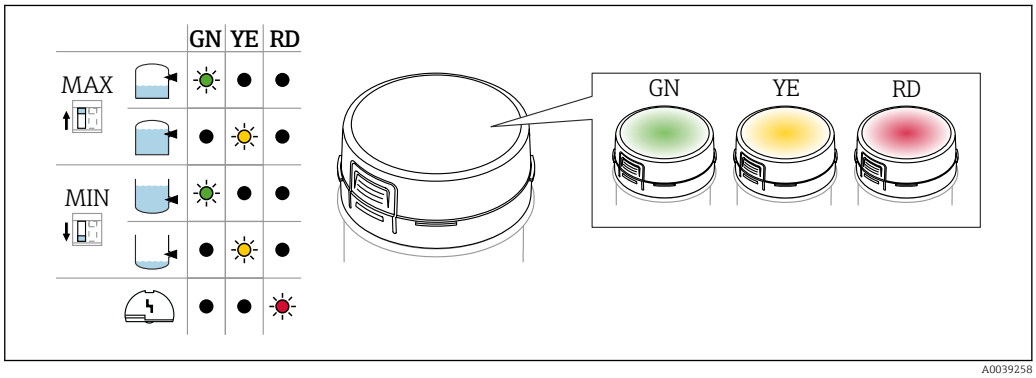

31 *LED module, the LED lights up in green (GN), yellow (YE) or red (RD)*

A brightly lit LED indicates the operational status (switch status or alarm status). The LED module can be connected to the following electronic inserts: FEL62, FEL64, FEL64DC.

All 3 colors of the LED flash one after another as a chaser light during the functional test.

6.3.8 Bluetooth® module VU121 (optional)

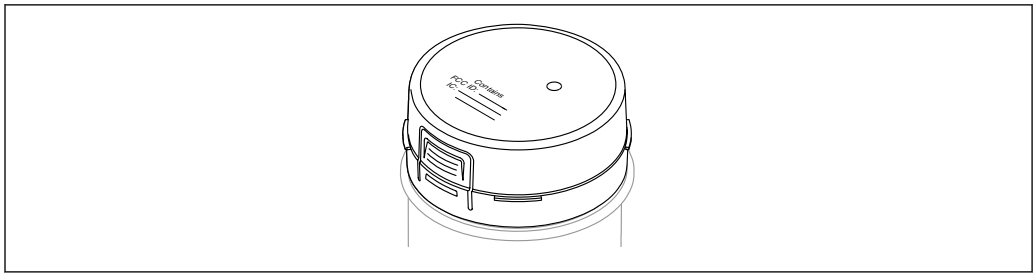

A0039257

32 *Bluetooth® module VU121*

- The Bluetooth® module can be connected via the COM interface to the following electronic inserts: FEL61, FEL62, FEL64, FEL64 DC, FEL67, FEL68 (2-wire NAMUR).
- The Bluetooth® module is only available in conjunction with the Heartbeat Verification + Monitoring application package.
- The Bluetooth® module with battery is suitable for use in hazardous areas.
- In conjunction with electronic insert FEL68 (2-wire NAMUR), the Bluetooth® module must be ordered separately with the required battery.
- The yellow LED on electronic insert FEL68 is disabled if the Bluetooth® module is connected.

Batteries – use and handling

For energy-related reasons, Bluetooth® module VU121 requires a special battery when operated with electronics insert FEL68 (2-wire NAMUR).

The battery is categorized as dangerous goods when transported by air and must not be installed in the device when shipped.

Replacement batteries can be purchased from a specialist retailer.

Replacement batteries

Only the following types of AA 3.6 V lithium batteries made by the manufacturers listed below are suitable as replacement batteries:
- SAFT LS14500
- TADIRAN SL-360/s
- XENOENERGY XL-060F

Isolation lug in battery compartment

NOTICE

Premature discharge of the battery due to removing the isolation lug
Removing the isolation lug from the battery compartment of the Bluetooth® module will cause the battery to be discharged prematurely, regardless of the sensor power supply.
- ▶ The isolation lug must remain in the battery compartment of the Bluetooth® module for as long as the sensors are in storage.

Operating life

- If the batteries are discharged, a Bluetooth® connection is no longer possible
- At ambient temperatures from +10 to +40 °C (+50 to +104 °F), the service life of the Bluetooth® module without replacing the battery is at least five years with a maximum of 60 downloads of complete datasets.
  Requirement: The sensor is 99% in the OK status (demand mode requires increased power consumption)
  The battery life is based on a scenario where the sensor is connected and powered.

Replacing the battery

- Before replacing the battery, the Bluetooth® module must be disconnected from electronic insert FEL68.
  - ↳ Only then will the battery status display be detected correctly.

Connecting the Bluetooth® module

The cover is locked by a securing screw in devices for use in hazardous areas with a certain type of explosion protection.
For more details, see the "Cover with securing screw" section.

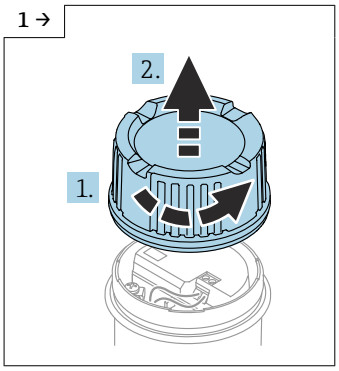

A0045097

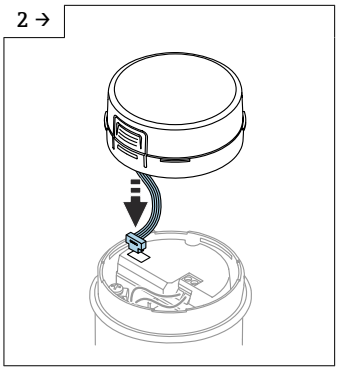

A0045106

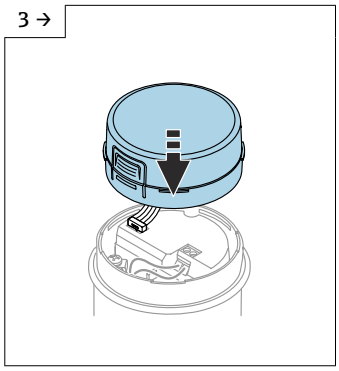

A0045107

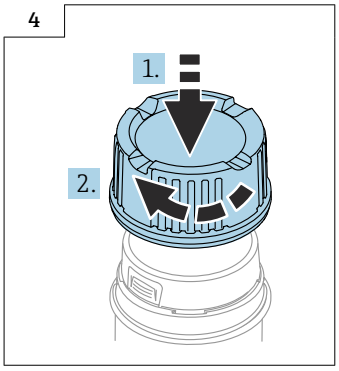

A0045108

6.3.9 Connecting the cable

Required tools

- Flat-blade screwdriver (0.6 mm x 3.5 mm) for terminals
- Suitable tool with width across flats AF24/25 (8 to 12 Nm (5.9 to 8.85 lbf ft)) for M20 coupling

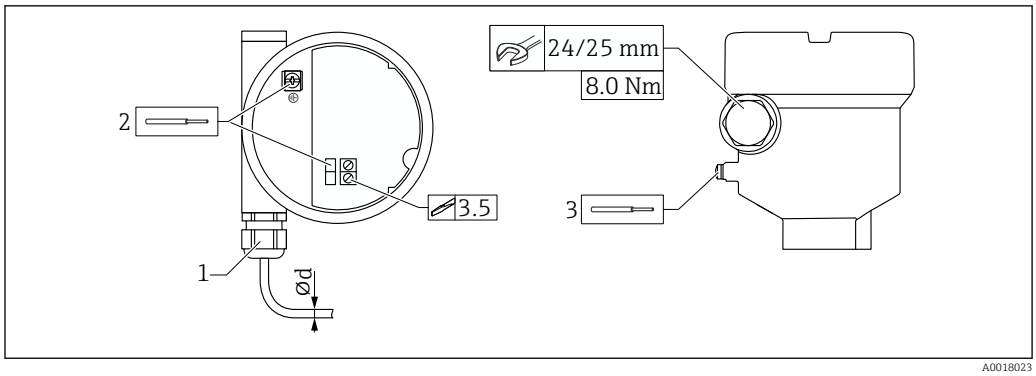

33 Example of coupling with cable entry, electronic insert with terminals

1 M20 coupling (with cable entry), example
2 Maximum conductor cross-section 2.5 mm² (AWG14), ground terminal inside the housing + terminals on the electronics
3 Maximum conductor cross-section 4.0 mm² (AWG12), ground terminal on outside of the housing (example: Plastic housing with outer protective ground connection (PE))
Ød Nickel-plated brass 7 to 10.5 mm (0.28 to 0.41 in)
Plastic 5 to 10 mm (0.2 to 0.38 in)
Stainless steel 7 to 12 mm (0.28 to 0.47 in)
Hygienic stainless steel 7 to 10 mm (0.28 to 0.39 in)

Pay attention to the following when using the M20 coupling
After inserting the cable:
- Counter-tighten the coupling
- Tighten the cap nut of the coupling:
  - To a torque of 8 Nm (5.9 lbf ft) for a coupling made of nickel-plated brass, plastic or stainless steel
  - To a torque of 8 to 12 Nm (5.9 to 8.85 lbf ft) for a coupling made of hygienic stainless steel until the sealing ring fills the space between the cap nut and the cable
- For devices with a second coupling: Screw the supplied coupling into the housing and tighten it:
  - To a torque of 3.75 Nm (2.77 lbf ft) for a coupling made of nickel-plated brass, plastic or stainless steel
  - To a torque of 12 Nm (8.85 lbf ft) for a coupling made of hygienic stainless steel

6.4 Post-connection check

- ❑ Is the device or cable undamaged (visual inspection)?
- ❑ Do the cables used comply with the requirements?
- ❑ Do the mounted cables have adequate strain relief?
- ❑ Are the cable glands mounted and firmly tightened?
- ❑ Does the supply voltage match the information on the nameplate?
- ❑ No reverse polarity, is terminal assignment correct?
- ❑ If supply voltage is present, is the green LED lit?
- ❑ Are all the housing covers installed and tightened?
- ❑ Optional: Is the cover tightened with securing screw?

7 Operation options

7.1 Overview of operation options

7.1.1 Operation concept

- Operation with button and DIP switches on the electronic insert
- Display with optional Bluetooth® module and SmartBlue app via Bluetooth® wireless technology
- Indication of the operational status (switch status or alarm status) with optional LED module (signal lights visible from the outside)
  Observe approvals for plastic housing, aluminum housing and stainless steel housing in hygienic applications (combined with DC PNP (electronic insert FEL62) and relay electronics (electronic inserts FEL64, FEL64DC)

7.1.2 Elements on the electronic insert

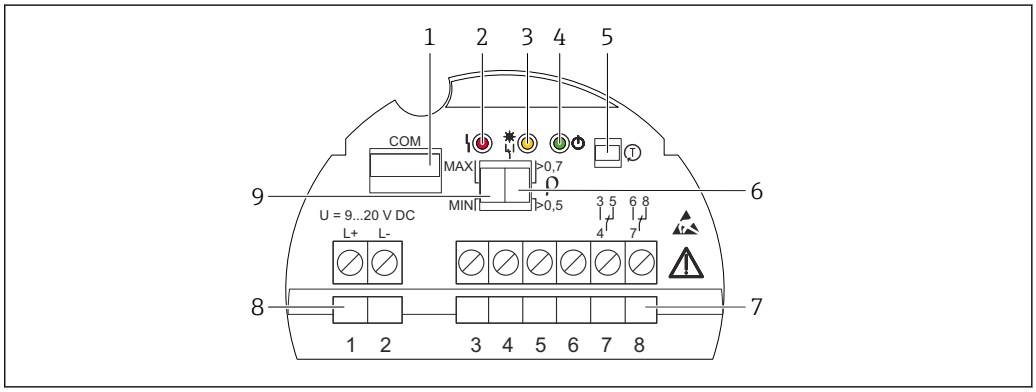

34 *Example of electronic insert FEL64DC*

1 *COM interface for additional modules (LED module, Bluetooth® module)*
2 *Red LED, for warning or alarm*
3 *Yellow LED, for switch status*
4 *Green LED, for operational status (device on)*
5 *Test button, for activating function test*
6 *DIP switch, for setting density 0.7 or 0.5*
7 *Terminals (3 to 8), for relay contact*
8 *Terminals (1 to 2), for power supply*
9 *DIP switch, for configuring MAX/MIN safety mode*

7.1.3 Heartbeat Technology with Bluetooth® wireless technology

Access via Bluetooth® wireless technology

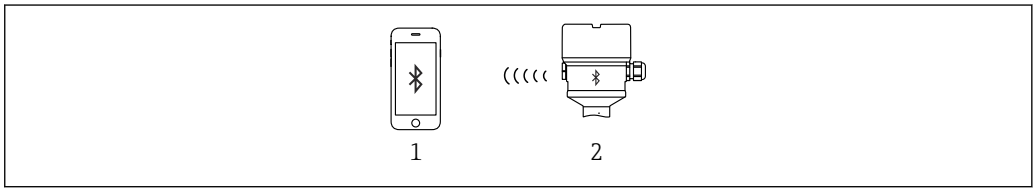

35 *Remote operation via Bluetooth® wireless technology*

1 *Smartphone or tablet with SmartBlue app*
2 *Device with optional Bluetooth® module*

Bluetooth® module VU121 (optional)

Functions

- Connection via COM interface: Bluetooth® module for device diagnostics via a smartphone app or tablet app
- Indication of the battery status via app when used with electronic insert FEL68 (NAMUR)
- Guidance via the **SIL/WHG Prooftest** wizard
- visible in the live list 10 s after the Bluetooth® search commences
- Data can be read out of the Bluetooth® module 60 s after the supply voltage is switched on
- Display of the current oscillation frequency and the switch status of the device

The yellow LED flashes when the Bluetooth® module is connected to another Bluetooth® device, e.g. cell phone.

Heartbeat Technology modules

Heartbeat Technology comprises 3 modules. These three modules combined check, evaluate and monitor device functionality and process conditions.

- Heartbeat Diagnostics
- Heartbeat Verification
- Heartbeat Monitoring

7.1.4 LED module VU120 (optional)

Depending on the MAX/MIN setting, an LED indicates the operational status (switch status or alarm status) in green, yellow and red. The LED is lit very brightly and is clearly visible from a large distance.

Connection to the following electronic inserts: FEL62, FEL64, FEL64 DC.

For more details, see the "Electrical connection" section.

8 Commissioning

8.1 Post-installation and function check

Before commissioning the measuring point, check whether the post-installation and post-connection checks have been performed.

Post-mounting check

Post-connection check

8.2 Functional test using button on electronic insert

- The functional test must be performed in the OK status: MAX safety and sensor free or MIN safety and sensor covered.
- The LEDs flash one after another as a chaser light during the functional test.
- When performing the proof test in safety instrumented systems according to SIL or WHG: Comply with the instructions in the Safety Manual.

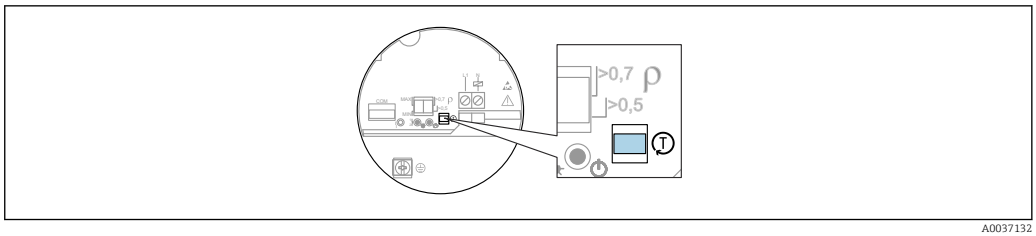

36 *Button for functional test (electronic inserts FEL61/62/64/64DC/67/68)*

1. Make sure that no unintended switching operations are triggered!
2. Press the "T" button on the electronic insert for at least 1 s (e.g. with a screwdriver).
   ↳ The device functional test is performed. The output changes from the OK status to demand mode.
   Duration of the functional test: At least 10 s or if the button is pressed for > 10 s, the test lasts until the test button is released.

The device returns to normal measurement operation if the internal test is successful.

If the housing may not be opened during operation due to explosion protection requirements, e.g. Ex d/XP, the functional test can also be started from the outside with the test magnet (optionally available), (FEL62, FEL64, FEL64DC, FEL68).

The functional test of the PFM electronics (FEL67) and NAMUR electronics (FEL68) can be started at the Nivotester FTL325P/N.

For further details, see the section "Functional test of the electronic switch with a test magnet".

8.2.1 FEL61 switching behavior and signaling

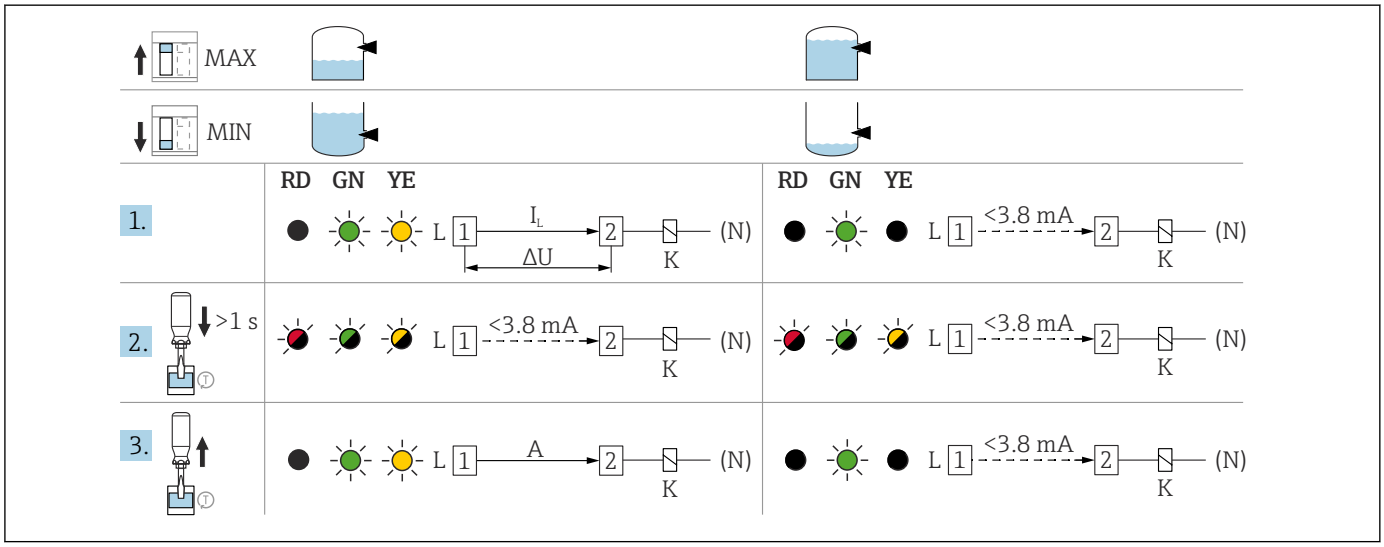

37 *FEL61 switching behavior and signaling*

A *After the test button is pressed, the load is switched off for at least 10 s (I < 3.8 mA) even if the button is pressed for < 10 s. If the test button is pressed for > 10 s the load remains switched off (I < 3.8 mA) until the test button is released. The load is then switched on again.*

8.2.2 FEL62 switching behavior and signaling

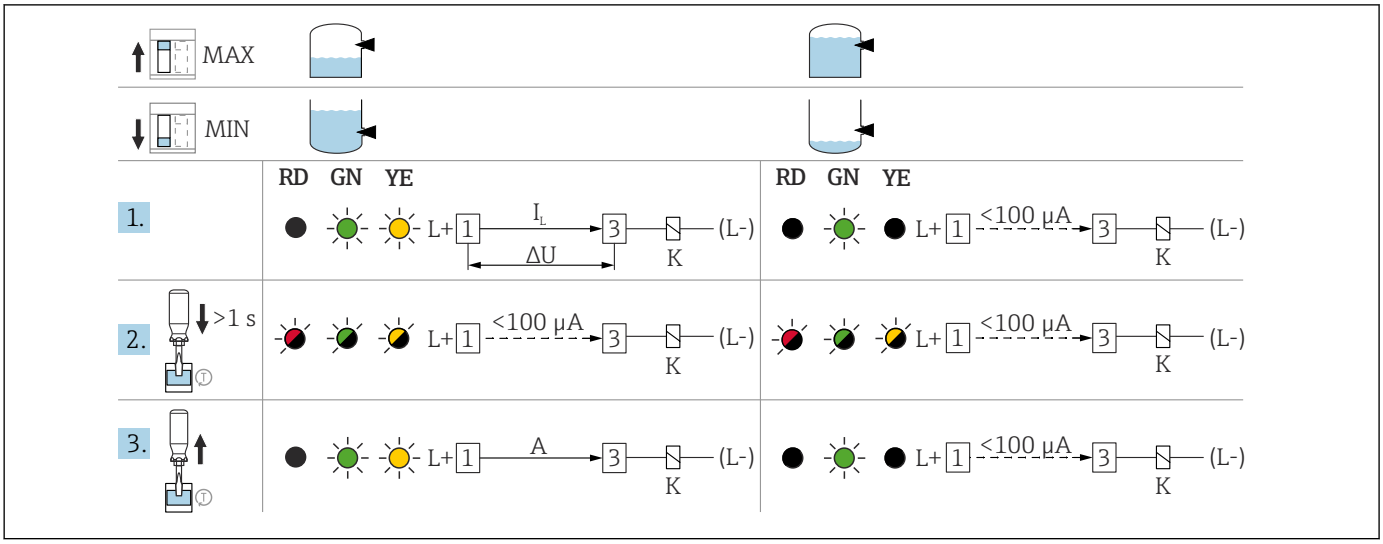

38 *FEL62 switching behavior and signaling*

A *After the test button is pressed, the DC-PNP output is switched off for at least 10 s (I < 100 µA) even if the button is pressed for < 10 s. If the test button is pressed for > 10 s, the DC-PNP output remains switched off (I < 100 µA) until the test button is released. The DC-PNP output is then switched on again.*

8.2.3 FEL64, FEL64DC switching behavior and signaling

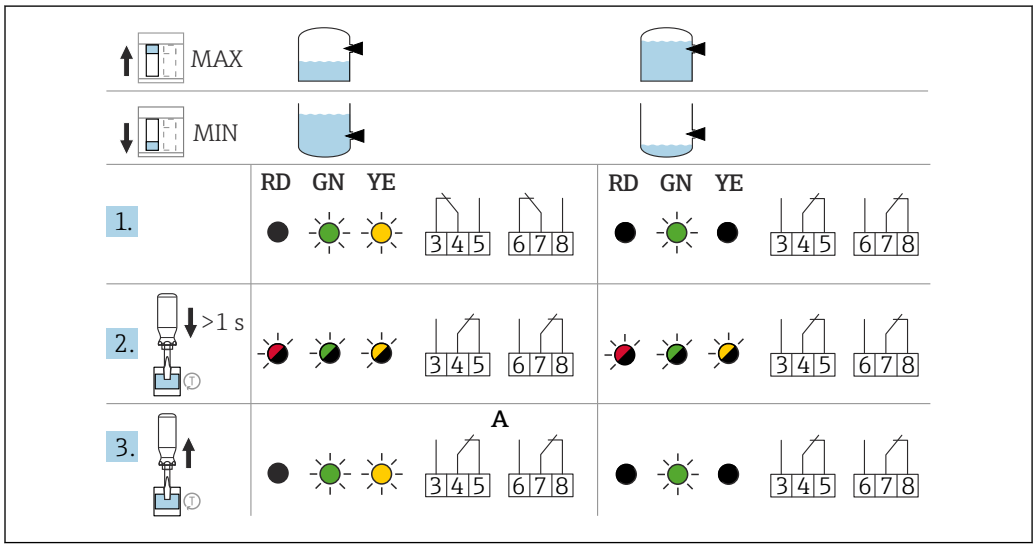

39 *FEL64, FEL64DC switching behavior and signaling*

A *After the test button is pressed, the relay is de-energized for at least 10 s even if the button is pressed for < 10 s. If the test button is pressed for > 10 s, the relay remains de-energized until the test button is released. The relay is then energized again.*

8.2.4 FEL67 switching behavior and signaling

A distinction must be made between MAX and MIN operating modes in the case of the FEL67 electronic insert!

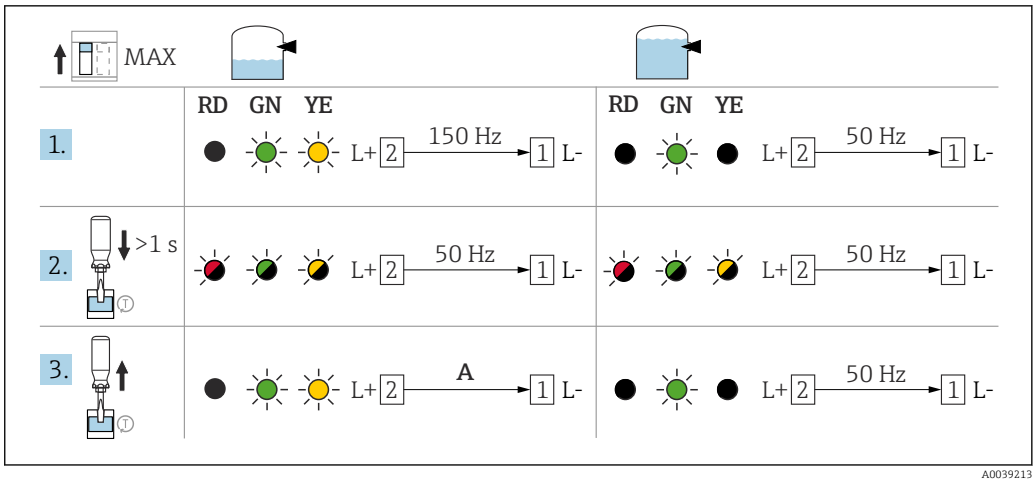

40 *FEL67 MAX switching behavior and signaling*

A *After the test button is pressed, the output frequency is switched off (50 Hz) for at least 10 s even if the button is pressed for < 10 s. If the test button is pressed for > 10 s, the output frequency remains at 50 Hz until the test button is released. The output frequency is then 150 Hz again afterwards.*

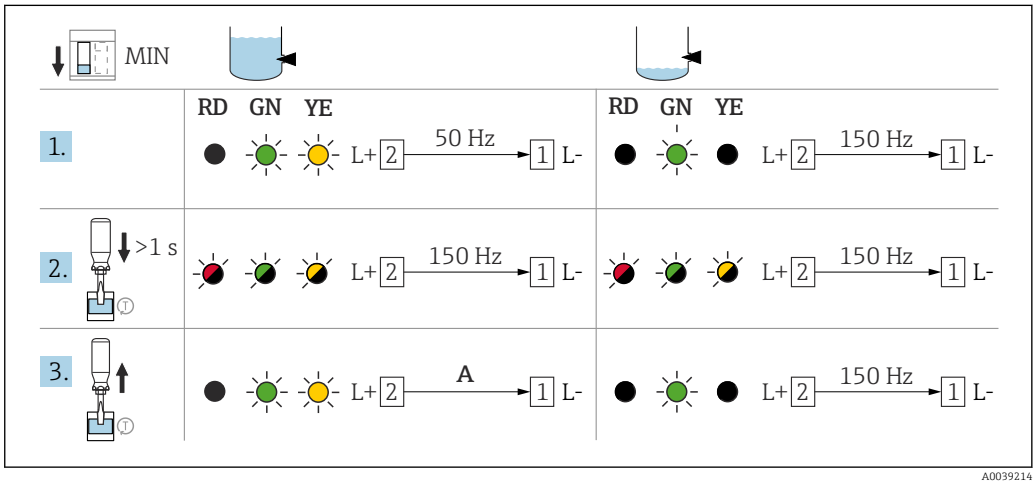

41 *FEL67 MIN switching behavior and signaling*

A *After the test button is pressed, the output frequency is switched off (150 Hz) for at least 10 s even if the button is pressed for < 10 s. If the test button is pressed for > 10 s, the output frequency remains at 150 Hz until the test button is released. The output frequency is then 50 Hz again afterwards.*

The PFM frequency cannot be measured on site. It is therefore recommended to proof test the functionality at the Nivotester FTL325P/FTL375P.

8.2.5 FEL68 switching behavior and signaling

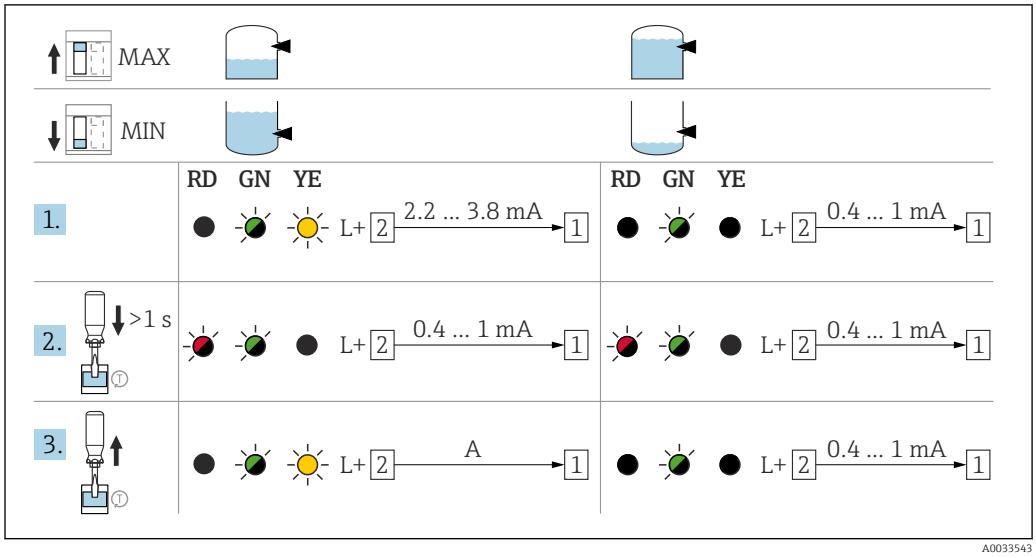

42 *NAMUR electronics switching behavior and signaling*

A *After the test button is pressed, the current is 0.4 to 1 mA for at least 10 s even if the button is pressed for < 10 s. If the test button is pressed for > 10 s, the current remains at 0.4 to 1 mA until the test button is released. The current is then 2.2 to 3.8 mA again afterwards.*

8.3 Functional test of the electronic switch using the test magnet

The functional test of the electronic switch can be performed without opening the device:

- Hold the test magnet against the marking on the nameplate on the outside.
  - Simulation is possible in the case of the FEL62, FEL64, FEL64DC, FEL68 electronic inserts.

The functional test with the test magnet acts in the same way as the functional test using the test button on the electronic insert.

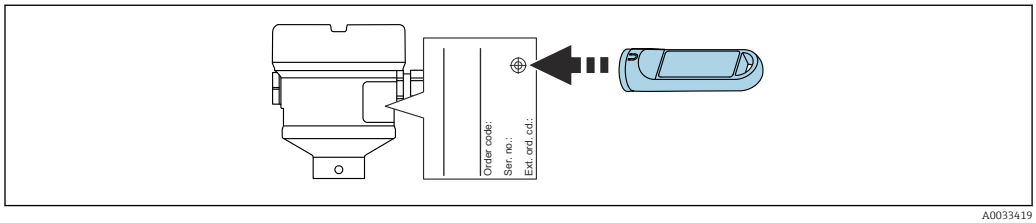

43 *Functional test with test magnet*

8.4 Switching on the device

During the power-up time, the device output is in the safety-oriented state, or in the alarm state if available:

- For electronic insert FEL61, the output will be in the correct state after a maximum of 4 sfollowing power-up.
- For electronic inserts FEL62, FEL64, FEL64DC, the output will be in the correct state after a maximum of 3 s following power-up.
- For electronic inserts FEL68 NAMUR and FEL67 PFM, a functional test is always performed upon power-up. The output will be in the correct state after a maximum of 10 s.

8.5 Establishing a connection via SmartBlue app

8.5.1 Requirements

Device requirements
Commissioning via the SmartBlue app is only possible if a Bluetooth® module is installed in the device.

System requirements
Please see the "App Store (Apple)" or "Google Play Store" for information regarding the compatibility of the SmartBlue app with mobile devices.

8.5.2 Preliminaries

Make a note of the ID number of the Bluetooth® module. The ID number on the nameplate of the Bluetooth® module is used as the initial password when the connection is established for the first time.

The tall cover with sight glass must be used for devices that are operated with the Bluetooth® module.

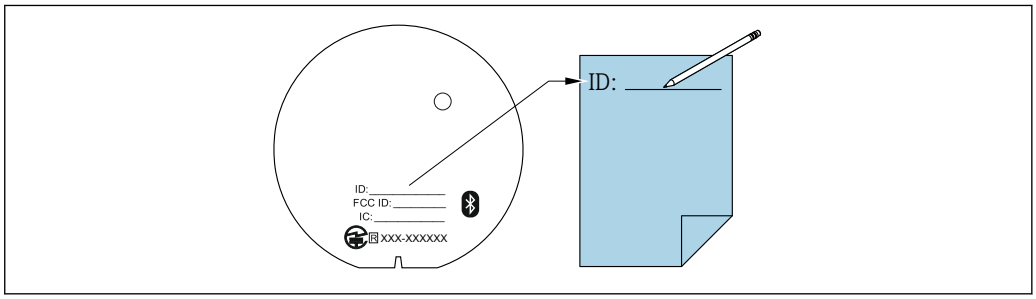

A0039040

8.5.3 Establishing a connection via SmartBlue app

1. Scan the QR code or enter "SmartBlue" in the search field.
   ↳

   A0039186

   44 *Download link*
2. Start SmartBlue.
3. Select device from live list displayed.
4. Log-in:
   ↳ User name: admin
   Password: ID number on the Bluetooth® module
5. Tap the icons for more information.

Change the password after logging in for the first time!

It is important to note the following if the Bluetooth® module is removed from one device and installed in another device: All log-in details are only stored in the Bluetooth® module and not in the device. This also applies to the password changed by the user.

Saving PDF reports

The PDF reports generated in the SmartBlue app are not saved automatically and must therefore be actively saved on the smartphone or tablet.

9 Operation

9.1 Diagnostics menu

The following data can be read out via the optional Bluetooth® module and the associated Endress+Hauser SmartBlue app.

9.1.1 "Diagnostics" menu

Settings and information concerning diagnostics as well as help for troubleshooting

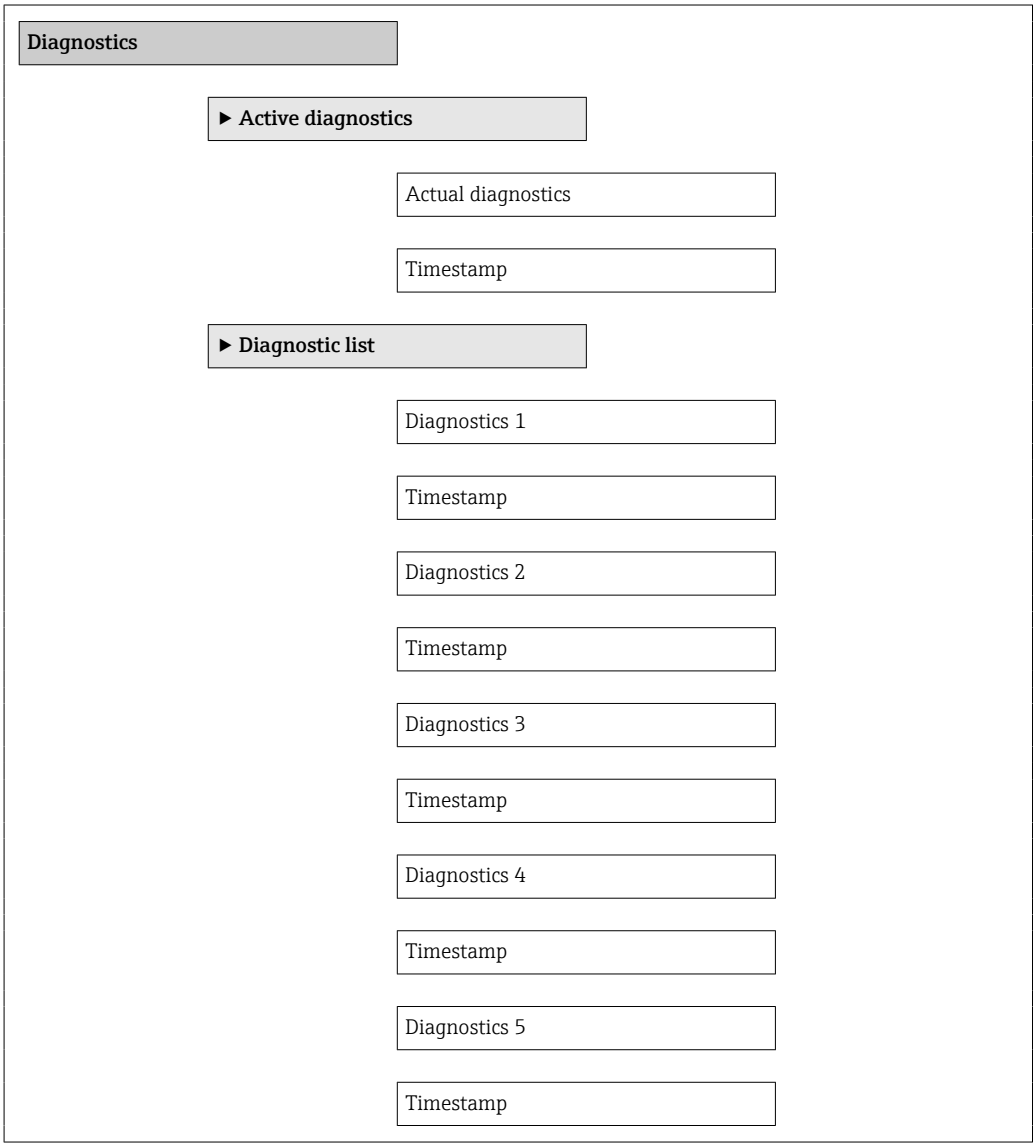

9.1.2 "Application" menu

Functions for detailed process adaptation to integrate the device optimally into your application

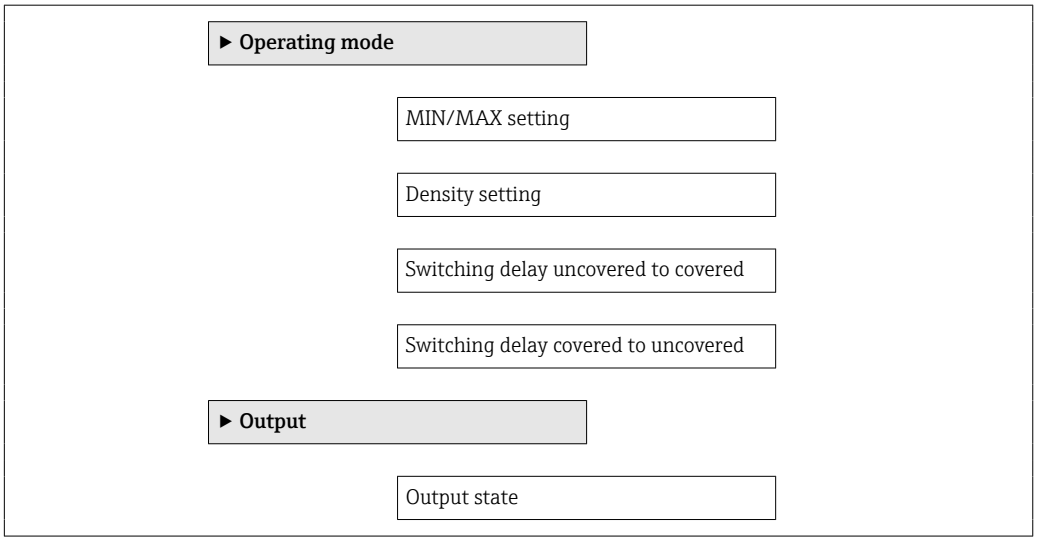

9.1.3 "System" menu

System settings concerning device management, user administration or safety

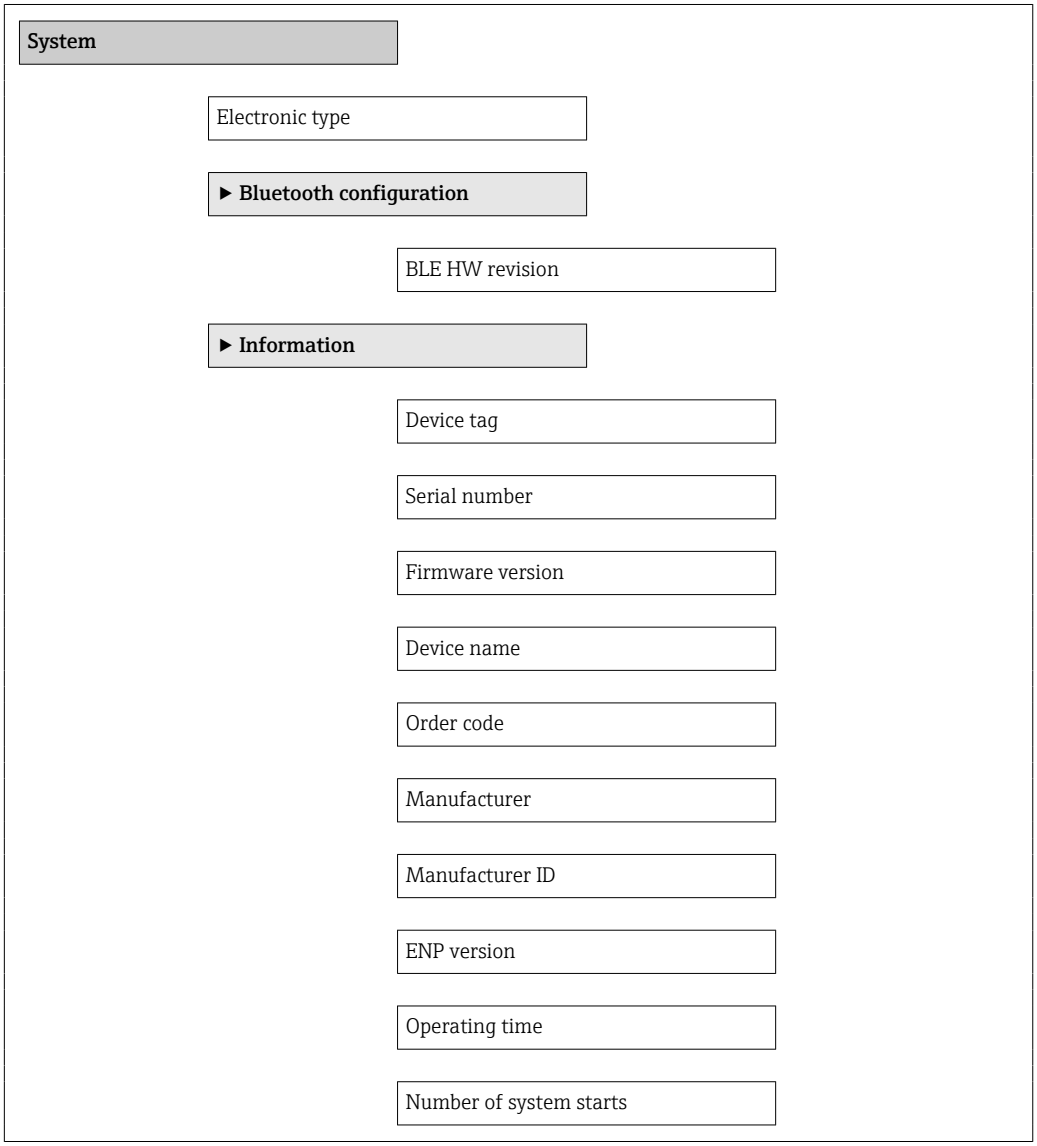

Time stamp of last proof test

Date of proof test

Frequency at delivery status

Current frequency

Upper alarm frequency

Upper warning frequency

Lower alarm frequency

Battery status

Electronics temperature

Minimum electronics temperature

Maximum electronics temperature

9.2 Heartbeat Verification

The "Heartbeat Verification" module contains **Heartbeat Verification** wizard, which verifies the current instrument health and creates the Heartbeat Technology verification report:

- The wizard can be used via the SmartBlue app.
- The wizard guides the user through the entire process for creating the verification report.
- The operating hours counter and minimum/maximum temperature indicator (peakhold) are displayed.
- If the oscillation frequency of the fork increases, a corrosion warning appears.
- The as-delivered state of the oscillation frequency in air is indicated on the verification report. A high oscillation frequency is an indicator of corrosion. A lower oscillation frequency indicates buildup or a sensor covered by the medium. Deviations of the oscillation frequency from the oscillation frequency in the as-delivered state can be caused by the process temperature and process pressure.

9.3 Proof testing for SIL/WHG devices

The proof test is only available for devices with SIL or WHG approval.

The "SIL Proof test" module, the "WHG Proof test" module or the "SIL/WHG Proof test" module contains an **SIL/WHG Prooftest** wizard, which must be performed at appropriate intervals in the following applications: SIL (IEC 61508/IEC 61511), WHG (German Water Resources Act (Gesetz zur Ordnung des Wasserhaushalts)):

- The wizard can be used via the SmartBlue app.
- The wizard guides the user through the entire process for creating the verification report.
- The verification report can be saved as a PDF file.

10 Diagnostics and troubleshooting

The device indicates warnings and errors via Bluetooth® wireless technology in the SmartBlue app and via the LEDs on the electronic insert. All the device warnings and errors are for information purposes only and do not have a safety function. The errors diagnosed by the device are displayed in the SmartBlue app in accordance with NE 107. Depending on the diagnostic message, the device behaves in accordance with a warning or error.

The device behaves in accordance with NAMUR Recommendation NE 131 "NAMUR standard device requirements for field devices for standard applications".

If using NAMUR electronics, insert or replace the battery in the Bluetooth® module.

10.1 Diagnostic information via LED

10.1.1 LED at electronic insert

LED green not lit
Possible cause: No power supply
Troubleshooting: Check plug, cable and power supply

LED flashes red
Possible cause: Overload or short-circuit in load circuit
Troubleshooting: Clear the short-circuit
Reduce maximum load current to below 350 mA

LED red continuously lit
Possible cause: Internal sensor error or electronic fault
Troubleshooting: Replace device

No LED is lit (only applies for FEL61)
Possible cause: load current > 3.8 mA in the blocked state
Troubleshooting: replace electronics

10.1.2 SmartBlue

Device is not visible in the live list
Possible cause: Bluetooth® connection not available
The device is already connected to another smartphone or tablet
Cable for Bluetooth® module not connected
Troubleshooting:
- Connect the Bluetooth® module to the COM interface
- Enable Bluetooth® function on smartphone or tablet
- If using NAMUR electronics, insert or replace the battery in the Bluetooth® module.

Device is visible in the live list but cannot be accessed via SmartBlue
- Possible cause on Android terminal
  Troubleshooting:
  - Check whether the location function is enabled for the app
  - Check whether the location function for the app was approved the first time
  - GPS or positioning function must be activated for certain Android versions in conjunction with Bluetooth® wireless technology
  - Activate GPS, close the app fully and restart, enable the positioning function for the app
- Possible cause on Apple terminal
  Troubleshooting:
  - Log in as normal
  - Enter the user name: admin
  - Enter initial password (serial number of Bluetooth® module), paying attention to lower/upper case

Log-in via SmartBlue not possible
Possible cause: Device is being put into operation for the first time
Troubleshooting: Enter initial password (ID number of Bluetooth® module) and change it, paying attention to lower/upper case.

No communication with device via SmartBlue
- Possible cause: Incorrect password entered
  Troubleshooting: Enter correct password
- Possible cause: Forgotten password
  Troubleshooting: Contact Endress+Hauser Service

11 Maintenance

11.1 Maintenance tasks

No specific maintenance work is required.

11.1.1 Cleaning

Cleaning of surfaces not in contact with the medium

- Recommendation: Use a lint-free cloth that is either dry or slightly dampened using water.
- Do not use any sharp objects or aggressive cleaning agents that corrode the surfaces (e.g. displays, housing) and seals.
- Do not use high-pressure steam.
- Observe the degree of protection of the device.

The cleaning agent used must be compatible with the materials of the device configuration. Do not use cleaning agents with concentrated mineral acids, bases or organic solvents.

Cleaning of surfaces in contact with the medium

Note the following for cleaning and sterilization in place (CIP/SIP):
- Use only cleaning agents to which the materials in contact with the medium are sufficiently resistant.
- Observe the permitted maximum medium temperature.

Cleaning the vibrating fork

It is not permitted to use the device with abrasive media. Material abrasion on the vibrating fork can result in the device malfunctioning.

- Clean the vibrating fork as necessary
- Cleaning is also possible in the installed state, e.g. CIP Cleaning in Place and SIP Sterilization in Place

12 Repair

12.1 General notes

12.1.1 Repair concept

Endress+Hauser repair concept
- The devices have a modular design
- Customers can carry out repairs

For more information on service and spare parts, please contact your Endress+Hauser sales representative.

12.1.2 Repairs to Ex-approved devices

WARNING

Incorrect repair can compromise electrical safety!
Explosion hazard!
- ▶ Only specialist personnel or the manufacturer's service team may carry out repairs on Ex-certified devices in accordance with national regulations.
- ▶ Relevant standards and national regulations on hazardous areas, safety instructions and certificates must be observed.
- ▶ Only use original spare parts from the manufacturer.
- ▶ Please note the device designation on the nameplate. Only identical parts may be used as replacements.
- ▶ Carry out repairs according to the instructions.
- ▶ Only the manufacturer's service team is permitted to modify a certified device and convert it to another certified version.

12.2 Spare parts

Product spare parts that are currently available can be found online at:
www.endress.com/onlinetools

12.3 Return

The requirements for safe device return can vary depending on the device type and national legislation.

1. Refer to the web page for information: https://www.endress.com
2. If returning the device, pack the device in such a way that it is reliably protected against impact and external influences. The original packaging offers the best protection.

12.4 Disposal

If required by the Directive 2012/19/EU on waste electrical and electronic equipment (WEEE), the product is marked with the depicted symbol in order to minimize the disposal of WEEE as unsorted municipal waste. Do not dispose of products bearing this marking as unsorted municipal waste. Instead, return them to the manufacturer for disposal under the applicable conditions.

12.5 Battery disposal

- The end user is legally obliged to return used batteries
- The end user can return old batteries or electronic assemblies containing these batteries free of charge to Endress+Hauser

In accordance with German law regulating the use of batteries (BattG §28 Para 1 Number 3), this symbol is used to denote electronic assemblies that must not be disposed of as household waste.

13 Accessories

The accessories currently available for the product can be selected at www.endress.com:

1. Select the product using the filters and search field.
2. Open the product page.
3. Select **Spare parts & Accessories**.

13.1 LED module VU120 (optional)

A brightly lit LED indicates the operational status (switch status or alarm status). The LED module can be connected to the following electronic inserts: FEL62, FEL64, FEL64DC.

Order number: 71437382

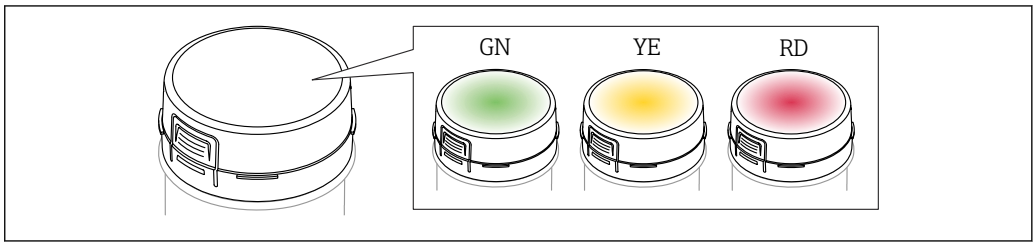

45 LED module, the LED lights up in green (GN), yellow (YE) or red (RD)

More detailed information and documentation are available:
- Product Configurator on the Endress+Hauser website www.endress.com
- Endress+Hauser sales organization www.addresses.endress.com

A tall cover, transparent or with sight glass, is required for using and retrofitting the LED module. The cover depends on the housing and approval of the device.

13.2 Bluetooth module VU121 (optional)

The Bluetooth module can be connected to the following electronic inserts via the COM interface: FEL61, FEL62, FEL64, FEL64DC, FEL67, FEL68 (2-wire NAMUR).

- Bluetooth module without battery for use in conjunction with electronic inserts FEL61, FEL62, FEL64, FEL64DC and FEL67
  Order number: 71437383
- Bluetooth module with battery for use in conjunction with electronic insert FEL68 (2-wire NAMUR)
  Order number: 71437381

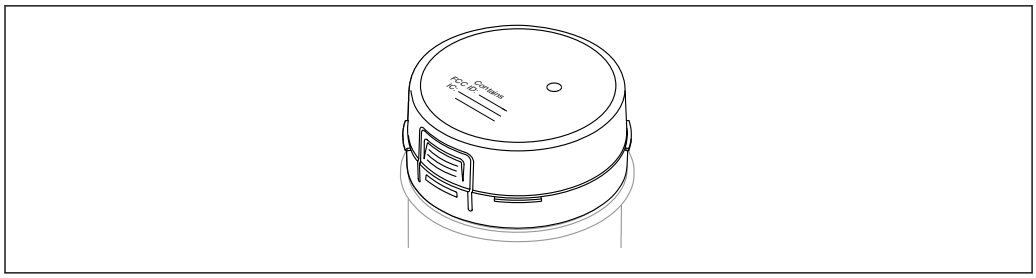

A0039257

46 *Bluetooth module VU121*

More detailed information and documentation are available:
- Product Configurator on the Endress+Hauser website www.endress.com
- Endress+Hauser sales organization www.addresses.endress.com

A tall cover, transparent or with sight glass, is required for using and retrofitting the Bluetooth module. The cover depends on the housing and approval of the device.

13.3 Protective cover: 316L, XW112

The weather protection cover can be ordered together with the device via the "Accessory enclosed" product structure.

It is used to protect against direct sunlight, precipitation and ice.

The 316L protective cover is suitable for dual-compartment housings made of aluminum. The delivery includes the holder for direct mounting on the housing

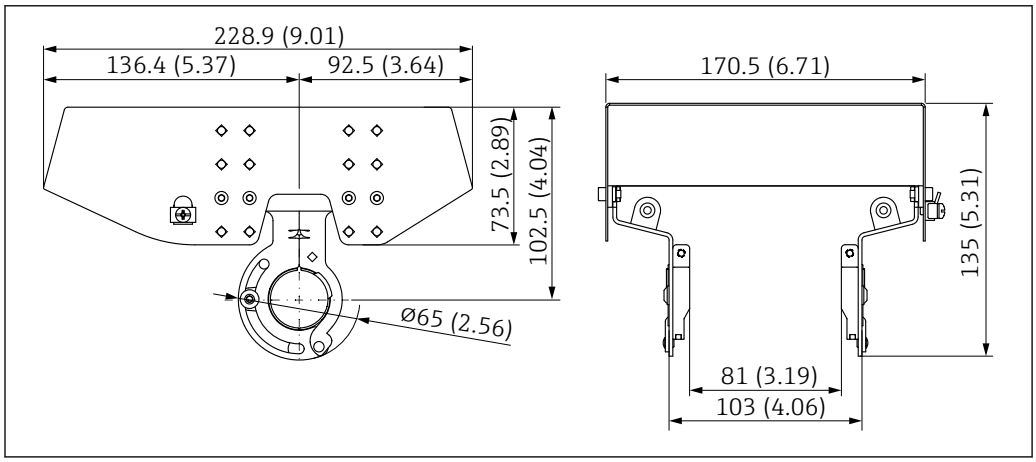

A0039231

47 *Dimensions of protective cover, 316 L, XW112. Unit of measurement mm (in)*

Material
- Protective cover: 316L
- Clamping screw: A4
- Holder: 316L

Accessory order code:
71438303

Special Documentation SD02424F

13.4 Weather protection cover, plastic, XW111

The weather protection cover can be ordered together with the device via the "Accessory enclosed" product structure.

It is used to protect against direct sunlight, precipitation and ice.

The plastic weather protection cover is suitable for the single compartment housing made of aluminum. The delivery includes the holder for direct mounting on the housing.

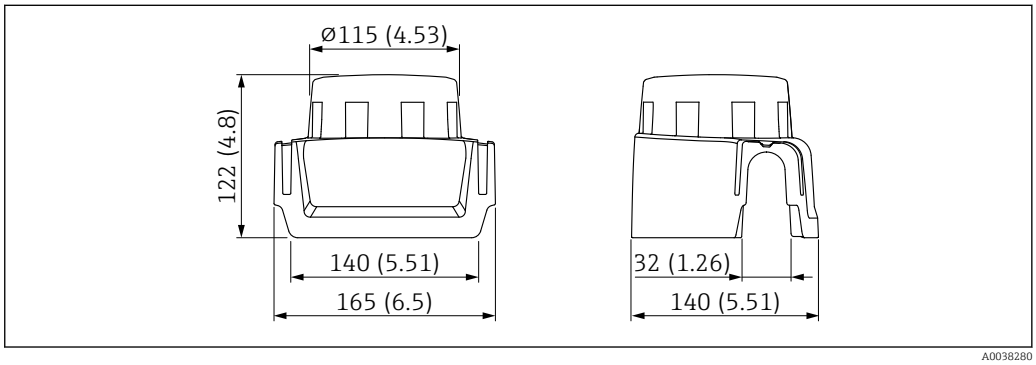

48 Dimensions of weather protection cover, plastic, XW111. Unit of measurement mm (in)

Material
Plastic

Accessory order code:
71438291

Special Documentation SD02423F

13.5 Weld-in adapter

Various weld-in adapters are available for installation in vessels or pipes. The adapters are optionally available with inspection certificate 3.1 EN10204.

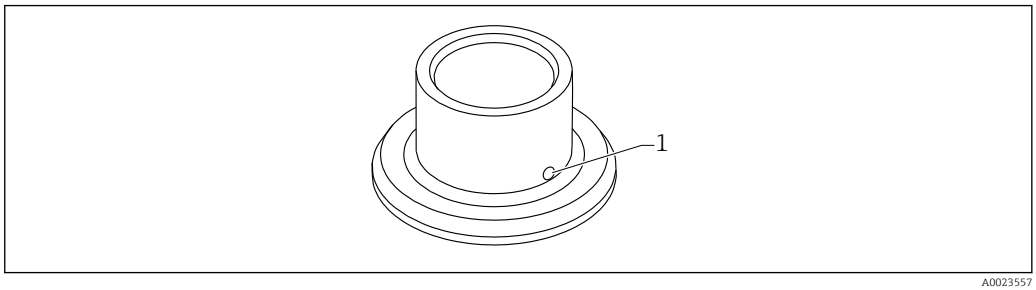

49 Weld-in adapter with leakage hole (sample view)

1 Leakage hole

Weld in the weld-in adapter in such a way that the leakage hole is pointing downwards. This enables any leaks to be detected quickly.

- G 1, Ø53 mounting on the pipe
- G 1, Ø60 flush mount on the vessel
- G ¾, Ø55 flush mount
- G 1 sensor adjustable
- RD52 sensor adjustable

For detailed information, see "Technical Information" TI00426F (Weld-in adapters, process adapters and flanges)

Available in the Download Area of the Endress+Hauser website (www.endress.com/downloads).

13.6 Test magnet

Order number: 71437508

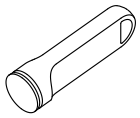

A0039209

50 Test magnet

13.7 M12 socket

The M12 sockets listed are suitable for use in the temperature range −25 to 70 °C (−13 to 158 °F).

M12 socket IP69
- Terminated at one end
- Angled
- 5 m (16 ft) PVC cable (orange)
- Slotted nut 316L (1.4435)
- Body: PVC
- Order number: 52024216

M12 socket IP67
- Angled
- 5 m (16 ft) PVC cable (gray)
- Slotted nut Cu Sn/Ni
- Body: PUR
- Order number: 52010285

14 Technical data

14.1 Input

14.1.1 Measured variable

The point level signal is triggered according to the operating mode (minimum or maximum detection) when the level exceeds or falls below the relevant point level.

14.1.2 Measuring range

Depends on the installation location and the pipe extension ordered
Maximum sensor length 3 m (10 ft)

14.2 Output

14.2.1 Output and input variants

Electronic inserts

2-wire AC (FEL61)
- Two-wire alternating current version
- Switches the load directly in the power supply circuit via an electronic switch

3-wire DC PNP (FEL62)
- Three-wire direct current version
- Switches the load via the transistor (PNP) and separate connection, e.g. in conjunction with programmable logical controllers (PLC)
- Ambient temperature −60 °C (−76 °F), optionally available to order
  Low-temperature electronic inserts are marked LT

Universal current connection, relay output (FEL64)
- Switches the loads via two potential-free change-over contacts
- Ambient temperature −60 °C (−76 °F), optionally available to order
  Low-temperature electronic inserts are marked LT

Direct current connection, relay output (FEL64DC)
- Switches the load via two potential-free change-over contacts
- Ambient temperature −60 °C (−76 °F), optionally available to order
  Low-temperature electronic inserts are marked LT

PFM output (FEL67)
- For separate switching unit (Nivotester FTL325P, FTL375P)
- PFM signal transmission; current pulses are superimposed on the power supply along the two-wire cabling
- Ambient temperature −50 °C (−58 °F), optionally available to order
  The low-temperature electronic inserts are marked LT

2-wire NAMUR > 2.2 mA/< 1.0 mA (FEL68)
- For separate switching unit, e.g. Nivotester FTL325N
- Signal transmission H-L edge 2.2 to 3.8/0.4 to 1.0 mA as per IEC 60917-5-6 (NAMUR) on two-wire cable
- Ambient temperature −50 °C (−58 °F), optionally available to order
  Low-temperature electronic inserts are marked LT

14.2.2 Output signal

Switching output

Preset switching delay times can be ordered:
- 0.5 s when the vibrating fork is covered and 1.0 s when it is uncovered (factory setting)
- 0.25 s when the vibrating fork is covered and 0.25 s when it is uncovered
- 1.5 s when the vibrating fork is covered and 1.5 s when it is uncovered
- 5.0 s when the vibrating fork is covered and 5.0 s when it is uncovered

COM interface

For connecting to modules VU120 or VU121 (no modifying effect)

Bluetooth® wireless technology (optional)

The device has a Bluetooth® interface. Device data and diagnostic data can be read out using the free SmartBlue app.

14.2.3 Ex connection data

See safety instructions (XA): All data relating to explosion protection are provided in separate Ex documentation and are available from the Downloads area of the Endress+Hauser website. The Ex documentation is supplied as standard with all devices approved for use in explosion hazardous areas.

14.3 Environment

14.3.1 Ambient temperature range

⚠ WARNING

Permitted connection voltage exceeded!

▶ For electrical safety reasons, the maximum connection voltage for all electronic inserts at ambient temperatures below −40 °C (−40 °F) is limited to a maximum of 35 V DC.

−40 to +70 °C (−40 to +158 °F)

Optionally available to order:
- −50 °C (−58 °F) with restricted operating life and performance
- −60 °C (−76 °F) with restricted operating life and performance

ℹ Below −50 °C (−58 °F): Devices can be permanently damaged

The minimum permitted ambient temperature of the plastic housing is limited to −20 °C (−4 °F); 'indoor use' applies to North America.

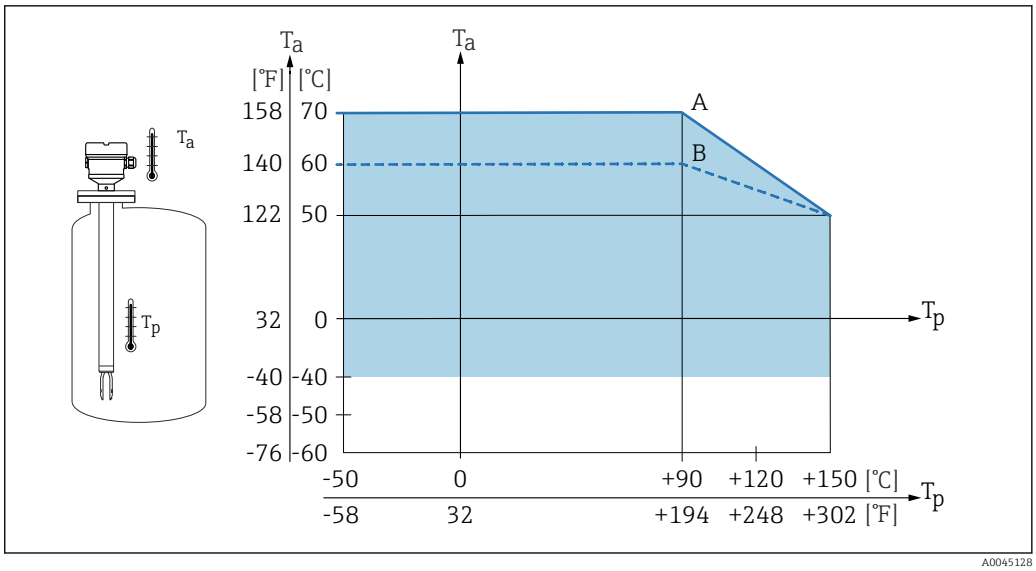

51 Permitted ambient temperature T_a at the housing as a function of the process temperature T_p in the vessel:

A Device without LED module
B Device with LED module

For devices with a temperature spacer, the following ambient temperatures apply across the entire process temperature range:
A: 70 °C (158 °F)
B: 60 °C (140 °F)

Maximum current carrying capacity with FEL64

- Without LED module:
  - For FEL64 with hygienic housing
    T_p < 90 °C: Max. load current 4 A; Tp > 90 °C; max. load current 2 A
  - For FEL64 and all other housings
    T_p < 90 °C: Max. load current 6 A; Tp > 90 °C; max. load current 4 A
- With LED module:
  - For FEL64 with hygienic housing
    T_p < 90 °C: Max. load current 4 A; Tp > 90 °C; max. load current 2 A
  - For FEL64 and all other housings
    T_p < 90 °C: Max. load current 6 A; Tp > 90 °C; max. load current 2 A

- Low temperatures are not possible for SIL
- Bluetooth® module:
  - −50 °C (−58 °F) for non-Ex, Ex ia and Ex d
  - −60 °C (−76 °F) for non-Ex
- LED module:
  - −50 °C (−58 °F) for non-Ex, Ex ia and Ex d
  - −60 °C (−76 °F) for non-Ex

Outdoor operation in strong sunlight:
- Mount the device in a shaded location
- Avoid direct sunlight, particularly in warmer climatic regions
- Use a protective cover, which can be ordered as an accessory

Hazardous area

In the hazardous area, the permitted ambient temperature can be limited depending on the zones and gas groups. Pay attention to the information in the Ex documentation (XA).

14.3.2 Storage temperature

−40 to +80 °C (−40 to +176 °F)
Optional: −50 °C (−58 °F), −60 °C (−76 °F)

14.3.3 Humidity

Operation up to 100 %. Do not open in a condensing atmosphere.

14.3.4 Operating altitude

As per IEC 61010-1 Ed.3:
- Up to 2 000 m (6 600 ft) above sea level
- Can be extended to 3 000 m (9 800 ft) above sea level if overvoltage protection is used

14.3.5 Climate class

As per IEC 60068-2-38 test Z/AD

14.3.6 Degree of protection

Testing according to IEC 60529 and NEMA 250

IP68 test condition: 1.83 m H_2O for 24 h

Housing
See cable entries

Cable entries
- M20 coupling, plastic, IP66/68 NEMA Type 4X/6P
- M20 coupling, nickel-plated brass, IP66/68 NEMA Type 4X/6P
- M20 coupling, 316L, IP66/68 NEMA Type 4X/6P
- M20 coupling, 316L, hygienic, IP66/68/69 NEMA Type 4X/6P
- M20 thread, IP66/68 NEMA Type 4X/6P
- G ½ thread, NPT ½, NPT ¾ IP66/68 NEMA Type 4X/6P

Degree of protection for M12 plug
- When housing is closed and connection cable is plugged in: IP66/67 NEMA Type 4X
- When housing is open or connection cable is not plugged in: IP20, NEMA Type 1

NOTICE

M12 plug: Loss of IP protection class due to incorrect installation!
- ▶ The degree of protection only applies if the connecting cable used is plugged in and screwed tight.
- ▶ The degree of protection only applies if the connecting cable used is specified according to IP67 NEMA Type 4X.

If the "M12 plug" option is selected as the electrical connection, **IP66/67 NEMA Type 4X** applies for all housing types.

14.3.7 Vibration resistance

As per IEC 60068-2-64-2008
a(RMS) = 50 m/s², f = 5 to 2 000 Hz , t = 3 axes x 2 h

14.3.8 Shock resistance

As per IEC 60068-2-27-2008: 300 m/s² [= 30 g_n] + 18 ms

g_n: standard acceleration of gravity

14.3.9 Mechanical load

Support the device in the event of severe dynamic load. Maximum lateral loading capacity of the pipe extensions and sensors: 75 Nm (55 lbf ft).

For more details, see the "Supporting the device" section.

14.3.10 Pollution degree

Pollution degree 2

14.3.11 Electromagnetic compatibility (EMC)

- Electromagnetic compatibility according to EN 61326 series. Interference immunity according to Table 2 (Industrial), interference radiation according to Group 1 Class B
- Electromagnetic compatibility as per NAMUR recommendation EMC NE21
- Fulfills the requirements of functional safety (SIL) in accordance with EN 61326-3-1 (with FEL60H electronic insert)

For more details, refer to the EU Declaration of Conformity.

14.4 Process

14.4.1 Process temperature range

−50 to +150 °C (−58 to +302 °F)

Pay attention to the pressure and temperature dependency.

14.4.2 Thermal shock

≤ 120 K/s

14.4.3 Process pressure range

−1 to +64 bar (−14.5 to 928 psi) for a maximum of 150 °C (302 °F)

The maximum pressure for the device depends on the lowest-rated element with regard to pressure.

Components are: process connection, optional mounting parts, or accessories.

WARNING

Incorrect design or use of the device may lead to bursting parts!
This may result in severe, possibly irreversible injury to persons and environmental hazards.

- Only operate the device within the specified limits for the components!
- MWP (maximum working pressure): The maximum working pressure is specified on the nameplate. This value refers to a reference temperature of 20 °C (68 °F) and may be present at the device for an unlimited time. Note temperature dependency of MWP. For higher temperatures, refer to the following standards for the permitted pressure values for flanges:EN 1092-1 (materials 1.4435 and 1.4404 are identical with regard to their stability/temperature property and are grouped together in under 13E0 in EN 1092-1 Tab. 18. The chemical composition of the two materials can be identical), ASME B 16.5a, JIS B 2220 (the latest version of the standard applies in each case).
- The Pressure Equipment Directive (2014/68/EU) uses the abbreviation "PS". The abbreviation "PS" corresponds to the maximum working pressure (MWP) of the device
- MWP data that deviate from this is provided in the relevant sections of the Technical Information.

Process pressure range of the sensors

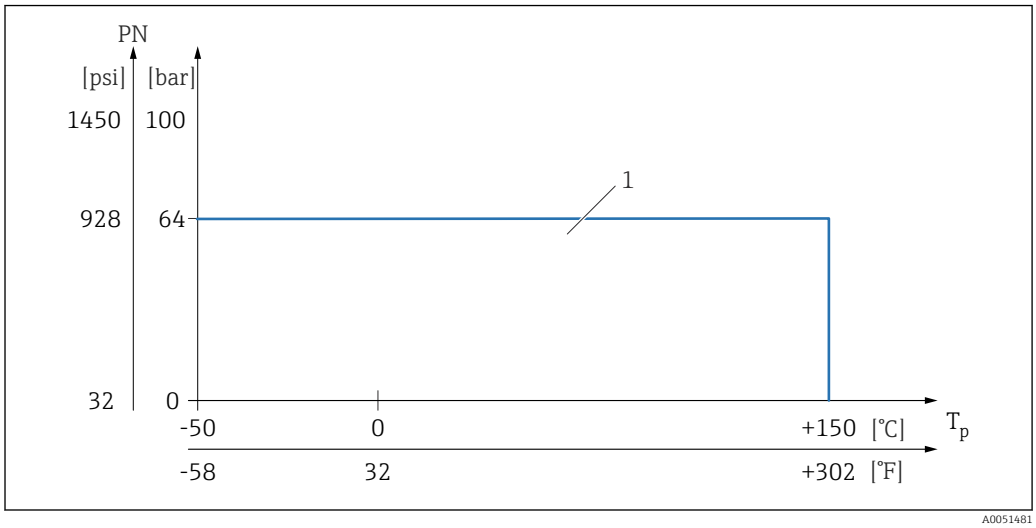

1 PN: 64 bar (928 psi) for a maximum of 150 °C (302 °F), refer to "Process connections" section for exceptions

14.4.4 Overpressure limit

- PN = 64 bar (928 psi): overpressure limit = 1.5 · PN maximum 100 bar (1 450 psi) depending on the selected process connection
- Membrane burst pressure at 200 bar (2 900 psi)

The device function is limited during the pressure test.

Mechanical integrity is guaranteed up to 1.5 times the process nominal pressure PN.

14.4.5 Medium density

Liquids with density > 0.7 g/cm³ (43.7 lb/ft³)
Switch position > 0.7 g/cm³ (43.7 lb/ft³), as-delivered state

Liquids with density > 0.5 g/cm³ (31.2 lb/ft³)
Switch position > 0.5 g/cm³ (31.2 lb/ft³), can be configured via DIP switch

Liquids with density > 0.4 g/cm³ (25.0 lb/ft³)
- Optionally available to order
- SIL for defined media and process parameters on request
- Fixed value that cannot be changed
  The function of the DIP switch is interrupted

14.4.6 Viscosity

≤ 10 000 mPa·s

14.4.7 Pressure tightness

Up to vacuum

In vacuum evaporation plants, select the 0.4 g/cm³ (25.0 lb/ft³)/ density setting.

14.4.8 Solids contents

Ø ≤ 5 mm (0.2 in)

14.5 Additional technical data

Current Technical Information: Endress+Hauser website: www.endress.com → Downloads.

71783285

www.addresses.endress.com

Endress+Hauser

People for Process Automation