BA02215F/00/EN/06.26-00
71783283
2026-09-11

Valid as of version
01.00.zz (Device firmware)

Operating Instructions
Liquiphant FTL64

Vibronic
HART
Level switch for liquids in high-temperature applications

Endress+Hauser
People for Process Automation

Table of contents

1 6

2 About this document 7
2.1 Document function 7
2.2 Symbols 7
2.2.1 Safety symbols 7
2.2.2 Electrical symbols 7
2.2.3 Tool symbols 7
2.2.4 Communication-specific symbols 7
2.2.5 Symbols for certain types of Information 7
2.2.6 Symbols in graphics 8
2.3 Documentation 8
2.4 Change history 8
2.4.1 Version 01.00.zz 8
2.5 Registered trademarks 8

3 Basic safety instructions 9
3.1 Requirements for the personnel 9
3.2 Intended use 9
3.3 Workplace safety 9
3.4 Operational safety 9
3.5 Product safety 10
3.6 Functional Safety SIL (optional) 10
3.7 IT security 10
3.8 Device-specific IT security 10

4 Product description 11
4.1 Measuring principle 11
4.1.1 Point level measurement 11
4.2 Product design 12

5 Incoming acceptance and product identification 12
5.1 Incoming acceptance 12
5.2 Product identification 13
5.2.1 Nameplate 13
5.2.2 Manufacturer address 13
5.3 Storage and transport 13
5.3.1 Storage conditions 13
5.3.2 Transporting the device 13

6 Installation 14
6.1 Installation requirements 14
6.1.1 Pay attention to the temperature for devices with a PFA coating (conductive) 15
6.1.2 Taking the switch point into consideration 15
6.1.3 Take viscosity into consideration 15
6.1.4 Avoid buildup 16
6.1.5 Take clearance into consideration . . . 17
6.1.6 Support the device 17
6.2 Installing the device 18
6.2.1 Installation 18
6.3 Sliding sleeves 23
6.4 Post-mounting check 23

7 Electrical connection 23
7.1 Connecting requirements 23
7.1.1 Cover with securing screw 23
7.1.2 Potential equalization 24
7.2 Connecting the device 25
7.2.1 Supply voltage 25
7.2.2 Terminals 25
7.2.3 Cable specification 25
7.2.4 4 to 20 mA HART 26
7.2.5 Overvoltage protection 26
7.2.6 Wiring 27
7.2.7 Terminal assignment 27
7.2.8 Cable entries 28
7.2.9 Available device plugs 28
7.3 Ensuring the degree of protection 29
7.3.1 Degree of protection 29
7.4 Post-connection check 29

8 Operation options 29
8.1 Overview of operation options 29
8.2 FEL60H electronic insert 30
8.3 Functional test using operating key on electronic insert 31
8.4 Structure and function of the operating menu 32
8.4.1 User roles and related access authorization 32
8.5 Access to the operating menu via the local display 32
8.5.1 Device display (optional) 32
8.5.2 Operation via Bluetooth® wireless technology (optional) 33
8.6 Access to the operating menu via the operating tool 34
8.7 HistoROM data management 34

9 System integration 34
9.1 Overview of device description files 34
9.2 Measured variables via HART protocol 35
9.2.1 Device variables and measured values 35
9.2.2 System units 35

10 Commissioning 36
10.1 Preparations 36
10.1.1 As-delivered state 36
10.2 Post-installation and function check 36

10.3 Establishing a connection via FieldCare and DeviceCare . . . 37
10.3.1 Via HART protocol . . . 37
10.3.2 FieldCare/DeviceCare via service interface (CDI) . . . 37
10.4 Configuring the device address via software . . . 37
10.5 Configuring the operating language . . . 38
10.5.1 Local display . . . 38
10.5.2 Operating tool . . . 38
10.5.3 FieldCare . . . 38
10.5.4 DeviceCare . . . 38
10.6 Configuring the device . . . 39
10.6.1 Commissioning with DIP switch and operating keys on the electronic insert . . . 39
10.6.2 Resetting the password or device via operating keys . . . 39
10.6.3 Commissioning with "Commissioning" wizard . . . 39
10.6.4 Storing the oscillation frequencies . . . 40
10.7 Simulation . . . 40
10.8 Protecting settings from unauthorized access . . . 41
10.8.1 Locking or unlocking the hardware . . . 41
10.8.2 Locking or unlocking the display operation . . . 41
10.8.3 Parameter configuration - locking or enabling . . . 41

11 Operation . . . 42

11.1 Reading off the device locking status . . . 42
11.2 Reading off measured values . . . 42
11.3 Adapting the device to process conditions . . . 42
11.3.1 Level limit detection . . . 42
11.3.2 Sensor frequency . . . 43
11.4 Heartbeat Technology (optional) . . . 43
11.4.1 "Heartbeat Verification" wizard . . . 43
11.4.2 Data exchange performed by the user (asset management system) . . . 43
11.5 Proof testing for SIL/WHG devices (optional) . . . 44

12 Diagnostics and troubleshooting . . . 44

12.1 General troubleshooting . . . 44
12.1.1 General errors . . . 44
12.1.2 Fault - SmartBlue operation with Bluetooth® wireless technology . . . 45
12.1.3 Additional tests . . . 46
12.1.4 Behavior of current output in the event of a fault . . . 46
12.2 Diagnostic information on onsite display . . . 47
12.2.1 Diagnostic message . . . 47
12.3 Diagnostic event in the operating tool . . . 48
12.4 Adapting the diagnostic information . . . 48
12.5 Queued diagnostic messages . . . 49
12.6 Diagnostic list . . . 49
12.7 Event logbook . . . 51
12.7.1 Event history . . . 51
12.7.2 Filtering the event logbook . . . 51
12.7.3 Overview of information events . . . 52
12.8 Device reset . . . 52
12.8.1 Resetting the device via the operating software or display . . . 52
12.8.2 Resetting the device via operating keys on the electronic insert . . . 53
12.9 Device information . . . 53

13 Maintenance . . . 53

13.1 Maintenance tasks . . . 53
13.1.1 Cleaning . . . 53

14 Repair . . . 54

14.1 General notes . . . 54
14.1.1 Repair concept . . . 54
14.1.2 Repairs to Ex-approved devices . . . 54
14.2 Spare parts . . . 54
14.3 Replacement . . . 55
14.3.1 HistoROM . . . 55
14.4 Return . . . 55
14.5 Disposal . . . 55

15 Accessories . . . 55

15.1 Device Viewer . . . 55
15.2 Weather protection cover: 316L, XW112 . . . 56
15.3 Weather protection cover, plastic, XW111 . . . 56
15.4 M12 socket . . . 57
15.5 Sliding sleeves for unpressurized operation . . . 57
15.6 High pressure sliding sleeves . . . 58
15.7 Field Xpert SMT70 . . . 59
15.8 DeviceCare SFE100 . . . 59
15.9 FieldCare SFE500 . . . 60

16 Technical data . . . 60

16.1 Input . . . 60
16.1.1 Measured variable . . . 60
16.1.2 Measuring range . . . 60
16.2 Output . . . 60
16.2.1 Output signal . . . 60
16.2.2 Signal on alarm . . . 60
16.2.3 4 to 20 mA passive, HART . . . 61
16.2.4 Damping . . . 61
16.2.5 Switch output . . . 61
16.2.6 Ex connection data . . . 61
16.2.7 Protocol-specific data . . . 61
16.2.8 HART data . . . 62
16.2.9 Heartbeat Technology . . . 63
16.3 Environment . . . 63
16.3.1 Ambient temperature range . . . 63
16.3.2 Storage temperature . . . 64
16.3.3 Humidity . . . 64
16.3.4 Operating height . . . 64
16.3.5 Climate class . . . 64
16.3.6 Degree of protection . . . 64
16.3.7 Vibration resistance . . . 64
16.3.8 Shock resistance . . . 64

16.3.9 Mechanical load 65
16.3.10 Pollution degree 65
16.3.11 Electromagnetic compatibility (EMC) 65
16.4 Process 65
16.4.1 Process temperature range 65
16.4.2 Medium conditions 65
16.4.3 Thermal shock 65
16.4.4 Process pressure range 65
16.4.5 Overpressure limit 66
16.4.6 Medium density 67
16.4.7 Viscosity 67
16.4.8 Pressure tightness 67
16.4.9 Solids contents 67
16.5 Additional technical data 67

Index 68

1

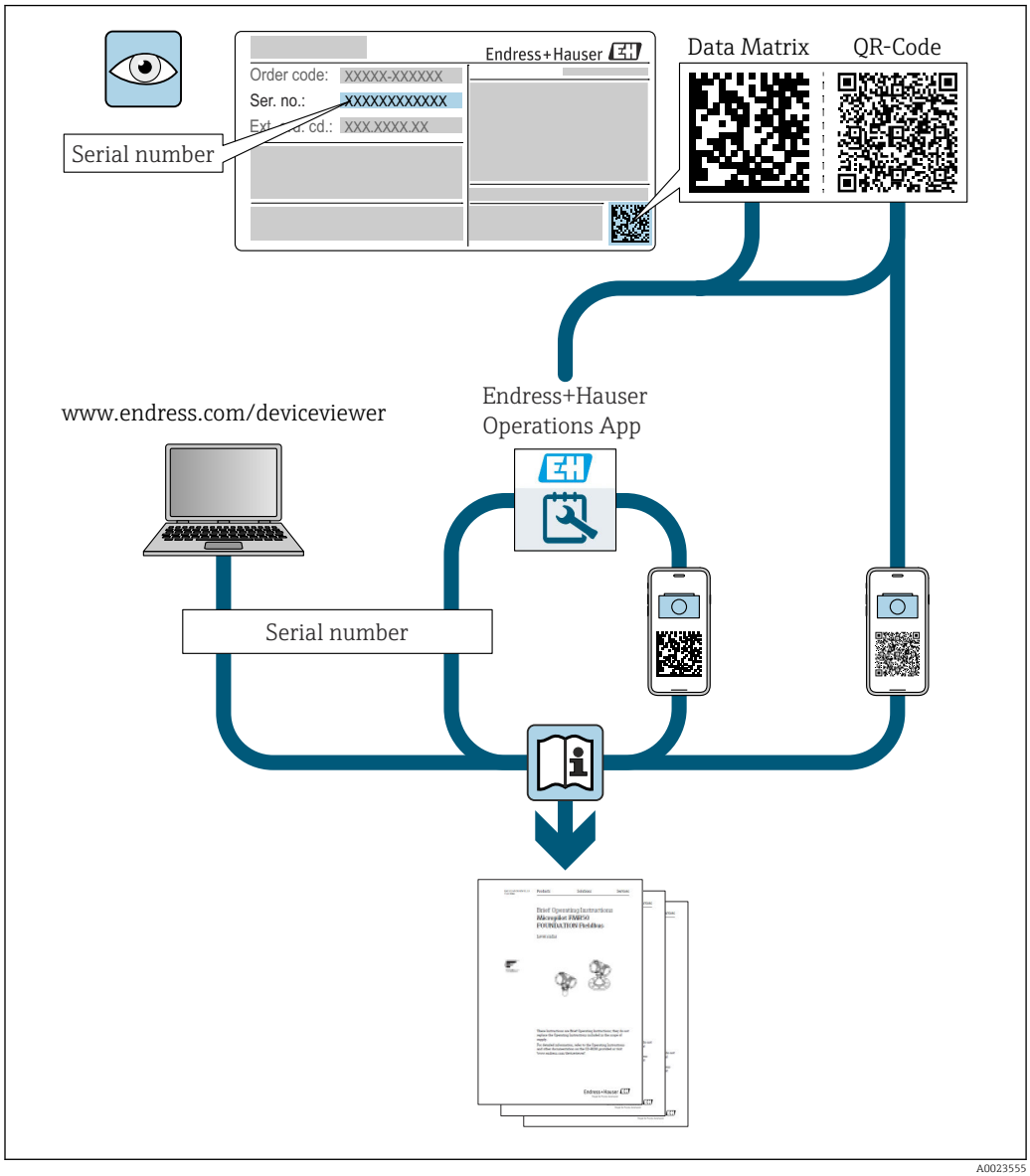

A0023555

- Make sure the document is stored in a safe place such that it is always available when working on or with the device
- Avoid danger to individuals or the facility: read the "Basic safety instructions" section carefully, as well as all other safety instructions in the document that are specific to working procedures

The manufacturer reserves the right to modify technical data without prior notice. The Endress+Hauser sales organization will supply you with current information and updates to these instructions.

2 About this document

2.1 Document function

These Operating Instructions contain all the information required in the various life cycle phases of the device: from product identification, incoming acceptance and storage, to installation, connection, operation and commissioning, through to troubleshooting, maintenance and disposal.

2.2 Symbols

2.2.1 Safety symbols

DANGER
This symbol alerts you to a dangerous situation. Failure to avoid this situation will result in serious or fatal injury.

WARNING
This symbol alerts you to a potentially dangerous situation. Failure to avoid this situation can result in serious or fatal injury.

CAUTION
This symbol alerts you to a potentially dangerous situation. Failure to avoid this situation can result in minor or medium injury.

NOTICE
This symbol alerts you to a potentially harmful situation. Failure to avoid this situation can result in damage to the product or something in its vicinity.

2.2.2 Electrical symbols

Ground connection
Grounded clamp, which is grounded via a grounding system.

Protective earth (PE)
Ground terminals, which must be grounded prior to establishing any other connections. The ground terminals are located on the inside and outside of the device.

2.2.3 Tool symbols

Flat-blade screwdriver

Allen key

Open-ended wrench

2.2.4 Communication-specific symbols

Bluetooth® wireless technology
Wireless data transmission between devices over a short distance via radio technology.

2.2.5 Symbols for certain types of Information

Permitted
Procedures, processes or actions that are permitted.

Forbidden
Procedures, processes or actions that are forbidden.

Tip
Indicates additional information

Reference to documentation

Reference to another section

1., 2., 3. Series of steps

2.2.6 Symbols in graphics

A, B, C ... View

1, 2, 3 ... Item numbers

Hazardous area

Safe area (non-hazardous area)

2.3 Documentation

For an overview of the scope of the associated Technical Documentation, refer to the following:
- *Device Viewer* (www.endress.com/deviceviewer): Enter the serial number from the nameplate
- *Endress+Hauser Operations app*: Enter serial number from nameplate or scan matrix code on nameplate.

2.4 Change history

The firmware version can explicitly be ordered via the product structure. This makes it possible to ensure the compatibility of the firmware version with an existing or planned system integration.

2.4.1 Version 01.00.zz

Original software

2.5 Registered trademarks

HART®
Registered trademark of the FieldComm Group, Austin, Texas, USA

Bluetooth®
The *Bluetooth®* word mark and logos are registered trademarks owned by the Bluetooth SIG, Inc. and any use of such marks by Endress+Hauser is under license. Other trademarks and trade names are those of their respective owners.

Apple®
Apple, the Apple logo, iPhone, and iPod touch are trademarks of Apple Inc., registered in the U.S. and other countries. App Store is a service mark of Apple Inc.

Android®
Android, Google Play and the Google Play logo are trademarks of Google Inc.

3 Basic safety instructions

3.1 Requirements for the personnel

The personnel for installation, commissioning, diagnostics and maintenance must fulfill the following requirements:
- Trained, qualified specialists must have a relevant qualification for this specific function and task.
- Are authorized by the plant owner/operator.
- Are familiar with federal/national regulations.
- Before starting work, read and understand the instructions in the manual and supplementary documentation as well as the certificates (depending on the application).
- Follow instructions and comply with basic conditions.

The operating personnel must fulfill the following requirements:
- Are instructed and authorized according to the requirements of the task by the facility's owner-operator.
- Follow the instructions in this manual.

3.2 Intended use

The device described in this manual is intended only for the level measurement of liquids.

Do not exceed or drop below the relevant limit values for the device
See the Technical Documentation

Incorrect use
The manufacturer is not liable for damage caused by improper or non-designated use.

Avoid mechanical damage:
- Do not touch or clean device surfaces with pointed or hard objects.

Clarification for borderline cases:
- For special media and fluids for cleaning, Endress+Hauser is glad to provide assistance in verifying the corrosion resistance of fluid-wetted materials, but does not accept any warranty or liability.

Residual risks
Due to the transfer of heat from the process and power dissipation within the electronics, the temperature of the housing may increase to up to 80 °C (176 °F) during operation. When in operation, the sensor can reach a temperature close to the medium temperature.

Danger of burns from contact with surfaces!
- In the event of elevated fluid temperatures, ensure protection against contact to prevent burns.

3.3 Workplace safety

For work on and with the device:
- Wear the required personal protective equipment according to federal/national regulations.

3.4 Operational safety

Damage to the device!
- Operate the device only if it is in proper technical condition, free from errors and faults.
- The operator is responsible for the trouble-free operation of the device.

Configuration, testing and maintenance work on the device

Process safety may be at risk during configuration, testing and maintenance work on the device.

- Alternative supervisory measures must be taken to guarantee the operational safety and process safety.

Modifications to the device

Unauthorized modifications to the device are not permitted and can lead to unforeseeable dangers.

- If modifications are nevertheless required, consult Endress+Hauser.

Repair

To ensure continued operational safety and reliability:

- Only perform repair work on the device if this is expressly permitted.
- Observe federal/national regulations pertaining to the repair of an electrical device.
- Use original spare parts and accessories from Endress+Hauser only.

Hazardous area

To eliminate danger to persons or the facility when the device is used in the hazardous area (e.g. explosion protection):

- Check the nameplate to verify if the device ordered can be put to its intended use in the hazardous area.
- Comply with the instructions in the separate supplementary documentation, which is an integral part of this manual.

3.5 Product safety

This state-of-the-art device is designed and tested in accordance with good engineering practice to meet operational safety standards. It left the factory in a condition in which it is safe to operate.

It meets general safety standards and legal requirements. It also complies with the EU directives listed in the device-specific EU declaration of conformity. The manufacturer confirms this by affixing the CE mark.

3.6 Functional Safety SIL (optional)

The Functional Safety Manual must be strictly observed for devices that are used in functional safety applications.

3.7 IT security

The manufacturer warranty is valid only if the product is installed and used as described in the Operating Instructions. The product features security mechanisms to protect it against any inadvertent changes to the settings. Security measures, which provide additional protection for the product and associated data transfer, must be implemented by the operators themselves in line with their security standards.

3.8 Device-specific IT security

The device offers specific functions to support protective measures by the operator. These functions can be configured by the user and guarantee greater in-operation safety if used correctly. An overview of the most important functions is provided in the following section.

- Write protection via hardware write protection switch
- Access code to change user role (applies to operation via display, Bluetooth® wireless technology or FieldCare, DeviceCare, asset management tools (e.g. AMS, PDM)

4 Product description

- Level switch for all liquids, for minimum or maximum detection in tanks, vessels and pipes
- Suitable for high-temperature applications up to 280 °C (536 °F)

4.1 Measuring principle

The sensor's vibrating fork vibrates at its natural frequency. As soon as the liquid covers the vibrating fork, the oscillation frequency decreases. The change in frequency causes the level switch to switch.

4.1.1 Point level measurement

Maximum or minimum detection for liquids in tanks or pipes in all industries. Suitable for leakage monitoring, pump dry-running protection or overfill prevention, for example.

Specific versions are suitable for use in hazardous areas.

The level switch differentiates between the "covered" and "not covered" conditions.

Depending on the MIN (minimum detection) or MAX (maximum detection) modes, there are two possibilities in each case: OK status and demand mode.

OK status
- In MIN mode, the vibrating fork is covered, e.g. pump dry-run protection
- In MAX mode, the vibrating fork is not covered, e.g. overfill protection

Demand mode
- In MIN mode, the vibrating fork is not covered, e.g. pump dry-run protection
- In MAX mode, the vibrating fork is covered, e.g. overfill protection system

4.2 Product design

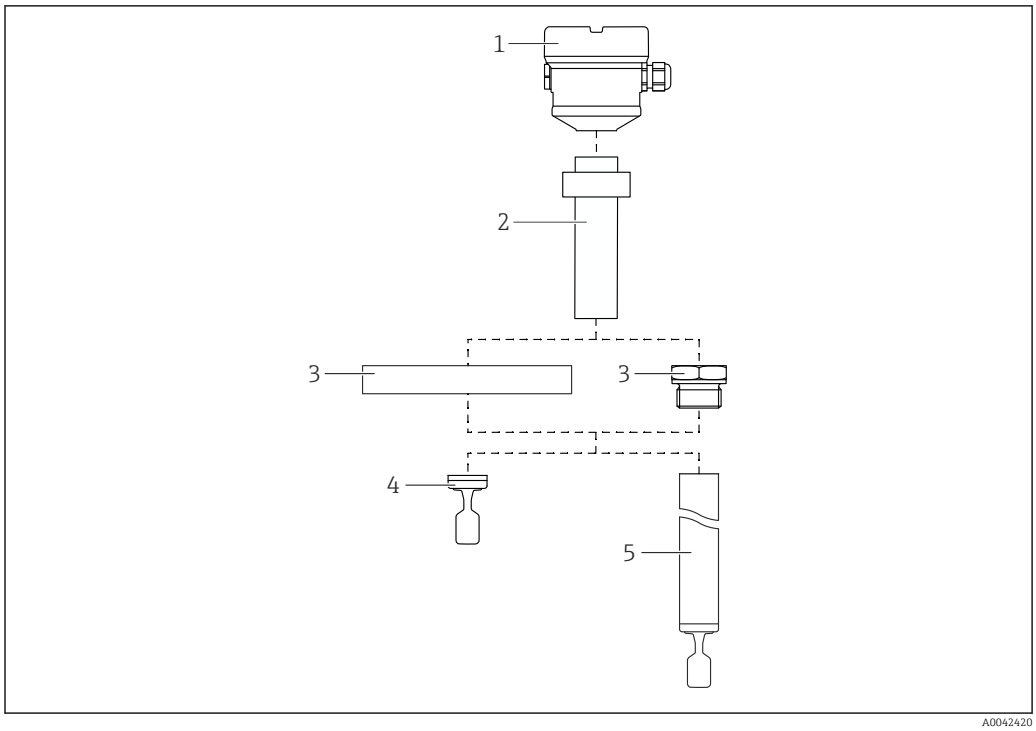

1 Product design

1 Housing with electronic insert and cover
2 Temperature spacer with gas-tight glass feedthrough → 2 lengths available, depending on the process temperature
3 Process connection (flange or thread)
4 Compact probe version with vibrating fork
5 Pipe extension probe with vibrating fork

5 Incoming acceptance and product identification

5.1 Incoming acceptance

On receipt of the delivery:

1. Check the packaging for damage.
   ↳ Report all damage immediately to the manufacturer.
   Do not install damaged components.
2. Check the scope of delivery using the delivery note.
3. Compare the data on the nameplate with the order specifications on the delivery note.
4. Check the technical documentation and all other necessary documents, e.g. certificates, to ensure they are complete.

If one of the conditions is not satisfied, contact the manufacturer.

5.2 Product identification

The following options are available for identification of the device:
- Nameplate specifications
- Order code with breakdown of the device features on the delivery note
- Enter the serial numbers from the nameplates in *Device Viewer* (www.endress.com/deviceviewer): all the information about the device is displayed.

5.2.1 Nameplate

Do you have the correct device?

The nameplate provides you with the following information on the device:
- Manufacturer identification, device designation
- Order code
- Extended order code
- Serial number
- Tag name (TAG) (optional)
- Technical values such as supply voltage, current consumption, ambient temperature, communication-specific data (optional)
- Degree of protection
- Approvals with symbols
- Reference to Safety Instructions (XA) (optional)

▶ Compare the information on the nameplate with the order.

5.2.2 Manufacturer address

Endress+Hauser SE+Co. KG
Hauptstraße 1
79689 Maulburg, Germany

Place of manufacture: See nameplate.

5.3 Storage and transport

5.3.1 Storage conditions

Use original packaging.

Storage temperature

−40 to +80 °C (−40 to +176 °F)
Optional: −50 °C (−58 °F), −60 °C (−76 °F)

5.3.2 Transporting the device

- Transport the device to the measuring point in the original packaging
- Hold the device by the housing, temperature spacer, flange or extension pipe
  Take suitable measures to protect the coating!
- Do not bend, shorten or extend the tuning fork

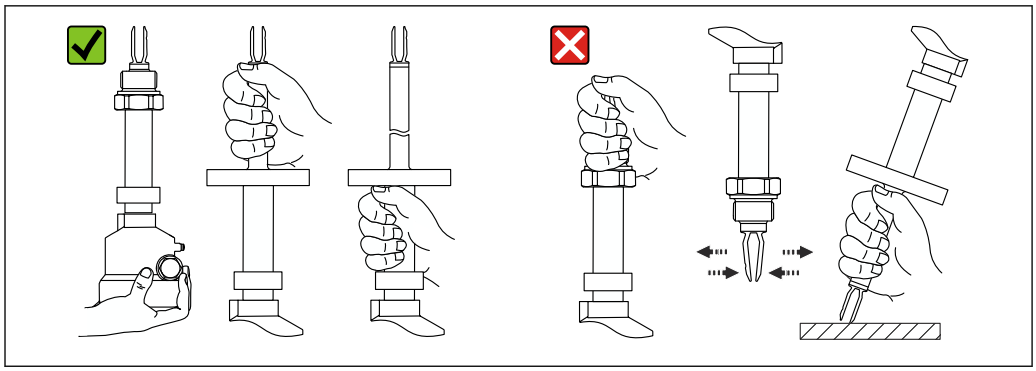

A0042422

2 *Handling the device during transportation*

6 Installation

Mounting instructions
- Any orientation for compact version or version with a pipe length up to approx. 500 mm (19.7 in)
- Vertical orientation from above for device with long pipe
- Minimum distance between the vibrating fork and the tank wall or pipe wall: 10 mm (0.39 in)

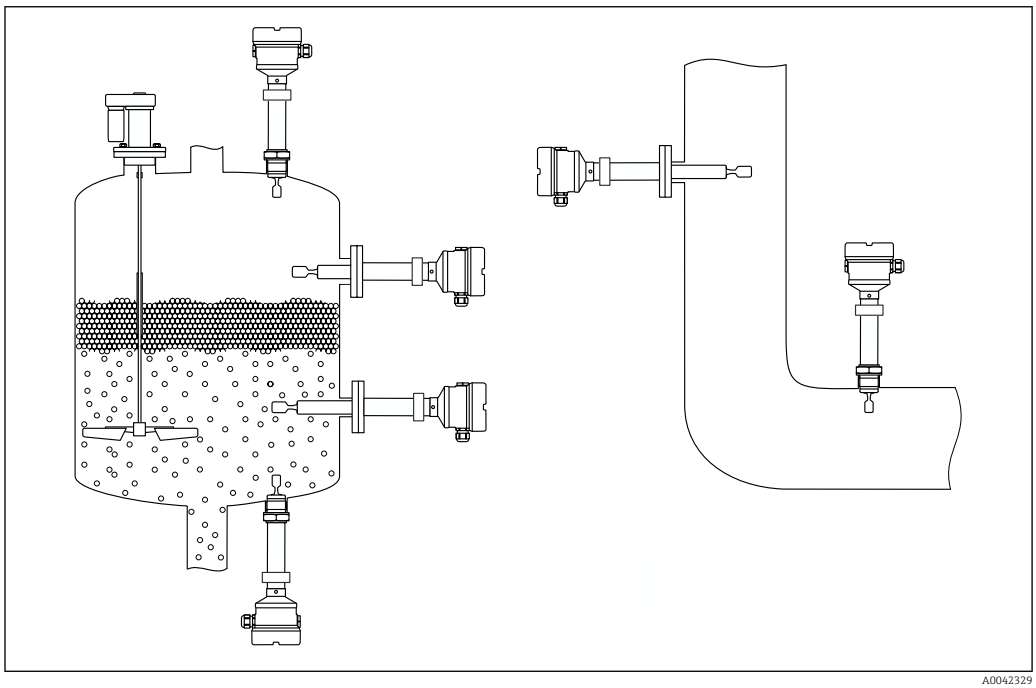

A0042329

3 *Installation examples for a vessel, tank or pipe*

6.1 Installation requirements

NOTICE

Scratches or impacts damage the coated surface of the device.

▶ Ensure the device is handled properly and professionally during all mounting work.

6.1.1 Pay attention to the temperature for devices with a PFA coating (conductive)

The difference in temperature between the outer and inner side of the flange may not exceed 60 °C (140 °F).

If necessary, use external insulation.

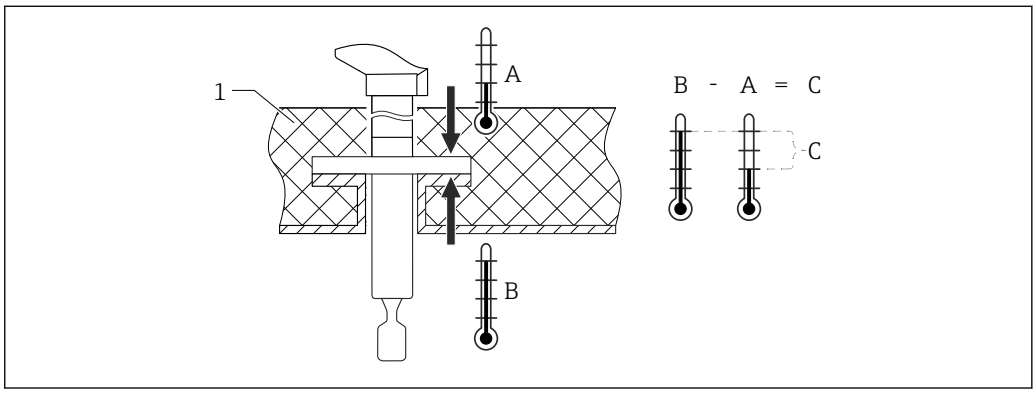

4 *Difference in temperature between outer and inner side of flange*

1 Insulation
A Temperature of flange, outer side
B Temperature of flange, inner side, for PFA (conductive) maximum 230 °C (446 °F)
C Difference in temperature for PFA (conductive) maximum 60 °C (140 °F)

6.1.2 Taking the switch point into consideration

The following are typical switch points, depending on the orientation of the level switch

Water +23 °C (+73 °F)

Minimum distance between the tuning fork and the tank wall or pipe wall: 10 mm (0.39 in)

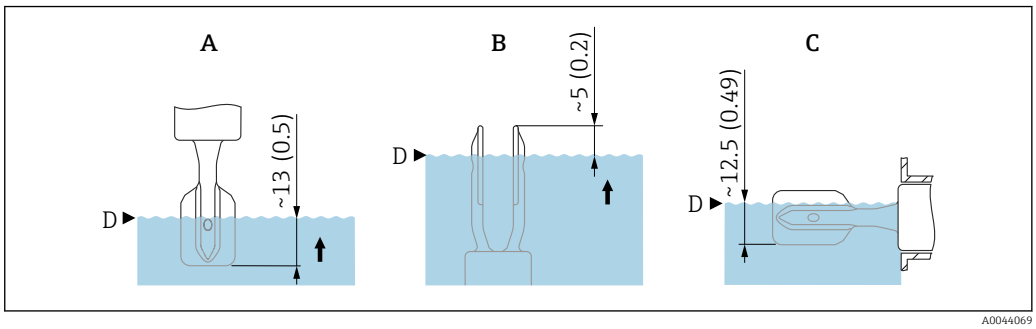

5 *Typical switch points. Unit of measurement mm (in)*

A Installation from above
B Installation from below
C Installation from the side
D Switch point

6.1.3 Take viscosity into consideration

Viscosity values
- Low viscosity : < 2 000 mPa·s
- High viscosity: > 2 000 to 10 000 mPa·s

Low viscosity

Low viscosity, e.g. water: < 2 000 mPa·s

It is permitted to position the tuning fork within the installation socket.

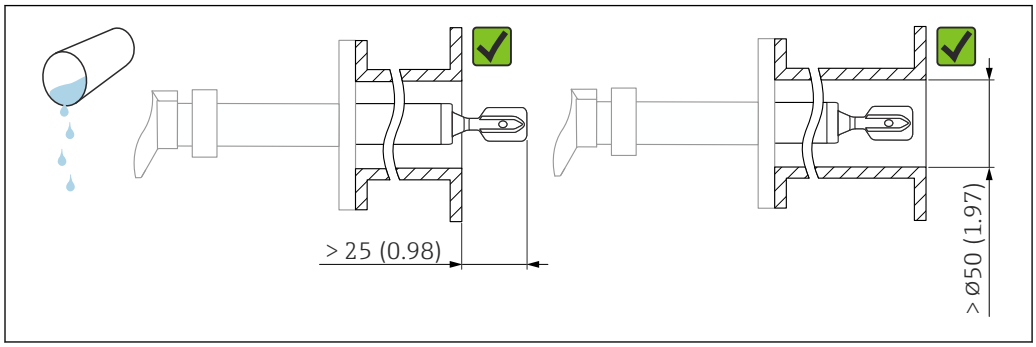

6 *Installation example for low-viscosity liquids. Unit of measurement mm (in)*

High viscosity

NOTICE

Highly viscous liquids may cause switching delays.

- Make sure that the liquid can run off the tuning fork easily.
- Deburr the socket surface.

High viscosity, e.g. viscous oils: ≤ 10 000 mPa·s

The tuning fork must be located outside the installation socket!

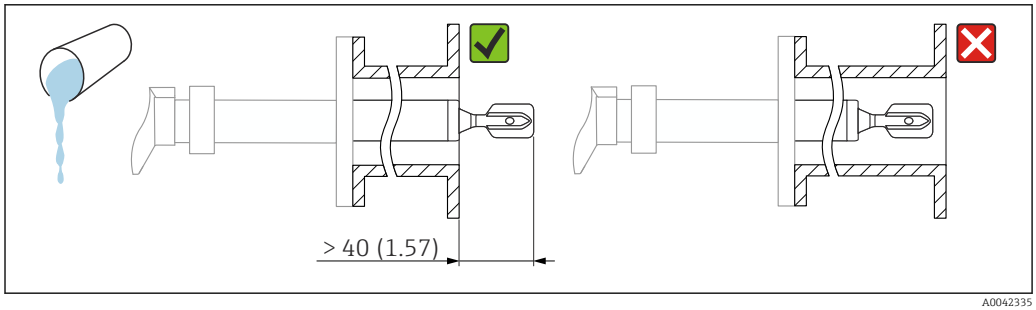

7 *Installation example for a highly viscous liquid. Unit of measurement mm (in)*

6.1.4 Avoid buildup

- Use short installation sockets to ensure that the tuning fork projects freely into the vessel
- Leave sufficient distance between the buildup expected on the tank wall and the tuning fork

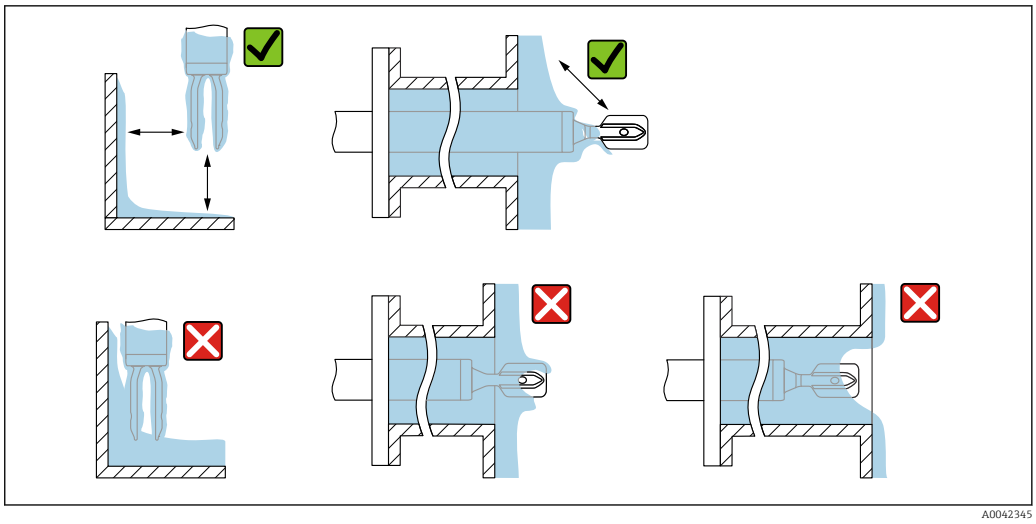

8 *Installation examples for a highly viscous process medium*

6.1.5 Take clearance into consideration

Allow sufficient space outside the tank for mounting, connection and settings involving the electronic insert.

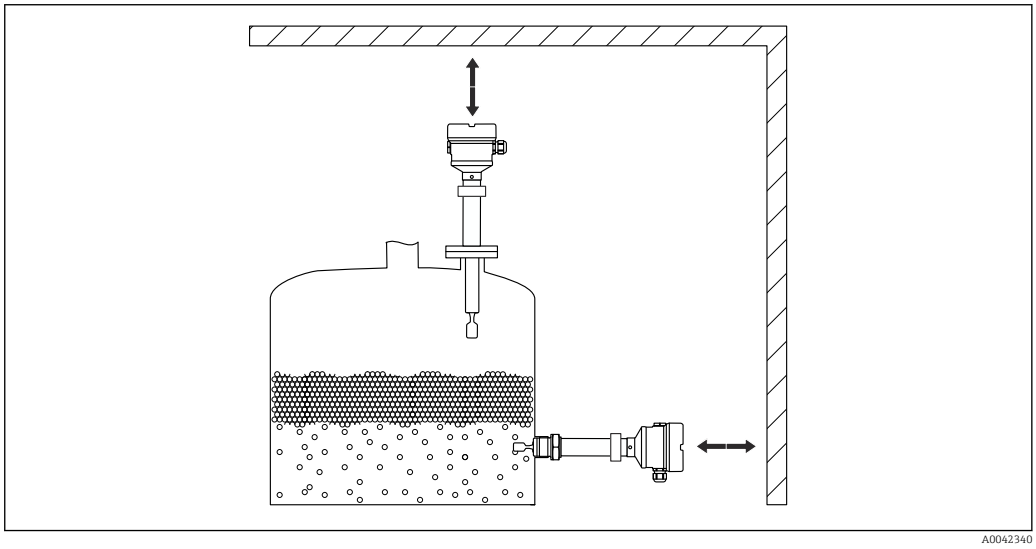

9 *Take clearance into consideration*

6.1.6 Support the device

NOTICE

If the device is supported incorrectly, shocks and vibrations can damage the coated surface.

- Use suitable supports only.

Support the device in the event of severe dynamic load. Maximum lateral loading capacity of the pipe extensions and sensors: 75 Nm (55 lbf ft).

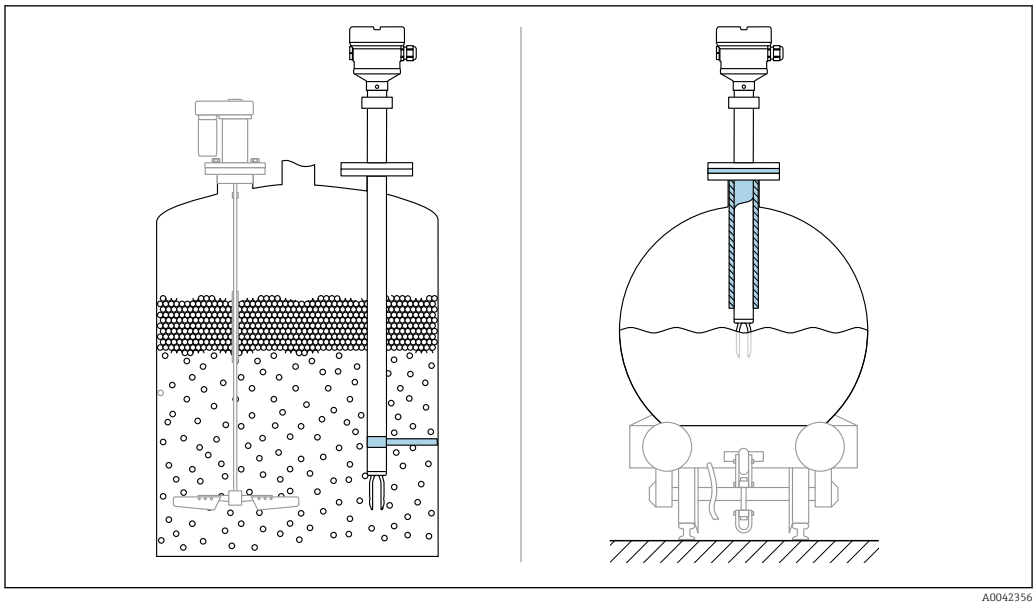

10 *Examples of support in the event of dynamic load*

Marine approval: In the case of pipe extensions or sensors longer than 1 600 mm (63 in), a support is needed at least every 1 600 mm (63 in).

6.2 Installing the device

6.2.1 Installation

Align the vibrating fork using the marking.

The vibrating fork can be aligned using the marking in such a way that the medium drains off easily and buildup is avoided.

- Markings for threaded connections: Circle (material specification/thread designation opposite)
- Markings for flange connections: line or double line

In addition, the threaded connections have a matrix code that is **not** used for alignment.

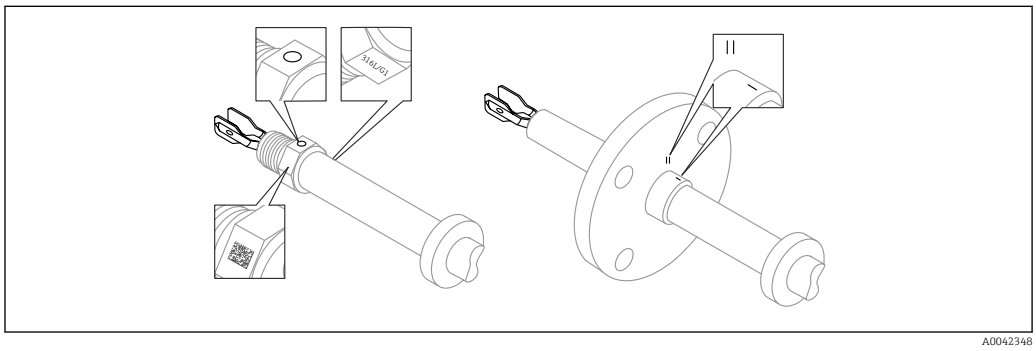

11 *Position of the vibrating fork when installed horizontally in the vessel using the marking*

Installing the device in piping

- Flow velocity up to 5 m/s with a viscosity of 1 mPa·s and density of 1 g/cm³ (62.4 lb/ft³) (SGU).
  Check for correct functioning in the event of other process medium conditions.
- The flow will not be significantly impeded if the tuning fork is correctly aligned and the marking is pointing in the direction of flow.
- The marking is visible when installed

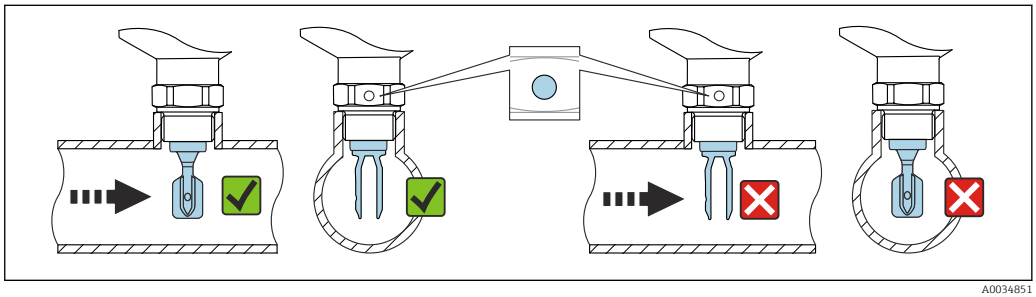

12 *Installation in pipes (take fork position and marking into consideration)*

Screwing in the device

- Turn by the hex bolt only, 15 to 30 Nm (11 to 22 lbf ft)
- Do not turn at the housing!

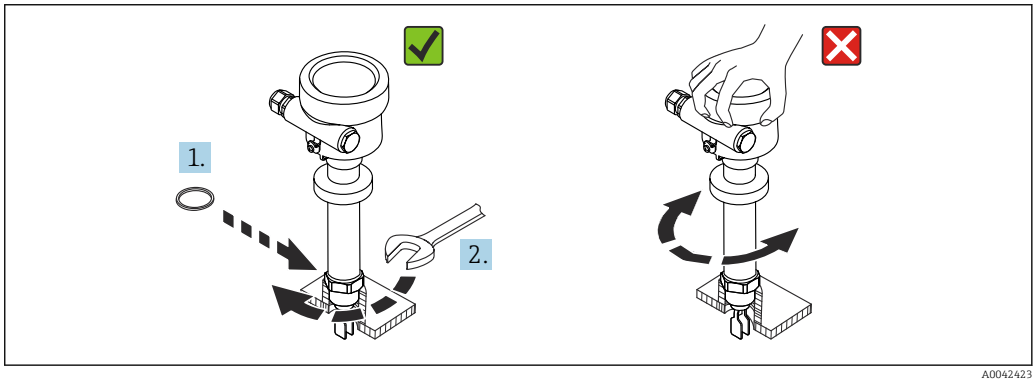

13 *Screwing in the device*

Aligning the cable entry

All housings can be aligned. Forming a drip loop on the cable prevents moisture from entering the housing.

Housing without set screw

The device housing can be rotated up to 350°.

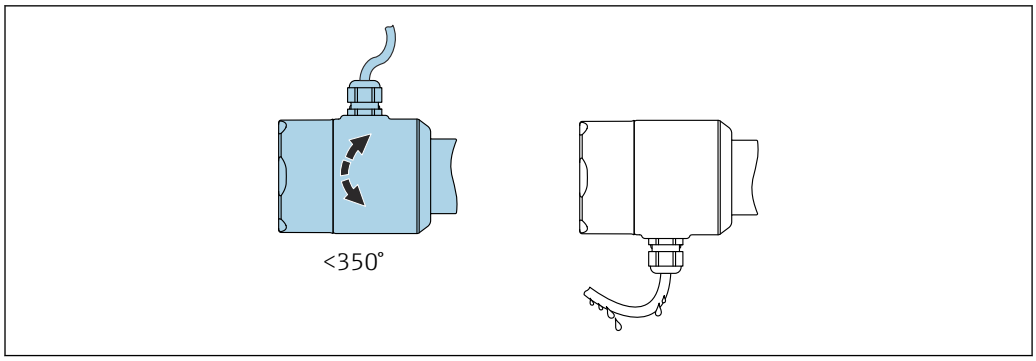

14 *Housing without set screw; form a drip loop on the cable.*

Housing with locking screw

NOTICE

The locking screw is not sufficiently tightened when the device is delivered.

The housing may rotate and become loose due to vibration.

- Tighten the locking screw to 3.5 Nm (2.58 lbf ft).

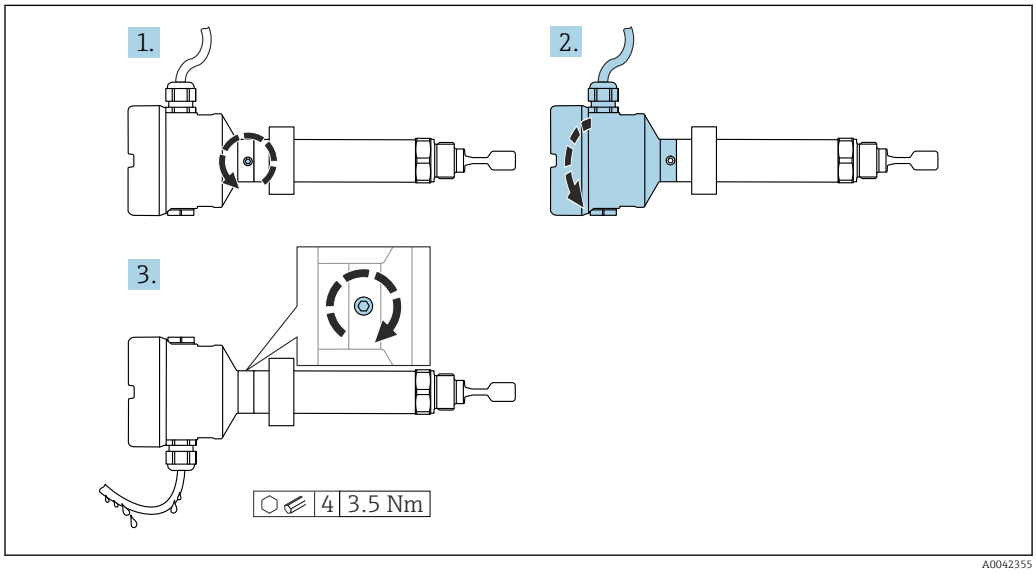

15 *Housing with external locking screw; form a drip loop on the cable*

1. Loosen the external locking screw (maximum 1.5 turns).
2. Turn the housing and align the cable entry.
3. Tighten the external locking screw.

Rotating the housing

The housing can be rotated up to 380° by loosening the locking screw.

NOTICE

The housing cannot be completely unscrewed.

- Loosen the external locking screw by a maximum of 1.5 turns. If the screw is turned further or completely removed (beyond the screw lifting point), small parts (counter disk) may become loose and fall out.
- Tighten the locking screw (hex socket 4 mm (0.16 in)) to 3.5 Nm (2.58 lbf ft) ±0.3 Nm (±0.22 lbf ft).

Closing the housing covers

NOTICE

Thread and housing cover damaged from dirt and fouling!

- Remove dirt (e.g. sand) on the thread of the covers and housing.
- If you continue to encounter resistance when closing the cover, check the thread again for fouling.

Housing thread
The threads of the electronics and connection compartment can be coated with an anti-friction coating.
The following applies for all housing materials:
Do not lubricate the housing threads.

Turning the display module

WARNING

Opening the device in hazardous environments when the supply voltage is connected
Explosion hazard due to live electrical energy.

- Do not open devices with Ex d or Ex t approval as long as the supply voltage is connected.
- Before opening the device, switch off the supply voltage and ensure no voltage is present.

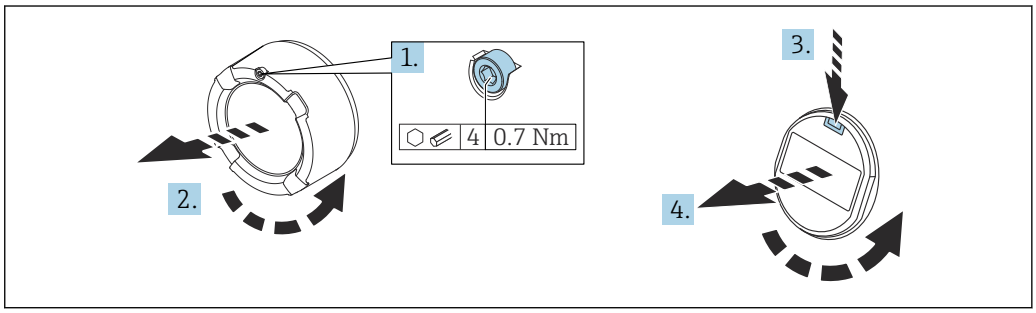

A0038224

1. If fitted: release the screw of the cover lock for the electronics compartment cover using the Allen key.
2. Unscrew the cover from the housing and inspect the cover seal.
3. Press the release mechanism and remove the display module.
4. Turn the display module to the desired position: maximum 4 × 90 ° in each direction.
5. Insert the display module into the desired position until it clicks into place.
6. Screw the cover tightly back onto the housing.
7. If fitted: tighten the screw of the cover lock using the Allen key 0.7 Nm (0.52 lbf ft) ±0.2 Nm (±0.15 lbf ft).

In the case of a dual-compartment housing, the display can be mounted in the electronics compartment as well as in the connection compartment.

Changing the installation position of the display module

The installation position of the display can be changed in the case of the dual compartment housing, L-form.

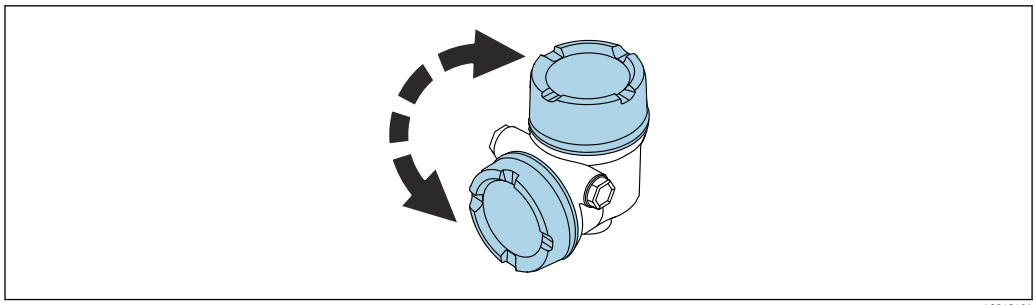

A0048401

WARNING

Opening the device in hazardous environments when the supply voltage is connected

Explosion hazard due to live electrical energy.

- Do not open devices with Ex d or Ex t approval as long as the supply voltage is connected.
- Before opening the device, switch off the supply voltage and ensure no voltage is present.

1 →

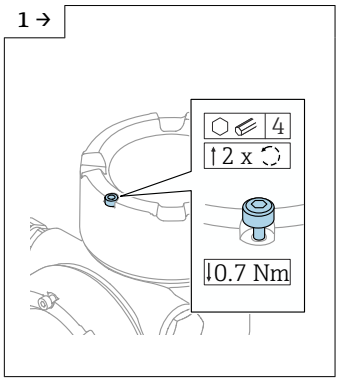

A0046831

- If fitted: release the screw of the cover lock for the display cover using the Allen key.

2 →

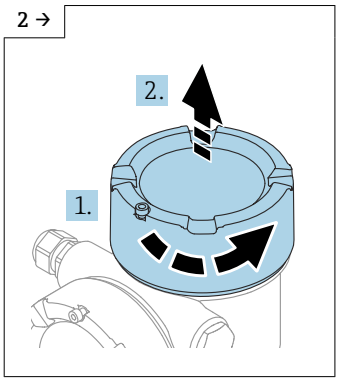

A0046832

- Unscrew the display cover and check the cover seal.

3 →

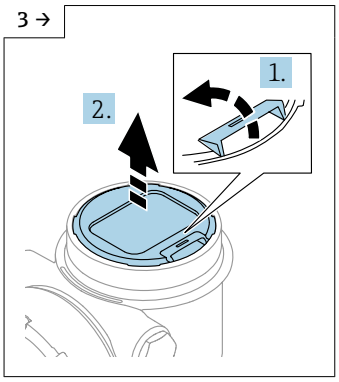

A0046833

- Press the release mechanism, remove the display module.

4 →

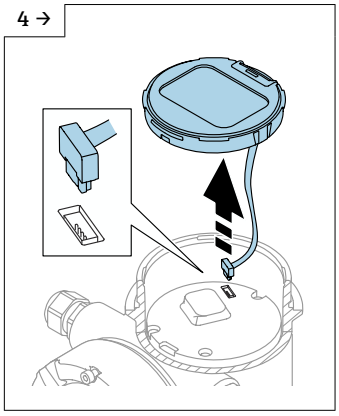

A0046834

- Release the plug connection.

5 →

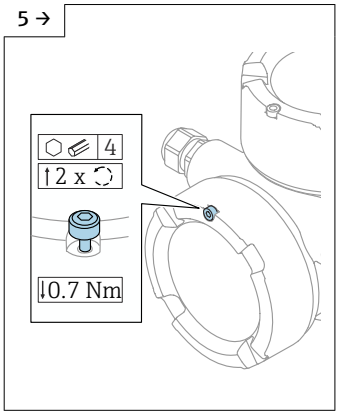

A0046923

- If fitted: release the screw of the cover lock for the connection compartment cover using the Allen key.

6 →

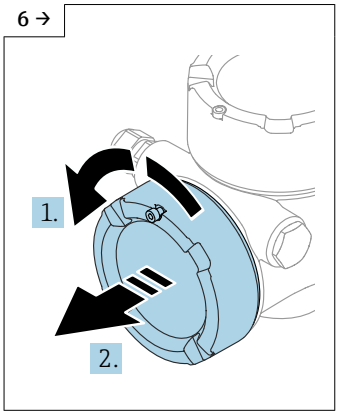

A0046924

- Unscrew the connection compartment cover, check the cover seal. Screw this cover onto the electronics compartment instead of the display cover. If fitted: tighten the screw of the cover lock using the Allen key

7 →

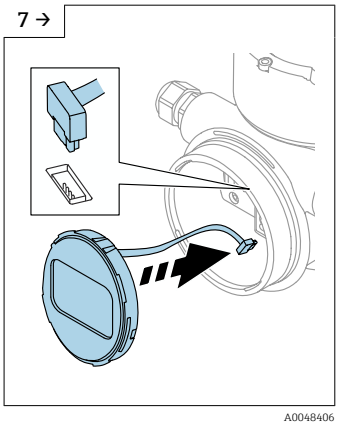

- Plug in the connection for the display module in the connection compartment.
- Insert the display module into the desired position until it clicks into place.

8

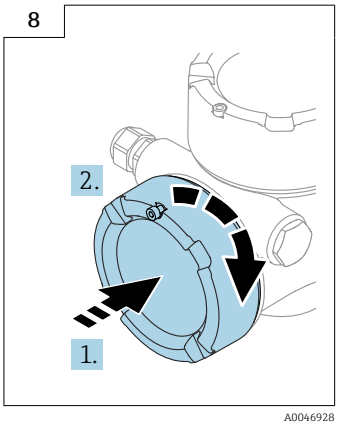

- Screw the display cover firmly back onto the housing. If fitted: tighten the screw of the cover lock using the Allen key 0.7 Nm (0.52 lbf ft).

6.3 Sliding sleeves

For more details, see the "Accessories" section.

Special Documentation SD02398F (Installation Instructions)

6.4 Post-mounting check

❑ Is the device undamaged (visual inspection)?

❑ Are the measuring point number and labeling correct (visual inspection)?

❑ Is the device adequately protected from precipitation and direct sunlight?

❑ Is the device properly secured?

❑ Does the device comply with the measuring point specifications?

For example:
- Process temperature
- Process pressure
- Ambient temperature
- Measuring range

7 Electrical connection

7.1 Connecting requirements

7.1.1 Cover with securing screw

The cover is locked by a securing screw in devices for use in hazardous areas with certain explosion protection.

NOTICE

If the securing screw is not positioned correctly, the cover cannot provide secure sealing.

- Open the cover: slacken the screw of the cover lock with a maximum of 2 turns so that the screw does not fall out. Fit the cover and check the cover seal.
- Close the cover: screw the cover securely onto the housing, making sure that the securing screw is positioned correctly. There should not be any gap between the cover and housing.

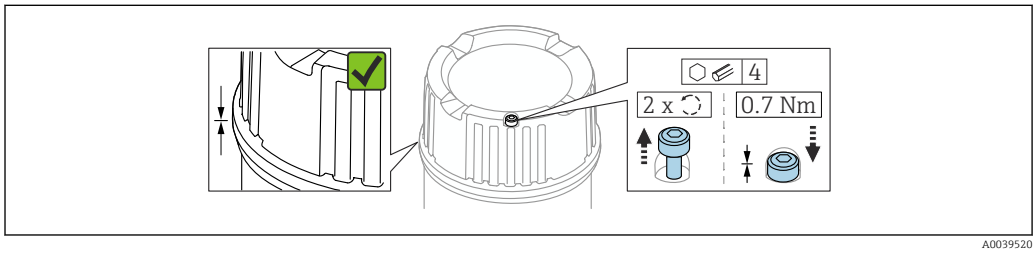

16 *Cover with securing screw*

7.1.2 Potential equalization

WARNING

Ignitable sparks or excessively high surface temperatures.

Explosion hazard!

- Please refer to the separate documentation on applications in hazardous areas for the safety instructions.

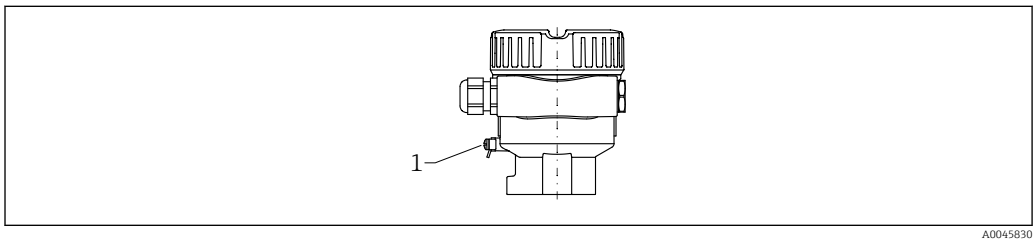

1 *Ground terminal for connecting the potential matching line (example)*

If necessary, the potential matching line can be connected to the external ground terminal of the transmitter before the device is connected.

For optimum electromagnetic compatibility:
- Potential matching line as short as possible
- Observe a cross-section of at least 2.5 mm^2 (14 AWG)

7.2 Connecting the device

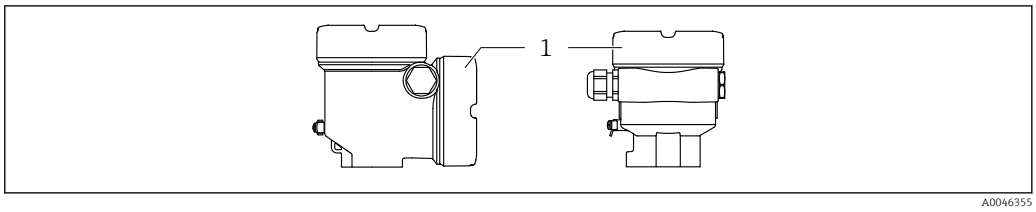

1 Connection compartment cover

Housing thread
The threads of the electronics and connection compartment can be coated with an anti-friction coating.
The following applies for all housing materials:
Do not lubricate the housing threads.

7.2.1 Supply voltage

- U = DC 10.5 to 35 V (Ex d, Ex e, not Ex)
- U = DC 10.5 to 30 V (Ex i)
- Rated current: 4 to 20 mA HART

- The power unit must be tested to ensure it meets safety requirements (e.g. PELV, SELV, Class 2) and must comply with the relevant protocol specifications.
- Comply with the following according to IEC 61010-1: provide a suitable circuit breaker for the device.

Depending on the supply voltage at the moment the device is switched on, the backlight is switched off (supply voltage < 13 V).

7.2.2 Terminals

- Supply voltage and internal ground terminal: 0.5 to 2.5 mm^2 (20 to 14 AWG)
- External ground terminal: 0.5 to 4 mm^2 (20 to 12 AWG)

7.2.3 Cable specification

The cable outer diameter depends on the cable entry used.
Cable outer diameter:
- Plastic gland: Ø5 to 10 mm (0.2 to 0.38 in)
- Nickel-plated brass gland: Ø7 to 10.5 mm (0.28 to 0.41 in)
- Stainless steel gland: Ø7 to 12 mm (0.28 to 0.47 in)

7.2.4 4 to 20 mA HART

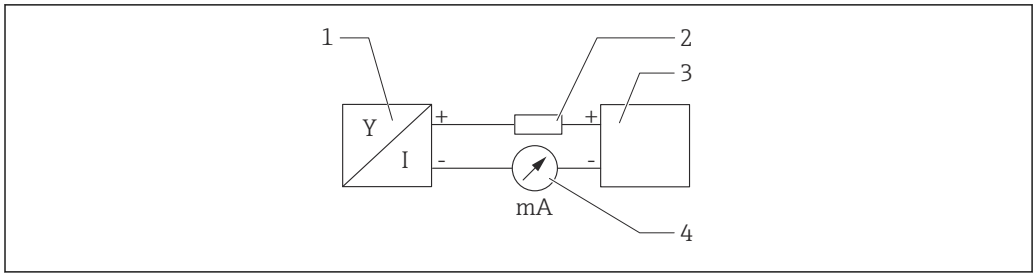

17 Block diagram of HART connection

1 Device with HART communication
2 HART communication resistor
3 Power supply
4 Multimeter or ammeter

The HART communication resistor of 250 Ω in the signal line is always necessary in the case of a low-impedance power supply.

Take the voltage drop into consideration:
Maximum 6 V for a 250 Ω communication resistor

7.2.5 Overvoltage protection

Devices without optional overvoltage protection

Equipment from Endress+Hauser fulfills the requirements of the product standard IEC 61326-1 (Table 2 Industrial Environment).

Depending on the type of connection (DC power supply, input line, output line) and in accordance with IEC 6132 6-1, different test levels are used to prevent transient overvoltages (IEC 61000-4-5 Surge): Test level for DC power supply lines and IO lines: 1 000-V-wire to ground

Devices with optional overvoltage protection

- Spark-over voltage: min. DC 400 V
- Tested in accordance with:
  - IEC 60079-14 Subsection 12.3
  - IEC 60060-1 Section 7
- Nominal discharge current: 10 kA

NOTICE

The device can be damaged by excessively high electrical voltages.

▶ Always ground the device with integrated overvoltage protection.

Overvoltage category

Overvoltage category II

7.2.6 Wiring

⚠ WARNING

Supply voltage might be connected!
Risk of electric shock and/or explosion!

- ▶ If the device is used in hazardous areas, make sure to comply with national standards and the specifications in the Safety Instructions (XAs). The specified cable gland must be used.
- ▶ The supply voltage must match the specifications on the nameplate.
- ▶ Switch off the supply voltage before connecting the device.
- ▶ If necessary, the potential matching line can be connected to the outer ground terminal of the transmitter before the device is connected.
- ▶ A suitable circuit breaker should be provided for the device in accordance with IEC 61010.
- ▶ The cables must be adequately insulated, with due consideration given to the supply voltage and the overvoltage category.
- ▶ The connecting cables must offer adequate temperature stability, with due consideration given to the ambient temperature.
- ▶ Only operate the device with the covers closed.

1. De-energize the system.
2. Release the cover lock (if provided).
3. Unscrew the cover.
4. Guide the cables into the cable glands or cable entries. Use a suitable tool with width across flats AF24/25 (8 Nm (5.9 lbf ft)) for the M20 cable gland.
5. Connect the cables.
6. Tighten the cable glands or cable entries so that they are leak-tight. Counter-tighten the housing entry.
7. Screw the cover securely back onto the connection compartment.
8. If provided: tighten the screw of the cover lock using the Allen key 0.7 Nm (0.52 lbf ft) ±0.2 Nm (0.15 lbf ft).

7.2.7 Terminal assignment

Single compartment housing

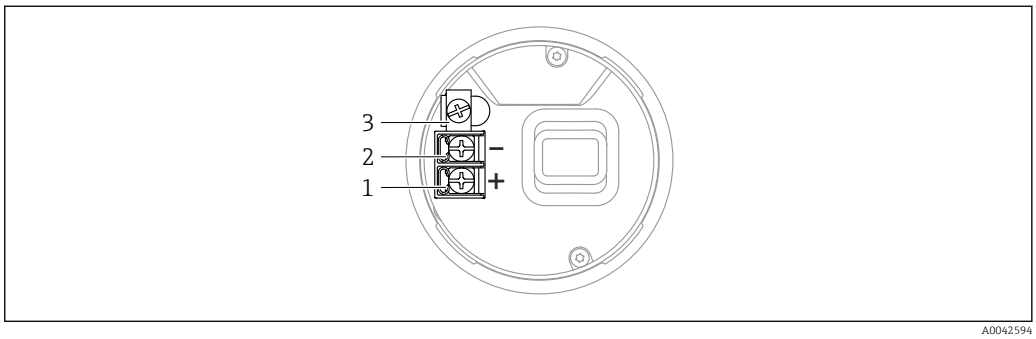

18 Connection terminals and ground terminal in the connection compartment, single compartment housing

1 Positive terminal
2 Negative terminal
3 Internal ground terminal

Dual-compartment housing, L-form

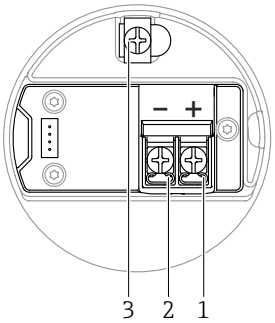

A0045842

19 Connection terminals and ground terminal in the connection compartment, dual-compartment housing, L-form

1 *Plus terminal*
2 *Minus terminal*
3 *Internal ground terminal*

7.2.8 Cable entries

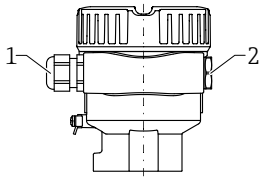

A0045831

20 Example

1 *Cable entry*
2 *Blind plug*

The type of cable entry depends on the device version ordered.

7.2.9 Available device plugs

In the case of devices with a plug, it is not necessary to open the housing for connection purposes.

Use the enclosed seals to prevent the penetration of moisture into the device.

Various M12 sockets are available as accessories for devices with M12 plugs.

For more details, see the "Accessories" section.

M12 plug

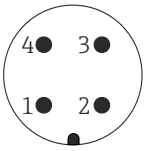

A0011175

21 View of the connection on the device

1 *Signal +*
2 *Not used*
3 *Signal –*
4 *Ground*

7.3 Ensuring the degree of protection

7.3.1 Degree of protection

Testing according to IEC 60529 and NEMA 250

IP68 test condition: 1.83 m H_2O for 24 h

Housing
See cable entries

Cable entries
- M20 coupling, plastic, IP66/68 NEMA Type 4X/6P
- M20 coupling, nickel-plated brass, IP66/68 NEMA Type 4X/6P
- M20 coupling, 316L, IP66/68 NEMA Type 4X/6P
- M20 thread, IP66/68 NEMA Type 4X/6P
- G ½ thread, NPT ½ , IP66/68 NEMA Type 4X/6P

Degree of protection for M12 plug
- When housing is closed and connecting cable is plugged in: IP66/67 NEMA Type 4X
- When housing is open or connecting cable is not plugged in: IP20, NEMA Type 1

NOTICE

M12 plug: Loss of IP protection class due to incorrect installation!
- ▶ The degree of protection only applies if the connecting cable used is plugged in and screwed tight.
- ▶ The degree of protection only applies if the connecting cable used is specified according to IP67 NEMA Type 4X.

If the "M12 plug" option is selected as the electrical connection, **IP66/67 NEMA Type 4X** applies for all housing types.

7.4 Post-connection check

- ❑ Are the device or cables undamaged (visual inspection)?
- ❑ Do the cables used comply with the requirements?
- ❑ Do the mounted cables have strain relief?
- ❑ Cable glands mounted, securely tightened and leak-tight?
- ❑ Does the supply voltage correspond to the specifications on the nameplate?
- ❑ No reverse polarity, terminal assignment correct?
- ❑ Are all the housing covers properly installed and tightened?

❑Optional: Is the cover tightened with a securing screw?

8 Operation options

8.1 Overview of operation options

- Operation via operating keys and DIP switches on the electronic insert
- Operation via optical operating keys on the device display (optional)
- Operation via Bluetooth® wireless technology (with optional device display, including Bluetooth® wireless technology) with SmartBlue app, Field Xpert or DeviceCare
- Operation via operating tool (Endress+Hauser FieldCare/DeviceCare, handheld terminal, AMS, PDM, ...)

8.2 FEL60H electronic insert

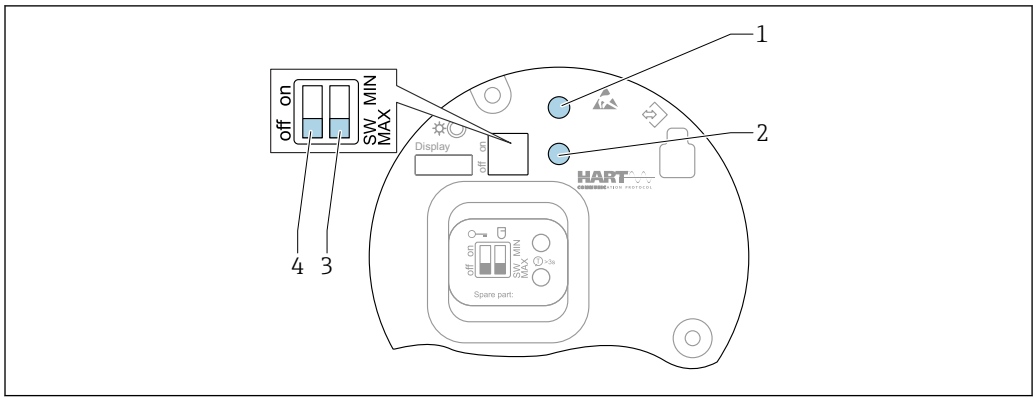

22 *Operating keys and DIP switch on FEL60H electronic insert*

1 Operating key for reset password
1+2 Operating keys for device reset (as-delivered state)
2 Operating key for Proof test
3 DIP switch for safety function
4 DIP switch for locking and unlocking the device

1: Operating key for reset password:
- For login via Bluetooth® wireless technology
- For Maintenance user role

1 + 2: Operating keys for resetting the device:
- Reset the device to the order configuration
- Press both keys 1 + 2 simultaneously

2: Operating key for Proof test:
- The output changes from the OK status to demand mode
- Press the key for > 3 s

3: DIP switch for safety function:
- SW: When the switch is set to "SW", the MIN or MAX setting is defined by the software (MAX = default value)
- MIN: In the MIN switch position, the value is permanently set to MIN irrespective of the software

4: Overview of the operating keys and DIP switch functions:
- Switch position on: Device locked
- Switch position off: Device unlocked

The minimum detection and maximum detection operating modes can be switched directly on the electronic insert:
- MIN (minimum detection): when the vibrating fork is uncovered, the output switches to demand mode, e.g. use to prevent pumps from running dry
- MAX (maximum detection): when the vibrating fork is covered, the output switches to demand mode, e.g. use as overfill protection system

The setting of the DIP switches on the electronic insert has priority over the settings made via other operation methods (e.g. FieldCare/DeviceCare).

Density switchover: A density preset can be ordered as an option or configured via the display, Bluetooth® wireless technology and HART.

8.3 Functional test using operating key on electronic insert

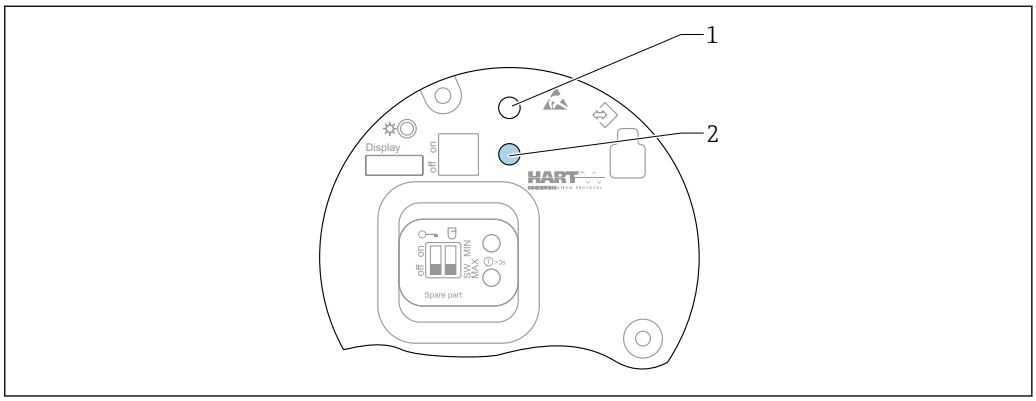

A0046571

23 Operating keys on the FEL60H electronic insert

1 Operating key for reset password
2 Operating key for Proof test (> 3 s)

When performing the proof test in safety instrumented systems according to SIL or WHG: Comply with the instructions in the Safety Manual.

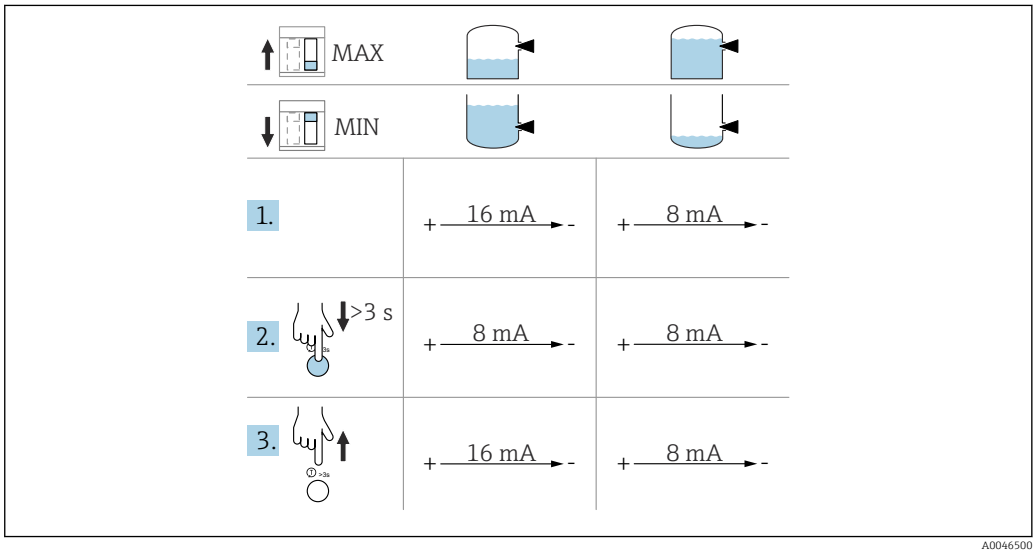

A0046500

1. Make sure that no unintended switching operations are triggered!
   ↳ The functional test must be performed in the OK status: MAX safety and sensor free or MIN safety and sensor covered.
2. Press the operating key for the proof test on the electronic insert for at least 3 s.
   ↳ The device functional test is performed.
   The output changes from the OK status to demand mode.
3. Release the operating key.
   ↳ If the internal test is passed, the device switches back to normal operation.

Duration of function check: 10 s at least

If the key is pressed for > 10 s, the device remains in demand mode until the key is released.

If the housing may not be opened during operation due to explosion protection requirements, e.g. Ex d /XP, the function test can also be started via the digital communication interfaces (HART, CDI, Bluetooth) with the aid of the appropriate operating tool (FieldCare, DeviceCare, SmartBlue, AMS, PDM, etc.).

8.4 Structure and function of the operating menu

The differences between the structure of the operating menus of the local display and the Endress+Hauser FieldCare or DeviceCare operating tools can be summarized as follows:

The local display is suitable for configuring simple applications.

The operating tools (FieldCare, DeviceCare, SmartBlue, AMS, PDM, ...) can be used to configure the parameters of wide-ranging applications.

Wizards help the user to commission the various applications. The user is guided through the individual configuration steps.

8.4.1 User roles and related access authorization

The two user roles **Operator** and **Maintenance** (as-delivered state) have different write access to the parameters if a device-specific access code has been defined. This access code protects the device configuration from unauthorized access.

If an incorrect access code is entered, the user obtains the access rights of the **Operator** role.

8.5 Access to the operating menu via the local display

8.5.1 Device display (optional)

Possible to operate the optical operating keys through the cover. No need to open the device.

Functions:
- Display measured values and fault and notice messages
- Background lighting, which switches from green to red in the event of an error
- The device display can be removed for easier operation

Backlighting is switched on or off depending on the supply voltage and the current consumption.

The device display is optionally available with Bluetooth® wireless technology.

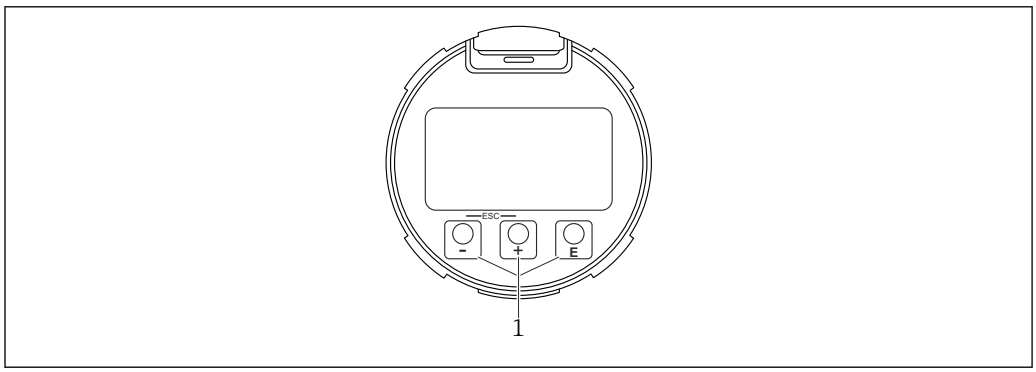

A0039284

24 Graphic display with optical operating keys (1)

- ⊞ key
  - Navigate downwards in the selection list
  - Edit the numerical values and characters within a function
- ⊟ key
  - Navigate upwards in the selection list
  - Edit the numerical values and characters within a function
- Ⓔ key
  - Change from main display to main menu
  - Confirm entry
  - Jump to the next item
  - Selection of a menu item and activation of edit mode
  - Unlock/lock the display operation
  - Press and hold the Ⓔ key to display a short description of the selected parameter (if available)
- ⊞ key and ⊟ key (ESC function)
  - Exit edit mode for a parameter without saving the changed value
  - Menu at a selection level: pressing the keys simultaneously takes the user back up a level in the menu
  - Press and hold the keys simultaneously to return to the upper level

8.5.2 Operation via Bluetooth® wireless technology (optional)

Prerequisite
- Device with device display including Bluetooth® wireless technology
- Smartphone or tablet with Endress+Hauser SmartBlue app or PC with DeviceCare from version 1.07.05 or Field Xpert SMT70

The connection has a range of up to 25 m (82 ft). The range can vary depending on environmental conditions such as attachments, walls or ceilings.

The operating keys on the display are locked as soon as a Bluetooth® connection is established.

An available Bluetooth® connection is indicated by a flashing Bluetooth symbol.

If the Bluetooth® display is removed from one device and installed in another device.
- All login data are stored only in the Bluetooth® display and not in the device.
- The password changed by the user is also stored in the Bluetooth® display.

Special Documentation SD02530P

Operation via SmartBlue app

The device can be operated and configured with the SmartBlue App.

- The SmartBlue app must be downloaded onto a mobile device for this purpose
- For information on the compatibility of the SmartBlue app with mobile devices, see **Apple App Store (iOS devices)** or **Google Play Store (Android devices)**
- Incorrect operation by unauthorized persons is prevented by means of encrypted communication and password encryption.
- The Bluetooth® function can be deactivated after initial device setup.

ANDROID APP ON Google Play

Download on the App Store

A0033202

25 QR code for free Endress+Hauser SmartBlue App

Download and installation:

1. Scan the QR code or enter **SmartBlue** in the search field of the Apple App Store (iOS) or Google Play Store (Android).
2. Install and start the SmartBlue app.
3. For Android devices: enable location tracking (GPS) (not required for iOS devices).
4. Select a device that is ready to receive from the device list displayed.

Login:

1. Enter the user name: admin
2. Enter the initial password: serial number of the device
3. Change the password after logging in for the first time

Information on password and reset code

For devices that meet the requirements of IEC 62443-4-1 "Secure product developement lifecycle management" ("ProtectBlue"):
- If the user-defined password is lost: refer to the user management instructions and the reset button in the operating manual.
- Refer to the associated Security Manual (SD).

For all other devices (without "ProtectBlue"):
- If the user-defined password is lost, access can be restored via a reset code. The reset code is the serial number of the device in reverse. The original password is once again valid after the reset code has been entered.
- The reset code can also be changed in addition to the password.
- If the user-defined reset code is lost, the password can no longer be reset via the SmartBlue app. Contact Endress+Hauser Service in this case.

8.6 Access to the operating menu via the operating tool

Access via the operating tool is possible:

- Via HART communication, e.g. Commubox FXA195
- Via Endress+Hauser Commubox FXA291
  With the Commubox FXA291, a CDI connection can be established with the device interface and a Windows PC/notebook with a USB port

8.7 HistoROM data management

When replacing the electronic insert, the stored data is transferred by reconnecting the HistoROM.

The device serial number is saved in the HistoROM. The electronics serial number is saved in the electronics.

9 System integration

9.1 Overview of device description files

- Manufacturer ID: 17 (0x11)
- Device type code: 0x11C4
- Device revision: 1
- HART specification: 7

- DD revision: 1
- Device description files (DTM, DD) information and files at:
  - www.endress.com
  - www.fieldcommgroup.org
- HART load: min. 250 Ω

9.2 Measured variables via HART protocol

The following measured values are assigned to the device variables at the factory:

Device variable	Measured value
The **Primary variable (PV)** parameter (Primary variable) [1]	Level limit detection [2]
Secondary variable (SV) parameter (Secondary variable)	The **Sensor frequency** option [3]
Tertiary variable (TV) parameter (Third variable)	Fork state [4]
Quaternary variable (QV) parameter (Quaternary variable)	Sensor temperature

1) **Primary variable (PV)** parameter is always applied to the current output.
2) For the Level limit detection, the initial state depends on the fork state (uncovered/covered) and the safety function (MIN/MAX)
3) **Sensor frequency** option is the oscillation frequency of the fork
4) Fork state (Fork covered/Fork uncovered)

The assignment of the measured values to the device variables can be changed in the following submenu:

Navigation: Application → HART output → HART output

In a HART Multidrop loop, only one device may use the analog current value for signal transmission. For all other devices in the **Loop current mode** parameter, select the **Disable** option.

Navigation: Application → HART output → Configuration → Loop current mode → **Disable** option

9.2.1 Device variables and measured values

The following codes are assigned to the device variables at the factory:

Device variable	Device variable code
Level limit detection	0
Sensor frequency	1
Fork state	2
Sensor temperature	3
Terminal current	5
Terminal voltage	6

The device variables can be queried by a HART® master using HART® command 9 or 33.

9.2.2 System units

The oscillation frequency is specified in Hz. The temperature can be displayed in °C, °F or K.

10 Commissioning

10.1 Preparations

WARNING

The settings of the current output are relevant for safety!
Incorrect settings may cause the product to overflow or a pump to run dry.

- The setting for the current output depends on the setting in the **Assign PV** parameter.
- After changing the setting of the current output: check the settings for the range (Lower range value output (LRV) and Upper range value output (URV)) and reconfigure them if necessary!

10.1.1 As-delivered state

If no customized settings were ordered:

- **Assign PV** parameter Level limit detection (8/16 mA mode)
- MAX safety mode
- Alarm condition set to min. 3.6 mA
- DIP switch for locking in OFF position
- Bluetooth switched on
- Density range > 0.7 g/cm³ (43.7 lb/ft³)
- Switching times 0.5 s when the fork is covered and 1.0 s when it is uncovered
- HART burst mode switched off

10.2 Post-installation and function check

Before commissioning the measuring point, check whether the post-installation and post-connection checks have been performed.

Post-mounting check

Post-connection check

10.3 Establishing a connection via FieldCare and DeviceCare

10.3.1 Via HART protocol

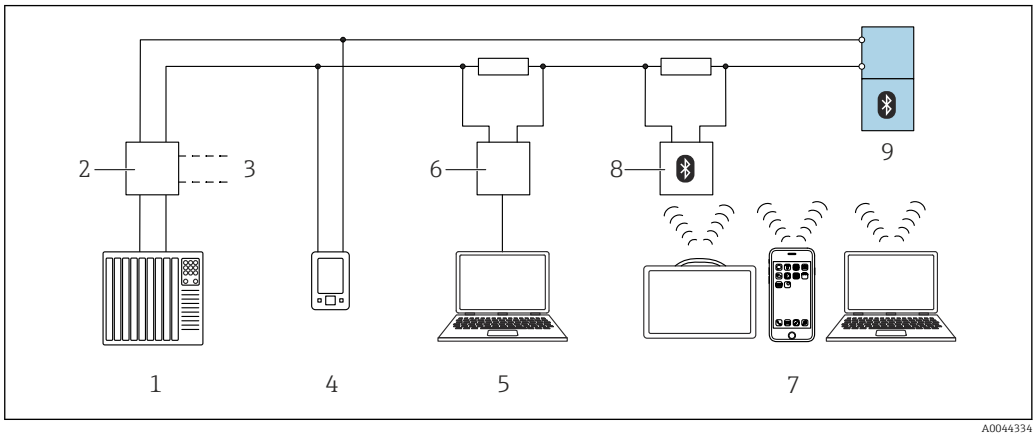

26 Options for remote operation via HART protocol

1 *PLC (programmable logic controller)*
2 *Transmitter power supply unit, e. g. RN42 (with communication resistor)*
3 *Connection for Commubox FXA195 and AMS Trex Device Communicator*
4 *AMS Trex Device Communicator*
5 *Computer with operating tool e.g. DeviceCare, FieldCare, AMS Device View, SIMATIC PDM)*
6 *Commubox FXA195 (USB)*
7 *Field Xpert SMT70/SMT77, smartphone or computer with operating tool (e.g. DeviceCare, SmartBlue app)*
8 *Bluetooth modem with connecting cable (e.g. VIATOR)*
9 *Transmitter*

10.3.2 FieldCare/DeviceCare via service interface (CDI)

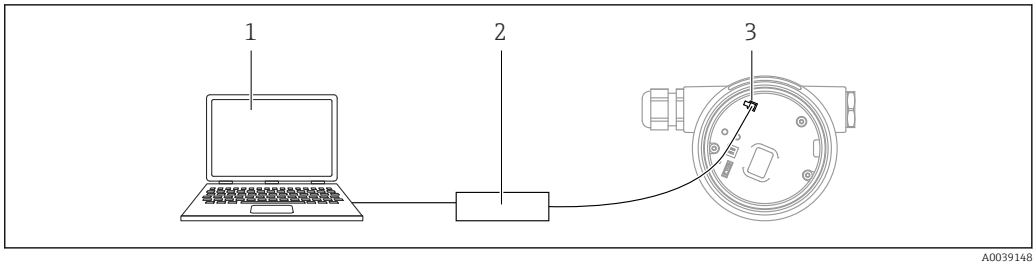

1 *Computer with FieldCare/DeviceCare operating tool*
2 *Commubox FXA291*
3 *Service interface (CDI) of the device (= Endress+Hauser Common Data Interface)*

At least 22 mA is required to update (flash) the device firmware.

10.4 Configuring the device address via software

See **HART address** parameter.

Navigation: Application → HART output → Configuration → HART address

10.5 Configuring the operating language

10.5.1 Local display

Configuring the language of the local display

1. Press the Ⓔ key for at least 2 s.
   ↳ A dialog box appears.
2. Unlock the display operation.
3. Select the **Language** parameter in the main menu.
4. Press the Ⓔ key.
5. Select the desired language with the ⊞ key.
6. Press the Ⓔ key.

Display operation locks automatically (except in the **Safety mode** wizard):
- after 1 min on the main page if no key has been pressed
- after 10 min within the operating menu if no key has been pressed

10.5.2 Operating tool

Set display language

Navigation: System → Display → Language

Selection in **Language** parameter; Visibility depends on order options or device settings

10.5.3 FieldCare

1. In the "Extras" menu, click "Options".
2. Set the preferred language for FieldCare in the "Language" section.

Setting the language for the local display via FieldCare

Navigation: System → Display → Language

▶ Set the desired language in the **Language** parameter.

10.5.4 DeviceCare

Click the menu icon:

A0046404

Click "Settings" and select the desired language:

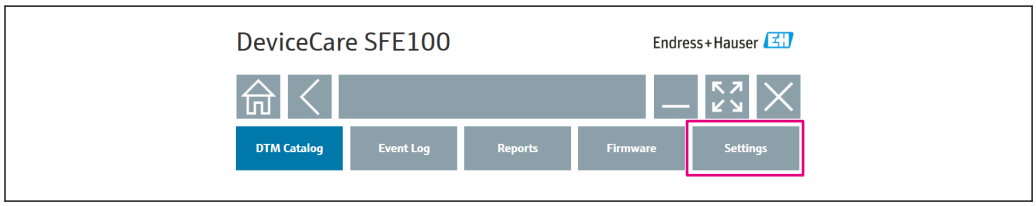

A0046406

Setting the language for the local display via DeviceCare

Navigation: System → Display → Language

- Set the desired language in the **Language** parameter.

10.6 Configuring the device

10.6.1 Commissioning with DIP switch and operating keys on the electronic insert

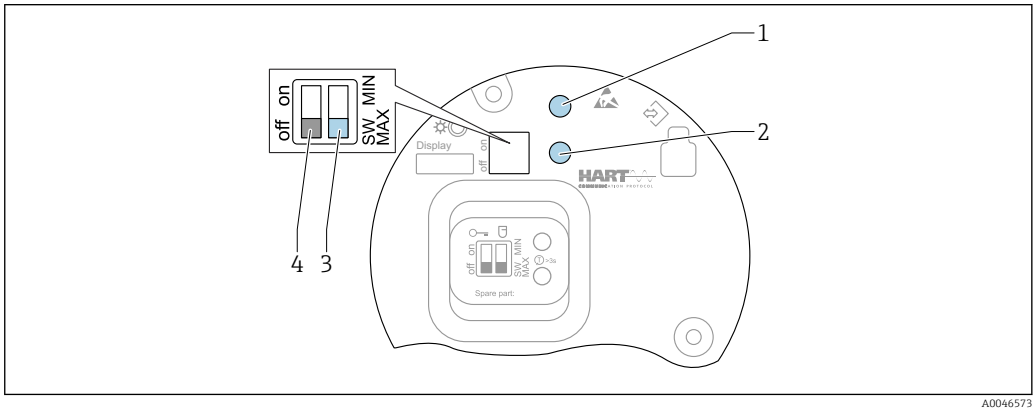

27 Operating keys and DIP switch on FEL60H electronic insert

1 Operating key for reset password (for Bluetooth login and Maintenance user role)
1+2 Operating keys for device reset (as-delivered state)
2 Operating key for Proof test (> 3 s)
3 DIP switch for safety function, software-defined (SW, default=MAX) or set permanently to MIN
4 DIP switch for locking and unlocking the device

Setting the MIN or MAX safety mode via the DIP switch

- When the switch is set to "SW", the MIN or MAX setting is defined by the software, with MAX being the default value.
- In the "MIN" switch position, the setting is permanently MIN irrespective of the software.

10.6.2 Resetting the password or device via operating keys

Reset password

1. Briefly press operating key I 3 times within 4 seconds.
   ↳ The (green) LED flashes twice repeatedly at short intervals.
2. Press operating key I again to confirm and release the key.
   ↳ The password has been reset.
   The LED stops flashing.

ℹ If the time until confirmation is longer than 15 s, the device quits the "Reset Password" state and the LED stops flashing. The password is not reset. Repeat procedure if necessary.

Resetting the device (order configuration)

- Press both operating keys simultaneously for at least 12 s.
  ↳ The device has been reset (as-delivered state).

10.6.3 Commissioning with "Commissioning" wizard

In FieldCare, DeviceCare [1], SmartBlue and on the display, the **Commissioning** wizard is available to guide the user through the initial commissioning steps.

1. Connect the device to the operating tool.
2. Open the device in the operating tool.
   ↳ The dashboard (homepage) of the device is displayed:
3. Open the wizard: **Guidance** menu → **Commissioning** wizard
4. Enter the appropriate value in each parameter or select the appropriate option. These values are written directly to the device.
5. Click "Next" to go to the next page.
6. Once all the pages have been completed, click "End": the **Commissioning** wizard is closed.

If the **Commissioning** wizard is cancelled before all the necessary parameters have been configured, the device may be in an undefined state. In such situations, it is advisable to reset the device to the factory default settings.

10.6.4 Storing the oscillation frequencies

Two frequencies (uncovered/covered) can be stored in the device so that the current oscillation frequency can be compared later on to the condition at the time of commissioning.

The frequencies can only be stored in the respective fork state. For example, if the fork is covered it is only possible to save the frequency when the fork is covered (**Stored covered frequency** parameter).

The value is saved via the **Commissioning** wizard or in the operating menu:

Navigation: Application → Sensor → Stored frequency

10.7 Simulation

The following options can be simulated in the **Simulation** submenu:
- Fork state (uncovered/covered)
- Sensor frequency
- Current output
- Diagnostic event simulation

Navigation: Diagnostics → Simulation → Simulation

1) DeviceCare is available for download at www.software-products.endress.com. You must register in the Endress+Hauser software portal to download the product.

10.8 Protecting settings from unauthorized access

10.8.1 Locking or unlocking the hardware

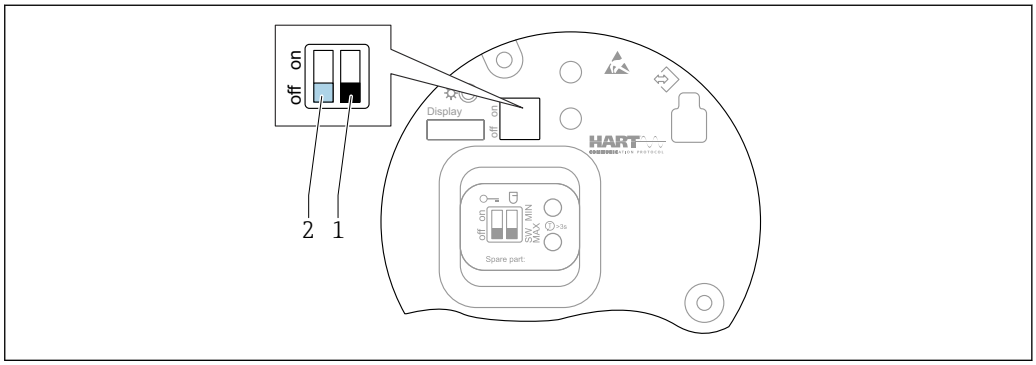

28 *Functions of DIP switches on the FEL60H electronic insert*

1 *DIP switch for safety function, software-defined (SW, default=MAX) or set permanently to MIN*
2 *DIP switch for locking and unlocking the device (hardware)*

DIP switch (2) on the electronic insert is used to lock or unlock operation.

- If operation is locked via the DIP switch, you can only unlock operation again via the DIP switch.
- If operation is locked via the operating menu, you can only unlock operation again via the operating menu.
- If operation is locked via the DIP switch, the lock icon appears on the local display.

10.8.2 Locking or unlocking the display operation

Lock or unlock display operation:

1. Press the E key for at least 2 s.
   ↳ A dialog box appears.
2. Lock or unlock display operation.

Display operation locks automatically (except in the SIL wizard):
- After 1 minute on the main page if no key has been pressed
- After 10 minutes within the operating menu if no key has been pressed

10.8.3 Parameter configuration - locking or enabling

If operation is locked by means of the DIP switch, you can only unlock operation again by means of the DIP switch.

Software - via password in FieldCare, DeviceCare, SmartBlue app

As-delivered state:
The user role is set to **Maintenance** when the device is delivered to the customer.

Parameter configuration (Maintenance user role):
The device can be fully configured with the **Maintenance** user role.

Locking access:
After configuring with the **Maintenance** user role, access can be locked by assigning a password. The lock changes the **Maintenance** user role to the **Operator** user role.

Parameter configuration (Operator user role):
Parameter configuration of the device is locked in the **Operator** user role.

Unlocking access:
Access to parameter configuration can be unlocked by entering the password. The user role changes back to **Maintenance**.

Navigation for assigning the password and changing the user role: System → User management

Delete password:
If necessary, the password can be deleted in the **User management**.

Navigation: System → User management → Delete password → Start

11 Operation

11.1 Reading off the device locking status

Displaying active write protection in the **Locking status** parameter
- Local display :
  The symbol appears on the main page
- Operating tool (FieldCare/DeviceCare) :
  Navigation: System → Device management → Locking status

11.2 Reading off measured values

All the measured values can be read off using the **Measured values** submenu.

Navigation: **Application** menu → **Measured values** submenu

11.3 Adapting the device to process conditions

The following menus are available for this purpose:
- Basic settings in the **Guidance** menu
- Advanced settings in:
  - **Diagnostics** menu
  - **Application** menu
  - **System** menu

For details, see the "Description of device parameters" documentation.

11.3.1 Level limit detection

Operating as a level switch in the 8/16 mA mode.

Output of point level:
- 8 mA (demand mode: MIN uncovered or MAX covered)
- 16 mA (OK status: MIN uncovered or MAX covered)

1. Navigation: Application → Sensor → Sensor configuration
2. Set the Mode of operation to Level limit detection.
3. Set the Safety function to MIN (dry-run protection) or MAX (overfill protection), according to the application.
4. Set the **Density setting** parameter according to the application (> 0.4 g/cm³, > 0.5 g/cm³, > 0.7 g/cm³).
5. Optionally: Set the **Switching delay uncovered to covered** parameter and the **Switching delay covered to uncovered** parameter.

11.3.2 Sensor frequency

Continuous operation in the 4 to 20 mA mode. Loop current proportional to oscillation frequency of fork.

1. Navigation: Application → Sensor → Sensor configuration
2. Set the **Mode of operation** parameter to the **Sensor frequency** option.
3. Set the **Density setting** parameter according to the application (> 0.4 g/cm³, > 0.5 g/cm³, > 0.7 g/cm³).
   ↳ This is used to ensure that the **Fork state** parameter (covered/uncovered) continues to be displayed correctly.
4. Navigation: Guidance → Commissioning
5. Set the **Lower range value output** parameter to the frequency that should correspond to a 4 mA output current.
6. Set the **Upper range value output** parameter to the frequency that should correspond to a 20 mA output current.

11.4 Heartbeat Technology (optional)

Heartbeat Technology comprises 3 modules. These three modules combined check, evaluate and monitor device functionality and process conditions.

11.4.1 "Heartbeat Verification" wizard

The wizard guides the user through the entire process for creating the verification report. It can be used via the following operating tools:
- SmartBlue app
- DTM
- Display [2)]

Information contained in the verification report:
- Operating hours counter
- Temperature and frequency indicator
- Oscillation frequency in delivery state (in air) as reference value
- Oscillation frequency:
  - Increased oscillation frequency → indication of corrosion
  - Reduced oscillation frequency → indication of buildup or covered sensor
    Deviations can be affected by the process temperature or process pressure
- Frequency history:
  Storage of last 16 sensor frequencies at the time of verification

Perform verification via one of the following interfaces:
- System integration interface of a higher-level system
- Service interface (CDI = Endress+Hauser Common Data Interface)
- Local display (optional)
- Bluetooth® wireless technology (optional)

Navigation:Guidance → Heartbeat Technology → Heartbeat Verification

11.4.2 Data exchange performed by the user (asset management system)

The **Heartbeat Technology** submenu is only available during operation via FieldCare, DeviceCare or the SmartBlue app. It contains the wizards that are available with the application packages Heartbeat Verification + Heartbeat Monitoring.

2) The wizard can be started on the display but only shows the result **Passed** option or **Failed** option.

Heartbeat Verification
- Start of verification
- Upload, archive and document the verification results including detailed results

Heartbeat Monitoring
- Configuration of the monitoring function: specify which monitoring parameters are output continuously via the system integration interface.
- The user can read the monitoring measured variables in the operating menu.

Documentation on the application package Heartbeat Verification, Endress+Hauser website: www.endress.com → Downloads.

11.5 Proof testing for SIL/WHG devices (optional) [3)]

The "Proof test" module contains the **Proof test** wizard, which must be performed at appropriate intervals in the following applications: SIL (IEC61508), WHG (German Water Resources Act (Gesetz zur Ordnung des Wasserhaushalts)):
- The wizard can be used via the operating tools (SmartBlue app, DTM).
- The wizard guides the user through the entire process for creating the verification report.
- The verification report can be saved as a PDF file.

12 Diagnostics and troubleshooting

12.1 General troubleshooting

12.1.1 General errors

Device not responding
- Possible cause: Supply voltage does not match the specification on the nameplate
  Remedial action: Apply the correct voltage
- Possible cause: The polarity of the supply voltage is wrong
  Remedial action: Correct the polarity
- Possible cause: The cables do not contact the terminals properly
  Remedial action: Check the electrical contact between cables and correct if necessary
- Possible cause: Load resistance too high
  Remedial action: Increase the supply voltage to reach the minimum terminal voltage

No values visible on the display
- Possible cause: Graphic display is set too bright or too dark
  Remedial action: Increase or decrease the contrast with the **Contrast display** parameter
  Navigation path: System → Display → Contrast display
- Possible cause: The plug of the display cable is not connected correctly
  Remedial action: Connect the plug correctly
- Possible cause: Display is defective
  Remedial action: Replace the display

No background lighting on the graphic display
Possible cause: There is insufficient power available
Remedial action: Increase the supply voltage

3) Available only for devices with SIL or WHG approval

"Communication error" is indicated on the display when the device is started or the display is connected

- Possible cause: Electromagnetic interference influence
  Remedial action: Check grounding of the device
- Possible cause: Defective cable connection or display plug
  Remedial action: Replace the display

HART communication not working

- Possible cause: Communication resistor missing or incorrectly installed
  Remedial action: Install the communication resistor (250 Ω) correctly
- Possible cause: The HART modem is not properly connected
  Remedial action: Connect the HART modem correctly

Communication via CDI interface not working

Possible cause: Wrong setting of the COM port on the computer
Remedial action: Check the setting of the COM port on the computer and correct it if necessary

Device measures incorrectly

Possible cause: Parametrization error
Remedial action: Check and correct the parameter configuration

No communication with device via SmartBlue

- Possible cause: No Bluetooth connection available
  Remedial action: Enable the Bluetooth function on the smartphone, tablet and device
- Possible cause: The device is already connected with another smartphone/tablet
  Remedial action: Disconnect the device from the other smartphone/tablet
- Ambient conditions (e.g. walls/tanks) disturbing the Bluetooth connection
  Remedial action: Establish direct line-of-sight connection
- Display does not have Bluetooth

Login via SmartBlue not possible

- Possible cause: Device is being put into operation for the first time
  Remedial action: Enter the user name ("admin") and the password (device serial number)
- Possible cause: There is insufficient power available.
  Remedial action: Increase the supply voltage.

Device cannot be operated via SmartBlue

- Possible cause: Incorrect password entered
  Remedial action: Enter the correct password
- Possible cause: Forgotten password
  Remedial action: Use the operating key on the electronic insert to reset the password or contact Endress+Hauser Service (www.addresses.endress.com)
- Possible cause: Operator user role has no authorization
  Remedial action: Change to the Maintenance user role

12.1.2 Fault - SmartBlue operation with Bluetooth® wireless technology

No communication with device via SmartBlue

- Possible cause: Bluetooth® connection not available
  Remedial action: Enable the Bluetooth® function on smartphone, tablet and device
- Possible cause: The device is already connected with another smartphone/tablet
  Remedial action: Disconnect the device from the other smartphone/tablet
- Ambient conditions (e.g. walls/tanks) disturbing the Bluetooth® connection
  Remedial action: Establish direct line-of-sight connection
- Display does not have Bluetooth®

Login via SmartBlue not possible

- Possible cause: Device is being put into operation for the first time
  Remedial action: Enter the user name ("admin") and the password (device serial number)
- Possible cause: There is insufficient power available.
  Remedial action: Increase the supply voltage.

Device cannot be operated via SmartBlue

- Possible cause: Incorrect password entered
  Remedial action: Enter the correct password
- Possible cause: Forgotten password
  Remedial action: Use the operating key on the electronic insert to reset the password or contact Endress+Hauser Service (www.addresses.endress.com)
- Possible cause: Operator user role has no authorization
  Remedial action: Change to the Maintenance user role

Device is not visible in the live list

- Possible cause: Bluetooth® connection not available
  Remedial action: Enable Bluetooth® in the field device via display or software tool and/or in the smartphone/tablet.
- Possible cause: Bluetooth® signal outside range
  Remedial action: Reduce distance between field device and smartphone/tablet
  The connection has a range of up to 25 m (82 ft).
  Operating radius with intervisibility 10 m (33 ft)
- Possible cause: Geopositioning is not enabled on Android devices or is not permitted for the SmartBlue app.
  Remedial action: Activate/allow geopositioning service on Android device for the SmartBlue app.

Device appears in the live list but a connection cannot be established

- Possible cause: The device is already connected with another smartphone/tablet via Bluetooth®.
  Only one point-to-point connection is permitted
  Remedial action: Disconnect the smartphone/tablet from the device
- Possible cause: Incorrect user name and password
  Remedial action: The standard user name is "admin" and the password is the device serial number indicated on the device nameplate (only if the password was not changed by the user beforehand)
  If you have forgotten the password, use the operating key on the electronic insert to reset the password or
  contact Endress+Hauser Service (www.addresses.endress.com)

Connection via SmartBlue not possible

Possible cause: Incorrect password entered
Remedial action: Enter the correct password, paying attention to lower/upper case

Connection via SmartBlue not possible

Possible cause: Forgotten password
Remedial action: Use the operating key on the electronic insert to reset the password or contact Endress+Hauser Service (www.addresses.endress.com)

12.1.3 Additional tests

If no clear cause of the error can be identified or the source of the problem can be both the device and the application, the following additional tests can be performed:

1. Reset the device to the factory setting.
2. Check the digital point level or sensor frequency (display, HART, ..).
3. Check that the device concerned is functioning correctly. If the digital value does not correspond to the anticipated point level or sensor frequency, replace the device.
4. Switch on simulation and check the current output. Replace the main electronics if the current output does not correspond to the simulated value.

12.1.4 Behavior of current output in the event of a fault

The behavior of the current output in the event of faults is defined by the **Failure behavior current output** parameter.

Parameter overview with brief description

Parameter	Description	Selection / User entry
Failure behavior current output	Defines which current the output assumes in the case of an error. Min: < 3.6 mA Max: >21.5 mA Note: The hardware DIP Switch for alarm current (if available) has priority over software setting.	▪ Min. ▪ Max.
Failure current	Enter current output value in alarm condition.	21.5 to 23 mA

12.2 Diagnostic information on onsite display

12.2.1 Diagnostic message

Measured value display and diagnostic message in the event of a failure

Faults detected by the device's self-monitoring system are displayed as a diagnostic message in alternating sequence with the measured value display.

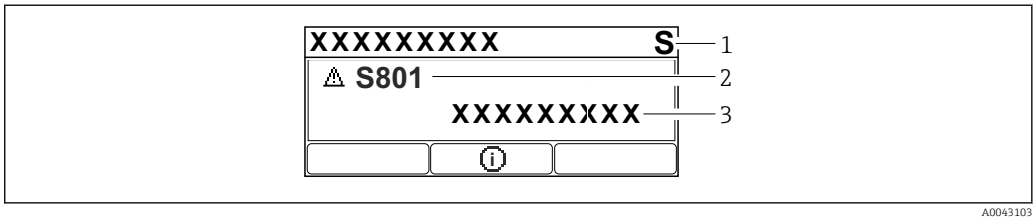

1 Status signal
2 Status symbol with diagnostic event
3 Event text

Status signal

F
Failure (F)
A device error has occurred. The measured value is no longer valid.

C
Function check (C)
The device is in the service mode (e.g. during a simulation).

S
Out of specification (S)
Device operation:
- Outside of the technical specifications (e.g. during startup or a cleaning)
- Outside of the configuration performed by the user (e.g. sensor frequency outside the configured span)

M
Maintenance required (M)
Maintenance required. The measured value is still valid.

Diagnostic event and event text

The fault can be identified by means of the diagnostic event. The event text helps you by providing information about the fault. In addition, the associated status symbol is displayed in front of the diagnostic event.

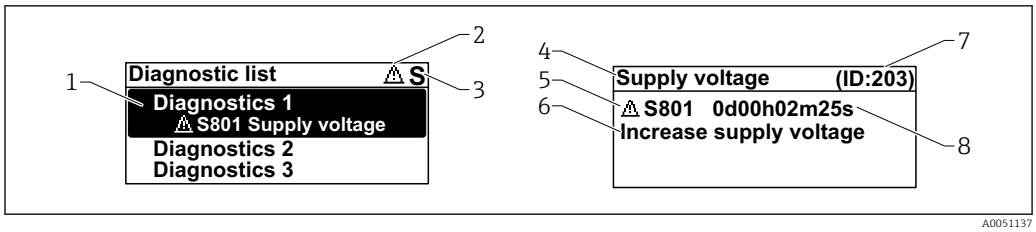

1 *Diagnostic message*
2 *Symbol for event level*
3 *Status signal*
4 *Short text*
5 *Symbol for event level, status signal, diagnostic number*
6 *Remedial measure*
7 *Service ID*
8 *Operating time of occurrence*

Symbol for event level

⊗ "Alarm" status
Measurement is interrupted. The signal outputs adopt the defined alarm state. A diagnostic message is generated.

⚠ "Warning" status
The device continues to measure. A diagnostic message is generated.

"Active diagnostics" parameter

⊞ *key*

Opens the message about the remedial actions.

⊟ *key*

Acknowledge warnings.

Ⓔ *key*

Back to operating menu.

12.3 Diagnostic event in the operating tool

If there is a diagnostic event in the device, the status signal appears on the top left in the status section of the operating tool together with the associated icon for event behavior according to NAMUR NE 107:

- Failure (F)
- Function check (C)
- Out of specification (S)
- Maintenance required (M)

Click the status signal to see the detailed status signal.

The diagnostic events and remedial measures can be printed in the **Diagnostic list** submenu.

12.4 Adapting the diagnostic information

The event level can be configured:

Navigation: Diagnostics → Diagnostic settings → Configuration

12.5 Queued diagnostic messages

The display alternates between the queued diagnostic messages and the measured value.

Queued diagnostic messages can also be displayed in the **Active diagnostics** parameter.

Navigation: Diagnostics → Active diagnostics

12.6 Diagnostic list

All the diagnostic messages that are currently queued can be displayed in the **Diagnostic list** submenu.

Navigation: Diagnostics → Diagnostic list

Diagnostic number	Short text	Remedy instructions	Status signal [from the factory]	Diagnostic behavior [from the factory]
Diagnostic of sensor				
004	Sensor defective	1. Restart device 2. Replace electronics 3. Replace device	F	Alarm
007	Sensor defective	1. Check fork 2. Replace device	F	Alarm
042	Sensor corroded	1. Check fork 2. Replace device	F	Alarm
049	Sensor corroded	1. Check fork 2. Replace device	M	Warning [1)]
061	Sensor electronics faulty	Replace electronics	F	Alarm
062	Sensor connection faulty	1. Check Main to sensor connection 2. Replace electronics	F	Alarm
081	Sensor initialization faulty	1. Restart device 2. Contact service	F	Alarm
Diagnostic of electronic				
201	Electronics faulty	1. Restart device 2. Replace electronics	F	Alarm
203	HART Device Malfunction	Check device specific diagnosis.	S	Warning
204	HART Electronic Defect	Check device specific diagnosis.	F	Alarm
242	Firmware incompatible	1. Check software 2. Flash or change main electronic module	F	Alarm
252	Module incompatible	1. Check if correct electronic module is plugged 2. Replace electronic module	F	Alarm
263	Electronic incompatible	Check electronic module type	F	Alarm
270	Main electronics defective	Replace main electronics or device.	F	Alarm
272	Main electronics faulty	1. Restart device 2. Contact service	F	Alarm
273	Main electronics defective	Replace main electronics or device.	F	Alarm
282	Data storage inconsistent	Restart device	F	Alarm

Diagnostic number	Short text	Remedy instructions	Status signal [from the factory]	Diagnostic behavior [from the factory]
283	Memory content inconsistent	1. Restart device 2. Contact service	F	Alarm
287	Memory content inconsistent	1. Restart device 2. Contact service	M	Warning
388	Electronics and HistoROM defective	1. Restart device 2. Replace electronics and HistoROM 3. Contact service	F	Alarm
Diagnostic of configuration				
410	Data transfer failed	1. Retry data transfer 2. Check connection	F	Alarm
412	Processing download	Download active, please wait	C	Warning
420	HART Device Configuration Locked	Check device locking configuration.	S	Warning
421	HART Loop Current fixed	Check Multi-drop mode or current simulation.	S	Warning
431	Trim required	Carry out trim	C	Warning
437	Configuration incompatible	1. Update firmware 2. Execute factory reset	F	Alarm
438	Dataset different	1. Check dataset file 2. Check device parameterization 3. Download new device parameterization	M	Warning
441	Current output 1 saturated	1. Check process 2. Check current output settings	S	Warning
484	Failure mode simulation active	Deactivate simulation	C	Alarm
485	Process variable simulation active	Deactivate simulation	C	Warning
491	Current output simulation active	Deactivate simulation	C	Warning
495	Diagnostic event simulation active	Deactivate simulation	S	Warning
538	Configuration Sensor Unit invalid	1. Check sensor configuration 2. Check device configuration	M	Warning
Diagnostic of process				
801	Supply voltage too low	Increase supply voltage	F	Alarm
802	Supply voltage too high	Decrease supply voltage	S	Warning
805	Loop current faulty	1. Check wiring 2. Replace electronics or device	F	Alarm
806	Loop diagnostics	1. Check supply voltage 2. Check wiring and terminals	M	Warning [1)]
807	No Baseline due to insuf. volt. at 20 mA	Increase supply voltage	M	Warning
825	Electronics temperature	1. Check ambient temperature 2. Check process temperature	S	Warning [1)]
826	Sensor temperature out of range	1. Check ambient temperature 2. Check process temperature	S	Warning [1)]
842	Process limit	1. Check process density 2. Check fork	F	Alarm

Diagnostic number	Short text	Remedy instructions	Status signal [from the factory]	Diagnostic behavior [from the factory]
846	HART Non-Primary Variable Out of Limit	Check device specific diagnosis.	S	Warning
847	HART Primary Variable Out of Limit	Check device specific diagnosis.	S	Warning
848	HART Device Variable Alert	Check device specific diagnosis.	S	Warning
900	Process alert frequency too low	Check process conditions	M	Warning [1]
901	Process alert frequency too high	Check process conditions	M	Warning [1]

1) Diagnostic behavior can be changed.

12.7 Event logbook

12.7.1 Event history

The **Event list** submenu provides a chronological overview of the event messages that have occurred [4].

Navigation: Diagnostics → Event logbook

A maximum of 100 event messages can be displayed in chronological order.

The event history includes entries for:
- Diagnostic events
- Information events

In addition to the operating time when the event occurred, each event is also assigned a symbol that indicates whether the event has occurred or is finished:
- Diagnostic event
  - ⊖: Occurrence of the event
  - ⊖: End of the event
- Information event
  ⊖: Occurrence of the event

12.7.2 Filtering the event logbook

Filters can be used to determine which category of event messages is displayed in the **Event list** submenu.

Navigation: Diagnostics → Event logbook

Filter categories
- All
- Failure (F)
- Function check (C)
- Out of specification (S)
- Maintenance required (M)
- Information

4) If operating via FieldCare, the event list can be displayed with the "Event List/HistoROM" function in FieldCare.

12.7.3 Overview of information events

Info number	Info name
I1000	--------(Device ok)
I1089	Power on
I1090	Configuration reset
I1091	Configuration changed
I11074	Device verification active
I1110	Write protection switch changed
I11104	Loop diagnostics
I11284	DIP MIN setting to HW active
I11285	DIP SW setting active
I1151	History reset
I1154	Reset terminal voltage min/max
I1155	Reset electronics temperature
I1157	Memory error event list
I1256	Display: access status changed
I1264	Safety sequence aborted
I1335	Firmware changed
I1397	Fieldbus: access status changed
I1398	CDI: access status changed
I1440	Main electronic module changed
I1444	Device verification passed
I1445	Device verification failed
I1461	Sensor verification failed
I1512	Download started
I1513	Download finished
I1514	Upload started
I1515	Upload finished
I1551	Assignment error fixed
I1552	Failed: Main electronic verification
I1554	Safety sequence started
I1555	Safety sequence confirmed
I1556	Safety mode off
I1956	Reset

12.8 Device reset

12.8.1 Resetting the device via the operating software or display

Navigation: System → Device management → Reset device

For details see the "Description of device parameters" documentation.

12.8.2 Resetting the device via operating keys on the electronic insert

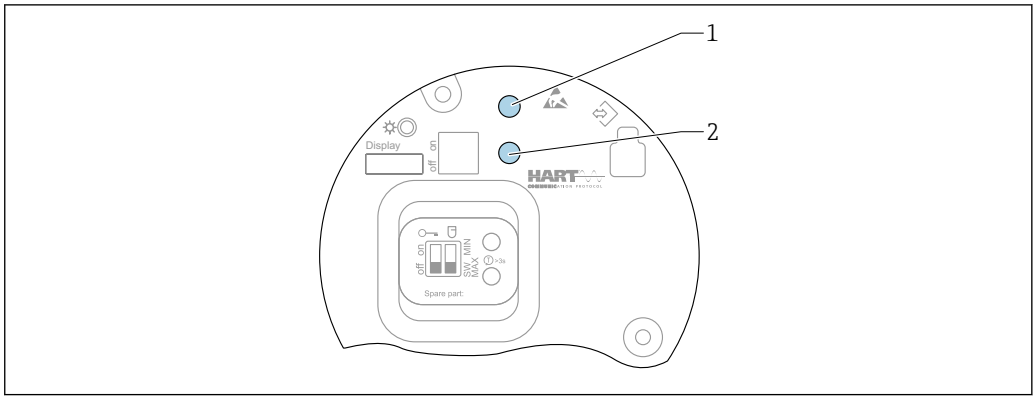

29 Operating keys on the FEL60H electronic insert

1+2 Press simultaneously: operating keys for resetting the device (as-delivered state)

Resetting the device (order configuration)

- Press both operating keys simultaneously for at least 12 s.
  - The device has been reset (as-delivered state).

12.9 Device information

All the device information is contained in the **Information** submenu.

Navigation: System → Information

For details see the "Description of device parameters" documentation.

13 Maintenance

13.1 Maintenance tasks

No specific maintenance work is required.

13.1.1 Cleaning

Cleaning of surfaces not in contact with the medium

- Recommendation: Use a lint-free cloth that is either dry or slightly dampened using water.
- Do not use any sharp objects or aggressive cleaning agents that corrode the surfaces (e.g. displays, housing) and seals.
- Do not use high-pressure steam.
- Observe the degree of protection of the device.

The cleaning agent used must be compatible with the materials of the device configuration. Do not use cleaning agents with concentrated mineral acids, bases or organic solvents.

Cleaning of surfaces in contact with the medium

Note the following for cleaning and sterilization in place (CIP/SIP):
- Use only cleaning agents to which the materials in contact with the medium are sufficiently resistant.
- Observe the permitted maximum medium temperature.

Cleaning the vibrating fork

It is not permitted to use the device with abrasive media. Material abrasion on the vibrating fork can result in the device malfunctioning.

- Clean the vibrating fork as necessary
- Cleaning is also possible in the installed state, e.g. CIP Cleaning in Place and SIP Sterilization in Place

14 Repair

14.1 General notes

14.1.1 Repair concept

Endress+Hauser repair concept
- The devices have a modular design
- Customers can carry out repairs

For more information on service and spare parts, please contact your Endress+Hauser sales representative.

14.1.2 Repairs to Ex-approved devices

WARNING

Incorrect repair can compromise electrical safety!
Explosion hazard!
- ▶ Only specialist personnel or the manufacturer's service team may carry out repairs on Ex-certified devices in accordance with national regulations.
- ▶ Relevant standards and national regulations on hazardous areas, safety instructions and certificates must be observed.
- ▶ Only use original spare parts from the manufacturer.
- ▶ Please note the device designation on the nameplate. Only identical parts may be used as replacements.
- ▶ Carry out repairs according to the instructions.
- ▶ Only the manufacturer's service team is permitted to modify a certified device and convert it to another certified version.

14.2 Spare parts

Product spare parts that are currently available can be found online at:
www.endress.com/onlinetools

14.3 Replacement

CAUTION

Data upload/download is not permitted if the device is used for safety-related applications.

- After an entire device or an electronics module has been replaced, the parameters can be downloaded to the device again via the communication interface. For this, the data must have been uploaded to the PC beforehand using the "FieldCare/DeviceCare" software.

14.3.1 HistoROM

It is not necessary to perform a new device calibration after replacing the display or transmitter electronics.

The spare part is supplied without HistoROM.

After removing the transmitter electronics, remove HistoRom and insert it into the new spare part.

14.4 Return

The requirements for safe device return can vary depending on the device type and national legislation.

1. Refer to the web page for information: https://www.endress.com
2. If returning the device, pack the device in such a way that it is reliably protected against impact and external influences. The original packaging offers the best protection.

14.5 Disposal

If required by the Directive 2012/19/EU on waste electrical and electronic equipment (WEEE), the product is marked with the depicted symbol in order to minimize the disposal of WEEE as unsorted municipal waste. Do not dispose of products bearing this marking as unsorted municipal waste. Instead, return them to the manufacturer for disposal under the applicable conditions.

15 Accessories

The accessories currently available for the product can be selected at www.endress.com:

1. Select the product using the filters and search field.
2. Open the product page.
3. Select **Spare parts & Accessories**.

The accessories can be partially ordered via the "Accessory enclosed" product structure.

15.1 Device Viewer

All the spare parts for the device, along with the order code, are listed in the *Device Viewer* (www.endress.com/deviceviewer).

15.2 Weather protection cover: 316L, XW112

The weather protection cover can be ordered together with the device via the "Accessory enclosed" product structure.

It is used to protect against direct sunlight, precipitation and ice.

Weather protection cover 316L is suitable for the dual compartment housing made of aluminum or 316L. The delivery includes the holder for direct mounting on the housing.

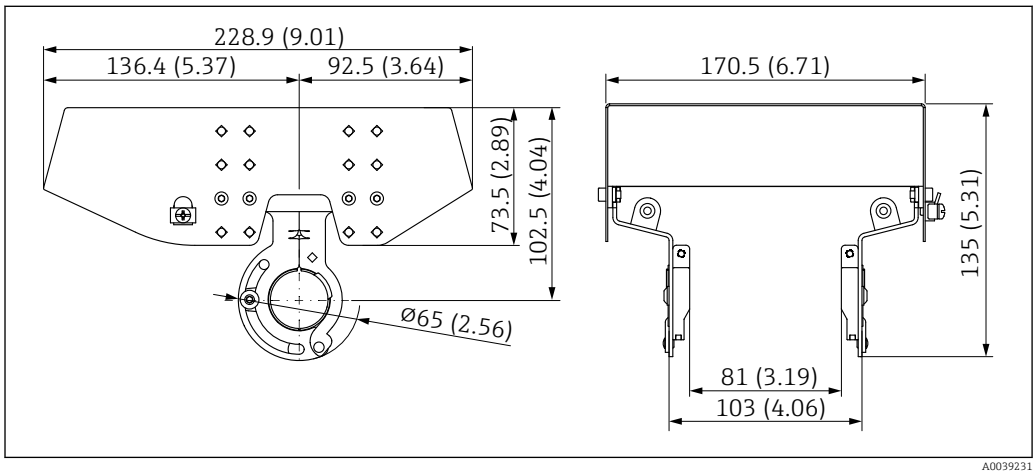

30 *Dimensions of weather protection cover, 316 L, XW112. Unit of measurement mm (in)*

Material
- Weather protection cover: 316L
- Clamping screw: A4
- Bracket: 316L

Accessory order code:
71438303

Special Documentation SD02424F

15.3 Weather protection cover, plastic, XW111

The weather protection cover can be ordered together with the device via the "Accessory enclosed" product structure.

It is used to protect against direct sunlight, precipitation and ice.

The plastic weather protection cover is suitable for the single compartment housing made of aluminum. The delivery includes the holder for direct mounting on the housing.

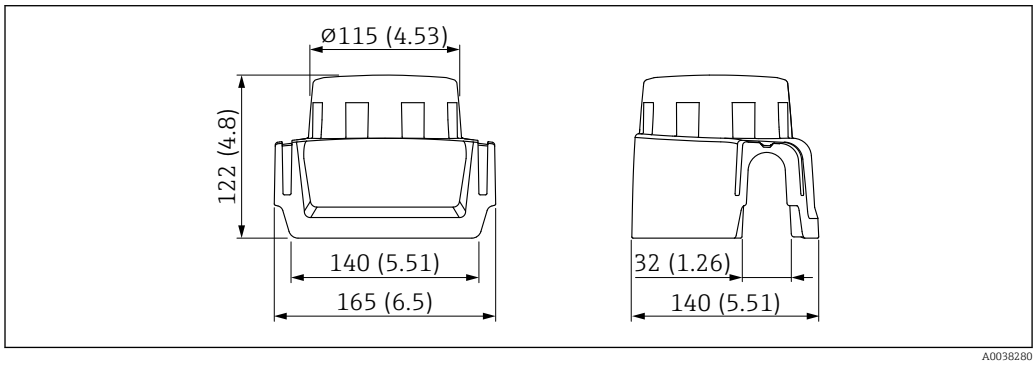

31 *Dimensions of weather protection cover, plastic, XW111. Unit of measurement mm (in)*

Material
Plastic

Accessory order code:
71438291

Special Documentation SD02423F

15.4 M12 socket

The M12 sockets listed are suitable for use in the temperature range −25 to 70 °C (−13 to 158 °F).

M12 socket IP69
- Terminated at one end
- Angled
- 5 m (16 ft) PVC cable (orange)
- Slotted nut 316L (1.4435)
- Body: PVC
- Order number: 52024216

M12 socket IP67
- Angled
- 5 m (16 ft) PVC cable (gray)
- Slotted nut Cu Sn/Ni
- Body: PUR
- Order number: 52010285

15.5 Sliding sleeves for unpressurized operation

Not suitable for devices with PFA (conductive) coating.

Not suitable for use in explosive atmospheres.

Switch point, infinitely adjustable.

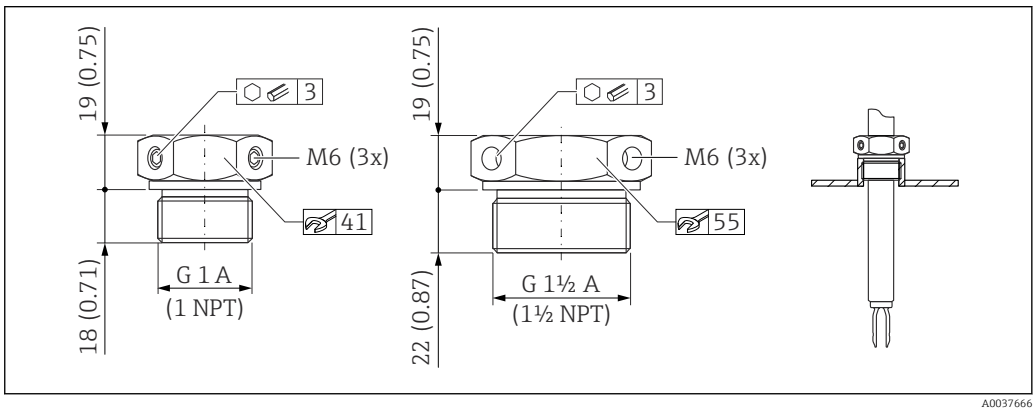

32 *Sliding sleeves for unpressurized operation p_e = 0 bar (0 psi). Unit of measurement mm (in)*

G 1, DIN ISO 228/I
- Material: 1.4435 (AISI 316L)
- Weight: 0.21 kg (0.46 lb)
- Order number: 52003978
- Order number: 52011888, approval: with inspection certificate EN 10204 - 3.1 material

NPT 1, ASME B 1.20.1
- Material: 1.4435 (AISI 316L)
- Weight: 0.21 kg (0.46 lb)
- Order number: 52003979
- Order number: 52011889, approval: with inspection certificate EN 10204 - 3.1 material

G 1½, DIN ISO 228/I
- Material: 1.4435 (AISI 316L)
- Weight: 0.54 kg (1.19 lb)
- Order number: 52003980
- Order number: 52011890, approval: with inspection certificate EN 10204 - 3.1 material

NPT 1½, ASME B 1.20.1
- Material: 1.4435 (AISI 316L)
- Weight: 0.54 kg (1.19 lb)
- Order number: 52003981
- Order number: 52011891, approval: with inspection certificate EN 10204 - 3.1 material

More detailed information and documentation are available:
- Product Configurator on the Endress+Hauser website www.endress.com
- Endress+Hauser Sales Organizationwww.addresses.endress.com

15.6 High pressure sliding sleeves

Suitable for use in explosive atmospheres.

Not suitable for devices with PFA (conductive) coating.

- Switch point, infinitely adjustable
- Seal package made of graphite
- Graphite seal available as spare part 71078875
- For G 1, G 1½: seal is included in the delivery

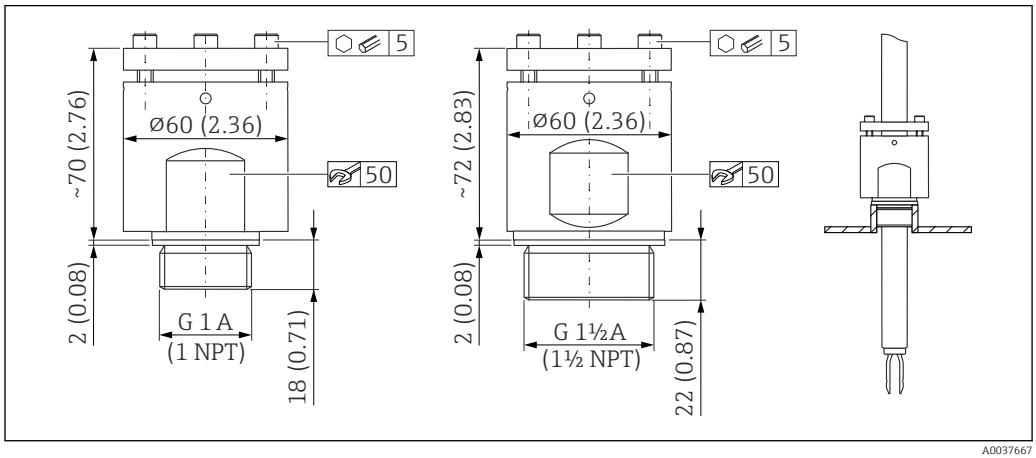

33 *High pressure sliding sleeves. Unit of measurement mm (in)*

G 1, DIN ISO 228/I
- Material: 1.4435 (AISI 316L)
- Weight: 1.13 kg (2.49 lb)
- Order number: 52003663
- Order number: 52011880, approval: with inspection certificate EN 10204 - 3.1 material

G 1, DIN ISO 228/I
- Material: AlloyC22
- Weight: 1.13 kg (2.49 lb)
- Approval: with inspection certificate EN 10204 - 3.1 material
- Order number: 71118691

NPT 1, ASME B 1.20.1
- Material: 1.4435 (AISI 316L)
- Weight: 1.13 kg (2.49 lb)
- Order number: 52003667
- Order number: 52011881, approval: with inspection certificate EN 10204 - 3.1 material

NPT 1, ASME B 1.20.1
- Material: AlloyC22
- Weight: 1.13 kg (2.49 lb)
- Approval: with inspection certificate EN 10204 - 3.1 material
- Order number: 71118694

G 1½, DIN ISO 228/1
- Material: 1.4435 (AISI 316L)
- Weight: 1.32 kg (2.91 lb)
- Order number: 52003665
- Order number: 52011882, approval: with inspection certificate EN 10204 - 3.1 material

G 1½, DIN ISO 228/1
- Material: AlloyC22
- Weight: 1.32 kg (2.91 lb)
- Approval: with inspection certificate EN 10204 - 3.1 material

NPT 1½, ASME B 1.20.1
- Material: 1.4435 (AISI 316L)
- Weight: 1.32 kg (2.91 lb)
- Order number: 52003669
- Order number: 52011883, approval: with inspection certificate EN 10204 - 3.1 material

NPT 1½, ASME B 1.20.1
- Material: AlloyC22
- Weight: 1.32 kg (2.91 lb)
- Approval: with inspection certificate EN 10204 - 3.1 material
- Order number: 71118695

More detailed information and documentation are available:
- Product Configurator on the Endress+Hauser website www.endress.com
- Endress+Hauser Sales Organizationwww.addresses.endress.com

15.7 Field Xpert SMT70

Universal, high-performance tablet PC for device configuration in Ex Zone 2 and non-Ex areas

Technical Information TI01342S

15.8 DeviceCare SFE100

Configuration tool for HART, PROFIBUS and FOUNDATION Fieldbus field devices

Technical Information TI01134S

15.9 FieldCare SFE500

FDT-based plant asset management tool

It can configure all smart field units in your system and helps you manage them. By using the status information, it is also a simple but effective way of checking their status and condition.

Technical Information TI00028S

16 Technical data

16.1 Input

16.1.1 Measured variable

The point level signal is triggered according to the operating mode (minimum or maximum detection) when the level exceeds or falls below the relevant point level.

16.1.2 Measuring range

Depends on the installation location and the pipe extension ordered

Standard pipe extension up to 3 m (9.8 ft) and up to 6 m (20 ft) on request.

16.2 Output

16.2.1 Output signal

SIO

8/16 mA (SIO) with superimposed digital communication protocol HART, 2-wire

Continuous operation

4 to 20 mA proportional to the oscillation frequency with superimposed digital communication protocol HART, 2-wire

For continuous current output, one of the following modes of operation can be selected:
- 4.0 to 20.5 mA
- NAMUR NE 43: 3.8 to 20.5 mA (factory setting)
- US mode: 3.9 to 20.8 mA

16.2.2 Signal on alarm

Signal on alarm in accordance with NAMUR recommendation NE 43.

4 to 20 mA HART:
- Maximum alarm: can be set from 21.5 to 23 mA
- Minimum alarm: < 3.6 mA (factory setting)

16.2.3 4 to 20 mA passive, HART

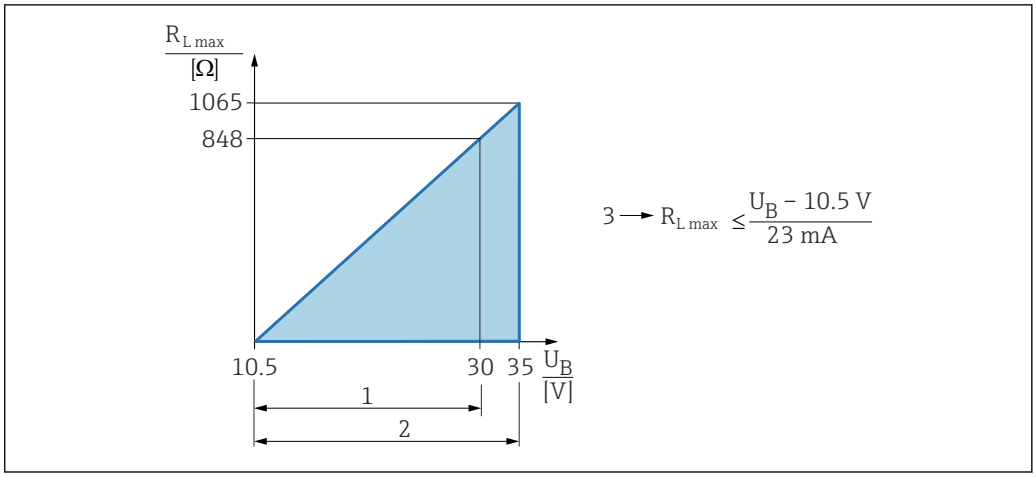

1 *Power supply DC 10.5 to 30 V Ex i*
2 *Power supply DC 10.5 to 35 V, for other types of protection and non-certified device versions*
3 *R_{Lmax} maximum load resistance*
U_B Supply voltage

Operation via handheld terminal or PC with operating program: take minimum communication resistance of 250 Ω into consideration.

16.2.4 Damping

- Affects all outputs, including the output signal and the display
- Only available in continuous operation 4 to 20 mA
- No effect on SIO mode
- Can be configured via the local display, Bluetooth® wireless technology, handheld terminal or PC with operating program, infinitely variable between 0 to 999 s
- Factory setting: 1 s

16.2.5 Switch output

Preconfigured switching delay available for order:
- 0.5 s when the vibrating fork is covered and 1.0 s when it is uncovered (factory setting)
- 0.25 s when the vibrating fork is covered and 0.25 s when it is uncovered
- 1.5 s when the vibrating fork is covered and 1.5 s when it is uncovered
- 5.0 s when the vibrating fork is covered and 5.0 s when it is uncovered

The user can also set the switching delays for when the fork is covered and uncovered in the range from 1 to 60 seconds independently of one another.

(Operation via display, Bluetooth or FieldCare, DeviceCare, AMS, PDM)

16.2.6 Ex connection data

See safety instructions (XA): All data relating to explosion protection are provided in separate Ex documentation and are available from the Downloads area of the Endress+Hauser website. The Ex documentation is supplied as standard with all devices approved for use in explosion hazardous areas.

16.2.7 Protocol-specific data

- Manufacturer ID: 17 (0x11)
- Device type code: 0x11C4
- Device revision: 1

- HART specification: 7
- DD revision: 1
- Device description files (DTM, DD) information and files at:
  - www.endress.com
  - www.fieldcommgroup.org
- HART load: min. 250 Ω

HART device variables (preset at the factory)

The following measured values are assigned to the device variables at the factory:

Device variable	Measured value
Primary variable (PV) parameter (Primary variable) [1]	Level limit detection [2]
Secondary variable (SV) parameter (Secondary variable)	Sensor frequency [3]
Tertiary variable (TV) parameter (Third variable)	Fork state [4]
Quaternary variable (QV) parameter (Quaternary variable)	Sensor temperature

1) **Primary variable (PV)** parameter is always applied to the current output.
2) In limit detection, the initial state depends on the **Fork state** parameter (covered or uncovered) and the safety function (MIN or MAX)
3) Sensor frequency is the oscillation frequency of the fork
4) Fork state shows the status of the vibrating fork (**Fork covered** option/**Fork uncovered** option)

Choice of HART device variables

- Level limit detection
- Sensor frequency
- Fork state
- Sensor temperature
- Terminal current
  The terminal current is the read-back current on terminal block. Visibility depends on order options or device settings
- Terminal voltage
  Visibility depends on order options or device settings

Supported functions

- Burst mode
- Additional transmitter status
- Device locking

16.2.8 HART data

- Minimum start-up voltage: 10.5 V
- Start-up current: > 3.6 mA
- Start-up time: < 8 s
- Minimum operating voltage: 10.5 V
- Multidrop current: 4 mA

16.2.9 Heartbeat Technology

Heartbeat Technology modules

Heartbeat Technology comprises 3 modules. These three modules combined check, evaluate and monitor device functionality and process conditions.

- Heartbeat Diagnostics
- Heartbeat Verification
- Heartbeat Monitoring

16.3 Environment

16.3.1 Ambient temperature range

The following values apply up to a process temperature of +90 °C (+194 °F). At higher process temperatures, the permitted ambient temperature is reduced (see diagram).
- Without LCD display: −40 to +70 °C (−40 to +158 °F)
- With LCD display: −40 to +70 °C (−40 to +158 °F) with limitations in optical properties, such as display speed and contrast
  Can be used without limitations: −20 to +60 °C (−4 to +140 °F)

The following ambient temperature applies over the entire process temperature range for devices with a temperature spacer: +70 °C (+158 °F)

Outdoor operation in strong sunlight:
- Mount the device in a shaded location
- Avoid direct sunlight, particularly in warmer climatic regions.
- Use a protective cover, can be ordered as an accessory.

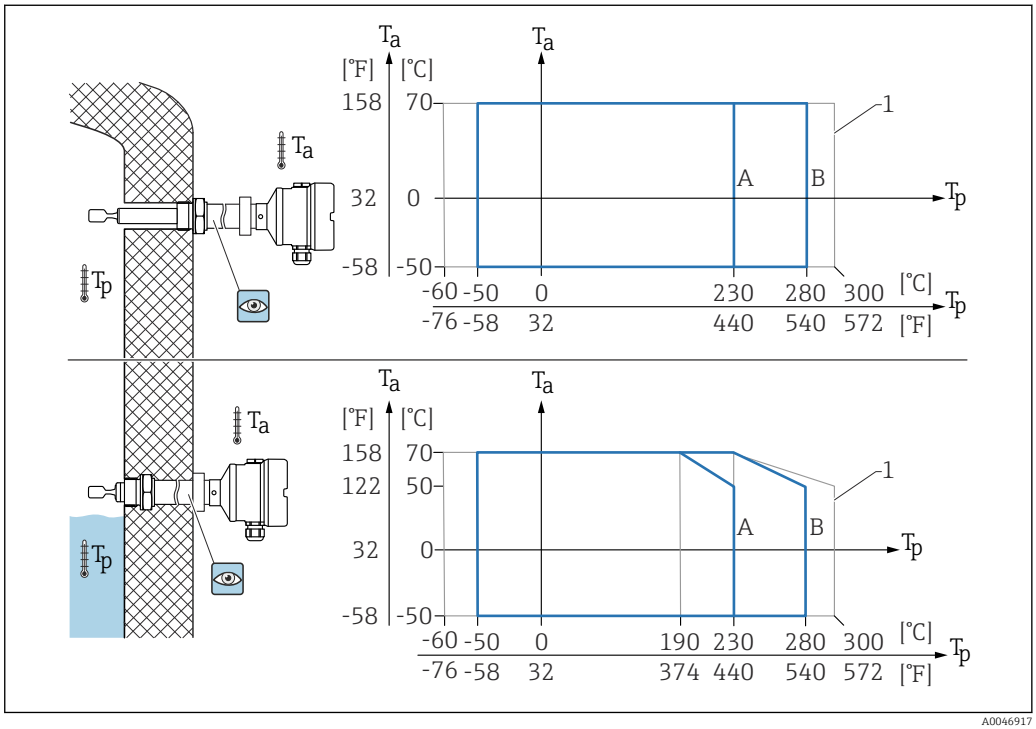

34 *Permitted ambient temperature T_a at the housing as a function of the process temperature T_p in the vessel*

A 230 °C (446 °F) sensor
B 280 °C (536 °F) sensor
1 Max. 50 h on cumulative basis

Hazardous area

In the hazardous area, the permitted ambient temperature can be limited depending on the zones and gas groups. Pay attention to the information in the Ex documentation (XA).

16.3.2 Storage temperature

−40 to +80 °C (−40 to +176 °F)
Optional: −50 °C (−58 °F), −60 °C (−76 °F)

16.3.3 Humidity

Operation up to 100 %. Do not open in a condensing atmosphere.

16.3.4 Operating height

Up to 5 000 m (16 404 ft) above sea level.

16.3.5 Climate class

As per IEC 60068-2-38 test Z/AD

16.3.6 Degree of protection

Testing according to IEC 60529 and NEMA 250

IP68 test condition: 1.83 m H_2O for 24 h

Housing
See cable entries

Cable entries
- M20 coupling, plastic, IP66/68 NEMA Type 4X/6P
- M20 coupling, nickel-plated brass, IP66/68 NEMA Type 4X/6P
- M20 coupling, 316L, IP66/68 NEMA Type 4X/6P
- M20 thread, IP66/68 NEMA Type 4X/6P
- G ½ thread, NPT ½ , IP66/68 NEMA Type 4X/6P

Degree of protection for M12 plug
- When housing is closed and connecting cable is plugged in: IP66/67 NEMA Type 4X
- When housing is open or connecting cable is not plugged in: IP20, NEMA Type 1

NOTICE
M12 plug: Loss of IP protection class due to incorrect installation!
- ▶ The degree of protection only applies if the connecting cable used is plugged in and screwed tight.
- ▶ The degree of protection only applies if the connecting cable used is specified according to IP67 NEMA Type 4X.

If the "M12 plug" option is selected as the electrical connection, **IP66/67 NEMA Type 4X** applies for all housing types.

16.3.7 Vibration resistance

As per IEC60068-2-64-2008
a(RMS) = 50 m/s², f = 5 to 2 000 Hz, t = 3 axes x 2 h

16.3.8 Shock resistance

As per IEC 60068-2-27-2008: 300 m/s² [= 30 g_n] + 18 ms

g_n: standard acceleration of gravity

16.3.9 Mechanical load

Support the device in the event of severe dynamic load. Maximum lateral loading capacity of the pipe extensions and sensors: 75 Nm (55 lbf ft).

For more details, see the "Supporting the device" section.

16.3.10 Pollution degree

Pollution level 2

16.3.11 Electromagnetic compatibility (EMC)

- Electromagnetic compatibility according to EN 61326 series. Interference immunity according to Table 2 (Industrial), interference radiation according to Group 1 Class B
- Electromagnetic compatibility as per NAMUR recommendation EMC NE21
- Maximum deviation during EMC testing: < 0.5 % of span
- Fulfills the requirements of functional safety (SIL) in accordance with EN 61326-3-1 (with FEL60H electronic insert)

For more details, refer to the EU Declaration of Conformity.

16.4 Process

16.4.1 Process temperature range

- −60 to +230 °C (−76 to +446 °F)
- −60 to +280 °C (−76 to +536 °F)/to 300 °C (572 °F) for max. 50 h on cumulative basis
- −50 to +230 °C (−58 to +446 °F) with PFA coating (conductive)

The device can be ordered for use in very aggressive media with a highly corrosion-resistant PFA coating. At medium temperatures up to ≥ 150 °C (302 °F), pay attention to the chemical durability and the increasing risk of damage to the coating from diffusion.

Observe pressure and temperature dependency, see the "Process pressure range of the sensors" section.

16.4.2 Medium conditions

The service life of the device can be impacted in applications where increased hydrogen diffusion through the metallic membrane can be expected.
Typical conditions from which hydrogen diffusion is relevant:
- Temperature: > 180 °C (356 °F)
- Increasing process pressures accelerate hydrogen diffusion

16.4.3 Thermal shock

Without restrictions within the process temperature range.

With PFA coating (conductive): ≤ 120 K/s

16.4.4 Process pressure range

The maximum pressure for the device depends on the lowest-rated element with regard to pressure.

Components are: process connection, optional mounting parts, or accessories.

WARNING

Incorrect design or use of the device may lead to bursting parts!

This may result in severe, possibly irreversible injury to persons and environmental hazards.

- Only operate the device within the specified limits for the components!
- MWP (maximum working pressure): The maximum working pressure is specified on the nameplate. This value refers to a reference temperature of 20 °C (68 °F) and may be present at the device for an unlimited time. Note temperature dependency of MWP. For higher temperatures, refer to the following standards for the permitted pressure values for flanges:EN 1092-1 (materials 1.4435 and 1.4404 are identical with regard to their stability/temperature property and are grouped together in under 13E0 in EN 1092-1 Tab. 18. The chemical composition of the two materials can be identical), ASME B 16.5a, JIS B 2220 (the latest version of the standard applies in each case).
- The Pressure Equipment Directive (2014/68/EU) uses the abbreviation "PS". The abbreviation "PS" corresponds to the maximum working pressure (MWP) of the device
- MWP data that deviate from this is provided in the relevant sections of the Technical Information.

Refer to the following standards for the permitted pressure values of the flanges at higher temperatures:

- pR EN 1092-1: With regard to its stability-temperature property, the material 1.4435 is identical to 1.4404, which is classed as 13E0 in EN 1092-1 Tab. 18. The chemical composition of the two materials can be identical.
- ASME B 16.5
- JIS B 2220

The lowest value from the derating curves of the device and of the selected flange applies in each case.

Devices with CRN approval: maximum 90 bar (1 305 psi) for devices with a pipe extension Information on the Endress+Hauser website: www.endress.com → Downloads.

Process pressure range of the sensors

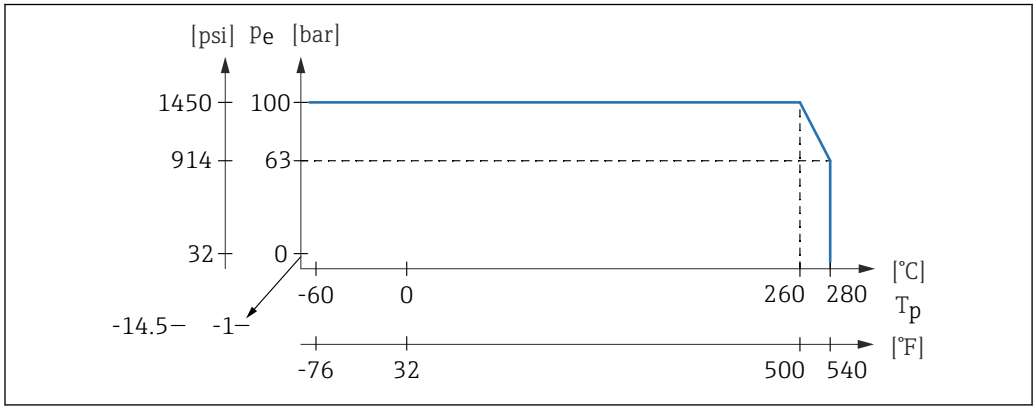

Ordering information: Product Configurator, feature "Application":

- PN: max. 100 bar (1 450 psi) max. 230 °C (446 °F)
- PN: max. 100 bar (1 450 psi) max. 280 °C (536 °F)
- With PFA coating (conductive): max. 40 bar (580 psi) max. 230 °C (446 °F)

16.4.5 Overpressure limit

- Overpressure limit = 1.5 · PN
  Maximum 100 bar (1 450 psi) at 230 °C (446 °F) and 280 °C (536 °F)
- Membrane burst pressure at 200 bar (2 900 psi)

The device function is limited during the pressure test.

Mechanical integrity is guaranteed up to 1.5 times the process nominal pressure PN.

16.4.6 Medium density

Liquids with density > 0.7 g/cm³ (43.7 lb/ft³)
Setting > 0.7 g/cm³ (43.7 lb/ft³), as supplied to the customer

Liquids with density > 0.5 g/cm³ (31.2 lb/ft³)
Setting > 0.5 g/cm³ (31.2 lb/ft³), can be ordered as preset value or configurable

Liquids with density > 0.4 g/cm³ (25.0 lb/ft³)
- Setting > 0.4 g/cm³ (25.0 lb/ft³), can be ordered as preset value or configurable
- Functional safety (SIL) for defined media and process parameters on request

16.4.7 Viscosity

≤ 10 000 mPa·s

16.4.8 Pressure tightness

Up to vacuum

In vacuum evaporation plants, select the 0.4 g/cm³ (25.0 lb/ft³)/ density setting.

16.4.9 Solids contents

Ø ≤ 5 mm (0.2 in)

16.5 Additional technical data

Current Technical Information: Endress+Hauser website: www.endress.com → Downloads.

Index

A
About this document
  Symbols – description . . . 7
Access authorization to parameters
  Read access . . . 32
  Write access . . . 32
Access code . . . 32
  Incorrect input . . . 32

B
Bluetooth® wireless technology . . . 33

C
CE mark . . . 10

D
DD . . . 34
Declaration of Conformity . . . 10
Device description files . . . 34
Device locking, status . . . 42
Diagnostic
  Symbols . . . 47
Diagnostic event . . . 47
  In the operating tool . . . 48
Diagnostic events . . . 47
Diagnostic list . . . 49
Diagnostic message . . . 47
Display values
  For locking status . . . 42
Disposal . . . 55
Document
  Function . . . 7
Document function . . . 7

E
Event history . . . 51
Event list . . . 51
Event text . . . 47

F
Field of application
  Residual risks . . . 9
Filtering the event logbook . . . 51
Functional test using button on electronic insert . . . 31
FV (HART variable) . . . 35

H
HART protocol . . . 37
HART variables . . . 35

I
Installation
  Installation requirements . . . 14
Intended use . . . 9

L
Local display
  see Diagnostic message
  see In alarm condition

O
Operating elements
  Diagnostic message . . . 48
Operation . . . 42
Operational safety . . . 9

P
Post-connection check . . . 29
Product safety . . . 10
PV (HART variable) . . . 35

R
Read access . . . 32
Reading off measured values . . . 42
Repair concept . . . 54
Requirements for personnel . . . 9
Return . . . 55

S
Securing screw . . . 23
Service interface (CDI) . . . 37
Settings
  Adapting the device to process conditions . . . 42
Spare parts . . . 54
Status signal . . . 47
Submenu
  Event list . . . 51
SV (HART variable) . . . 35
System integration . . . 34

T
Technical data
  Surrounding area . . . 63
Transport
  Handling
    Protecting the coating . . . 13
Troubleshooting . . . 44
Turning the display module . . . 21
TV (HART variable) . . . 35

U
Use of the device
  see Intended use
Using the devices
  Borderline cases . . . 9
  Incorrect use . . . 9

W
Workplace safety . . . 9
Write access . . . 32

71783283

www.addresses.endress.com

Endress+Hauser

People for Process Automation