BA01746D/06/EN/05.25-00
71727658
2025-12-01

Valid as of version
01.01.zz (Device firmware)

Operating Instructions
Proline Promass X 300 PROFINET

Coriolis flowmeter

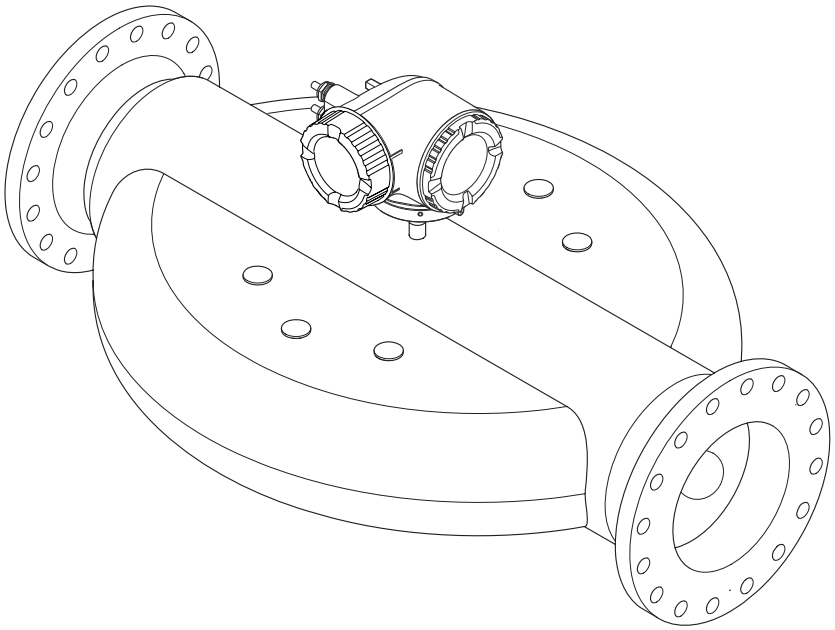

Endress+Hauser
People for Process Automation

- Make sure the document is stored in a safe place such that it is always available when working on or with the device.
- To avoid danger to individuals or the facility, read the "Basic safety instructions" section carefully, as well as all other safety instructions in the document that are specific to working procedures.
- The manufacturer reserves the right to modify technical data without prior notice. Your Endress+Hauser sales organization will supply you with current information and updates to this manual.

Table of contents

1 About this document 6
1.1 Document function 6
1.2 Symbols 6
1.2.1 Safety symbols 6
1.2.2 Electrical symbols 6
1.2.3 Communication-specific symbols 6
1.2.4 Tool symbols 7
1.2.5 Symbols for certain types of information 7
1.2.6 Symbols in graphics 7
1.3 Documentation 8
1.4 Registered trademarks 8

2 Safety instructions 9
2.1 Requirements for the personnel 9
2.2 Intended use 9
2.3 Workplace safety 10
2.4 Operational safety 10
2.5 Product safety 10
2.6 IT security 11
2.7 Device-specific IT security 11
2.7.1 Protecting access via hardware write protection 11
2.7.2 Protecting access via a password 11
2.7.3 Access via web server 12
2.7.4 Access via service interface (port 2): CDI-RJ45 13

3 Product description 14
3.1 Product design 14

4 Incoming acceptance and product identification 15
4.1 Incoming acceptance 15
4.2 Product identification 15
4.2.1 Transmitter nameplate 16
4.2.2 Sensor nameplate 17
4.2.3 Symbols on the device 18

5 Storage and transport 19
5.1 Storage conditions 19
5.2 Transporting the product 19
5.2.1 Measuring devices without lifting lugs 19
5.2.2 Measuring devices with lifting lugs . . 20
5.2.3 Transporting with a fork lift 20
5.3 Packaging disposal 20

6 Installation 21
6.1 Installation requirements 21
6.1.1 Installation position 21
6.1.2 Environmental and process requirements 23
6.1.3 Special installation instructions 25
6.2 Installing the measuring instrument 27
6.2.1 Required tools 27
6.2.2 Preparing the measuring instrument . 28
6.2.3 Installing the measuring instrument . 28
6.2.4 Turning the transmitter housing 28
6.2.5 Turning the display module 29
6.3 Post-installation check 30

7 Electrical connection 31
7.1 Electrical safety 31
7.2 Connecting requirements 31
7.2.1 Required tools 31
7.2.2 Requirements for connection cable . . . 31
7.2.3 Terminal assignment 34
7.2.4 Available device plugs for Proline 300 34
7.2.5 Pin assignment of device plug 34
7.2.6 Preparing the device 35
7.3 Connecting the device 35
7.3.1 Connecting the transmitter 35
7.3.2 Integrating the transmitter into a network 38
7.3.3 Connecting the remote display and operating module DKX001 40
7.4 Potential equalization 40
7.4.1 Requirements 40
7.5 Special connection instructions 41
7.5.1 Connection examples 41
7.6 Hardware settings 43
7.6.1 Setting the device name 43
7.6.2 Activating the default IP address 45
7.7 Ensuring the degree of protection 45
7.8 Post-connection check 46

8 Operation options 47
8.1 Overview of operation options 47
8.2 Structure and function of the operating menu 48
8.2.1 Structure of the operating menu 48
8.2.2 Operating philosophy 49
8.3 Access to operating menu via local display . . . 50
8.3.1 Operational display 50
8.3.2 Navigation view 52
8.3.3 Editing view 54
8.3.4 Operating elements 56
8.3.5 Opening the context menu 56
8.3.6 Navigating and selecting from list . . . 58
8.3.7 Calling the parameter directly 58
8.3.8 Calling up help text 59
8.3.9 Changing the parameters 59

8.3.10 User roles and related access authorization 60
8.3.11 Disabling write protection via access code 60
8.3.12 Enabling and disabling the keypad lock 61
8.4 Access to operating menu via web browser . . . 61
8.4.1 Function range 61
8.4.2 Requirements 62
8.4.3 Connecting the device 63
8.4.4 Logging on 65
8.4.5 User interface 66
8.4.6 Disabling the Web server 67
8.4.7 Logging out 67
8.5 Operation via SmartBlue app 68
8.6 Access to the operating menu via the operating tool 69
8.6.1 Connecting the operating tool 69
8.6.2 FieldCare 72
8.6.3 DeviceCare 73

9 System integration 74

9.1 Overview of device description files 74
9.1.1 Current version data for the device . . . 74
9.1.2 Operating tools 74
9.2 Device master file (GSD) 74
9.2.1 File name of the manufacturer-specific device master file (GSD) 75
9.2.2 File name of the PA Profile device master file (GSD) 75
9.3 Cyclic data transmission 76
9.3.1 Overview of the modules 76
9.3.2 Description of the modules 76
9.3.3 Status coding 85
9.3.4 Factory setting 86
9.3.5 Startup configuration 87
9.4 System redundancy S2 88

10 Commissioning 89

10.1 Post-installation and post-connection check . . 89
10.2 Switching on the measuring instrument 89
10.3 Connecting via FieldCare 89
10.4 Setting the operating language 89
10.5 Initializing the measuring instrument 90
10.6 Configuring the device 90
10.6.1 Defining the tag name 92
10.6.2 Displaying the communication interface 92
10.6.3 Setting the system units 93
10.6.4 Selecting and setting the medium . . . 96
10.6.5 Configuration of the Analog Inputs . . 98
10.6.6 Displaying the I/O configuration 98
10.6.7 Configuring the current input 99
10.6.8 Configuring the status input 101
10.6.9 Configuring the current output 101
10.6.10 Configuring the pulse/frequency/switch output 105
10.6.11 Configuring the relay output 114
10.6.12 Configuring the local display 117
10.6.13 Configuring the low flow cut off 121
10.6.14 Partially filled pipe detection 122
10.7 Advanced settings 123
10.7.1 Using the parameter to enter the access code 124
10.7.2 Calculated process variables 124
10.7.3 Carrying out a sensor adjustment . . . 126
10.7.4 Configuring the totalizer 129
10.7.5 Carrying out additional display configurations 131
10.7.6 WLAN configuration 135
10.7.7 Viscosity application package 137
10.7.8 Concentration Measurement application package 137
10.7.9 Petroleum application package 137
10.7.10 Heartbeat Technology application package 138
10.7.11 Configuration management 138
10.7.12 Using parameters for device administration 139
10.8 Simulation 141
10.9 Protecting settings from unauthorized access 143
10.9.1 Write protection via access code . . . 144
10.9.2 Write protection via write protection switch 145

11 Operation 147

11.1 Reading the device locking status 147
11.2 Adjusting the operating language 147
11.3 Configuring the display 147
11.4 Reading off measured values 147
11.4.1 "Measured variables" submenu 148
11.4.2 Totalizer 158
11.4.3 "Input values" submenu 158
11.4.4 Output values 160
11.5 Adapting the measuring device to the process conditions 162
11.6 Performing a totalizer reset 162
11.6.1 Function scope of "Control Totalizer" parameter 162
11.6.2 Function range of "Reset all totalizers" parameter 163
11.7 Displaying the measured value history 163
11.8 Gas Fraction Handler 166
11.8.1 "Measurement mode" submenu 167
11.8.2 "Medium index" submenu 168

12 Diagnostics and troubleshooting . . 170

12.1 General troubleshooting 170
12.2 Diagnostic information via LEDs 172
12.2.1 Transmitter 172
12.3 Diagnostic information on local display 174
12.3.1 Diagnostic message 174
12.3.2 Calling up remedial actions 176
12.4 Diagnostic information in the web browser . . 176
12.4.1 Diagnostic options 176
12.4.2 Calling up remedial actions 177

12.5 Diagnostic information in FieldCare or DeviceCare . . . 177
12.5.1 Diagnostic options . . . 177
12.5.2 Calling up remedy information . . . 178
12.6 Adapting the diagnostic information . . . 179
12.6.1 Adapting the diagnostic behavior . . . 179
12.7 Overview of diagnostic information . . . 182
12.7.1 Diagnostic of sensor . . . 182
12.7.2 Diagnostic of electronic . . . 189
12.7.3 Diagnostic of configuration . . . 206
12.7.4 Diagnostic of process . . . 219
12.8 Pending diagnostic events . . . 233
12.9 Diagnostic list . . . 233
12.10 Event logbook . . . 234
12.10.1 Reading out the event logbook . . . 234
12.10.2 Filtering the event logbook . . . 235
12.10.3 Overview of information events . . . 235
12.11 Resetting the device . . . 236
12.11.1 Function scope of the "Device reset" parameter . . . 236
12.12 Device information . . . 237
12.13 Firmware history . . . 238

13 Maintenance . . . 239

13.1 Maintenance work . . . 239
13.1.1 Cleaning . . . 239
13.2 Measuring and test equipment . . . 239
13.3 Maintenance services . . . 239

14 Repair . . . 240

14.1 General notes . . . 240
14.1.1 Repair and conversion concept . . . 240
14.1.2 Notes for repair and conversion . . . 240
14.2 Spare parts . . . 240
14.3 Repair services . . . 240
14.4 Return . . . 240
14.5 Disposal . . . 241
14.5.1 Removing the measuring instrument . . . 241
14.5.2 Disposing of the measuring instrument . . . 241

15 Accessories . . . 242

15.1 Device-specific accessories . . . 242
15.1.1 For the transmitter . . . 242
15.2 Communication-specific accessories . . . 243
15.3 Service-specific accessories . . . 243
15.4 System components . . . 244

16 Technical data . . . 245

16.1 Application . . . 245
16.2 Function and system design . . . 245
16.3 Input . . . 246
16.4 Output . . . 249
16.5 Power supply . . . 254
16.6 Performance characteristics . . . 255
16.7 Installation . . . 259
16.8 Environment . . . 259
16.9 Process . . . 260
16.10 Mechanical construction . . . 263
16.11 User interface . . . 265
16.12 Certificates and approvals . . . 269
16.13 Application packages . . . 272
16.14 Accessories . . . 274
16.15 Documentation . . . 274

Index . . . 277

1 About this document

1.1 Document function

These Operating Instructions contain all the information required in the various life cycle phases of the device: from product identification, incoming acceptance and storage, to installation, connection, operation and commissioning, through to troubleshooting, maintenance and disposal.

1.2 Symbols

1.2.1 Safety symbols

⚠ DANGER
This symbol alerts you to a dangerous situation. Failure to avoid this situation will result in serious or fatal injury.

⚠ WARNING
This symbol alerts you to a potentially dangerous situation. Failure to avoid this situation can result in serious or fatal injury.

⚠ CAUTION
This symbol alerts you to a potentially dangerous situation. Failure to avoid this situation can result in minor or medium injury.

NOTICE
This symbol alerts you to a potentially harmful situation. Failure to avoid this situation can result in damage to the product or something in its vicinity.

1.2.2 Electrical symbols

Symbol	Meaning
⎓	Direct current
∼	Alternating current
≂	Direct current and alternating current
⏚	**Ground connection** A grounded terminal which, as far as the operator is concerned, is grounded via a grounding system.
⏚	**Protective earth (PE)** Ground terminals that must be connected to ground prior to establishing any other connections. The ground terminals are located on the interior and exterior of the device: ▪ Interior ground terminal: protective earth is connected to the mains supply. ▪ Exterior ground terminal: device is connected to the plant grounding system.

1.2.3 Communication-specific symbols

Symbol	Meaning
📶	**Wireless Local Area Network (WLAN)** Communication via a wireless, local area network
●	**LED** LED is off.

Symbol	Meaning
	LED LED is on.
	LED LED flashing.

1.2.4 Tool symbols

Symbol	Meaning
	Flat-blade screwdriver
	Allen key
	Open-end wrench

1.2.5 Symbols for certain types of information

Symbol	Meaning
	Permitted Procedures, processes or actions that are permitted.
	Preferred Procedures, processes or actions that are preferred.
	Forbidden Procedures, processes or actions that are forbidden.
	Tip Indicates additional information.
	Reference to documentation
	Reference to page
	Reference to graphic
▶	Notice or individual step to be observed
1., 2., 3....	Series of steps
	Result of a step
	Help in the event of a problem
	Visual inspection

1.2.6 Symbols in graphics

Symbol	Meaning
1, 2, 3, ...	Item numbers
1., 2., 3., ...	Series of steps
A, B, C, ...	Views
A-A, B-B, C-C, ...	Sections
EX	Hazardous area

Symbol	Meaning
	Safe area (non-hazardous area)
	Flow direction

1.3 Documentation

For an overview of the scope of the associated Technical Documentation, refer to the following:

- *Device Viewer* (www.endress.com/deviceviewer): Enter the serial number from the nameplate
- *Endress+Hauser Operations app*: Enter serial number from nameplate or scan matrix code on nameplate.

The following document types are available in the Downloads area of the Endress+Hauser website (www.endress.com/downloads), depending on the device version:

Document type	Purpose and content of the document
Technical Information (TI)	**Planning aid for your device** The document contains all the technical data on the device and provides an overview of the accessories and other products that can be ordered for the device.
Brief Operating Instructions (KA)	**Guide that takes you quickly to the 1st measured value** The Brief Operating Instructions contain all the essential information from incoming acceptance to initial commissioning.
Operating Instructions (BA)	**Your reference document** The Operating Instructions contain all the information that is required in various phases of the life cycle of the device: from product identification, incoming acceptance and storage, to mounting, connection, operation and commissioning through to troubleshooting, maintenance and disposal.
Description of Device Parameters (GP)	**Reference for your parameters** The document provides a detailed explanation of each individual parameter. The description is aimed at those who work with the device over the entire life cycle and perform specific configurations.
Safety instructions (XA)	Depending on the approval, safety instructions for electrical equipment in hazardous areas are also supplied with the device. These are an integral part of the Operating Instructions. The nameplate indicates which Safety Instructions (XA) apply to the device.
Supplementary device-dependent documentation (SD/FY)	Always comply strictly with the instructions in the relevant supplementary documentation. The supplementary documentation is a constituent part of the device documentation.

1.4 Registered trademarks

PROFINET®
Registered trademark of the PROFIBUS Nutzerorganisation e.V. (PROFIBUS User Organization), Karlsruhe, Germany

2 Safety instructions

2.1 Requirements for the personnel

The personnel for installation, commissioning, diagnostics and maintenance must fulfill the following requirements:

- Trained, qualified specialists must have a relevant qualification for this specific function and task.
- Are authorized by the plant owner/operator.
- Are familiar with federal/national regulations.
- Before starting work, read and understand the instructions in the manual and supplementary documentation as well as the certificates (depending on the application).
- Follow instructions and comply with basic conditions.

The operating personnel must fulfill the following requirements:

- Are instructed and authorized according to the requirements of the task by the facility's owner-operator.
- Follow the instructions in this manual.

2.2 Intended use

Application and media

The measuring instrument described in this manual is intended only for the flow measurement of liquids and gases.

Depending on the version ordered, the measuring instrument can also measure potentially explosive, flammable, poisonous and oxidizing media.

Measuring instruments for use in hazardous areas, in hygienic applications, or where there is an increased risk due to pressure, are specially labeled on the nameplate.

To ensure that the measuring instrument remains in proper condition during the operating time:

- Only use the measuring instrument in full compliance with the data on the nameplate and the general conditions listed in the manual and supplementary documentation.
- Using the nameplate, check whether the ordered device is permitted for the intended use in the hazardous area (e.g. explosion protection, pressure vessel safety).
- Use the measuring instrument only for media against which the materials in contact with the process are sufficiently resistant.
- Keep within the specified pressure and temperature range.
- Keep within the specified ambient temperature range.
- Protect the measuring instrument permanently against corrosion from environmental influences.

Incorrect use

Non-designated use can compromise safety. The manufacturer is not liable for damage caused by improper or non-designated use.

⚠ WARNING

Danger of breakage due to corrosive or abrasive fluids and ambient conditions!

- Verify the compatibility of the process fluid with the sensor material.
- Ensure the resistance of all wetted materials during the process.
- Keep within the specified pressure and temperature range.

NOTICE

Verification for borderline cases:

- For special fluids and fluids for cleaning, Endress+Hauser is glad to provide assistance in verifying the corrosion resistance of fluid-wetted materials, but does not accept any warranty or liability as minute changes in the temperature, concentration or level of contamination in the process can alter the corrosion resistance properties.

Residual risks

WARNING

Risk of hot or cold burns! The use of media and electronics with high or low temperatures can produce hot or cold surfaces on the device.

- Mount suitable touch protection.

WARNING

Danger of housing breaking due to measuring tube breakage!

If a measuring tube ruptures, the pressure inside the sensor housing will rise according to the operating process pressure.

- Use a rupture disk.

WARNING

Danger from medium escaping!

For device versions with a rupture disk: medium escaping under pressure can cause injury or material damage.

- Take precautions to prevent injury and material damage if the rupture disk is actuated.

2.3 Workplace safety

For work on and with the device:

- Wear the required personal protective equipment according to federal/national regulations.

2.4 Operational safety

Damage to the device!

- Operate the device in proper technical condition and fail-safe condition only.
- The operator is responsible for the interference-free operation of the device.

Modifications to the device

Unauthorized modifications to the device are not permitted and can lead to unforeseeable dangers!

- If modifications are nevertheless required, consult with the manufacturer.

Repair

To ensure continued operational safety and reliability:

- Carry out repairs on the device only if they are expressly permitted.
- Observe federal/national regulations pertaining to the repair of an electrical device.
- Use only original spare parts and accessories.

2.5 Product safety

This state-of-the-art device is designed and tested in accordance with good engineering practice to meet operational safety standards. It left the factory in a condition in which it is safe to operate.

It meets general safety standards and legal requirements. It also complies with the EU directives listed in the device-specific EU declaration of conformity. The manufacturer confirms this by affixing the CE mark.

2.6 IT security

The manufacturer warranty is valid only if the product is installed and used as described in the Operating Instructions. The product is equipped with security mechanisms to protect it against any inadvertent changes to the settings.

IT security measures, which provide additional protection for the product and associated data transfer, must be implemented by the operators themselves in line with their security standards.

2.7 Device-specific IT security

The device offers a range of specific functions to support protective measures on the operator's side. These functions can be configured by the user and guarantee greater in-operation safety if used correctly. The following list provides an overview of the most important functions:

Function/interface	Factory setting	Recommendation
Write protection via hardware write protection switch → 🗎 11	Not enabled	On an individual basis following risk assessment
Access code (also applies to web server login or FieldCare connection) → 🗎 12	Not enabled (0000)	Assign a customized access code during commissioning
WLAN (order option in display module)	Enabled	On an individual basis following risk assessment
WLAN security mode	Enabled (WPA2-PSK)	Do not change
WLAN passphrase (Password) → 🗎 12	Serial number	Assign an individual WLAN passphrase during commissioning
WLAN mode	Access point	On an individual basis following risk assessment
Web server → 🗎 12	Enabled	On an individual basis following risk assessment
Service interface CDI-RJ45 → 🗎 13	Enabled	-

2.7.1 Protecting access via hardware write protection

Write access to the parameters of the device via the local display, web browser or operating tool (e.g. FieldCare, DeviceCare) can be disabled via a write protection switch (DIP switch on the main electronics module). When hardware write protection is enabled, only read access to the parameters is possible.

Hardware write protection is disabled when the device is delivered → 🗎 145.

2.7.2 Protecting access via a password

Different passwords are available to protect write access to the device parameters or access to the device via the WLAN interface.

- User-specific access code
  Protect write access to the device parameters via the local display, web browser or operating tool (e.g. FieldCare, DeviceCare). Access authorization is clearly regulated through the use of a user-specific access code.
- WLAN passphrase
  The network key protects a connection between an operating unit (e.g. notebook or tablet) and the device via the WLAN interface which can be ordered as an option.
- Infrastructure mode
  When the device is operated in infrastructure mode, the WLAN passphrase corresponds to the WLAN passphrase configured on the operator side.

User-specific access code

Local display, web browser and operating tool (e.g. FieldCare, DeviceCare)
- Write access to the device parameters via the local display, web browser or operating tool (e.g. FieldCare, DeviceCare) can be protected by the modifiable, user-specific access code→ 📖 144.
- When delivered, the device does not have an access code; the default value is *0000* (open).

WLAN passphrase: Operation as WLAN access point

A connection between an operating unit (e.g. notebook or tablet) and the device via the WLAN interface (→ 📖 71), which can be ordered as an optional extra, is protected by the network key. The WLAN authentication of the network key complies with the IEEE 802.11 standard.

When the device is delivered, the network key is pre-defined depending on the device. It can be changed via the **WLAN settings** submenu in the **WLAN passphrase** parameter (→ 📖 137).

Infrastructure mode

A connection between the device and WLAN access point is protected by means of an SSID and passphrase on the system side. Please contact the relevant system administrator for access.

General notes on the use of passwords

- The access code and network key supplied with the device should be changed during commissioning for security reasons.
- Follow the general rules for generating a secure password when defining and managing the access code or network key.
- The user is responsible for the management and careful handling of the access code and network key.
- For information on configuring the access code or on what to do if you lose the password, for example, see "Write protection via access code" → 📖 144.

2.7.3 Access via web server

The integrated web server can be used to operate and configure the device via a web browser → 📖 61. The connection is established via the service interface (CDI-RJ45), the terminal connection for signal transmission with PROFINET (RJ45 plug) or WLAN interface.

The web server is enabled when the device is delivered. The web server can be disabled if necessary via the **Web server functionality** parameter (e.g., after commissioning).

The device and status information can be hidden on the login page. This prevents unauthorized access to the information.

For detailed information on device parameters, see: Description of Device Parameters.

2.7.4 Access via service interface (port 2): CDI-RJ45

The device can be connected to a network via the service interface. Device-specific functions guarantee the secure operation of the device in a network.

The use of relevant industrial standards and guidelines that have been defined by national and international safety committees, such as IEC/ISA62443 or the IEEE, is recommended. This includes organizational security measures such as the assignment of access authorization as well as technical measures such as network segmentation.

The device can be integrated into a ring topology. The device is integrated via the terminal connection for signal transmission, output 1 (port 1) and the terminal connection to the service interface (port 2)→ 39.

For detailed information on connecting transmitters with an Ex de approval, see separate document "Safety instructions" (XA) for the device.

3 Product description

The device consists of a transmitter and a sensor.

The device is available as a compact version:
The transmitter and sensor form a mechanical unit.

3.1 Product design

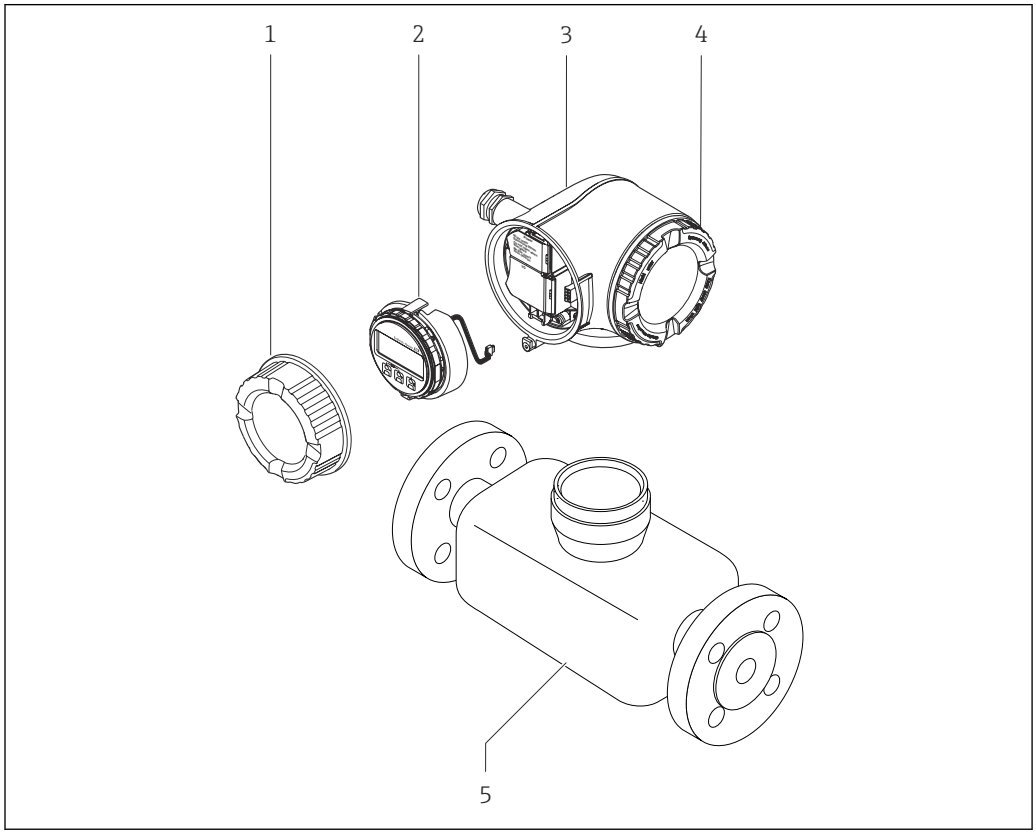

1 Important components of a measuring device

1 Connection compartment cover
2 Display module
3 Transmitter housing
4 Electronics compartment cover
5 Sensor

4 Incoming acceptance and product identification

4.1 Incoming acceptance

On receipt of the delivery:

1. Check the packaging for damage.
   ↳ Report all damage immediately to the manufacturer.
   Do not install damaged components.
2. Check the scope of delivery using the delivery note.
3. Compare the data on the nameplate with the order specifications on the delivery note.
4. Check the technical documentation and all other necessary documents, e.g. certificates, to ensure they are complete.

If one of the conditions is not satisfied, contact the manufacturer.

4.2 Product identification

The device can be identified in the following ways:
- Nameplate
- Order code with details of the device features on the delivery note
- Enter the serial numbers from the nameplates in the *Device Viewer* (www.endress.com/deviceviewer): all the information about the device is displayed.
- Enter the serial numbers from the nameplates into the *Endress+Hauser Operations app* or scan the DataMatrix code on the nameplate with the *Endress+Hauser Operations app*: all the information about the device is displayed.

For an overview of the scope of the associated Technical Documentation, refer to the following:
- The "Additional standard device documentation" and "Supplementary device-dependent documentation" sections
- The *Device Viewer*: Enter the serial number from the nameplate (www.endress.com/deviceviewer)
- The *Endress+Hauser Operations app*: Enter the serial number from the nameplate or scan the DataMatrix code on the nameplate.

4.2.1 Transmitter nameplate

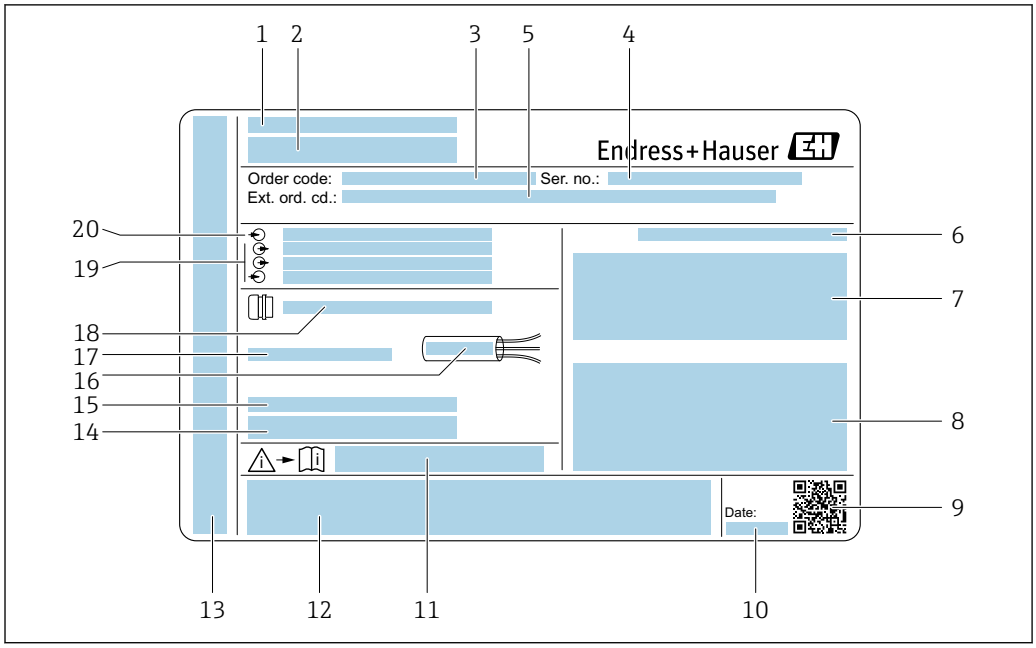

2 *Example of a transmitter nameplate*

1 *Manufacturer/certificate holder*
2 *Name of the transmitter*
3 *Order code*
4 *Serial number (Ser. no.)*
5 *Extended order code (Ext. ord. cd.)*
6 *Degree of protection*
7 *Space for approvals: use in hazardous areas*
8 *Electrical connection data: available inputs and outputs*
9 *2-D matrix code*
10 *Manufacturing date: year-month*
11 *Document number of safety-related supplementary documentation*
12 *Space for approvals and certificates: e.g. CE mark, RCM symbol*
13 *Space for degree of protection of connection and electronics compartment when used in hazardous areas*
14 *Firmware version (FW) and device revision (Dev. Rev.) from the factory*
15 *Space for additional information in the case of special products*
16 *Permitted temperature range for cable*
17 *Permitted ambient temperature (T_a)*
18 *Information on cable gland*
19 *Available inputs and outputs, supply voltage*
20 *Electrical connection data: supply voltage*

4.2.2 Sensor nameplate

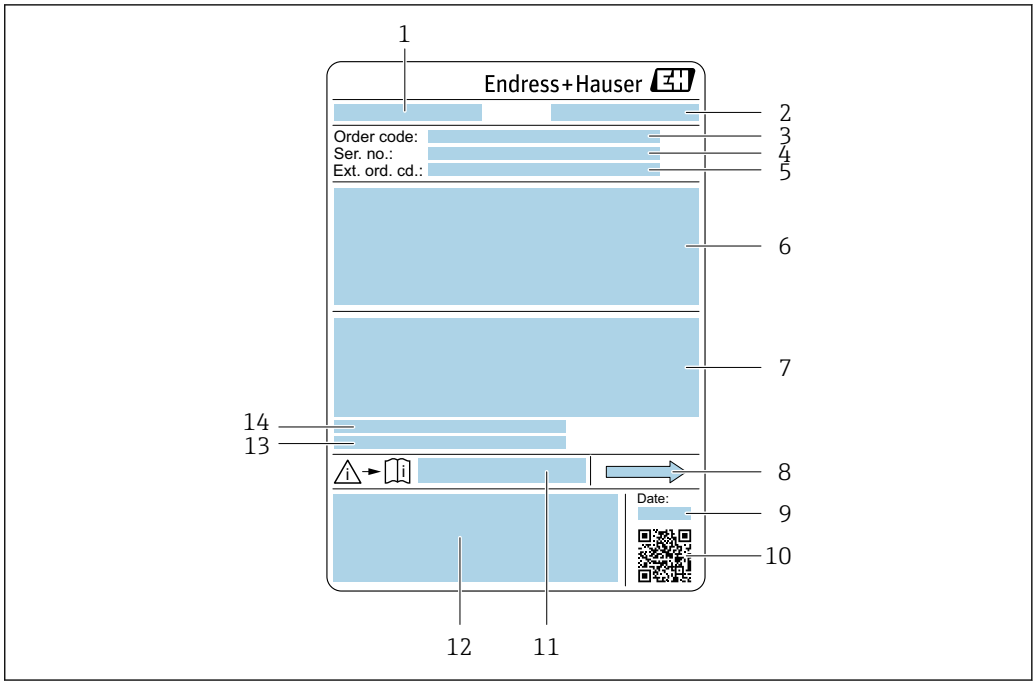

A0029199

3 *Example of a sensor nameplate*

1 *Name of sensor*
2 *Manufacturer/certificate holder*
3 *Order code*
4 *Serial number (Ser. no.)*
5 *Extended order code (Ext. ord. cd.)*
6 *Nominal diameter of the sensor; flange nominal diameter/nominal pressure; sensor test pressure; medium temperature range; material of measuring tube and manifold; sensor-specific information: e.g. pressure range of sensor housing, wide-range density specification (special density calibration)*
7 *Approval information for explosion protection, Pressure Equipment Directive and degree of protection*
8 *Flow direction*
9 *Manufacturing date: year-month*
10 *2-D matrix code*
11 *Document number of safety-related supplementary documentation*
12 *CE mark, RCM symbol*
13 *Surface roughness*
14 *Permitted ambient temperature (T_a)*

Order code
The measuring device is reordered using the order code.

Extended order code
- The device type (product root) and basic specifications (mandatory features) are always listed.
- Of the optional specifications (optional features), only the safety and approval-related specifications are listed (e.g. LA). If other optional specifications are also ordered, these are indicated collectively using the # placeholder symbol (e.g. #LA#).
- If the ordered optional specifications do not include any safety and approval-related specifications, they are indicated by the + placeholder symbol (e.g. XXXXXX-ABCDE +).

4.2.3 Symbols on the device

Symbol	Meaning
⚠	**WARNING!** This symbol alerts you to a dangerous situation. Failure to avoid this situation can result in serious or fatal injury. Please consult the documentation for the measuring instrument to discover the type of potential danger and measures to avoid it.
📖	**Reference to documentation** Refers to the corresponding device documentation.
⏚	**Protective ground connection** A terminal that must be connected to the ground prior to establishing any other connections.

5 Storage and transport

5.1 Storage conditions

Observe the following notes for storage:
- Store in the original packaging to ensure protection from shock.
- Do not remove protective covers or protective caps installed on process connections. They prevent mechanical damage to the sealing surfaces and contamination in the measuring tube.
- Protect from direct sunlight. Avoid unacceptably high surface temperatures.
- Store in a dry and dust-free place.
- Do not store outdoors.

Storage temperature → 259

5.2 Transporting the product

Transport the measuring device to the measuring point in the original packaging.

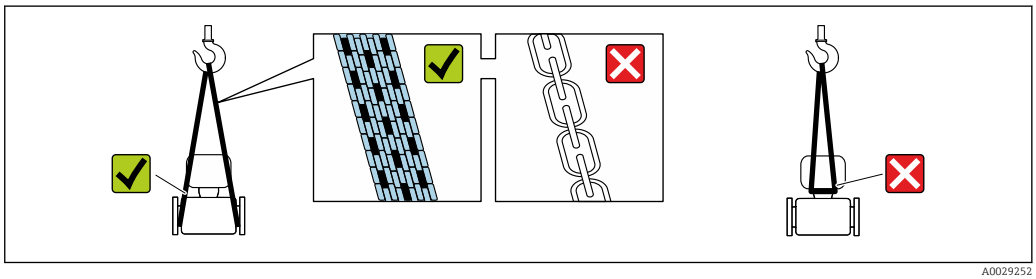

A0029252

Do not remove protective covers or caps installed on process connections. They prevent mechanical damage to the sealing surfaces and contamination in the measuring tube.

5.2.1 Measuring devices without lifting lugs

WARNING

Center of gravity of the measuring device is higher than the suspension points of the webbing slings.

Risk of injury if the measuring device slips.
- Secure the measuring device against slipping or turning.
- Observe the weight specified on the packaging (stick-on label).

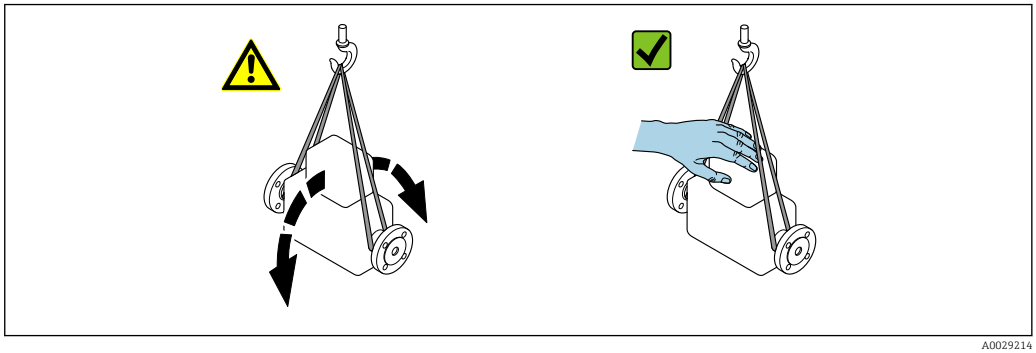

A0029214

5.2.2 Measuring devices with lifting lugs

⚠ CAUTION

Special transportation instructions for devices with lifting lugs

- ▶ Only use the lifting lugs fitted on the device or flanges to transport the device.
- ▶ The device must always be secured at two lifting lugs at least.

5.2.3 Transporting with a fork lift

If transporting in wood crates, the floor structure enables the crates to be lifted lengthwise or at both sides using a forklift.

5.3 Packaging disposal

All packaging materials are environmentally friendly and 100% recyclable:

- Outer packaging of device
  Stretch wrap made of polymer in accordance with EU Directive 2002/95/EC (RoHS)
- Packaging
  - Wood crate treated in accordance with ISPM 15 standard, confirmed by IPPC logo
  - Cardboard box in accordance with European packaging guideline 94/62/EC, recyclability confirmed by Resy symbol
- Transport material and fastening fixtures
  - Disposable plastic pallet
  - Plastic straps
  - Plastic adhesive strips
- Filler material
  Paper pads

6 Installation

6.1 Installation requirements

6.1.1 Installation position

Mounting location

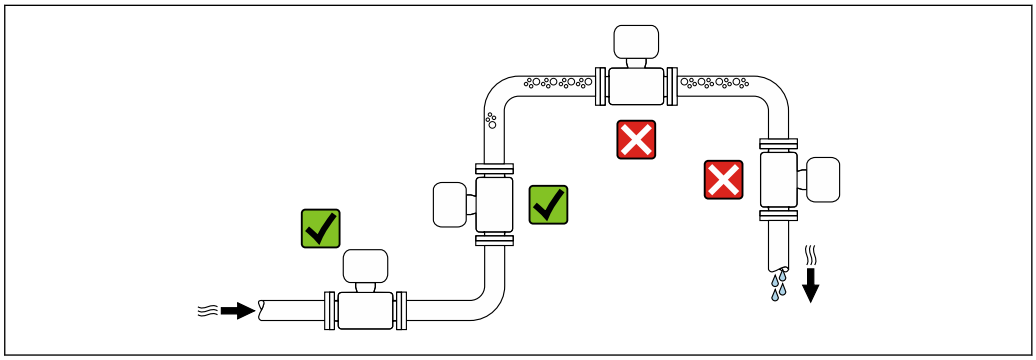

A0028772

To avoid measurement errors caused by gas bubble formation in the measuring tube, avoid the following installation locations in the pipe:
- Highest point of a pipeline
- Directly upstream of a free pipe outlet in a down pipe

Installation in down pipes

However, the following installation suggestion allows for installation in an open vertical pipeline. Pipe restrictions or the use of an orifice with a smaller cross-section than the nominal diameter prevent the sensor running empty while measurement is in progress.

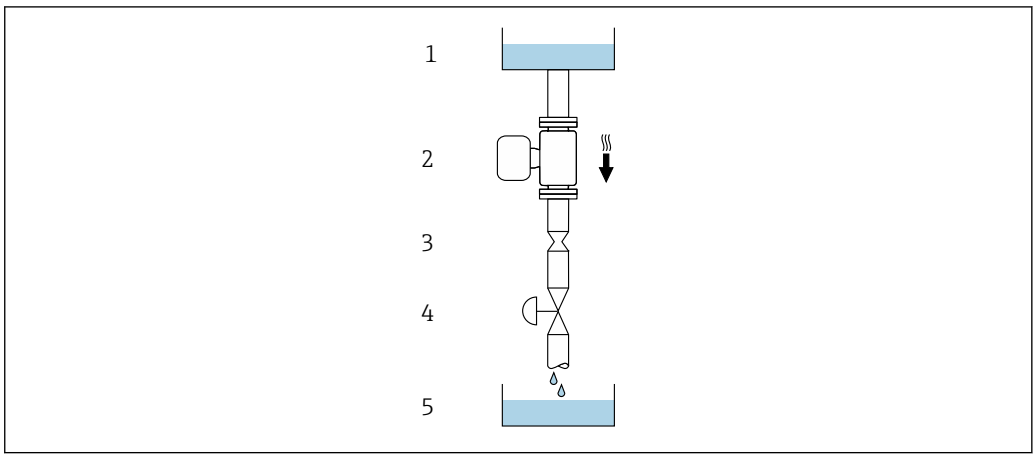

A0028773

4 *Installation in a down pipe (e.g. for batching applications)*

1 *Supply tank*
2 *Sensor*
3 *Orifice plate, pipe restriction*
4 *Valve*
5 *Filling container*

DN/NPS		Ø orifice plate, pipe restriction	
[mm]	[in]	[mm]	[in]
300	12	210	8.27
350	14	210	8.27
400	16	210	8.27

Orientation

The direction of the arrow on the sensor nameplate helps you to install the sensor according to the flow direction (direction of medium flow through the piping).

Orientation			Recommendation
A	Vertical orientation	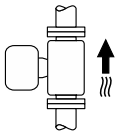 A0015591	✓✓ 1)
B	Horizontal orientation, transmitter at top	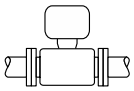 A0015589	✓✓ 2) → 5, 22
C	Horizontal orientation, transmitter at bottom	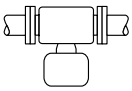 A0015590	✓✓ 3) → 5, 22
D	Horizontal orientation, transmitter at side	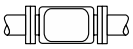 A0015592	✓ → 5, 22

1) This orientation is recommended to ensure self-draining.
2) Applications with low process temperatures may reduce the ambient temperature. To maintain the minimum ambient temperature for the transmitter, this orientation is recommended.
3) Applications with high process temperatures may increase the ambient temperature. To maintain the maximum ambient temperature for the transmitter, this orientation is recommended.

If a sensor is installed horizontally with a curved measuring tube, match the position of the sensor to the medium properties.

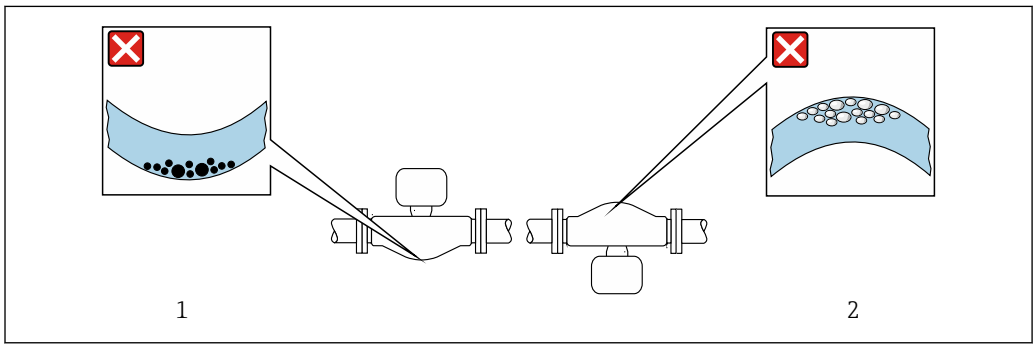

A0028774

5 Orientation of sensor with curved measuring tube

1 Avoid this orientation for media with entrained solids: Risk of solids accumulating
2 Avoid this orientation for outgassing media: Risk of gas accumulating

Inlet and outlet runs

No special precautions need to be taken for fittings that create turbulence, such as valves, elbows or T-pieces, as long as no cavitation occurs → 23.

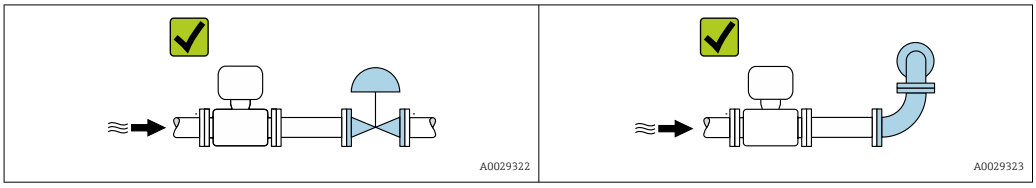

Installation dimensions

For the dimensions and installed lengths of the device, see the "Technical Information" document, "Mechanical construction" section

6.1.2 Environmental and process requirements

Ambient temperature range

Measuring instrument	▪ −40 to +60 °C (−40 to +140 °F) ▪ Order code for "Test, certificate", option JP: −50 to +60 °C (−58 to +140 °F)
Readability of the local display	−20 to +60 °C (−4 to +140 °F) The readability of the display may be impaired at temperatures outside the temperature range.

Dependency of ambient temperature on medium temperature → 260

- If operating outdoors:
  Avoid direct sunlight, particularly in warm climatic regions.

You can order a weather protection cover from Endress+Hauser. → 242.

Static pressure

It is important that cavitation does not occur, or that gases entrained in the liquids do not outgas.

Cavitation is caused if the pressure drops below the vapor pressure:
- In liquids that have a low boiling point (e.g. hydrocarbons, solvents, liquefied gases)
- In suction lines

- Ensure the static pressure is sufficiently high to prevent cavitation and outgassing.

For this reason, the following mounting locations are recommended:
- At the lowest point in a vertical pipe
- Downstream from pumps (no danger of vacuum)

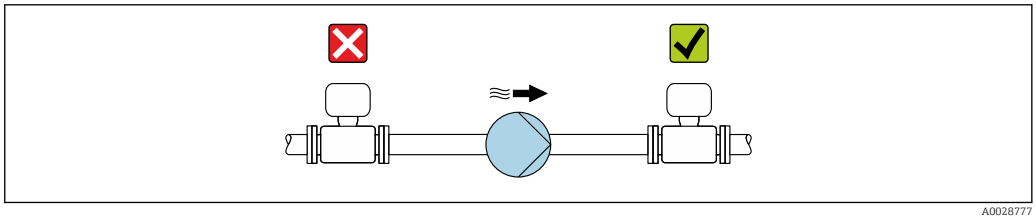

Thermal insulation

In the case of some fluids, it is important to keep the heat radiated from the sensor to the transmitter to a low level. A wide range of materials can be used for the required insulation.

The following device versions are recommended for applications with thermal insulation:
Version with extended neck:
Order code for "Measuring tube material", option SA with an extended neck length of 105 mm (4.13 in).

NOTICE

Electronics overheating on account of thermal insulation!

- Recommended orientation: horizontal orientation, transmitter housing pointing downwards.
- Do not insulate the transmitter housing .
- Maximum permissible temperature at the lower end of the transmitter housing: 80 °C (176 °F)
- Thermal insulation with exposed extension neck: We recommend that you do not insulate the extension neck in order to ensure optimum dissipation of heat.

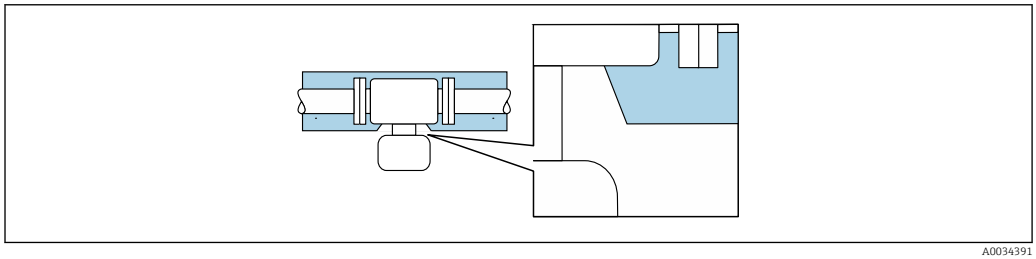

A0034391

6 *Thermal insulation with exposed extension neck*

Heating

NOTICE

Electronics can overheat due to elevated ambient temperature!

- Observe maximum permitted ambient temperature for the transmitter.
- Depending on the medium temperature, take the device orientation requirements into account.

Under critical climatic conditions, in particular, it is important to ensure that the temperature difference between the ambient temperature and the medium temperature is not >100 K. Suitable measures must be taken, such as heating or insulation.

NOTICE

Danger of overheating when heating

- Ensure that the temperature at the lower end of the transmitter housing does not exceed 80 °C (176 °F).
- Ensure that sufficient convection takes place at the transmitter neck.
- Ensure that a sufficiently large area of the transmitter neck remains exposed. The uncovered part serves as a radiator and protects the electronics from overheating and excessive cooling.
- When using in potentially explosive atmospheres, observe the information in the device-specific Ex documentation. For detailed information on the temperature tables, see the separate document entitled "Safety Instructions" (XA) for the device.

Heating options

If a medium requires that no heat loss should occur at the sensor, users can avail of the following heating options:
- Electrical heating, e.g. with electric band heaters [1)]
- Via pipes carrying hot water or steam
- Via heating jackets

Vibrations

The high oscillation frequency of the measuring tubes ensures that the correct operation of the measuring system is not influenced by plant vibrations.

6.1.3 Special installation instructions

Drainability

When installed vertically, the measuring tubes can be drained completely and protected against buildup.

Hygienic compatibility

- When installing in hygienic applications, please refer to the information in the "Certificates and approvals/hygienic compatibility" section
- In the case of measuring devices with the order code for "Housing", option B "Stainless, hygienic", to seal the connection compartment cover, screw it closed finger-tight and tighten it by another 45° (corresponds to 15 Nm).

Rupture disk

Process-related information: → 262.

WARNING

Danger from medium escaping!
Medium escaping under pressure can cause injury or material damage.
- Take precautions to prevent danger to persons and damage if the rupture disk is actuated.
- Observe the information on the rupture disk sticker.
- Make sure that the function and operation of the rupture disk is not impeded through the installation of the device.
- Do not use a heating jacket.
- Do not remove or damage the rupture disk.

The position of the rupture disk is indicated by a sticker affixed beside it.

The transportation guard must be removed.

The existing connecting nozzles are not intended for the purpose of rinsing or pressure monitoring, but instead serve as the mounting location for the rupture disk.

In the event of a failure of the rupture disk, a drain device can be screwed onto the internal thread of the rupture disk in order to drain off any escaping medium.

1) The use of parallel electric band heaters is generally recommended (bidirectional electricity flow). Particular considerations must be made if a single-wire heating cable is to be used. Additional information is provided in the document EA01339D "Installation instructions for electrical trace heating systems".

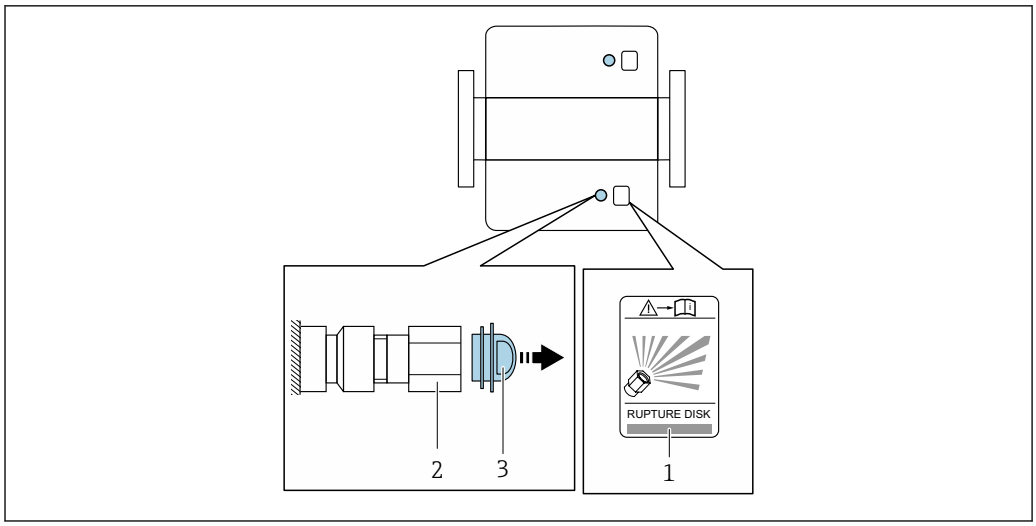

A0029944

1 *Rupture disk label*
2 *Rupture disk with 1/2" NPT internal thread and 1" width across flats*
3 *Transport protection*

For information on the dimensions, see the "Technical Information" document, "Mechanical construction" section (accessories).

Zero point verification and zero adjustment

All measuring instruments are calibrated in accordance with state-of-the-art technology. Calibration takes place under reference conditions → 255. Therefore, a zero adjustment in the field is generally not required.

Experience shows that zero adjustment is advisable only in special cases:
- To achieve maximum measurement accuracy even with low flow rates.
- Under extreme process or operating conditions (e.g. very high process temperatures or very high-viscosity media).
- For gas applications with low pressure.

To achieve the highest possible measurement accuracy at low flow rates, the installation must protect the sensor from mechanical stress during operation.

To get a representative zero point, ensure that
- any flow in the device is prevented during the adjustment
- the process conditions (e.g. pressure, temperature) are stable and representative

Verification and adjustment cannot be performed if the following process conditions are present:
- Gas pockets
  Ensure that the system has been sufficiently flushed with the medium. Repeat flushing can help to eliminate gas pockets
- Thermal circulation
  In the event of temperature differences (e.g. between the measuring tube inlet and outlet section), induced flow can occur even if the valves are closed due to thermal circulation in the device
- Leaks at the valves
  If the valves are not leak-tight, flow is not sufficiently prevented when determining the zero point

If these conditions cannot be avoided, it is advisable to keep the factory setting for the zero point.

Protective cover

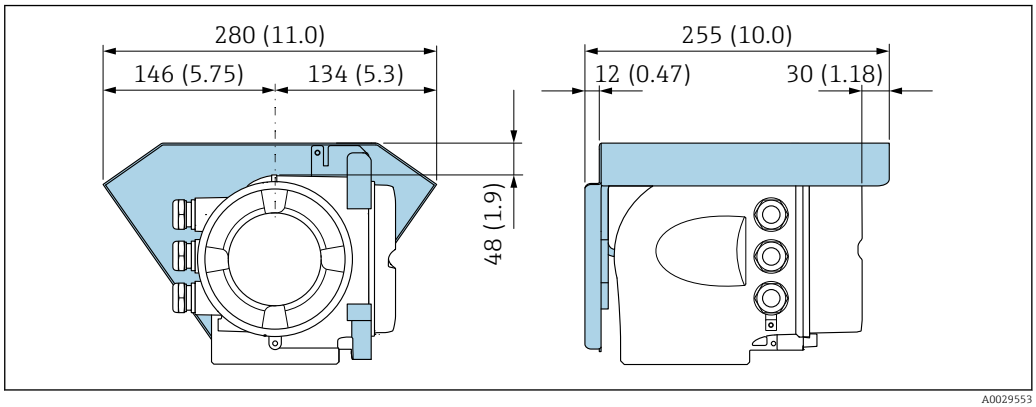

7 *Unit mm (in)*

Cover lock

NOTICE

Order code "Housing", option L "Cast, stainless": The covers of the transmitter housing are provided with a borehole to lock the cover.

The cover can be locked using screws and a chain or cable provided by the customer on site.

- The use of stainless steel chains or cables is recommended.
- If a protective coating is applied, it is recommended to use a heat shrink tube to protect the housing paint.

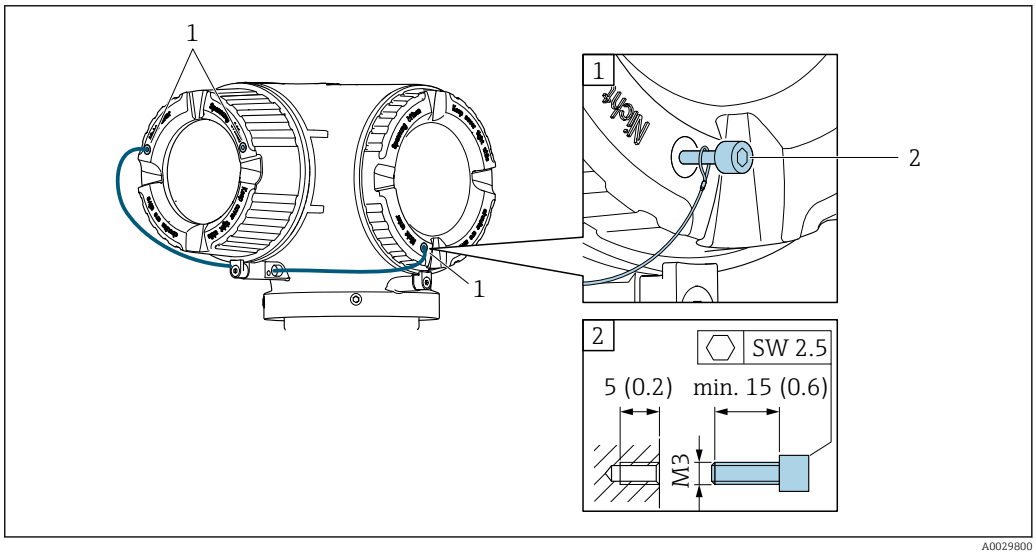

1 *Cover borehole for the securing screw*
2 *Securing screw to lock the cover*

6.2 Installing the measuring instrument

6.2.1 Required tools

For sensor

For flanges and other process connections: Use a suitable mounting tool.

6.2.2 Preparing the measuring instrument

1. Remove all remaining transport packaging.
2. Remove any protective covers or protective caps present from the sensor.
3. Remove stick-on label on the electronics compartment cover.

6.2.3 Installing the measuring instrument

WARNING

Danger due to improper process sealing!

- Ensure that the inside diameters of the gaskets are greater than or equal to that of the process connections and piping.
- Ensure that the seals and sealing surfaces are clean and undamaged.
- Secure the seals correctly.

1. Ensure that the direction of the arrow on the nameplate of the sensor matches the flow direction of the medium.
2. Install the measuring instrument or turn the transmitter housing so that the cable entries do not point upwards.

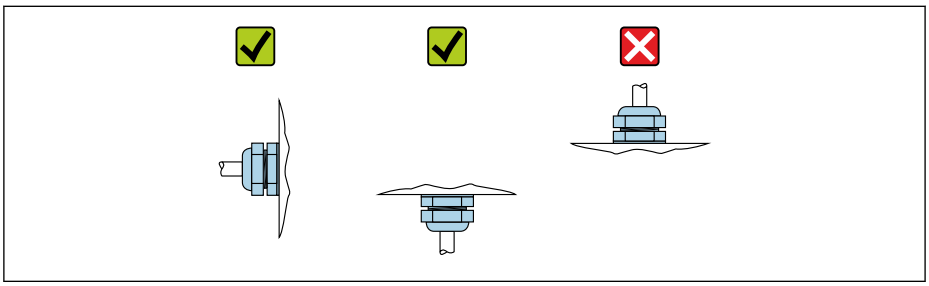

A0029263

6.2.4 Turning the transmitter housing

To provide easier access to the connection compartment or display module, the transmitter housing can be turned.

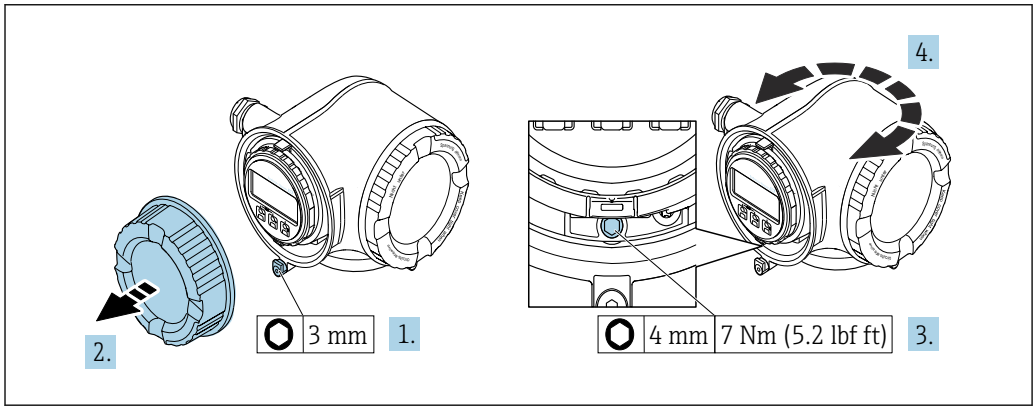

A0029993

8 *Housing in non-Ex version*

1. Depending on the device version: Loosen the securing clamp of the connection compartment cover.
2. Unscrew the connection compartment cover.
3. Loosen the fixing screw.
4. Turn the housing to the desired position.
5. Tighten the securing screw.

6. Screw on the connection compartment cover.
7. Depending on the device version: Attach the securing clamp of the connection compartment cover.

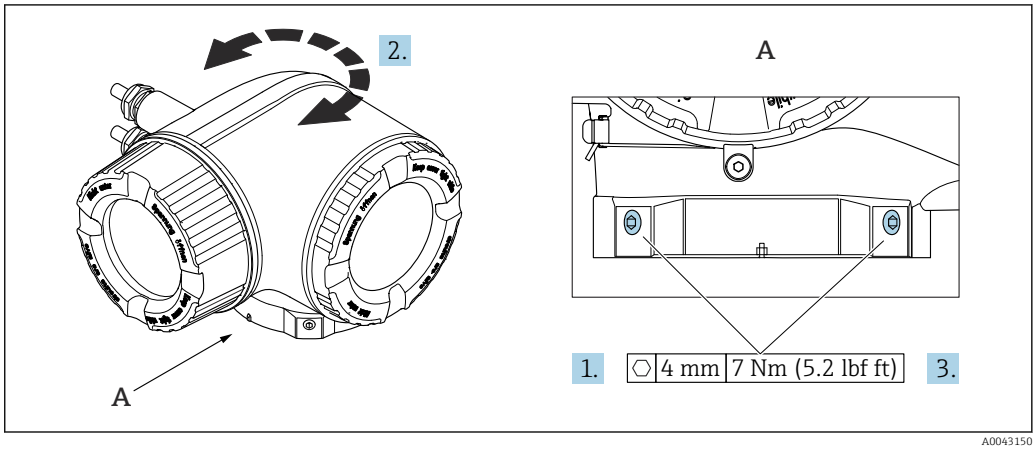

9 *Ex housing*

1. Loosen the fixing screws.
2. Turn the housing to the desired position.
3. Tighten the securing screws.

6.2.5 Turning the display module

The display module can be turned to optimize display readability and operability.

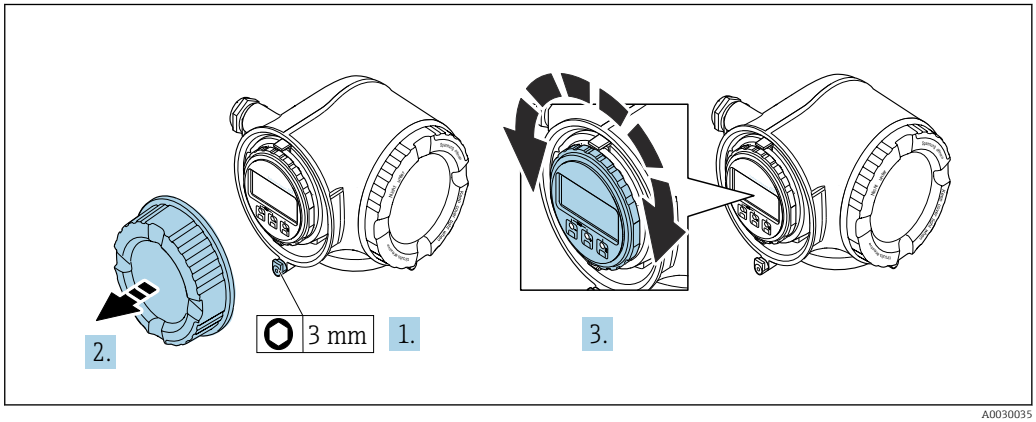

1. Depending on the device version: Loosen the securing clamp of the connection compartment cover.
2. Unscrew the connection compartment cover.
3. Turn the display module to the desired position: max. 8 × 45° in each direction.
4. Screw on the connection compartment cover.
5. Depending on the device version: Attach the securing clamp of the connection compartment cover.

6.3 Post-installation check

Is the device undamaged (visual inspection)?	❑
Does the measuring instrument correspond to the measuring point specifications? For example: ▪ Process temperature → 🗎 260 ▪ Pressure (refer to the "Pressure-temperature ratings" section of the "Technical Information" document). ▪ Ambient temperature ▪ Measuring range	❑
Has the correct orientation for the sensor been selected → 🗎 22? ▪ According to sensor type ▪ According to medium temperature ▪ According to medium properties (outgassing, with entrained solids)	❑
Does the arrow on the sensor match the direction of flow of the medium? → 🗎 22?	❑
Is the tag name and labeling correct (visual inspection)?	❑
Is the device sufficiently protected from precipitation and direct sunlight?	❑
Are the securing screw and securing clamp tightened securely?	❑

7 Electrical connection

WARNING

Live parts! Incorrect work performed on the electrical connections can result in an electric shock.

- Set up a disconnecting device (switch or power-circuit breaker) to easily disconnect the device from the supply voltage.
- In addition to the device fuse, include an overcurrent protection unit with max. 10 A in the plant installation.

7.1 Electrical safety

In accordance with applicable national regulations.

7.2 Connecting requirements

7.2.1 Required tools

- For cable entries: Use corresponding tools
- For securing clamp: Allen key 3 mm
- Wire stripper
- When using stranded cables: Crimper for wire end ferrule
- For removing cables from terminal: Flat blade screwdriver ≤ 3 mm (0.12 in)

7.2.2 Requirements for connection cable

The connecting cables provided by the customer must fulfill the following requirements.

Protective grounding cable for the outer ground terminal

Conductor cross-section < 6 mm^2 (10 AWG)

Larger cross-sections can be connected using a cable lug.

The grounding impedance must be less than 2 Ω.

Permitted temperature range

- The installation guidelines that apply in the country of installation must be observed.
- The cables must be suitable for the minimum and maximum temperatures to be expected.

Power supply cable (incl. conductor for the inner ground terminal)

Standard installation cable is sufficient.

Signal cable

For custody transfer, all signal lines must be shielded cables (tinned copper braiding, optical coverage ≥ 85 %). The cable shield must be connected on both sides.

4 to 20 mA current input

Standard installation cable is sufficient.

Pulse/frequency/switch output

Standard installation cable is sufficient.

Relay output

Standard installation cable is sufficient.

Status input

Standard installation cable is sufficient.

PROFINET

Only PROFINET cables.

See https://www.profibus.com "PROFINET Planning guideline".

Cable diameter

- Cable glands supplied:
  M20 × 1.5 with cable Ø 6 to 12 mm (0.24 to 0.47 in)
- Spring-loaded terminals: Suitable for strands and strands with ferrules.
  Conductor cross-section 0.2 to 2.5 mm^2 (24 to 12 AWG)

Requirements for connecting cable – remote display and operating module DKX001

Optionally available connecting cable

A cable is supplied depending on the order option
- Order code for measuring device: order code **030** for "Display; operation", option **O**
  or
- Order code for measuring device: order code **030** for "Display; operation", option **M**
  and
- Order code for DKX001: order code **040** for "Cable", option **A, B, D, E**

Standard cable	2 × 2 × 0.34 mm^2 (22 AWG) PVC cable with common shield (2 pairs, pair-stranded)
Flame resistance	According to DIN EN 60332-1-2
Oil resistance	According to DIN EN 60811-2-1
Shield	Tin-plated copper braid, optical cover ≥ 85 %
Capacitance: core/shield	≤ 200 pF/m
L/R	≤ 24 µH/Ω
Available cable length	5 m (15 ft)/10 m (35 ft)/20 m (65 ft)/30 m (100 ft)
Continuous operating temperature	When mounted in a fixed position: −50 to +105 °C (−58 to +221 °F); when cable can move freely: −25 to +105 °C (−13 to +221 °F)

Standard cable - customer-specific cable

No cable is supplied with the device and must be provided by the customer:
Order code for DKX001: Order code **040** for "Cable", option **1** "None, provided by customer, max. 300 m"

A standard cable with the following minimum requirements can be used as the connecting cable, even in the hazardous area (Zone 2, Class I, Division 2 and Zone 1, Class I, Division 1):

Standard cable	4 wires (2 pairs); pair-stranded with common shield, minimum wire cross-section 0.34 mm^2 (22 AWG)
Shield	Tin-plated copper braid, optical cover ≥ 85 %
Cable impedance (pair)	Minimum 80 Ω
Cable length	Maximum 300 m (1 000 ft), maximum loop impedance 20 Ω

Capacitance: core/shield	Maximum 1 000 nF for Zone 1, Class I, Division 1
L/R	Maximum 24 µH/Ω for Zone 1, Class I, Division 1

7.2.3 Terminal assignment

Transmitter: supply voltage, input/outputs

The terminal assignment of the inputs and outputs depends on the individual order version of the device. The device-specific terminal assignment is documented on an adhesive label in the terminal cover.

Supply voltage		Input/output 1 (Port 1) [1]	Input/output 2		Input/output 3		Service interface (Port 2) [1]
1 (+)	2 (–)	RJ45	24 (+)	25 (–)	22 (+)	23 (–)	CDI-RJ45
			Device-specific terminal assignment: adhesive label in terminal cover.				

1) Port can be used for communication or as a service interface (CDI-RJ45).

Terminal assignment of the remote display and operating module → 40.

For information on the pin assignment of the device plugs, see the Operating Instructions for the device.

7.2.4 Available device plugs for Proline 300

Device plugs may not be used in hazardous areas!

Order code for "Input; output 1", option RA "PROFINET"

Order code for "Electrical connection"	Cable entry/connection	
	2	3
L, N, P, U	Connector M12×1	–
R [1) 2)], S [1) 2)], T [1) 2)], V [1) 2)]	Connector M12×1	Connector M12×1

1) Not compatible with an external WLAN antenna (order code for "Accessory enclosed", option P8), an RJ45 M12 adapter for the service interface (order code for "Accessory mounted", option NB)
2) Suitable for integrating the device into a ring topology.

7.2.5 Pin assignment of device plug

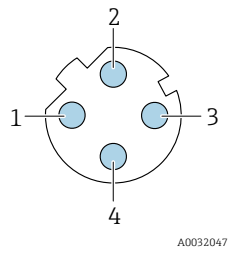

Pin	Assignment		Coding	Plug/socket
1	+	TD +	D	Socket
2	+	RD +		
3	-	TD –		
4	-	RD –		
Metal plug housing		Cable shield		

7.2.6 Preparing the device

NOTICE

Insufficient sealing of the housing!

Operational reliability of the measuring device could be compromised.

- Use suitable cable glands corresponding to the degree of protection.

1. Remove dummy plug if present.
2. If the measuring instrument is supplied without cable glands:
   Provide suitable cable gland for corresponding connecting cable.
3. If the measuring instrument is supplied with cable glands:
   Observe requirements for connecting cables .

7.3 Connecting the device

NOTICE

An incorrect connection compromises electrical safety!

- Only properly trained specialist staff may perform electrical connection work.
- Observe applicable federal/national installation codes and regulations.
- Comply with local workplace safety regulations.
- Always connect the protective ground cable ⏚ before connecting additional cables.
- When using in potentially explosive atmospheres, observe the information in the device-specific Ex documentation.

7.3.1 Connecting the transmitter

Connecting PROFINET over Ethernet-APL connector

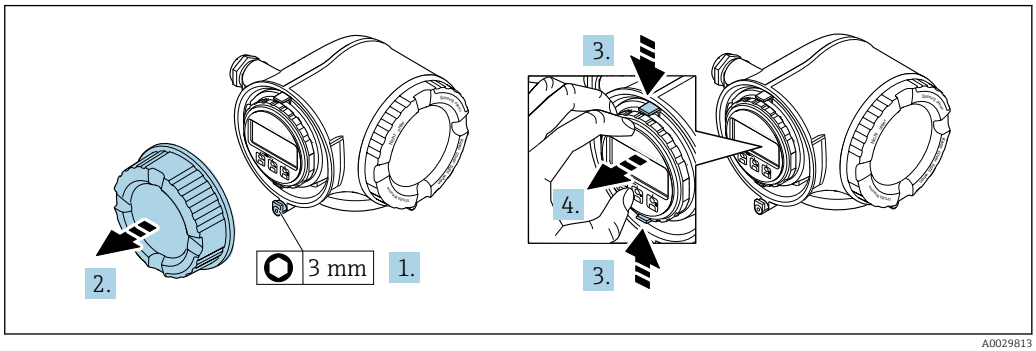

A0029813

1. Loosen the securing clamp of the connection compartment cover.
2. Unscrew the connection compartment cover.
3. Squeeze the tabs of the display module holder together.
4. Remove the display module holder.

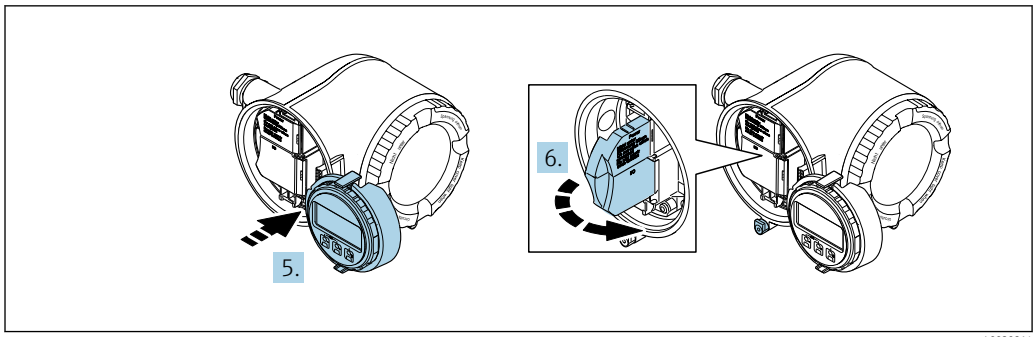

A0029814

5. Attach the holder to the edge of the electronics compartment.
6. Open the terminal cover.

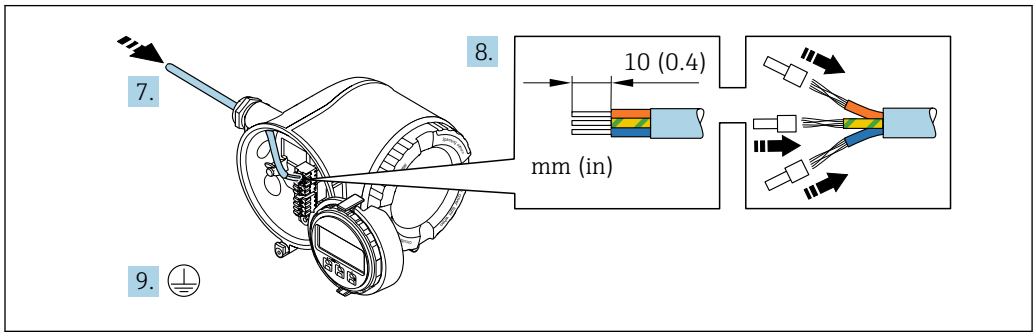

A0029815

7. Push the cable through the cable entry. To ensure tight sealing, do not remove the sealing ring from the cable entry.
8. Strip the cable and cable ends and connect to terminals 26-27. In the case of stranded cables, also fit ferrules.
9. Connect protective earth (PE).
10. Firmly tighten the cable glands.
    ↳ This concludes the connection via the APL port.

Connecting the supply voltage and additional inputs/outputs

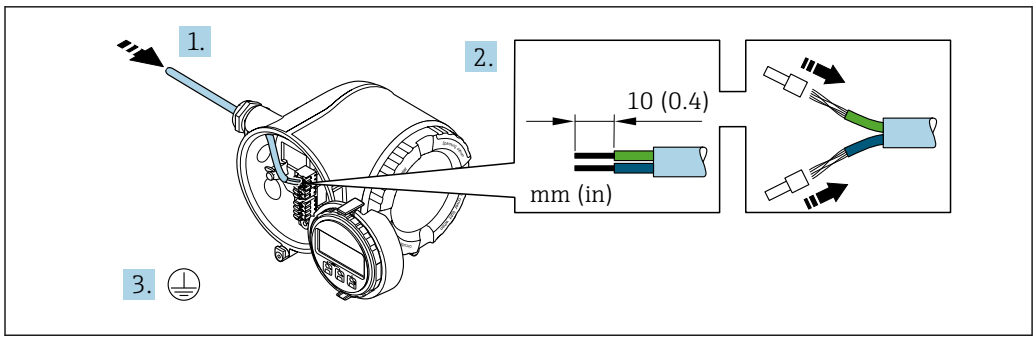

A0033983

1. Push the cable through the cable entry. To ensure tight sealing, do not remove the sealing ring from the cable entry.
2. Strip the cable and cable ends. In the case of stranded cables, also fit ferrules.
3. Connect the protective ground.

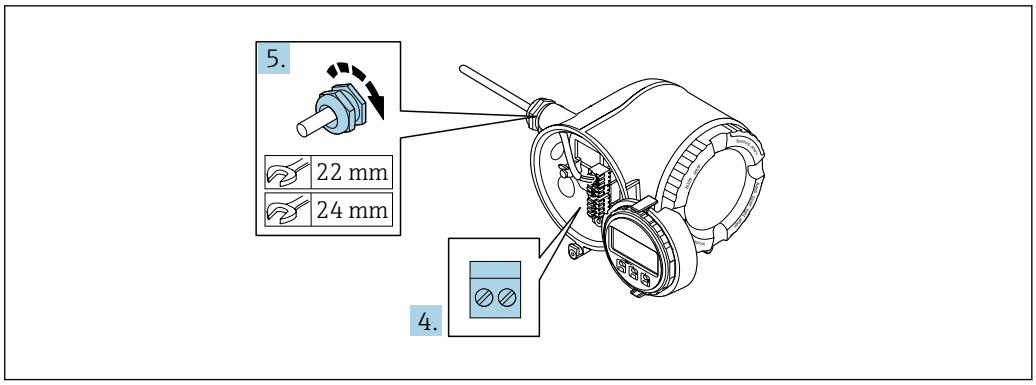

A0033984

4. Connect the cable according to the terminal assignment.
   ↳ **Signal cable terminal assignment:** The device-specific terminal assignment is documented on an adhesive label in the terminal cover.
   Supply voltage terminal assignment: Adhesive label in the terminal cover or → 📄 34.
5. Firmly tighten the cable glands.
   ↳ This concludes the cable connection process.
6. Close the terminal cover.
7. Fit the display module holder in the electronics compartment.
8. Screw on the connection compartment cover.
9. Secure the securing clamp of the connection compartment cover.

Removing a cable

To remove a cable from the terminal:

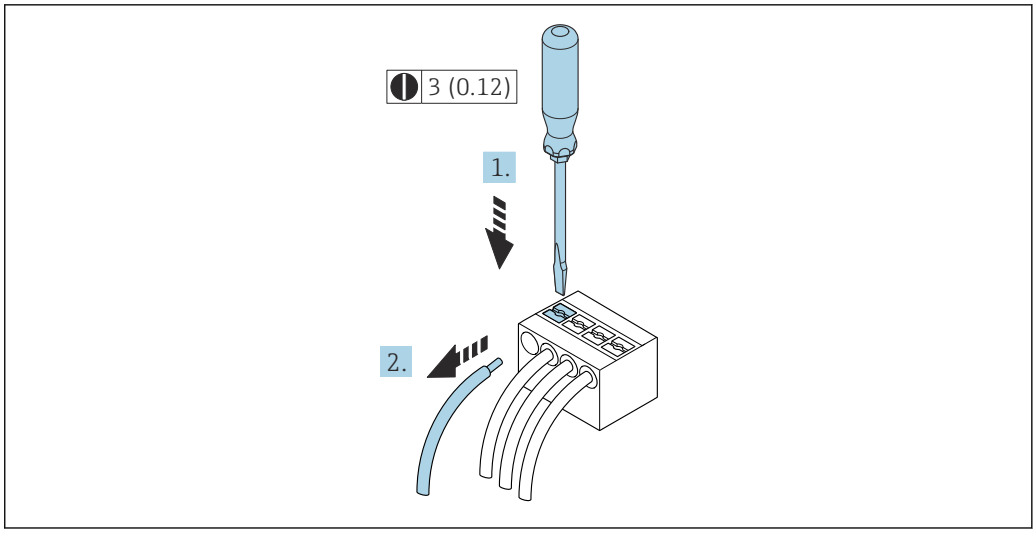

A0029598

10 Unit mm(in)

1. Use a flat-blade screwdriver to press down on the slot between the two terminal holes.
2. Remove the cable end from the terminal.

7.3.2 Integrating the transmitter into a network

This section only presents the basic options for integrating the device into a network.

For information on the procedure to follow to connect the transmitter correctly → 35.

Integrating via the service interface

The device is integrated via the connection to the service interface (CDI-RJ45).

Note the following when connecting:
- Recommended cable: CAT 5e, CAT 6 or CAT 7, with shielded connector (e.g. manufacturer YAMAICHI ; Part No Y-ConProfixPlug63 / Prod. ID: 82-006660)
- Maximum cable thickness: 6 mm
- Length of plug including anti-bend protection: 42 mm
- Bending radius: 5 x cable thickness

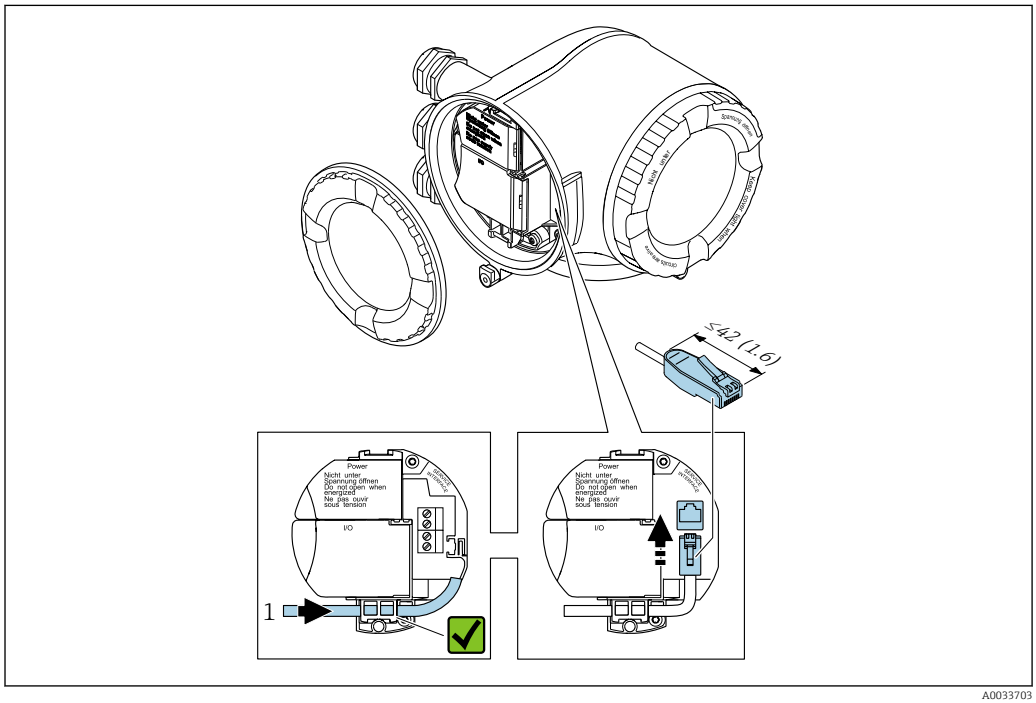

A0033703

1 Service interface (CDI-RJ45)

An adapter for the RJ45 to the M12 plug is optionally available:
Order code for "Accessories", option **NB**: "Adapter RJ45 M12 (service interface)"

The adapter connects the service interface (CDI-RJ45) to an M12 plug mounted in the cable entry. The connection to the service interface can thus be established via an M12 plug without opening the device.

Integrating into a ring topology

The device is integrated via the terminal connection for signal transmission (output 1) and the connection to the service interface (CDI-RJ45).

Note the following when connecting:
- Recommended cable: CAT5e, CAT6 or CAT7, with shielded connector (e.g. brand: YAMAICHI ; Part No. Y-ConProfixPlug63/Prod. ID: 82-006660)
- Maximum cable thickness: 6 mm
- Length of plug including anti-bend protection: 42 mm
- Bending radius: 2.5 x cable thickness

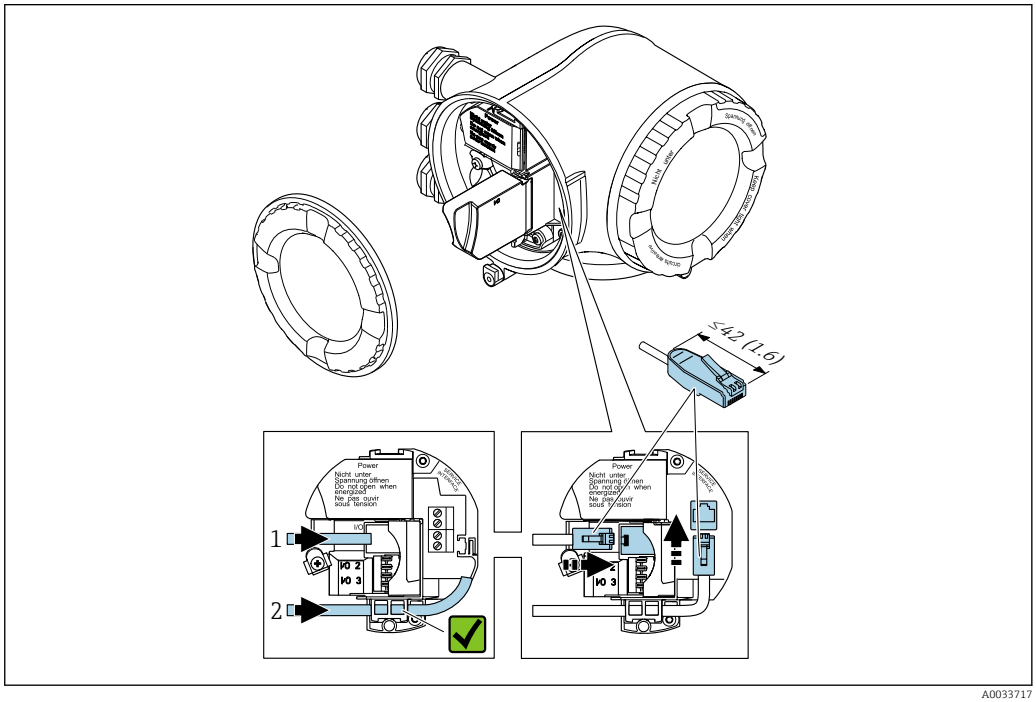

1 PROFINET connection
2 Service interface (CDI-RJ45)

An adapter for the RJ45 to the M12 plug is optionally available:
Order code for "Accessories", option **NB**: "Adapter RJ45 M12 (service interface)"

The adapter connects the service interface (CDI-RJ45) to an M12 plug mounted in the cable entry. The connection to the service interface can thus be established via an M12 plug without opening the device.

7.3.3 Connecting the remote display and operating module DKX001

The remote display and operating module DKX001 is available as an optional extra → 242..

- The measuring instrument is always supplied with a dummy cover when the remote display and operating module DKX001 is ordered directly with the measuring instrument. Display or operation at the transmitter is not possible in this case.
- If ordered subsequently, the remote display and operating module DKX001 may not be connected at the same time as the existing measuring instrument display module. Only one display or operation unit may be connected to the transmitter at any one time.

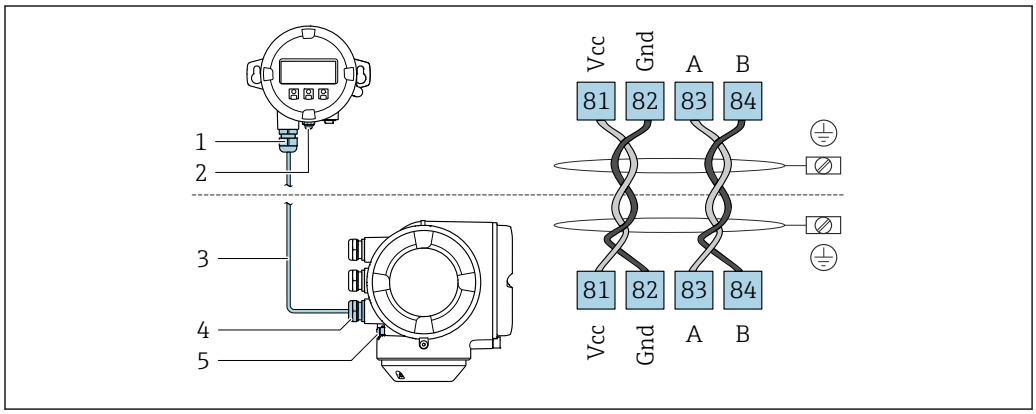

1 *Remote display and operating module DKX001*
2 *Protective ground connection (PE)*
3 *Connecting cable*
4 *Measuring instrument*
5 *Protective ground connection (PE)*

7.4 Potential equalization

7.4.1 Requirements

For potential equalization:
- Pay attention to in-house grounding concepts
- Take account of operating conditions like the pipe material and grounding
- Connect the medium, sensor and transmitter to the same electric potential
- Use a ground cable with a minimum cross-section of 6 mm^2 (10 AWG) and a cable lug for potential equalization connections

7.5 Special connection instructions

7.5.1 Connection examples

Current output 4 to 20 mA (without HART)

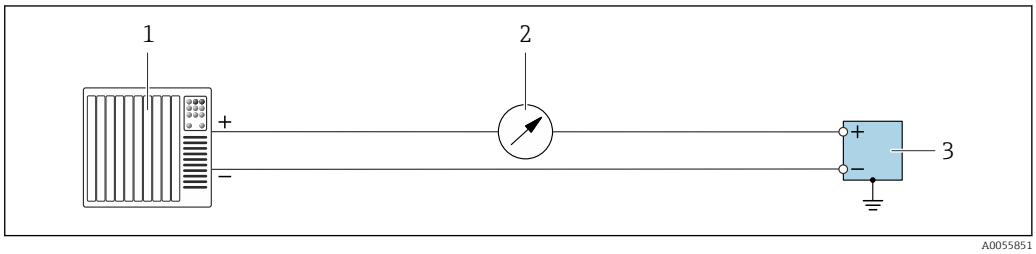

11 Connection example for 4 to 20 mA current output (active)

1 *Automation system with current input (e.g. PLC)*
2 *Optional additional display unit: Observe maximum load*
3 *Flowmeter with current output (active)*

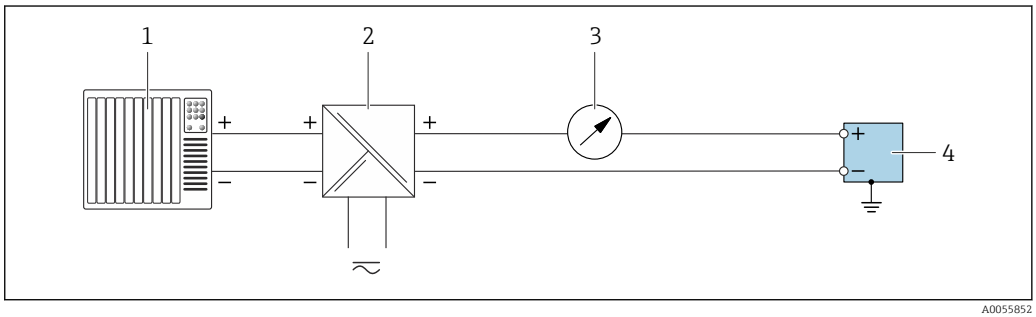

12 Connection example for 4 to 20 mA current output (passive)

1 *Automation system with current input (e.g. PLC)*
2 *Power supply*
3 *Optional additional display unit: Observe maximum load*
4 *Transmitter with current output (passive)*

Current input 4 to 20 mA

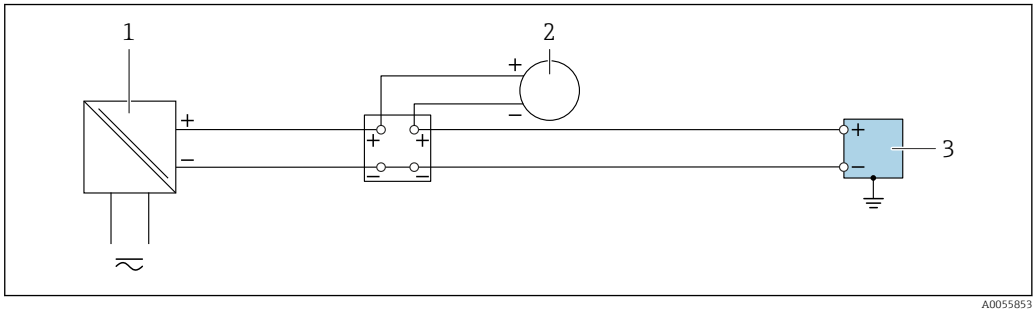

13 Connection example for 4 to 20 mA current input

1 *Power supply*
2 *External measuring instrument with 4 to 20 mA passive current output. e.g. pressure or temperature)*
3 *Transmitter with 4 to 20 mA current input*

Pulse output/frequency output/switch output

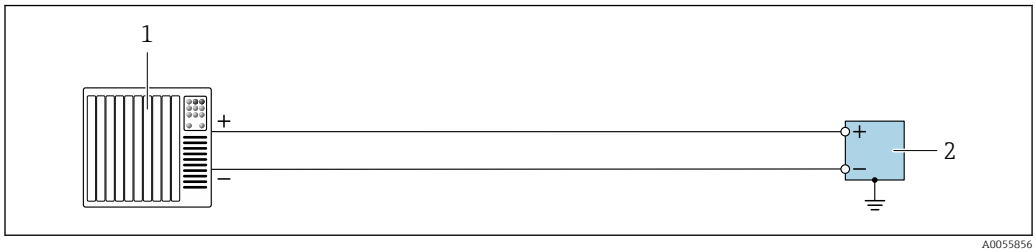

14 Connection example for pulse output/frequency output/switch output (active)

1 Automation system with pulse input/frequency input/switch input (e.g. PLC)
2 Transmitter with pulse output/frequency output/switch output (active)

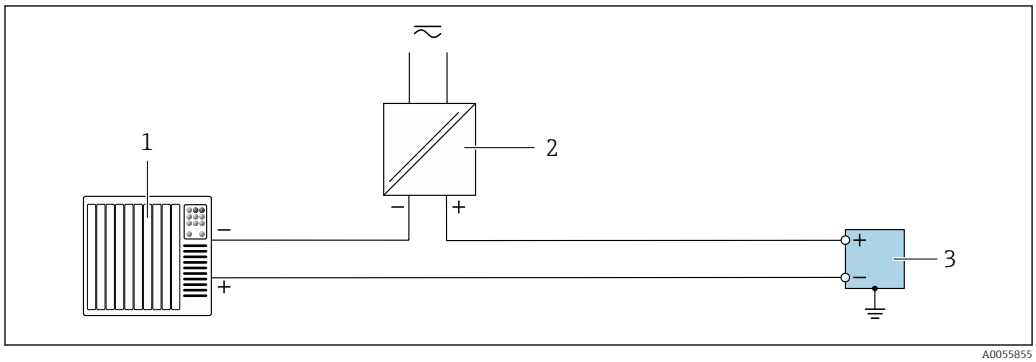

15 Connection example for pulse output/frequency output/switch output (passive)

1 Automation system with pulse input/frequency input/switch input (e.g. PLC)
2 Power supply
3 Transmitter with pulse output/frequency output/switch output (passive)

Relay output

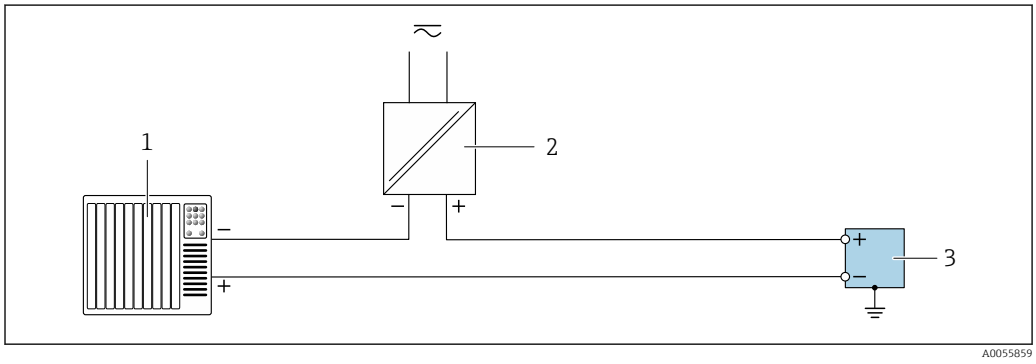

16 Connection example for relay output

1 Automation system with switch input (e.g. PLC)
2 Power supply
3 Transmitter with relay output

Status input

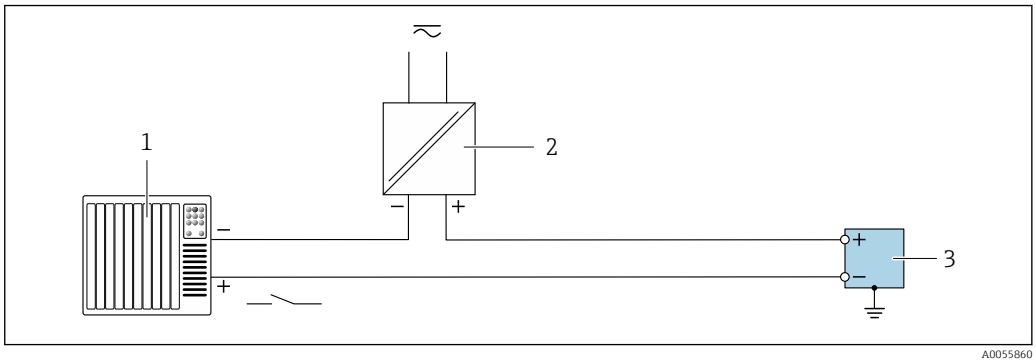

17 *Connection example for status input*

1 *Automation system with switch output passive e.g. PLC)*
2 *Power supply*
3 *Transmitter with status input*

PROFINET

See https://www.profibus.com "PROFINET Planning guideline".

7.6 Hardware settings

7.6.1 Setting the device name

A measuring point can be quickly identified within a plant on the basis of the tag name. The tag name is equivalent to the device name (name of station of the PROFINET specification). The factory-assigned device name can be changed using the DIP switches or the automation system.

Example of device name (factory setting): EH-Promass300-XXXX

EH	Endress+Hauser
Promass	Instrument family
300	Transmitter
XXXX	Serial number of the device

The device name currently used is displayed in Setup → Name of station .

Setting the device name using the DIP switches

The last part of the device name can be set using DIP switches 1-8. The address range is between 1 and 254 (factory setting: serial number of the device)

Overview of the DIP switches

DIP switch	Bit	Description
1	128	Configurable part of the device name
2	64	
3	32	
4	16	
5	8	
6	4	

DIP switch	Bit	Description
7	2	
8	1	

Example: setting the device name EH-PROMASS300-065

DIP switch	ON/OFF	Bit	Device name
1	OFF	–	
2	ON	64	
3 to 7	OFF	–	
8	ON	1	
Serial number of the device:		065	EH-PROMASS300-065

Setting the device name

Risk of electric shock when opening the transmitter housing.
- ▶ Before opening the transmitter housing:
- ▶ Disconnect the device from the power supply.

The default IP address may **not** be activated → 📄 45.

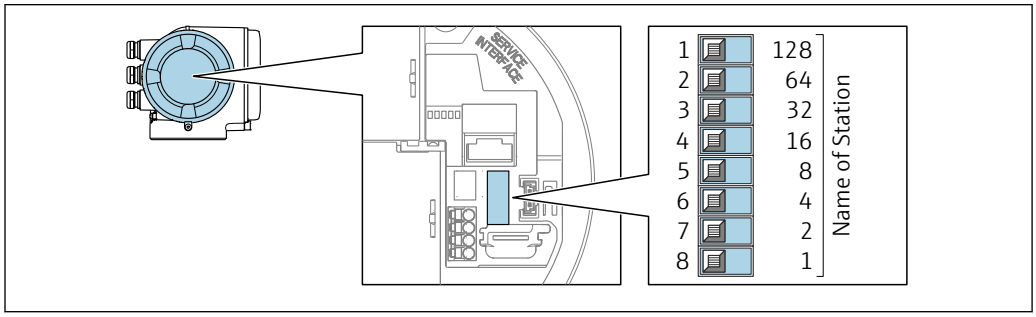

A0034498

1. Depending on the housing version, loosen the securing clamp or fixing screw of the housing cover.
2. Depending on the housing version, unscrew or open the housing cover and disconnect the local display from the main electronics module where necessary .
3. Set the desired device name using the corresponding DIP switches on the I/O electronics module.
4. Reassemble the transmitter in the reverse order.
5. Reconnect the device to the power supply.
   ↳ The configured device address is used once the device is restarted.

Setting the device name via the automation system

DIP switches 1-8 must all be set to **OFF** (factory setting) or all be set to **ON** to be able to set the device name via the automation system.

The complete device name (name of station) can be changed individually via the automation system.

- The serial number used as part of the device name in the factory setting is not saved. It is not possible to reset the device name to the factory setting with the serial number. The value "0" is used instead of the serial number.
- When assigning the device name via the automation system: assign the device name in lower case letters.

7.6.2 Activating the default IP address

Activating the default IP address by DIP switch

Risk of electric shock when opening the transmitter housing.
- ▶ Before opening the transmitter housing:
- ▶ Disconnect the device from the power supply.

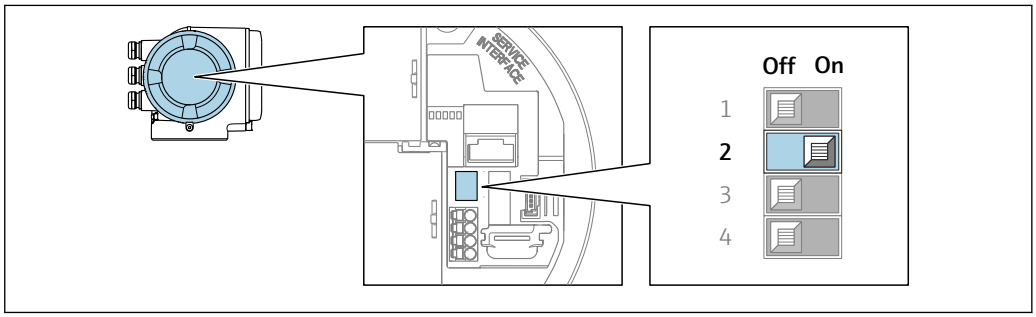

A0034499

1. Depending on the housing version, loosen the securing clamp or fixing screw of the housing cover.
2. Depending on the housing version, unscrew or open the housing cover and disconnect the local display from the main electronics module where necessary .
3. DIP switch no. 2 on the I/O electronics module from **OFF** → **ON**.
4. Reassemble the transmitter in the reverse order.
5. Reconnect the device to the power supply.
   ↳ The default IP address is used once the device is restarted.

7.7 Ensuring the degree of protection

The measuring instrument fulfills all the requirements for the degree of protection IP66/67, Type 4X enclosure.

To ensure degree of protection IP66/67, Type 4X enclosure, carry out the following steps after making the electrical connection:

1. Check that the housing seals are clean and fitted correctly.
2. Dry, clean or replace the seals if necessary.
3. Tighten all housing screws and screw covers.
4. Firmly tighten the cable glands.

5. To ensure that moisture does not enter the cable entry:
Route the cable so that it loops down before the cable entry ("water trap").

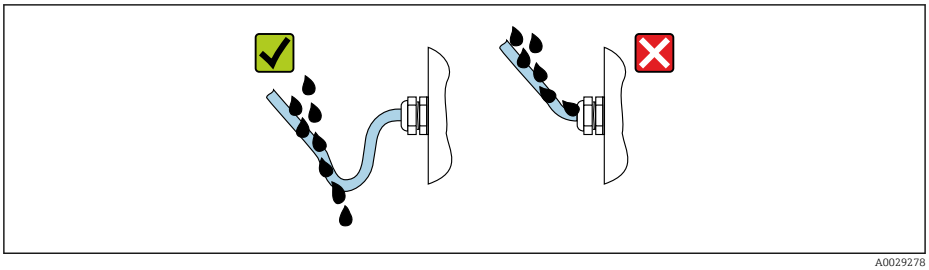

A0029278

6. The supplied cable glands and plastic dummy plugs used for the threaded cable entries do not ensure degree of protection IP66/67, Type 4X enclosure. To achieve this degree of protection, cable glands and plastic dummy plugs that are not used must be replaced by threaded dummy plugs with the degree of protection IP66/67, Type 4X enclosure.

7.8 Post-connection check

Are the device and cable undamaged (visual inspection)?	❑
Is the protective earthing established correctly?	❑
Do the cables used meet the requirements ?	❑
Are the mounted cables strain-relieved and fixed securely in place?	❑
Are all cable glands installed, securely tightened and leak-tight? Cable run with "water trap" → 🗎 45?	❑
Is the terminal assignment correct ?	❑
If supply voltage is present: Does anything appear on the display module screen?	❑
Are dummy plugs inserted in unused cable entries and have transportation plugs been replaced with dummy plugs?	❑

8 Operation options

8.1 Overview of operation options

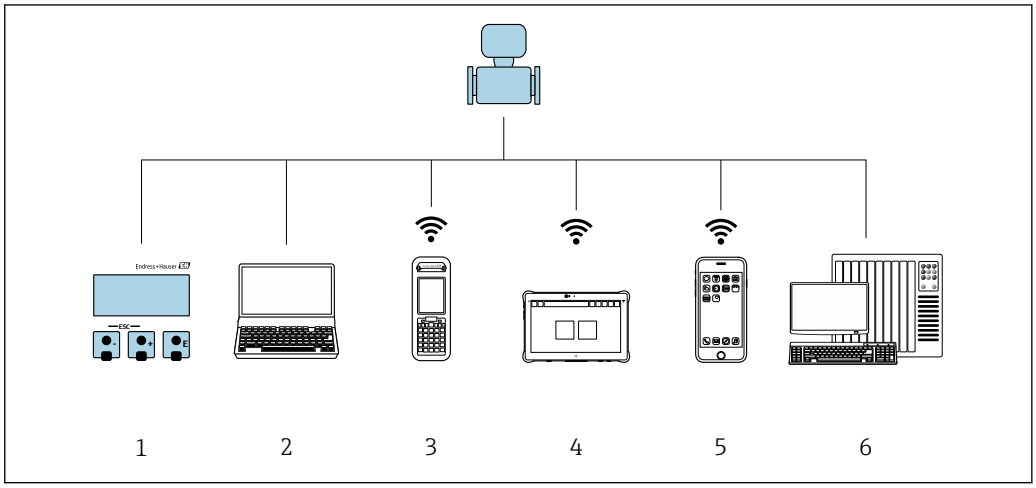

A0034513

1 *Local operation via display module*
2 *Computer with web browser or operating tool (e.g. FieldCare, DeviceCare, AMS Device Manager, SIMATIC PDM)*
3 *Field Xpert SFX350 or SFX370*
4 *Field Xpert SMT70*
5 *Mobile handheld terminal*
6 *Automation system (e.g. PLC)*

8.2 Structure and function of the operating menu

8.2.1 Structure of the operating menu

For an overview of the operating menu for experts: see the "Description of Device Parameters" document supplied with the device → 274

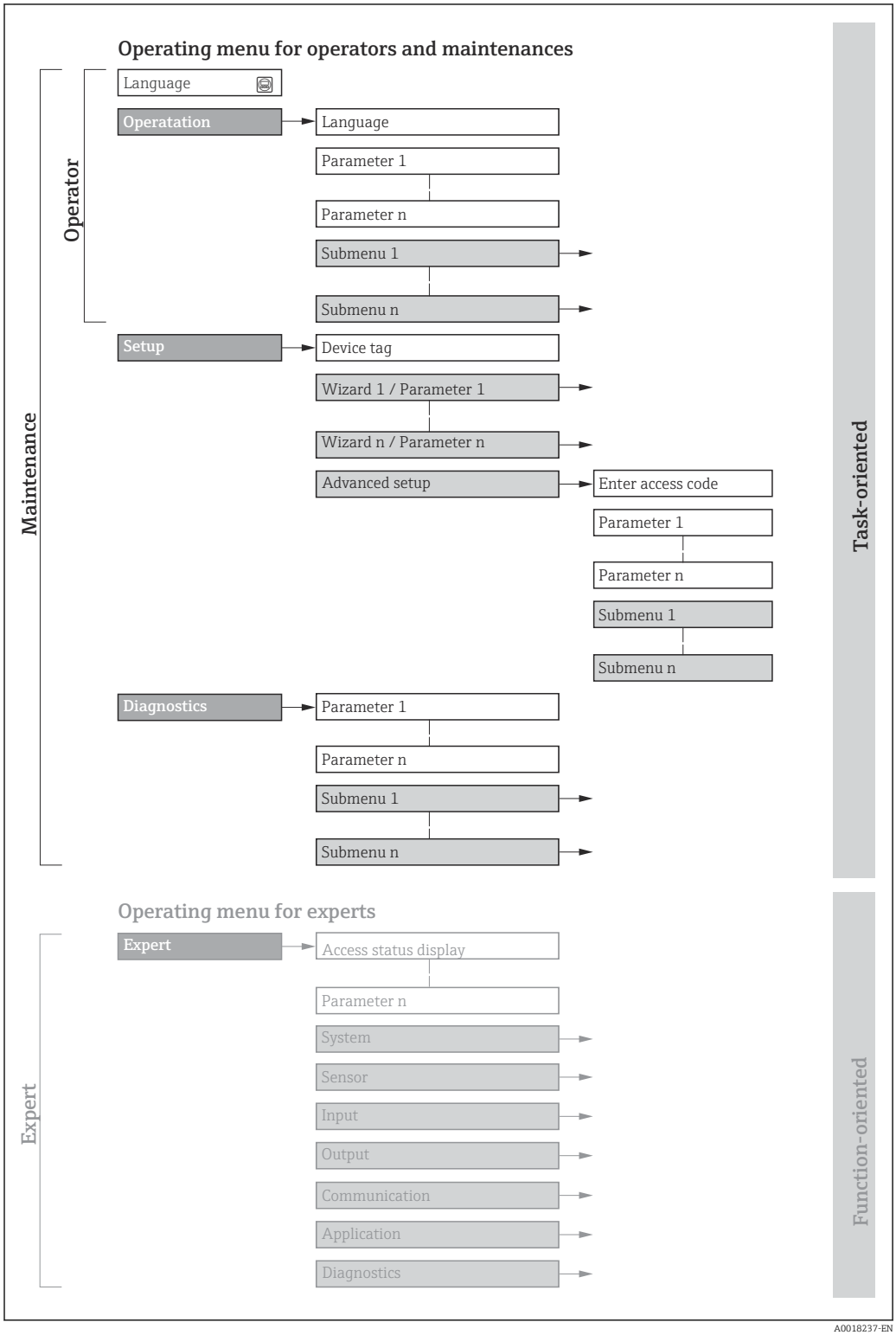

18 *Schematic structure of the operating menu*

8.2.2 Operating philosophy

The individual parts of the operating menu are assigned to certain user roles (e.g. operator, maintenance etc.). Each user role contains typical tasks within the device life cycle.

For custody transfer, once the device has been put into circulation or sealed, its operation is restricted.

Menu/parameter		User role and tasks	Content/meaning
Language	Task-oriented	**Role "Operator", "Maintenance"** Tasks during operation: ▪ Configuring the operational display ▪ Reading measured values	Defining the operating language
Operation			▪ Defining the operating language ▪ Defining the web server operating language ▪ Resetting and controlling totalizers ▪ Configuring the operational display (e.g. display format, display contrast) ▪ Resetting and controlling totalizers
Setup		**"Maintenance" role** Commissioning: ▪ Configuring the measurement ▪ Configuring the inputs and outputs ▪ Configuring the communication interface	Wizard for quick commissioning: ▪ Configuring the system units ▪ Configuring the communication interface ▪ Defining the medium ▪ Displaying the I/O configuration ▪ Configuring the inputs ▪ Configuring the outputs ▪ Configuring the operational display ▪ Configuring the low flow cut off ▪ Configuring the detection of partially filled and empty pipes Advanced setup ▪ For more customized configuration of the measurement (adaptation to special measuring conditions) ▪ Calculated process variables ▪ Sensor adjustment ▪ Configuring totalizers ▪ Configuring the display ▪ Configuring the WLAN settings ▪ Data backup ▪ Administration (define access code, reset measuring instrument)
Diagnostics		**"Maintenance" role** Troubleshooting: ▪ Diagnostics and elimination of process and device errors ▪ Measured value simulation	Contains all parameters for error detection and analyzing process and device errors: ▪ Diagnostic list Contains up to 5 currently pending diagnostic messages. ▪ Event logbook Contains event messages that have occurred. ▪ Device information Contains information for identifying the device. ▪ Measured values Contains all current measured values. ▪ **Data logging** submenu with the "Extended HistoROM" order option Storage and visualization of measured values ▪ Heartbeat Technology The functionality of the device is checked on demand and the verification results are documented. ▪ Simulation Used to simulate measured values or output values. ▪ Testpoints

Menu/parameter		User role and tasks	Content/meaning
Expert	Function-oriented	Tasks that require detailed knowledge of the function of the device: ▪ Commissioning measurements under difficult conditions ▪ Optimal adaptation of the measurement to difficult conditions ▪ Detailed configuration of the communication interface ▪ Error diagnostics in difficult cases	Contains all the parameters of the device and makes it possible to access these parameters directly using an access code. The structure of this menu is based on the function blocks of the device: ▪ System Contains all higher-level device parameters that do not affect measurement or measured value communication. ▪ Sensor Configuring the measurement. ▪ Input Configuring the status input. ▪ Output Configuring the analog current outputs as well as the pulse/frequency and switch output. ▪ Communication Configuring the digital communication interface and the web server. ▪ Application Configuring the functions that go beyond the actual measurement (e.g. totalizer). ▪ Diagnostics Error detection and analysis of process and device errors and for device simulation and the Heartbeat Technology menu.

8.3 Access to operating menu via local display

8.3.1 Operational display

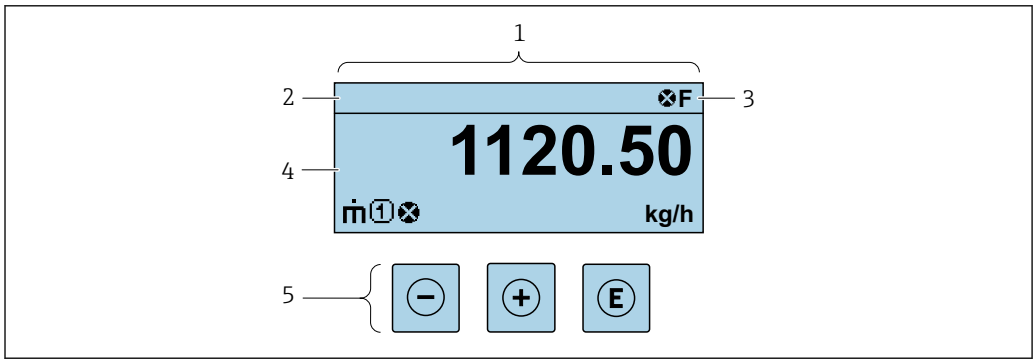

1 *Operational display*
2 *Tag name*
3 *Status area*
4 *Display area for measured values (up to 4 lines)*
5 *Operating elements* → 🗎 *56*

Status area

The following symbols appear in the status area of the operational display at the top right:
- Status signals→ 🗎 174
  - **F**: Failure
  - **C**: Function check
  - **S**: Out of specification
  - **M**: Maintenance required
- Diagnostic behavior→ 🗎 175
  - ⊗: Alarm
  - ⚠: Warning
- 🔒: Locking (the device is locked via the hardware)
- ⇆: Communication (communication via remote operation is active)

Display area

In the display area, each measured value is prefaced by certain symbol types for further description:

Measured variables

Symbol	Meaning
$\dot{m}$	Mass flow
$\dot{V}$	▪ Volume flow ▪ Corrected volume flow
ρ	▪ Density ▪ Reference density
🌡	Temperature

The number and display format of the measured variables can be configured via the **Format display** parameter (→ 118).

Totalizer

Symbol	Meaning
Σ	Totalizer The measurement channel number indicates which of the three totalizers is displayed.

Input

Symbol	Meaning
	Status input

Measurement channel numbers

Symbol	Meaning
1 ... 4	Measurement channel 1 to 4 The measurement channel number is displayed only if more than one channel is present for the same measured variable type (e.g. Totalizer 1 to 3).

Diagnostic behavior

Symbol	Meaning
	Alarm ▪ Measurement is interrupted. ▪ Signal outputs and totalizers assume the defined alarm condition. ▪ A diagnostic message is generated.
⚠	**Warning** ▪ Measurement is resumed. ▪ The signal outputs and totalizers are not affected. ▪ A diagnostic message is generated.

The diagnostic behavior pertains to a diagnostic event that is relevant to the displayed measured variable.

8.3.2 Navigation view

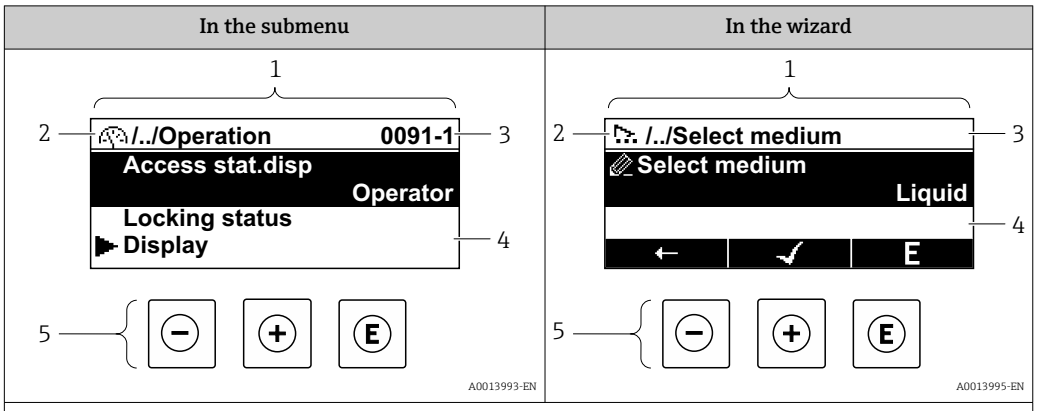

1 *Navigation view*
2 *Navigation path to current position*
3 *Status area*
4 *Display area for navigation*
5 *Operating elements* → 📄 *56*

Navigation path

The navigation path to the current position is displayed at the top left in the navigation view and consists of the following elements:
- The display symbol for the menu/submenu (▶) or the wizard (🧙).
- An omission symbol (/ ../) for operating menu levels in between.
- Name of the current submenu, wizard or parameter

	Display symbol	Omission symbol	Parameter
	↓	↓	↓
Example	▶	/ ../	Indication

For more information about the icons in the menu, refer to the "Display area" section → 📄 52

Status area

The following appears in the status area of the navigation view in the top right corner:
- In the submenu
  - The direct access code to the parameter (e.g., 0022-1)
  - If a diagnostic event is present, the diagnostic behavior and status signal
- In the wizard
  If a diagnostic event is present, the diagnostic behavior and status signal

- For information on the diagnostic behavior and status signal → 📄 174
- For information on the function and entry of the direct access code → 📄 58

Display area

Menus

Symbol	Meaning
	Operation Is displayed: ▪ In the menu next to the "Operation" selection ▪ At the left in the navigation path in the **Operation** menu

	Setup Is displayed: ▪ In the menu next to the "Setup" selection ▪ At the left in the navigation path in the **Setup** menu
	Diagnosis Is displayed: ▪ In the menu next to the "Diagnostics" selection ▪ At the left in the navigation path in the **Diagnostics** menu
	Expert Is displayed: ▪ In the menu next to the "Expert" selection ▪ At the left in the navigation path in the **Expert** menu

Submenus, wizards, parameters

Symbol	Meaning
	Submenu
	Wizards
	Parameters within a wizard No display symbol exists for parameters in submenus.

Locking procedure

Symbol	Meaning
	Parameter locked When displayed in front of a parameter name, indicates that the parameter is locked. ▪ By a user-specific access code ▪ By the hardware write protection switch

Wizards

Symbol	Meaning
	Switches to the previous parameter.
	Confirms the parameter value and switches to the next parameter.
E	Opens the editing view of the parameter.

8.3.3 Editing view

Numeric editor

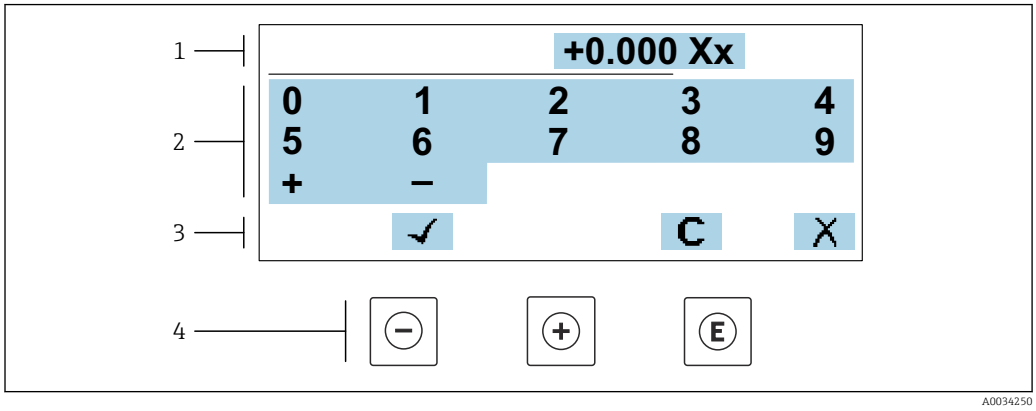

19 *For entering values in parameters (e.g. limit values)*

1 *Entry display area*
2 *Input screen*
3 *Confirm, delete or reject entry*
4 *Operating elements*

Text editor

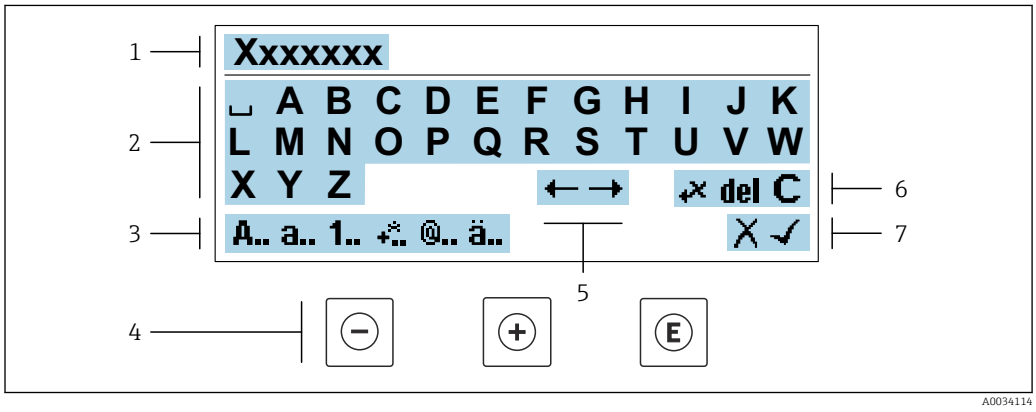

20 *For entering text in parameters (e.g. device tag)*

1 *Entry display area*
2 *Current input screen*
3 *Change input screen*
4 *Operating elements*
5 *Move entry position*
6 *Delete entry*
7 *Reject or confirm entry*

Using the operating elements in the editing view

Operating key	Meaning
⊖	**Minus key** Move the entry position to the left.
⊕	**Plus key** Move the entry position to the right.

Operating key	Meaning
Ⓔ	**Enter key** ▪ Pressing the key briefly confirms your selection. ▪ Pressing the key for 2 s confirms your entry.
⊖ + ⊕	**Escape key combination (press keys simultaneously)** Close the editing view without accepting a change.

Input screens

Symbol	Meaning
A..	Upper case
a..	Lower case
1..	Numbers
+..	Punctuation marks and special characters: = + – * / ² ³ ¼ ½ ¾ ( ) [ ] < > { }
@..	Punctuation marks and special characters: ' " ` ^ . , ; : ? ! % µ ° € $ £ ¥ § @ # / \ I ~ & _
ä..	Umlauts and accents

Controlling data entries

Symbol	Meaning
←→	Move entry position
✗	Reject entry
✓	Confirm entry
←✗	Delete character immediately to the left of the entry position
del	Delete character immediately to the right of the entry position
C	Clear all the characters entered

8.3.4 Operating elements

Operating key	Meaning
⊖	**Minus key** *In menu, submenu* Moves the selection bar upwards in a picklist *In wizards* Goes to previous parameter *In the text and numeric editor* Move the entry position to the left.
⊕	**Plus key** *In menu, submenu* Moves the selection bar downwards in a picklist *In wizards* Goes to the next parameter *In the text and numeric editor* Move the entry position to the right.

E	**Enter key**
	In the operational display
	Pressing the key briefly opens the operating menu.
	In menu, submenu
	▪ Pressing the key briefly:
	  ▪ Opens the selected menu, submenu or parameter.
	  ▪ Starts the wizard.
	  ▪ If help text is open, closes the help text of the parameter.
	▪ Pressing the key for 2 s in a parameter:
	  If present, opens the help text for the function of the parameter.
	In wizards
	Opens the editing view of the parameter and confirms the parameter value
	In the text and numeric editor
	▪ Pressing the key briefly confirms your selection.
	▪ Pressing the key for 2 s confirms your entry.

⊖ + ⊕	**Escape key combination (press keys simultaneously)**
	In menu, submenu
	▪ Pressing the key briefly:
	  ▪ Exits the current menu level and takes you to the next higher level.
	  ▪ If help text is open, closes the help text of the parameter.
	▪ Pressing the key for 2 s returns you to the operational display ("home position").
	In wizards
	Exits the wizard and takes you to the next higher level
	In the text and numeric editor
	Exits the Editing view without applying the changes.

⊖ + E	**Minus/Enter key combination (press and hold down the keys simultaneously)**
	▪ If keypad lock is active:
	  Pressing the key for 3 s deactivates the keypad lock.
	▪ If keypad lock is not active:
	  Pressing the key for 3 s opens the context menu including the option for activating the keypad lock.

8.3.5 Opening the context menu

Using the context menu, the user can call up the following menus quickly and directly from the operational display:

- Setup
- Data backup
- Simulation

Calling up and closing the context menu

The user is in the operational display.

1. Press the ⊟ and Ⓔ keys for longer than 3 seconds.
   ↳ The context menu opens.

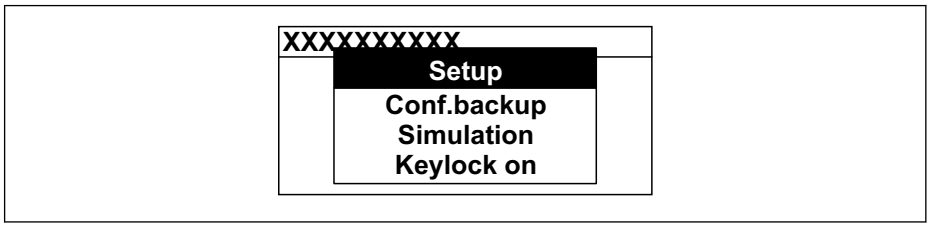

A0034608-EN

2. Press ⊟ + ⊞ simultaneously.
   ↳ The context menu is closed and the operational display appears.

Calling up the menu via the context menu

1. Open the context menu.
2. Press ⊞ to navigate to the desired menu.
3. Press Ⓔ to confirm the selection.
   ↳ The selected menu opens.

8.3.6 Navigating and selecting from list

Different operating elements are used to navigate through the operating menu. The navigation path is displayed on the left in the header. Icons are displayed in front of the individual menus. These icons are also shown in the header during navigation.

For an explanation of the navigation view with symbols and operating elements → 52

Example: Setting the number of displayed measured values to "2 values"

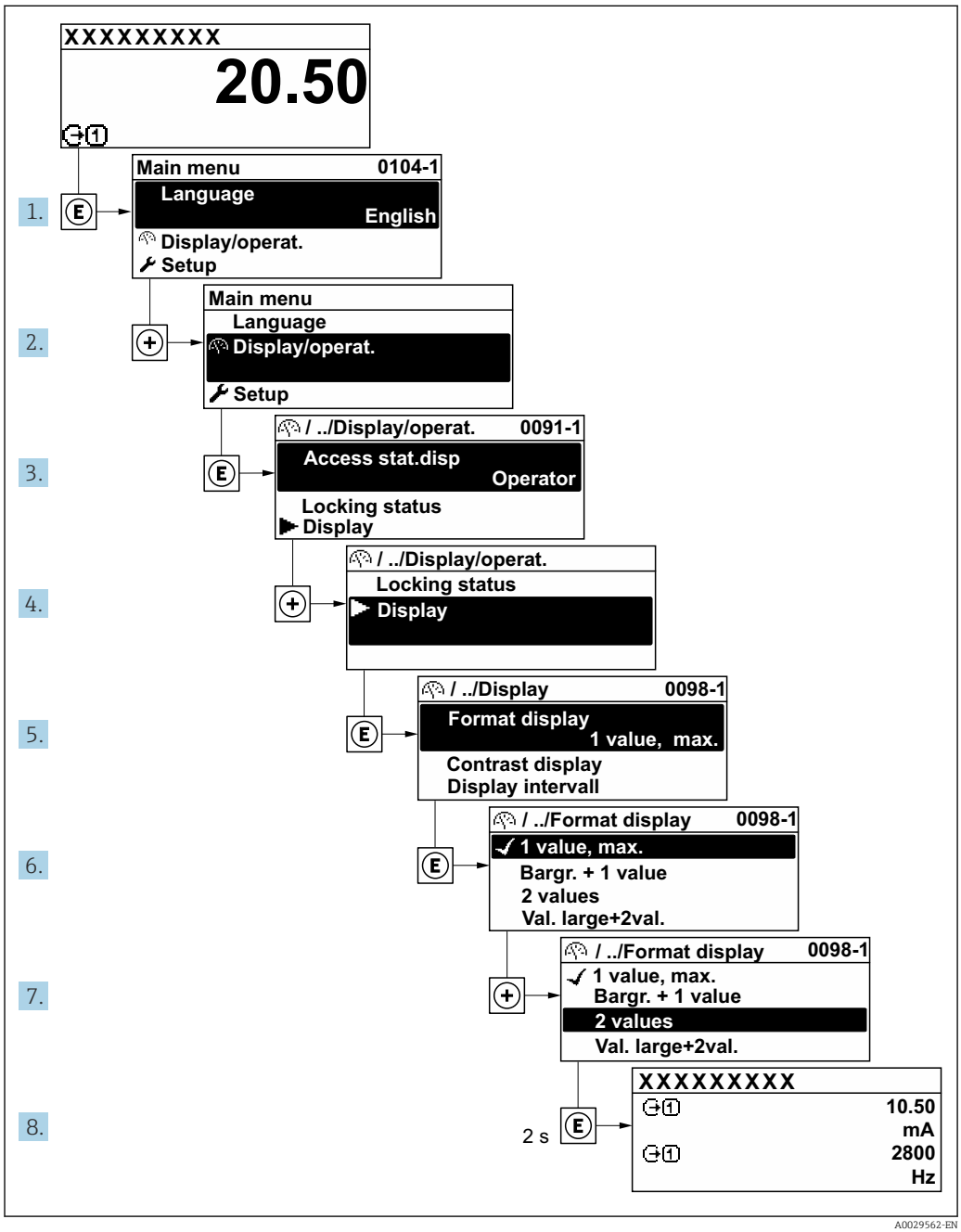

8.3.7 Calling the parameter directly

A parameter number is assigned to every parameter to be able to access a parameter directly via the onsite display. Entering this access code in the **Direct access** parameter calls up the desired parameter directly.

Navigation path
Expert → Direct access

The direct access code consists of a 5-digit number (at maximum) and the channel number, which identifies the channel of a process variable: e.g. 00914-2. In the navigation view, this appears on the right-hand side in the header of the selected parameter.

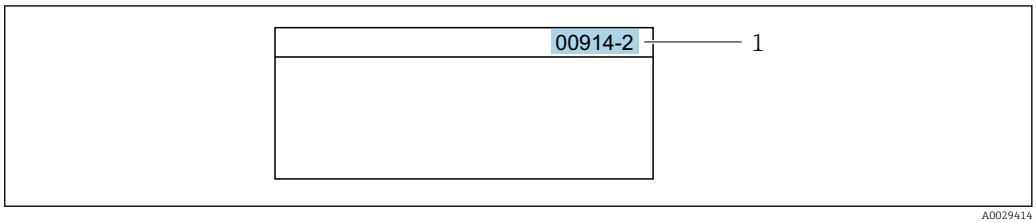

1 Direct access code

Note the following when entering the direct access code:
- The leading zeros in the direct access code do not have to be entered.
  Example: Enter **"914"** instead of **"00914"**
- If no channel number is entered, channel 1 is opened automatically.
  Example: Enter **00914** → **Assign process variable** parameter
- If a different channel is opened: Enter the direct access code with the corresponding channel number.
  Example: Enter **00914-2** → **Assign process variable** parameter

For the direct access codes of the individual parameters, see the "Description of Device Parameters" document for the device

8.3.8 Calling up help text

Help text is available for some parameters and can be called up from the navigation view. The help text provides a brief explanation of the parameter function and thereby supports swift and safe commissioning.

Calling up and closing the help text

The user is in the navigation view and the selection bar is on a parameter.

1. Press E for 2 s.
   ↳ The help text for the selected parameter opens.

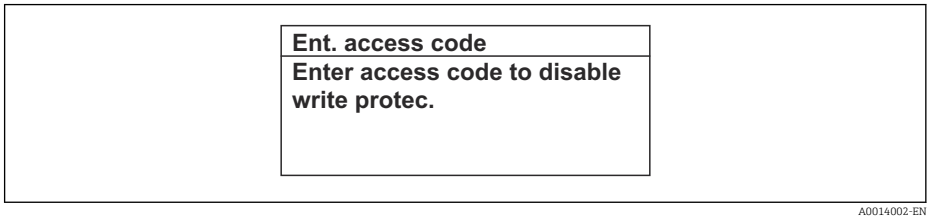

21 Example: Help text for parameter "Enter access code"

2. Press − + + simultaneously.
   ↳ The help text is closed.

8.3.9 Changing the parameters

Parameters can be changed via the numeric editor or text editor.
- Numeric editor: Change values in a parameter, e.g. specifications for limit values.
- Text editor: Enter text in a parameter, e.g. tag name.

A message is displayed if the value entered is outside the permitted value range.

Ent. access code
Invalid or out of range input value Min:0 Max:9999

A0014049-EN

For a description of the editing view - consisting of the text editor and numeric editor - with symbols → 54, for a description of the operating elements → 56

8.3.10 User roles and related access authorization

The two user roles "Operator" and "Maintenance" have different write access to the parameters if the customer defines a user-specific access code. This protects the device configuration via the local display from unauthorized access → 144.

Defining access authorization for user roles

An access code is not yet defined when the device is delivered from the factory. Access authorization (read and write access) to the device is not restricted and corresponds to the "Maintenance" user role.

- Define the access code.
  - The "Operator" user role is redefined in addition to the "Maintenance" user role. Access authorization differs for the two user roles.

Access authorization to parameters: "Maintenance" user role

Access code status	Read access	Write access
An access code has not yet been defined (factory setting).	✔	✔
After an access code has been defined.	✔	✔ [1]

1) The user only has write access after entering the access code.

Access authorization to parameters: "Operator" user role

Access code status	Read access	Write access
After an access code has been defined.	✔	– [1]

1) Despite the defined access code, certain parameters can always be modified and thus are excluded from the write protection as they do not affect the measurement: write protection via access code → 144

The user role with which the user is currently logged on is indicated by the **Access status** parameter. Navigation path: Operation → Access status

8.3.11 Disabling write protection via access code

If the 🔒-symbol appears on the local display in front of a parameter, the parameter is write-protected by a user-specific access code and its value cannot be changed at the moment using local operation → 144.

Parameter write protection via local operation can be disabled by entering the user-specific access code in the **Enter access code** parameter (→ 124) via the respective access option.

1. After you press E, the input prompt for the access code appears.

2. Enter the access code.
   ↳ The 🔒-symbol in front of the parameters disappears; all previously write-protected parameters are now re-enabled.

8.3.12 Enabling and disabling the keypad lock

The keypad lock makes it possible to block access to the entire operating menu via local operation. As a result, it is no longer possible to navigate through the operating menu or change the values of individual parameters. Users can only read the measured values on the operational display.

The keypad lock is switched on and off via the context menu.

Switching on the keypad lock

The keypad lock is switched on automatically:
- If the device has not been operated via the display for > 1 minute.
- Each time the device is restarted.

To activate the keylock manually:

1. The device is in the measured value display.
   Press the ⊟ and E keys for 3 seconds.
   ↳ A context menu appears.
2. In the context menu select the **Keylock on** option.
   ↳ The keypad lock is switched on.

If the user attempts to access the operating menu while the keypad lock is active, the **Keylock on** message appears.

Switching off the keypad lock

- The keypad lock is switched on.
  Press the ⊟ and E keys for 3 seconds.
  ↳ The keypad lock is switched off.

8.4 Access to operating menu via web browser

8.4.1 Function range

The integrated web server can be used to operate and configure the device via a web browser via service interface (CDI-RJ45) or via WLAN interface . The structure of the operating menu is the same as for the local display. In addition to the measured values, status information on the device is displayed and can be used to monitor device health. Furthermore the device data can be managed and the network parameters can be configured.

A device that has a WLAN interface (can be ordered as an option) is required for the WLAN connection: order code for "Display; Operation", option G "4-line, illuminated; touch control + WLAN". The device acts as an Access Point and enables communication by computer or a mobile handheld terminal.

For additional information on the web server, see the Special Documentation for the device. → 📄 275

8.4.2 Requirements

Computer hardware

Hardware	Interface	
	RJ45	WLAN
Interface	The computer must have a RJ45 interface. [1]	The operating unit must have a WLAN interface.
Connection	Standard Ethernet cable	Connection via wireless local area network.
Screen	Recommended size: ≥12" (depends on the screen resolution)	

1) Recommended cable: CAT5e, CAT6 or CAT7, with shielded plug (e.g. YAMAICHI product; part no. Y-ConProfixPlug63/Prod. ID: 82-006660)

Computer software

Software	Interface	
	RJ45	WLAN
Recommended operating systems	▪ Microsoft Windows 8 or higher. ▪ Mobile operating systems: ▪ iOS ▪ Android Microsoft Windows XP and Windows 7 is supported.	
Web browsers supported	▪ Microsoft Edge ▪ Mozilla Firefox ▪ Google Chrome ▪ Safari	

Computer settings

Settings	Interface	
	RJ45	WLAN
User rights	Appropriate user rights (e.g. administrator rights) for TCP/IP and proxy server settings are necessary (e.g. for adjusting the IP address, subnet mask etc.).	
Proxy server settings of the web browser	The web browser's *Use a Proxy Server for Your LAN* setting must be **deselected** .	
JavaScript	JavaScript must be enabled. If JavaScript cannot be enabled: Enter http://192.168.1.212/servlet/basic.html in the address bar of the web browser. A fully functional but simplified version of the operating menu structure starts in the web browser. When installing a new firmware version: To enable correct data display, clear the temporary memory (cache) under **Internet options** in the web browser.	JavaScript must be enabled. The WLAN display requires JavaScript support.
Network connections	Use only the active network connections for the measuring instrument.	
	Switch off all other network connections such as WLAN for example.	Switch off all other network connections.

In the event of connection problems: → 171

Measuring device: Via CDI-RJ45 service interface

Device	CDI-RJ45 service interface
Measuring device	The measuring device has an RJ45 interface.
Web server	Web server must be enabled; factory setting: ON For information on enabling the Web server → 67

Measuring device: via WLAN interface

Device	WLAN interface
Measuring device	The measuring device has a WLAN antenna: ▪ Transmitter with integrated WLAN antenna ▪ Transmitter with external WLAN antenna
Web server	Web server and WLAN must be enabled; factory setting: ON For information on enabling the Web server → 67

8.4.3 Connecting the device

Via service interface (CDI-RJ45)

Preparing the measuring device

1. Depending on the housing version:
   Loosen the securing clamp or fixing screw of the housing cover.
2. Depending on the housing version:
   Unscrew or open the housing cover.
3. Connect the computer to the RJ45 plug via the standard Ethernet connecting cable..

Configuring the Internet protocol of the computer

The IP address can be assigned to the measuring device in a variety of ways:
- Dynamic Configuration Protocol (DCP), factory setting:
  The IP address is automatically assigned to the measuring device by the automation system (e.g. Siemens S7).
- Hardware addressing:
  The IP address is set via DIP switches .
- Software addressing:
  The IP address is entered via the **IP address** parameter (→ 92) .
- DIP switch for "Default IP address":
  To establish the network connection via the service interface (CDI-RJ45): the fixed IP address 192.168.1.212 is used .

The device works with the Dynamic Configuration Protocol (DCP) ex-works, i.e. the IP address of the measuring device is automatically assigned by the automation system (e.g. Siemens S7).

To establish a network connection via the service interface (CDI-RJ45): set the "Default IP address" DIP switch to **ON**. The measuring device then has the fixed IP address: 192.168.1.212. The fixed IP address 192.168.1.212 can now be used to establish the connection to the network.

1. Via DIP switch 2, activate the default IP address 192.168.1.212: .
2. Switch on the measuring device.
3. Connect the computer to the RJ45 plug via the standard Ethernet cable → 70.

4. If a 2nd network card is not used, close all the applications on the notebook.
   ↳ Applications requiring Internet or a network, such as e-mail, SAP applications, Internet or Windows Explorer.
5. Close any open Internet browsers.
6. Configure the properties of the Internet protocol (TCP/IP) as defined in the table:

IP address	192.168.1.XXX; for XXX all numerical sequences except: 0, 212 and 255 → e.g. 192.168.1.213
Subnet mask	255.255.255.0
Default gateway	192.168.1.212 or leave cells empty

Via WLAN interface

Configuring the Internet protocol of the mobile device

NOTICE

If the WLAN connection is lost during the configuration, settings made may be lost.

- Make sure that the WLAN connection is not disconnected while configuring the device.

NOTICE

Please note the following to avoid a network conflict:

- Avoid accessing the measuring instrument simultaneously from the same mobile device via the service interface (CDI-RJ45) and the WLAN interface.
- Only activate one service interface (CDI-RJ45 or WLAN interface).
- If simultaneous communication is necessary: configure different IP address ranges, e.g. 192.168.0.1 (WLAN interface) and 192.168.1.212 (CDI-RJ45 service interface).

Preparing the mobile terminal

- Enable WLAN on the mobile terminal.

Establishing a WLAN connection from the mobile terminal to the measuring device

1. In the WLAN settings of the mobile terminal:
   Select the measuring device using the SSID (e.g. EH_Promass_300_A802000).
2. If necessary, select the WPA2 encryption method.
3. Enter the password:
   Serial number of the measuring device ex-works (e.g. L100A802000).
   ↳ The LED on the display module flashes. It is now possible to operate the measuring device with the web browser, FieldCare or DeviceCare.

The serial number can be found on the nameplate.

To ensure the safe and swift assignment of the WLAN network to the measuring point, it is advisable to change the SSID name. It should be possible to clearly assign the new SSID name to the measuring point (e.g. tag name) because it is displayed as the WLAN network.

Terminating the WLAN connection

- After configuring the device:
  Terminate the WLAN connection between the mobile terminal and measuring device.

Starting the web browser

1. Start the web browser on the computer.

2. Enter the IP address of the web server in the address line of the web browser: 192.168.1.212
   ↳ The login page appears.

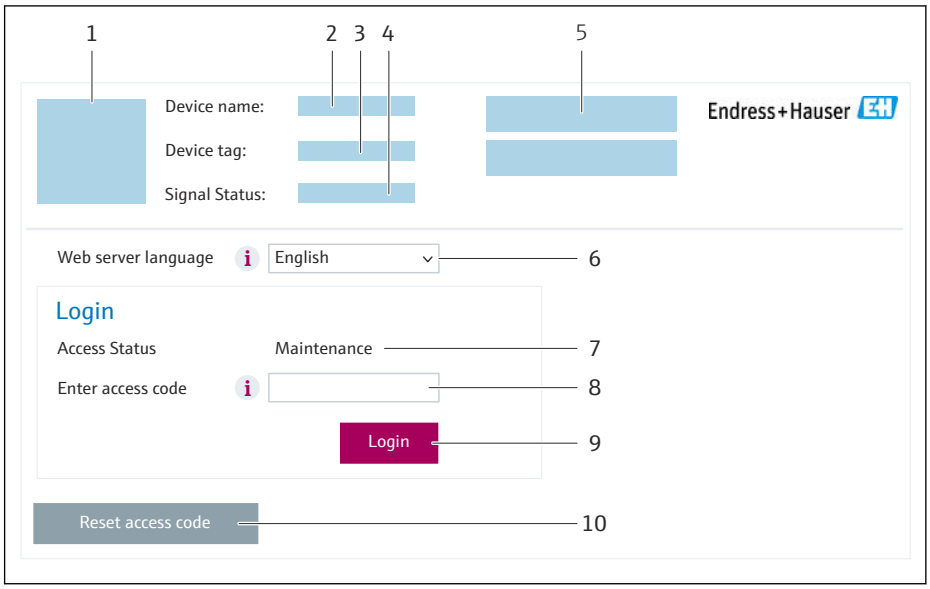

A0053670

1 *Picture of device*
2 *Device name*
3 *Device tag*
4 *Status signal*
5 *Current measured values*
6 *Operating language*
7 *User role*
8 *Access code*
9 *Login*
10 *Reset access code (→ 🗎 140)*

If a login page does not appear, or if the page is incomplete → 🗎 171

8.4.4 Logging on

1. Select the preferred operating language for the Web browser.
2. Enter the user-specific access code.
3. Press **OK** to confirm your entry.

Access code	0000 (factory setting); can be changed by customer

If no action is performed for 10 minutes, the Web browser automatically returns to the login page.

8.4.5 User interface

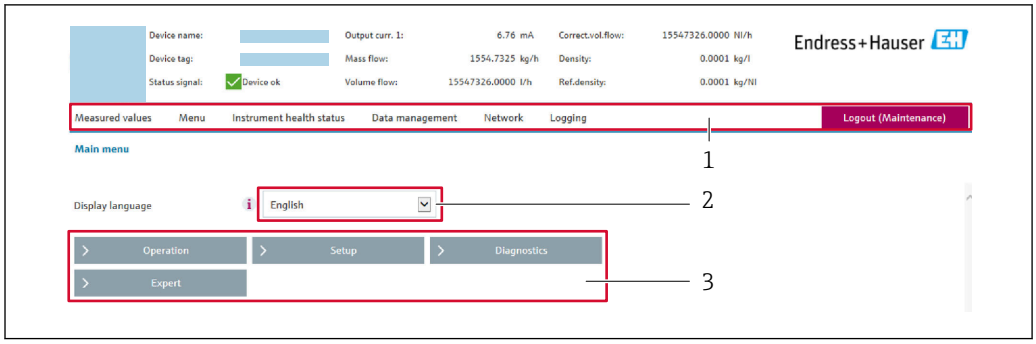

A0029418

1 *Function row*
2 *Local display language*
3 *Navigation area*

Header

The following information appears in the header:
- Device name
- Device tag
- Device status with status signal → 📄 177
- Current measured values

Function row

Functions	Meaning
Measured values	Displays the measured values of the measuring instrument
Menu	▪ Access to the operating menu from the measuring instrument ▪ The structure of the operating menu is the same as for the local display 📖 Detailed information on the "Description of Device Parameters" operating menu
Device status	Displays the diagnostic messages currently pending, listed in order of priority

Data management	Data exchange between computer and measuring instrument:
	▪ Device configuration:
	  ▪ Load settings from the device (XML format, save configuration)
	  ▪ Save settings to the device (XML format, restore configuration)
	▪ Logbook - Export Event logbook (.csv file)
	▪ Documents - Export documents:
	  ▪ Export backup data record (.csv file, create documentation of the measuring point configuration)
	  ▪ Verification report (PDF file, only available with the "Heartbeat Verification" application package)
	▪ File for system integration - If using fieldbuses, upload device drivers for system integration from the measuring instrument: PROFINET: GSD file
	▪ Firmware update - Flashing a firmware version

Network	Configuration and checking of all the parameters required for establishing the connection to the measuring instrument: ▪ Network settings (e.g. IP address, MAC address) ▪ Device information (e.g. serial number, firmware version)
Logout	End the operation and call up the login page

Navigation area

The menus, the associated submenus and parameters can be selected in the navigation area.

Working area

Depending on the selected function and the related submenus, various actions can be performed in this area:
- Configuring parameters
- Reading measured values
- Calling up help text
- Starting an upload/download

8.4.6 Disabling the Web server

The Web server of the measuring device can be switched on and off as required using the **Web server functionality** parameter.

Navigation

"Expert" menu → Communication → Web server

Parameter overview with brief description

Parameter	Description	Selection
Web server functionality	Switch the Web server on and off.	▪ Off ▪ HTML Off ▪ On

Function scope of the "Web server functionality" parameter

Option	Description
Off	▪ The Web server is completely disabled. ▪ Port 80 is locked.
HTML Off	The HTML version of the Web server is not available.
On	▪ The complete Web server functionality is available. ▪ JavaScript is used. ▪ The password is transferred in an encrypted state. ▪ Any change to the password is also transferred in an encrypted state.

Enabling the Web server

If the Web server is disabled it can only be re-enabled with the **Web server functionality** parameter via the following operating options:
- Via local display
- Via Bedientool "FieldCare"
- Via "DeviceCare" operating tool

8.4.7 Logging out

Before logging out, perform a data backup via the **Data management** function (upload configuration from device) if necessary.

1. Select the **Logout** entry in the function row.
   ↳ The home page with the Login box appears.
2. Close the Web browser.

3. If no longer needed:
   Reset the modified properties of the Internet protocol (TCP/IP) → 📄 63.

If communication with the web server was established via the default IP address 192.168.1.212, DIP switch no. 10 must be reset (from **ON** → **OFF**). Afterwards, the IP address of the device is active again for network communication.

8.5 Operation via SmartBlue app

The device can be operated and configured with the SmartBlue App.

- The SmartBlue app must be downloaded onto a mobile device for this purpose
- For information on the compatibility of the SmartBlue app with mobile devices, see **Apple App Store (iOS devices)** or **Google Play Store (Android devices)**
- Incorrect operation by unauthorized persons is prevented by means of encrypted communication and password encryption.
- The Bluetooth® function can be deactivated after initial device setup.

ANDROID APP ON Google Play

Download on the App Store

A0033202

22 QR code for free Endress+Hauser SmartBlue App

Download and installation:

1. Scan the QR code or enter **SmartBlue** in the search field of the Apple App Store (iOS) or Google Play Store (Android).
2. Install and start the SmartBlue app.
3. For Android devices: enable location tracking (GPS) (not required for iOS devices).
4. Select a device that is ready to receive from the device list displayed.

Login:

1. Enter the user name: admin
2. Enter the initial password: serial number of the device
3. Change the password after logging in for the first time

Information on password and reset code

For devices that meet the requirements of IEC 62443-4-1 "Secure product developement lifecycle management" ("ProtectBlue"):
- If the user-defined password is lost: refer to the user management instructions and the reset button in the operating manual.
- Refer to the associated Security Manual (SD).

For all other devices (without "ProtectBlue"):
- If the user-defined password is lost, access can be restored via a reset code. The reset code is the serial number of the device in reverse. The original password is once again valid after the reset code has been entered.
- The reset code can also be changed in addition to the password.
- If the user-defined reset code is lost, the password can no longer be reset via the SmartBlue app. Contact Endress+Hauser Service in this case.

8.6 Access to the operating menu via the operating tool

The structure of the operating menu in the operating tools is the same as for operation via the local display.

8.6.1 Connecting the operating tool

Via PROFINET network

This communication interface is available in device versions with PROFINET.

Star topology

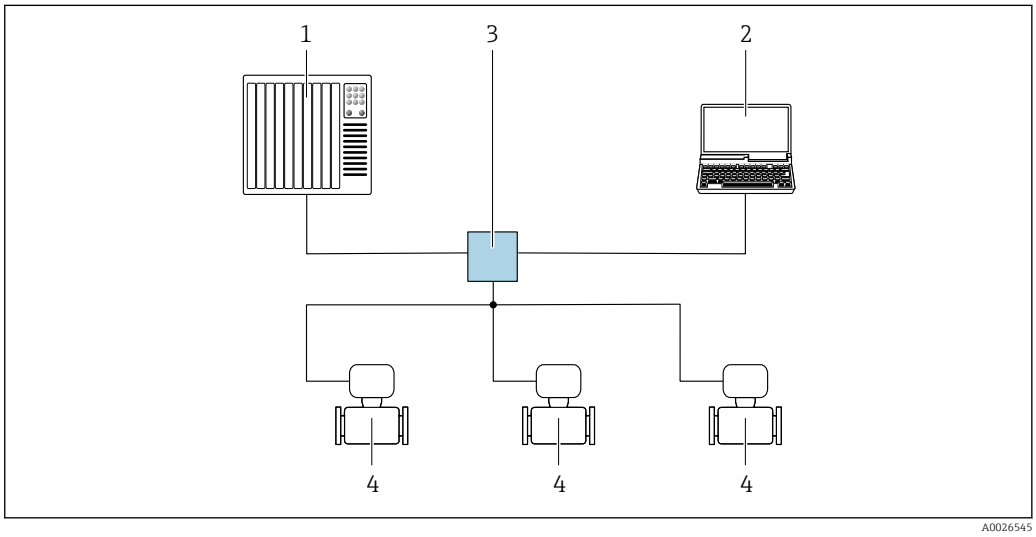

23 Options for remote operation via PROFINET network: star topology

1 *Automation system, e.g. Simatic S7 (Siemens)*
2 *Computer with web browser for accessing integrated web server or computer with operating tool (e.g. FieldCare, DeviceCare, SIMATIC PDM) with COM DTM "CDI Communication TCP/IP"*
3 *Standard Ethernet switch, e.g. Scalance X204 (Siemens)*
4 *Measuring instrument*

Ring topology

The device is integrated via the terminal connection for signal transmission (output 1) and the service interface (CDI-RJ45).

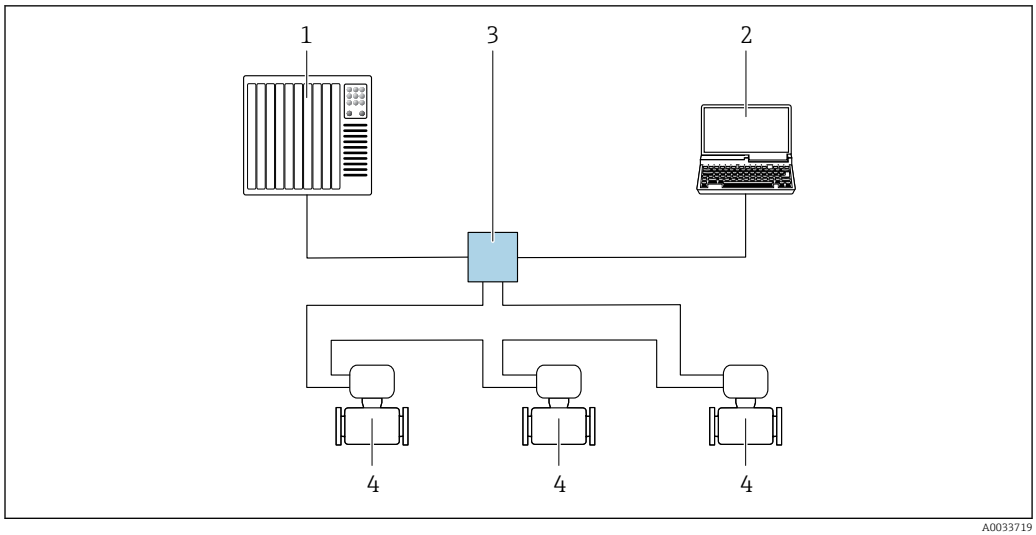

24 *Options for remote operation via PROFINET network: ring topology*

1 *Automation system, e.g., Simatic S7 (Siemens)*
2 *Computer with web browser for accessing integrated web server or computer with operating tool (e.g. FieldCare, DeviceCare, SIMATIC PDM) with COM DTM "CDI Communication TCP/IP"*
3 *Standard Ethernet switch, e.g. Scalance X204 (Siemens)*
4 *Measuring instrument*

Service interface

Via service interface (CDI-RJ45)

To configure the device on site, a point-to-point connection can be established. Alternatively, a connection via Modbus TCP can be used.The connection is made with the housing open, directly via the device's service interface (CDI-RJ45).

An adapter for the RJ45 to the M12 connector is optionally available for the non-hazardous area:

Order code for "Accessories", option **NB**: "Adapter RJ45 M12 (service interface)"

The adapter connects the service interface (CDI-RJ45) to an M12 connector mounted in the cable entry. The connection to the service interface can be established via an M12 connector without opening the device.

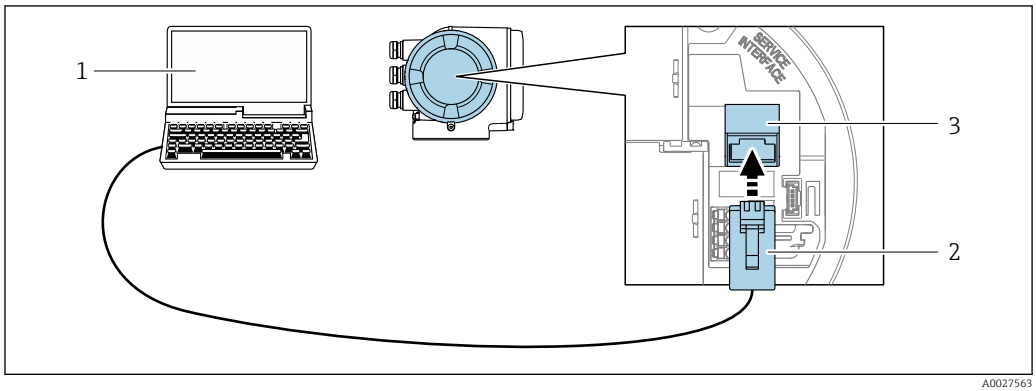

25 *Connection via service interface (CDI-RJ45)*

1 *Computer with web browser for accessing the integrated web server or computer with operating tool, e.g. "FieldCare", "DeviceCare", with COM DTM "CDI Communication TCP/IP" or Modbus DTM*
2 *Standard Ethernet connecting cable with RJ45 connector*
3 *Service interface (CDI-RJ45) of the measuring instrument with access to the integrated web server*

Via WLAN interface

The optional WLAN interface is available on the following device version:
Order code for "Display; operation", option G "4-line, illuminated; touch control + WLAN"

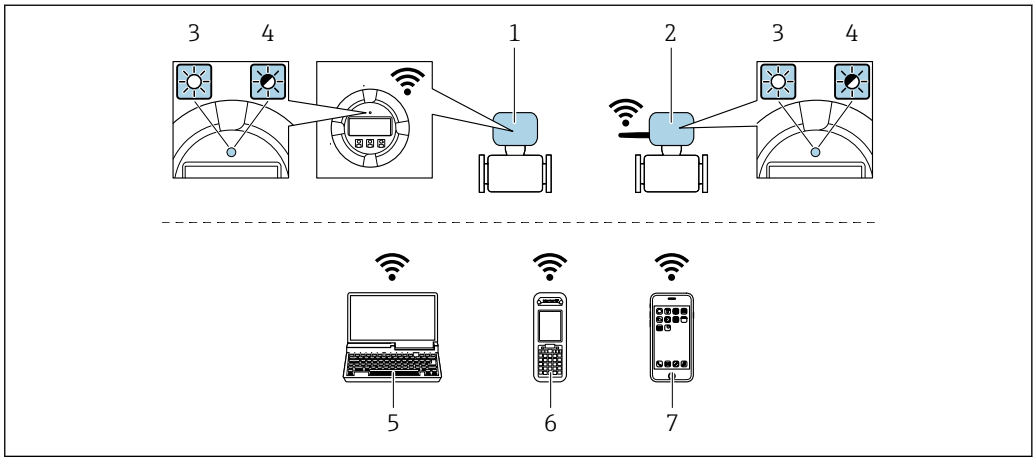

A0034570

1 *Transmitter with integrated WLAN antenna*
2 *Transmitter with external WLAN antenna*
3 *LED lit constantly: WLAN reception is enabled on measuring instrument*
4 *LED flashing: WLAN connection established between operating unit and measuring instrument*
5 *Computer with WLAN interface and web browser for accessing integrated device web server or with operating tool e.g FieldCare, DeviceCare)*
6 *Mobile handheld terminal with WLAN interface and web browser for accessing integrated device web server or operating tool (e.g. FieldCare, DeviceCare)*
7 *Smartphone or tablet (e.g. Field Xpert SMT70)*

Function	WLAN: IEEE 802.11 b/g (2.4 GHz)
Encryption	WPA2-PSK AES-128 (in accordance with IEEE 802.11i)
Configurable WLAN channels	1 to 11
Degree of protection	IP66/67
Available antennas	▪ Internal antenna ▪ External antenna (optional) In the event of poor transmission/reception conditions at the place of installation. Only 1 antenna is active at any one time!
Range	▪ Internal antenna: typically 10 m (32 ft) ▪ External antenna: typically 50 m (164 ft)
Materials (external antenna)	▪ Antenna: ASA plastic (acrylonitrile styrene acrylate) and nickel-plated brass ▪ Adapter: Stainless steel and nickel-plated brass ▪ Cable: Polyethylene ▪ Plug: Nickel-plated brass ▪ Angle bracket: Stainless steel

Configuring the Internet protocol of the mobile device

NOTICE

If the WLAN connection is lost during the configuration, settings made may be lost.

▶ Make sure that the WLAN connection is not disconnected while configuring the device.

NOTICE

Please note the following to avoid a network conflict:

- Avoid accessing the measuring instrument simultaneously from the same mobile device via the service interface (CDI-RJ45) and the WLAN interface.
- Only activate one service interface (CDI-RJ45 or WLAN interface).
- If simultaneous communication is necessary: configure different IP address ranges, e.g. 192.168.0.1 (WLAN interface) and 192.168.1.212 (CDI-RJ45 service interface).

Preparing the mobile terminal

- Enable WLAN on the mobile terminal.

Establishing a WLAN connection from the mobile terminal to the measuring device

1. In the WLAN settings of the mobile terminal:
   Select the measuring device using the SSID (e.g. EH_Promass_300_A802000).
2. If necessary, select the WPA2 encryption method.
3. Enter the password:
   Serial number of the measuring device ex-works (e.g. L100A802000).
   ↳ The LED on the display module flashes. It is now possible to operate the measuring device with the web browser, FieldCare or DeviceCare.

The serial number can be found on the nameplate.

To ensure the safe and swift assignment of the WLAN network to the measuring point, it is advisable to change the SSID name. It should be possible to clearly assign the new SSID name to the measuring point (e.g. tag name) because it is displayed as the WLAN network.

Terminating the WLAN connection

- After configuring the device:
  Terminate the WLAN connection between the mobile terminal and measuring device.

8.6.2 FieldCare

Function range

FDT-based (Field Device Technology) plant asset management tool from Endress+Hauser. It can configure all smart field units in a system and helps you manage them. By using the status information, it is also a simple but effective way of checking their status and condition.

Access is via:
- CDI-RJ45 service interface → 📄 70
- WLAN interface → 📄 71

Typical functions:
- Transmitter parameter configuration
- Loading and saving of device data (upload/download)
- Documentation of the measuring point
- Visualization of the measured value memory (line recorder) and event logbook

- Operating Instructions BA00027S
- Operating Instructions BA00059S

Source for device description files → 📄 74

8.6.3 DeviceCare

Function range

Tool for connecting and configuring Endress+Hauser field devices.

The fastest way to configure Endress+Hauser field devices is with the dedicated "DeviceCare" tool. Together with the device type managers (DTMs) it presents a convenient, comprehensive solution.

Innovation brochure IN01047S

Source for device description files → 74

9 System integration

9.1 Overview of device description files

9.1.1 Current version data for the device

Firmware version	01.01.zz	▪ On the title page of the manual ▪ On the transmitter nameplate ▪ Firmware version Diagnostics → Device information → Firmware version
Release date of firmware version	07.2019	–
Manufacturer ID	0x11	Manufacturer ID Diagnostics → Device information → Manufacturer ID
Device ID	0x843B	Device ID Expert → Communication → PROFINET configuration → PROFINET information → Device ID
Device type ID	Promass 300	Device Type Expert → Communication → PROFINET configuration → PROFINET information → Device Type
Device revision	2	Device revision Expert → Communication → PROFINET configuration → PROFINET information → Device revision
PROFINET version	2.3.x	–

For an overview of the various firmware versions for the device → 📄 238

9.1.2 Operating tools

The suitable device description file for the individual operating tools is listed in the table below, along with information on where the file can be acquired.

Operating tool via Service interface (CDI-RJ45)	Sources for obtaining device descriptions
FieldCare	▪ www.endress.com → Downloads area ▪ USB stick (contact Endress+Hauser) ▪ E-mail → Downloads area
DeviceCare	▪ www.endress.com → Downloads area ▪ E-mail → Downloads area

9.2 Device master file (GSD)

In order to integrate field devices into a bus system, the PROFIBUS system needs a description of the device parameters, such as output data, input data, data format and data volume.

These data are available in the device master file (GSD) which is provided to the automation system when the communication system is commissioned. In addition device bit maps, which appear as icons in the network structure, can also be integrated.

The device master file (GSD) is in XML format, and the file is created in the GSDML description markup language.

With the PA Profile 4.02 device master file (GSD) it is possible to exchange field devices made by different manufacturers without having to reconfigure.

Two different device master files (GSD) can be used: Manufacturer-specific GSD and PA Profile GSD.

9.2.1 File name of the manufacturer-specific device master file (GSD)

Example of the name of a device master file:

GSDML-V2.3.x-EH-PROMASS 300-yyyymmdd.xml

GSDML	Description language
V2.3.x	Version of the PROFINET specification
EH	Endress+Hauser
PROMASS	Instrument family
300	Transmitter
yyyymmdd	Date of issue (yyyy: year, mm: month, dd: day)
.xml	File name extension (XML file)

9.2.2 File name of the PA Profile device master file (GSD)

9.3 Cyclic data transmission

9.3.1 Overview of the modules

The following tables shows which modules are available to the measuring device for cyclic data exchange. Cyclic data exchange is performed with an automation system.

Measuring device		Direction Data flow	Control system
Modules	Slot		
Analog Input module → 📄 76	1 to 14, 24 to 26, 27	→	PROFINET
Application-specific Input module → 📄 78	31, 32	→	
Digital Input module → 📄 78	1 to 14	→	
Diagnose Input module → 📄 79	1 to 14	→	
Analog Output module → 📄 81	18, 19, 20, 29, 30	←	
Digital Output module → 📄 83	21, 22, 24 to 26	←	
Totalizer 1 to 3 → 📄 80	15 to 17	← →	
Heartbeat Verification module → 📄 83	23	← →	
Concentration → 📄 84	28	← →	

9.3.2 Description of the modules

The data structure is described from the perspective of the automation system:
- Input data: Are sent from the measuring device to the automation system.
- Output data: Are sent from the automation system to the measuring device.

Analog Input module

Transmit input variables from the measuring device to the automation system.

Analog Input modules cyclically transmit the selected input variables, along with the status, from the measuring device to the automation system. The input variable is depicted in the first four bytes in the form of a floating point number as per the IEEE 754 standard. The fifth byte contains status information pertaining to the input variable.

Selection: input variable

Slot	Input variables
1 to 14	▪ Mass flow ▪ Volume flow ▪ Corrected volume flow ▪ Density ▪ Reference density ▪ Temperature ▪ Electronic temperature ▪ Oscillation frequency ▪ Frequency fluctuation ▪ Oscillation damping ▪ Tube damping fluctuation ▪ Signal asymmetry ▪ Exciter current ▪ Application-specific output 0 ▪ Application-specific output 1 ▪ Index inhomogeneous medium ▪ Index suspended bubbles
24 to 26	Current input value
1 to 14	**Additional input variables with the Heartbeat Verification application package** ▪ Carrier pipe temperature ▪ Oscillation damping 1 ▪ Oscillation frequency 1 ▪ Oscillation amplitude 0 ▪ Oscillation amplitude 1 ▪ Frequency fluctuation 1 ▪ Tube damping fluctuation 1 ▪ Exciter current 1 ▪ HBSI
1 to 14, 27	**Additional input variables with the Concentration Measurement application package** ▪ Concentration (slot 1 to 14) ▪ Target mass flow (slot 1 to 14) ▪ Carrier mass flow (slot 1 to 14) ▪ Concentration value (slot 27)
1 to 14	**Additional input variables with the Petroleum application package** ▪ Oil density ▪ Water density ▪ Water cut % ▪ Oil mass flow ▪ Water mass flow ▪ Oil volume flow ▪ Water volume flow ▪ Oil corrected volume flow ▪ Water corrected volume flow ▪ Replacement reference density ▪ Gross corrected volume flow ▪ Gross corrected volume flow, replacement ▪ Net corrected volume flow ▪ Net corrected volume flow, replacement ▪ Sediment and water volume flow

Data structure

Input data of Analog Input

Byte 1	Byte 2	Byte 3	Byte 4	Byte 5
Measured value: floating point number (IEEE 754)				Status [1]

1) Status coding → 🗎 85

Application-specific Input module

Transmit compensation values from the measuring device to the automation system.

The Application-specific Input module cyclically transmits compensation values, including the status, from the measuring device to the automation system. The compensation value is depicted in the first four bytes in the form of a floating point number as per the IEEE 754 standard. The fifth byte contains standardized status information pertaining to the compensation value.

Assigned compensation values

The configuration is performed via: Expert → Application → Application specific calculations → Process variables

Slot	Compensation value
31	Application-specific Input module
32	Application-specific Input module

Data structure

Input data of Application-specific Input module

Byte 1	Byte 2	Byte 3	Byte 4	Byte 5
Measured value: floating point number (IEEE 754)				Status [1]

1) Status coding

Failsafe mode

A failsafe mode can be defined for using the compensation values.

If the status is GOOD or UNCERTAIN, the compensation values transmitted by the automation system are used. If the status is BAD, the failsafe mode is activated for the use of the compensation values.

Parameters are available per compensation value to define the failsafe mode: Expert → Application → Application specific calculations → Process variables

Fail safe type parameter
- **Fail-safe value** option: The value defined in the Fail safe value parameter is used.
- **Fallback value** option: The last valid value is used.
- **Off** option: Failsafe mode is disabled.

Fail safe value parameter
Use this parameter to enter the compensation value which is used if the Fail safe value option is selected in the Fail safe type parameter.

Digital Input module

Transmit digital input values from the measuring device to the automation system.

Digital input values are used by the measuring device to transmit the state of device functions to the automation system.

Digital Input modules cyclically transmit discrete input values, including the status, from the measuring device to the automation system. The discrete input value is depicted in the first byte. The second byte contains standardized status information pertaining to the input value.

Selection: device function

Slot	Device function	Status (meaning)
1 to 14	Empty pipe detection	▪ 0 (device function not active) ▪ 1 (device function active)
	Low flow cut off	

Data structure

Input data of Digital Input

Byte 1	Byte 2
Digital Input	Status [1)]

1) Status coding → 🗎 85

Diagnose Input module

Transmit discrete input values (diagnostic information) from the measuring device to the automation system.

Diagnostic information is used by the measuring device to transmit the device status to the automation system.

Diagnose Input modules transmit discrete input values from the measuring device to the automation system. The first two bytes contain the information regarding the diagnostic information number (→ 🗎 182). The third byte provides the status.

Selection: device function

Slot	Device function	Status (meaning)
1 to 14	Last diagnostics	Diagnostic information number (→ 🗎 182) and status
	Current diagnosis	

Information about pending diagnostic information → 🗎 233.

Data structure

Input data of Diagnose Input

Byte 1	Byte 2	Byte 3	Byte 4
Diagnostic information number		Status	Value 0

Status

Coding (hex)	Status
0x00	No device error is present.
0x01	Failure (F): A device error is present. The measured value is no longer valid.
0x02	Function check (C): The device is in service mode (e.g. during a simulation).
0x04	Maintenance required (M): Maintenance is required. The measured value is still valid.
0x08	Out of specification (S): The device is being operated outside its technical specification limits (e.g. process temperature range).

Totalizer module

The Totalizer module consists of the Totalizer Value, Totalizer Control and Totalizer Mode submodules.

Totalizer Value submodule

Transmit transmitter value from the device to the automation system.

Totalizer modules cyclically transmit a selected totalizer value, along with the status, from the measuring device to the automation system via the Totalizer Value submodule. The totalizer value is depicted in the first four bytes in the form of a floating point number as per the IEEE 754 standard. The fifth byte contains status information pertaining to the totalizer value.

Selection: input variable

Slot	Sub-slot	Input variable
15...17	1	▪ Mass flow ▪ Volume flow ▪ Corrected volume flow ▪ Target mass flow [1)] ▪ Carrier mass flow [1)]

1) Only available with the Concentration application package

Data structure of input data (Totalizer Value submodule)

Byte 1	Byte 2	Byte 3	Byte 4	Byte 5
Measured value: floating point number (IEEE 754)				Status [1)]

1) Status coding → 🗎 85

Totalizer Control module

Transmit totalizer value from the measuring device to the automation system.

Selection: input variable

Data structure

Totalizer Control input data

Byte 1	Byte 2	Byte 3	Byte 4	Byte 5
Measured value: floating point number (IEEE 754)				Status [1)]

1) Status coding

Selection: output variable

Transmit the control value from the automation system to the measuring device.

Slot	Sub-slot	Value	Input variable
70 to 71	1	1	Reset to "0"
		2	Preset value
		3	Stop
		4	Totalize

Data structure

Totalizer Control output data

Byte 1
Control variable

Totalizer Control submodule

Control the totalizer via the automation system.

Selection: control totalizer

Slot	Sub-slot	Value	Control totalizer
15...17	2	0	Totalize
		1	Reset + hold
		2	Preset + hold
		3	Reset + totalize
		4	Preset + totalize
		5	Hold

Data structure of output data (Totalizer Control submodule)

Byte 1
Control variable

Totalizer Mode submodule

Configure the totalizer via the automation system.

Selection: totalizer configuration

Slot	Sub-slot	Value	Control totalizer
15...17	3	0	Balancing
		1	Balance the positive flow
		2	Balance the negative flow

Data structure of output data (Totalizer Mode submodule)

Byte 1
Configuration variable

Analog Output module

Transmit compensation values from the automation system to the measuring device.

Analog Output modules cyclically transmit compensation values, along with the status and the associated unit, from the automation system to the measuring device. The compensation value is depicted in the first four bytes in the form of a floating point number as per the IEEE 754 standard. The fifth byte contains standardized status information pertaining to the compensation value. The unit is transmitted in the sixth and seventh byte.

Assigned compensation values

The configuration is performed via: Expert → Sensor → External compensation

Slot	Compensation value
18	External pressure
19	External temperature
20	External reference density
29	External value for % S&W (sediment and water) [1]
30	External value for % Water cut [1]

1) Only available with the Petroleum application package.

Available units

Pressure		Temperature		Density		Percent	
Unit code	Unit	Unit code	Unit	Unit code	Unit	Unit code	Unit
1610	Pa a	1001	°C	32840	kg/Nm³	1342	%
1616	kPa a	1002	°F	32841	kg/Nl		
1614	MPa a	1000	K	32842	g/Scm3		
1137	bar	1003	°R	32843	kg/Scm3		
1611	Pa g			32844	lb/Sft3		
1617	kPa g						
1615	MPa g						
32797	bar g						
1142	psi a						
1143	psi g						

Data structure

Output data of Analog Output

Byte 1	Byte 2	Byte 3	Byte 4	Byte 5	Byte 6	Byte 7
Measured value: floating point number (IEEE 754)				Status [1]	Unit code	

1) Status coding → 📄 85

Failsafe mode

A failsafe mode can be defined for using the compensation values.

If the status is GOOD or UNCERTAIN, the compensation values transmitted by the automation system are used. If the status is BAD, the failsafe mode is activated for the use of the compensation values.

Parameters are available per compensation value to define the failsafe mode: Expert → Sensor → External compensation

Fail safe type parameter

- Fail safe value option: The value defined in the Fail safe value parameter is used.
- Fallback value option: The last valid value is used.
- Off option: The failsafe mode is disabled.

Fail safe value parameter
Use this parameter to enter the compensation value which is used if the Fail safe value option is selected in the Fail safe type parameter.

Digital Output module

Transmit digital output values from the automation system to the measuring device.

Digital output values are used by the automation system to enable and disable device functions.

Digital output values cyclically transmit discrete output values, including the status, from the automation system to the measuring device. The discrete output value is transmitted in the first byte. The second byte contains status information pertaining to the output value.

Assigned device functions

Slot	Device function	Status (meaning)
21	Flow override	▪ 0 (disable device function) ▪ 1 (enable device function)
22	Zero adjust	
24 to 26	Relay output	Relay output value: ▪ 0 ▪ 1

Data structure

Output data of Digital Output

Byte 1	Byte 2
Digital Output	Status [1) 2)]

1) Status coding → 🗎 85
2) If the status is BAD, the control variable is not adopted.

Heartbeat Verification module

Receive discrete output values from the automation system and transmit discrete input values from the measuring instrument to the automation system.

The Heartbeat Verification module receives discrete output data from the automation system and transmits discrete input data from the measuring instrument to the automation system.

The discrete output value is provided by the automation system to start a Heartbeat Verification. The discrete input value is depicted in the first byte. The second byte contains status information pertaining to the input value.

The discrete input value is used by the measuring instrument to send the status of the Heartbeat Verification device functions to the automation system. The module cyclically transmits the discrete input value, along with the status, to the automation system. The discrete input value is depicted in the first byte. The second byte contains status information pertaining to the input value.

Only available with the Heartbeat Verification application package.

Assigned device functions

Slot	Device function	Bit	Verification status
23	Verification status (input data)	0	Verification has not been performed

		1	The device has failed the verification
		2	Currently performing verification
		3	Verification finished
	Verification result (input data)	**Bit**	**Verification result**
		4	The device has failed the verification
		5	Verification performed successfully
		6	Verification has not been performed
		7	–
	Start the verification (output data)	**Verification control**	
		A status change from 0 to 1 starts the verification	

Data structure

Output data of Heartbeat Verification module

Byte 1
Discrete Output

Input data of Heartbeat Verification module

Byte 1	Byte 2
Discrete Input	Status [1)]

1) Status coding → 🗎 85

Concentration module

Only available with the Concentration Measurement application package.

Assigned device functions

Slot	Input variables
28	Selection of the liquid type

Data structure

Concentration output data

Byte 1
Control variable

Liquid type	Enum code
Off	0
Sucrose in water	5
Glucose in water	2
Fructose in water	1
Invert sugar in water	6
Corn syrup HFCS42	15

Liquid type	Enum code
Corn syrup HFCS55	16
Corn syrup HFCS90	17
Original wort	18
Ethanol in water	11
Methanol in water	12
Hydrogen peroxide in water	4
Hydrochloric acid	24
Sulfuric acid	25
Nitric acid	7
Phosphoric acid	8
Sodium hydroxide	10
Potassium hydroxide	9
Ammonium nitrate in water	13
Iron(III) chloride in water	14
% mass / % volume	19
User Profile Coef Set No. 1	21
User Profile Coef Set No. 2	22
User Profile Coef Set No. 3	23

9.3.3 Status coding

Status	Coding (hex)	Meaning
BAD - Maintenance alarm	0x24	A measured value is not available because a device error has occurred.
BAD - Process related	0x28	A measured value is not available because the process conditions are not within the device's technical specification limits.
BAD - Function check	0x3C	A function check is active (e.g. cleaning or calibration)
UNCERTAIN - Initial value	0x4F	A predefined value is output until a correct measured value is available again or corrective measures have been performed that change this status.
UNCERTAIN - Maintenance demanded	0x68	Signs of wear and tear have been detected on the measuring instrument. Short-term maintenance is necessary to ensure that the measuring instrument remains ready for use. The measured value might be invalid. The use of the measured value depends on the application.
UNCERTAIN - Process related	0x78	The process conditions are not within the device's technical specification limits. This could have a negative impact on the quality and accuracy of the measured value. The use of the measured value depends on the application.
GOOD - OK	0x80	No error has been diagnosed.

Status	Coding (hex)	Meaning
GOOD - Maintenance demanded	0xA8	The measured value is valid. It is strongly recommended to service the device in the near future.
GOOD - Function check	0xBC	The measured value is valid. The measuring instrument is performing an internal function check. The function check does not have any noticeable effect on the process.

9.3.4 Factory setting

The slots are already assigned in the automation system for initial commissioning.

Assigned slots

Slot	Factory setting
1	Mass flow
2	Volume flow
3	Corrected volume flow
4	Density
5	Reference density
6	Temperature
7 to 14	–
15	Totalizer 1
16	Totalizer 2
17	Totalizer 3

9.3.5 Startup configuration

If startup configuration is enabled, the configuration of the most important device parameters is taken from the automation system and used. The following configurations are taken from the automation system.

Startup configuration (NSU)	▪ Management:
	  ▪ Software revision
	  ▪ Write protection
	  ▪ Web server functionality
	  ▪ WLAN functionality
	▪ System units:
	  ▪ Mass flow
	  ▪ Mass
	  ▪ Volume flow
	  ▪ Volume
	  ▪ Corrected volume flow
	  ▪ Corrected volume
	  ▪ Density
	  ▪ Reference density
	  ▪ Temperature
	  ▪ Pressure
	▪ Concentration application package:
	  ▪ Coefficients A0 to A4
	  ▪ Coefficients B1 to B3
	  ▪ Medium type
	▪ Sensor adjustment
	▪ Process parameter:
	  ▪ Damping (flow, density, temperature)
	  ▪ Flow override
	▪ Low flow cut off:
	  ▪ Assign process variable
	  ▪ Switch-on/switch-off point
	  ▪ Pressure shock suppression
	▪ Empty pipe detection:
	  ▪ Assign process variable
	  ▪ Limits
	  ▪ Response time
	  ▪ Max. damping
	▪ Corrected volume flow calculation:
	  ▪ External reference density
	  ▪ Fixed reference density
	  ▪ Reference temperature
	  ▪ Linear expansion coefficient
	  ▪ Square expansion coefficient
	▪ Measuring mode:
	  ▪ Medium
	  ▪ Gas type
	  ▪ Reference sound velocity
	  ▪ Temperature coefficient sound velocity
	▪ External compensation:
	  ▪ Pressure compensation
	  ▪ Pressure value
	  ▪ External pressure
	▪ Alarm delay
	▪ Diagnostic settings
	▪ Diagnostic behavior for diverse diagnostic information
	▪ Petroleum application package:
	  ▪ Petroleum mode
	  ▪ Water density unit
	  ▪ Water reference density unit
	  ▪ Oil density unit
	  ▪ Oil sample density
	  ▪ Oil sample temperature
	  ▪ Oil sample pressure
	  ▪ Water sample density
	  ▪ Water sample temperature
	  ▪ API commodity group
	  ▪ API table selection
	  ▪ Thermal expansion coefficient

9.4 System redundancy S2

For system-redundant operation in a continuous process, two mutually synchronized automation systems are required. If one system fails the second system guarantees continued, uninterrupted operation. The measuring instrument supports S2 system redundancy and can communicate with both automation systems simultaneously.

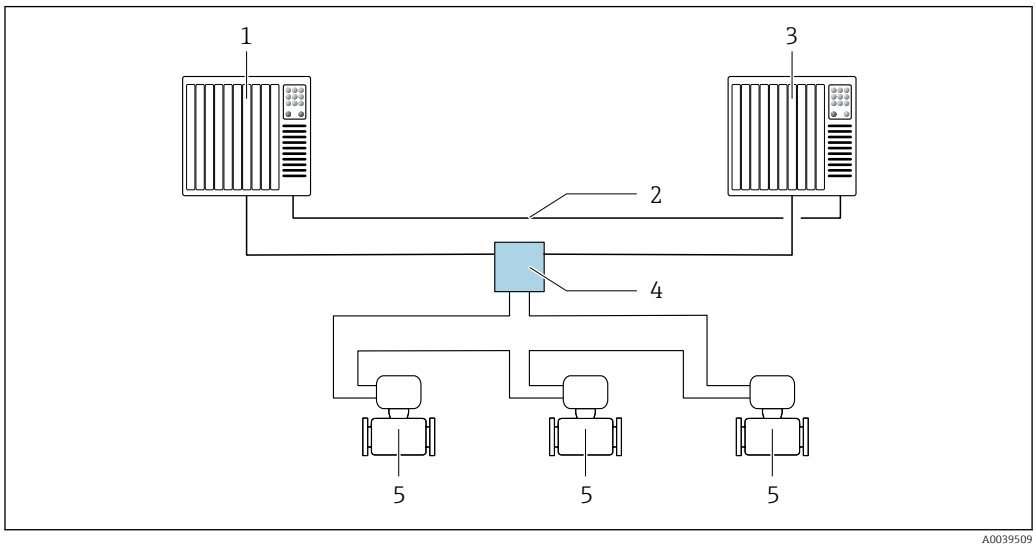

26 Example of the layout of a redundant system (S2): ring topology

1 *Automation system 1*
2 *Synchronization of automation systems*
3 *Automation system 2*
4 *Industrial Ethernet Managed Switch*
5 *Measuring instrument*

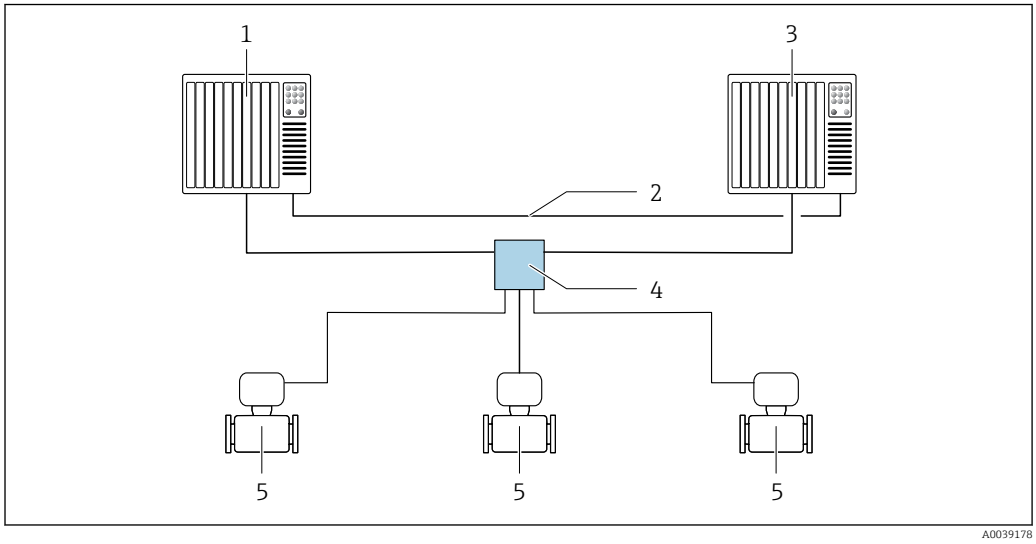

27 Example of the layout of a redundant system (S2): star topology

1 *Automation system 1*
2 *Synchronization of automation systems*
3 *Automation system 2*
4 *Industrial Ethernet Managed Switch*
5 *Measuring instrument*

All the devices in the network must support S2 system redundancy.

10 Commissioning

10.1 Post-installation and post-connection check

Before commissioning the device:

- ▶ Make sure that the post-installation and post-connection checks have been performed successfully.

- Checklist for "Post-installation" check→ 📄 30
- Checklist for "Post-connection" check→ 📄 46

10.2 Switching on the measuring instrument

- ▶ Switch on the device upon successful completion of the post-mounting and post-connection check.
  - ↳ After a successful startup, the local display switches automatically from the startup display to the operational display.

If nothing appears on the local display or if a diagnostic message is displayed, refer to the section on "Diagnostics and troubleshooting" → 📄 170.

10.3 Connecting via FieldCare

- For connecting FieldCare → 📄 70
- For connecting via FieldCare
- For user interface of FieldCare

10.4 Setting the operating language

Factory setting: English or ordered local language

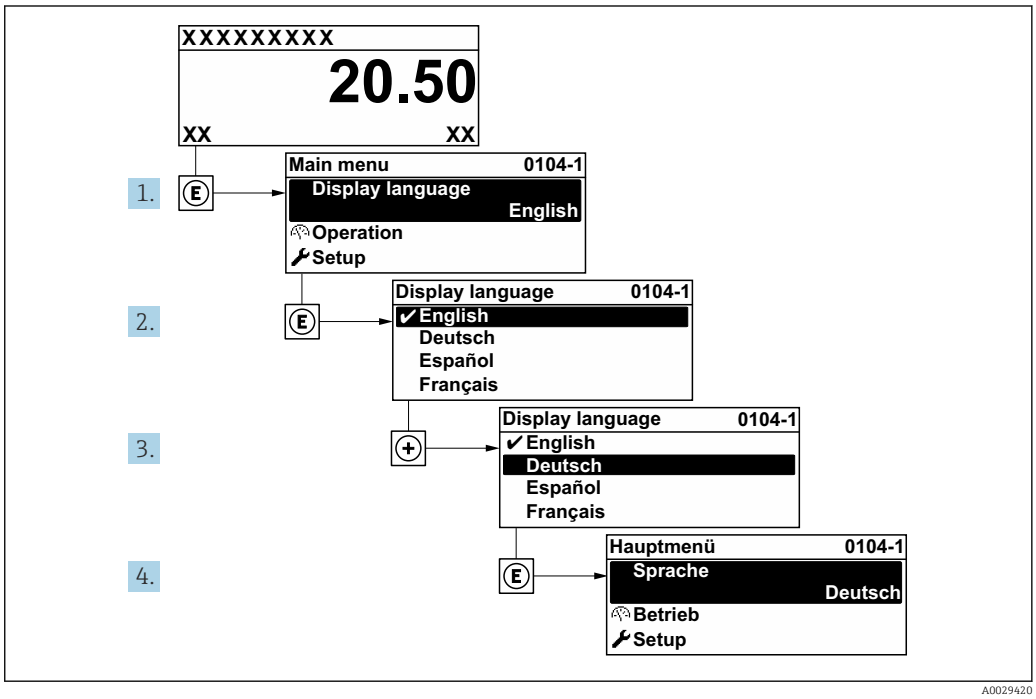

28 *Taking the example of the local display*

10.5 Initializing the measuring instrument

1. Fill the system with liquid (density: 800 to 1 500 kg/m^3 (1 764 to 3 307 lb/cf)).
2. Prevent any flow.
3. Repeated flushing can help to eliminate gas pockets.
4. Perform device initialization: Expert → Sensor → Disposable component → Commissioning, Modbus register 26321-1 or Profinet.
5. Heartbeat Verification and zero point adjustment are performed. This diagnostic message is displayed during this time: Device initialization active.
6. Heartbeat Verification and zero point adjustment have been performed: No diagnostic message is displayed.

The measuring instrument is initialized.

Navigation
"Expert" menu → Sensor → Disposable component

Parameter overview with brief description

Parameter	Description	Selection
Commissioning	Start commissioning of the sensor manually if does not start automatically.	▪ Start ▪ Busy ▪ Done ▪ Not done

10.6 Configuring the device

The **Setup** menu with its guided wizards contains all the parameters needed for standard operation.

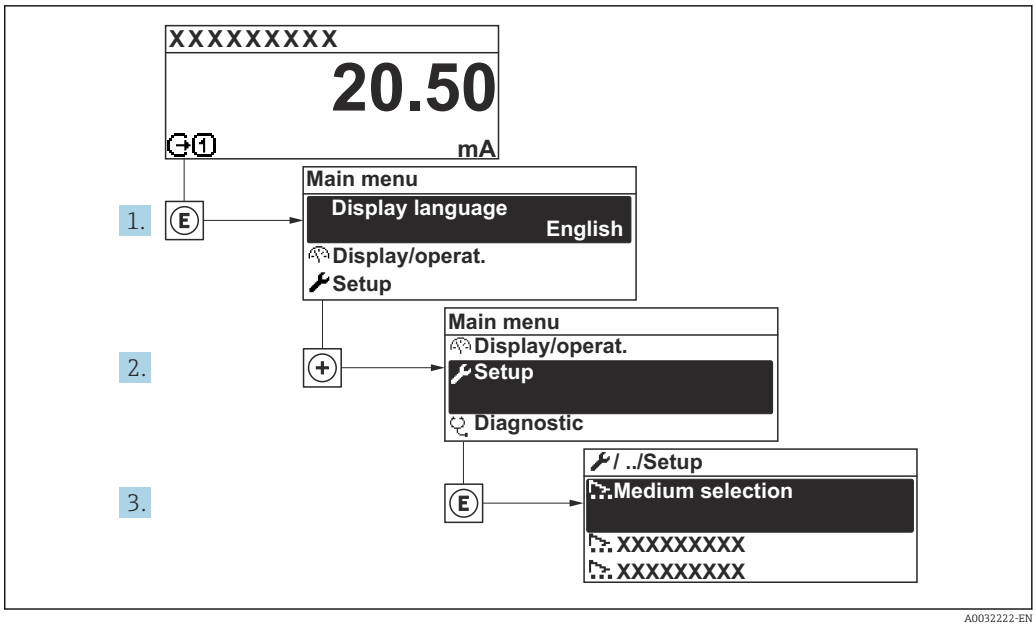

29 *Navigation to the "Setup" menu using the example of the local display*

The number of submenus and parameters can vary depending on the device version. Certain submenus and parameters in these submenus are not described in the Operating Instructions. Instead a description is provided in the Special Documentation for the device ("Supplementary documentation").

Setup

Name of station	→ 92
▶ System units	→ 93
▶ Communication	→ 92
▶ Medium selection	→ 96
▶ I/O configuration	→ 98
▶ Current input 1 to n	→ 99
▶ Status input 1 to n	→ 101
▶ Current output 1 to n	→ 101
▶ Pulse/frequency/switch output 1 to n	→ 105
▶ Relay output 1 to n	→ 114
▶ Display	→ 117
▶ Low flow cut off	→ 121

▶ **Partially filled pipe detection**	→ 📄 122
▶ **Advanced setup**	→ 📄 123

10.6.1 Defining the tag name

A measuring point can be quickly identified within a plant on the basis of the tag name. The tag name is equivalent to the device name (name of station) of the PROFINET specification (data length: 255 bytes)

The device name can be changed via DIP switches or the automation system .

The device name currently used is displayed in the **Name of station** parameter.

Navigation
"Setup" menu → PROFINET device name

Parameter overview with brief description

Parameter	Description	User interface	Factory setting
Name of station	Name of the measuring point.	Max. 32 characters such as letters and numbers.	EH-PROMASS300 serial number of the device

10.6.2 Displaying the communication interface

The **Communication** submenu shows all the current parameter settings for selecting and configuring the communication interface.

Navigation
"Setup" menu → Communication

▶ **Communication**	
MAC address (7214)	→ 📄 92
IP address (7209)	→ 📄 92
Subnet mask (7211)	→ 📄 93
Default gateway (7210)	→ 📄 93

Parameter overview with brief description

Parameter	Description	User interface / User entry	Factory setting
MAC address	Displays the MAC address of the measuring instrument. ℹ MAC = Media Access Control	Unique 12-digit character string comprising letters and numbers, e.g.: 00:07:05:10:01:5F	Each measuring instrument is given an individual address.
IP address	IP address of the Web server integrated in the measuring instrument. If the DHCP client and write access are switched off, the IP address can also be entered.	4 octet: 0 to 255 (in the particular octet)	–

Parameter	Description	User interface / User entry	Factory setting
Subnet mask	Displays the subnet mask. If the DHCP client and write access are switched off, the Subnet mask can also be entered.	4 octet: 0 to 255 (in the particular octet)	–
Default gateway	Displays the default gateway. If the DHCP client and write access are switched off, the Default gateway can also be entered.	4 octet: 0 to 255 (in the particular octet)	–

10.6.3 Setting the system units

In the **System units** submenu the units of all the measured values can be set.

The number of submenus and parameters can vary depending on the device version. Certain submenus and parameters in these submenus are not described in the Operating Instructions. Instead a description is provided in the Special Documentation for the device ("Supplementary documentation").

Navigation
"Setup" menu → System units

▶ **System units**

Mass flow unit	→ 📄 94
Mass unit	→ 📄 94
Volume flow unit	→ 📄 94
Volume unit	→ 📄 94
Corrected volume flow unit	→ 📄 94
Corrected volume unit	→ 📄 94
Density unit	→ 📄 94
Reference density unit	→ 📄 94
Temperature unit	→ 📄 95
Pressure unit	→ 📄 95

Parameter overview with brief description

Parameter	Description	Selection	Factory setting
Mass flow unit	Select mass flow unit. *Effect* The selected unit applies to: ▪ Output ▪ Low flow cut off ▪ Simulation process variable	Unit choose list	Country-specific: ▪ kg/h ▪ lb/min
Mass unit	Select mass unit.	Unit choose list	Country-specific: ▪ kg ▪ lb
Volume flow unit	Select volume flow unit. *Effect* The selected unit applies to: ▪ Output ▪ Low flow cut off ▪ Simulation process variable	Unit choose list	Country-specific: ▪ l/h ▪ gal/min (us)
Volume unit	Select volume unit.	Unit choose list	Country-specific: ▪ l (DN > 150 (6"): **m³** option) ▪ gal (us)
Corrected volume flow unit	Select corrected volume flow unit. *Effect* The selected unit applies to: **Corrected volume flow** parameter (→ 🗎 150)	Unit choose list	Country-specific: ▪ Nl/h ▪ Sft³/min
Corrected volume unit	Select corrected volume unit.	Unit choose list	Country-specific: ▪ Nl ▪ Sft³
Reference density unit	Select reference density unit.	Unit choose list	Country-specific ▪ kg/Nl ▪ lb/Sft³
Density unit	Select density unit. *Effect* The selected unit applies to: ▪ Output ▪ Simulation process variable ▪ Density adjustment (**Expert** menu)	Unit choose list	Country-specific: ▪ kg/l ▪ lb/ft³
Density 2 unit	Select second density unit.	Unit choose list	Country-specific: ▪ kg/l ▪ lb/ft³

Parameter	Description	Selection	Factory setting
Temperature unit	Select temperature unit. *Effect* The selected unit applies to: ▪ **Electronic temperature** parameter (6053) ▪ **Maximum value** parameter (6051) ▪ **Minimum value** parameter (6052) ▪ **External temperature** parameter (6080) ▪ **Maximum value** parameter (6108) ▪ **Minimum value** parameter (6109) ▪ **Carrier pipe temperature** parameter (6027) ▪ **Maximum value** parameter (6029) ▪ **Minimum value** parameter (6030) ▪ **Reference temperature** parameter (1816) ▪ **Temperature** parameter	Unit choose list	Country-specific: ▪ ℃ ▪ ℉
Pressure unit	Select process pressure unit. *Effect* The unit is taken from: ▪ **Pressure value** parameter (→ 🗎 97) ▪ **External pressure** parameter (→ 🗎 97) ▪ Pressure value	Unit choose list	Country-specific: ▪ bar a ▪ psi a

10.6.4 Selecting and setting the medium

The **Select medium** wizard submenu contains parameters that must be configured in order to select and set the medium.

Navigation
"Setup" menu → Medium selection

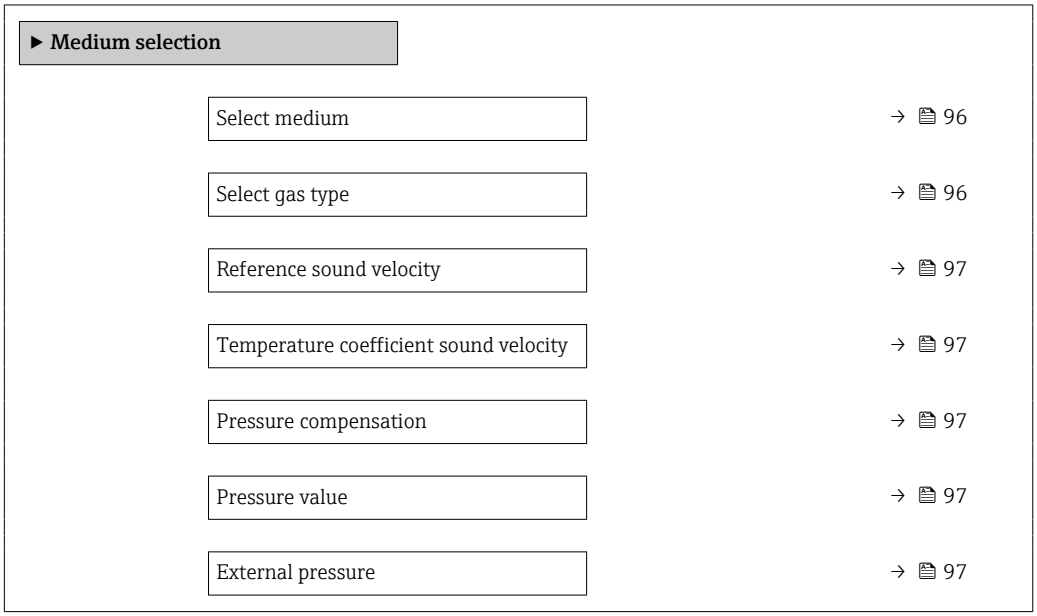

Parameter overview with brief description

Parameter	Prerequisite	Description	Selection / User entry / User interface
Select medium	–	Use this function to select the type of medium: "Gas" or "Liquid". Select the "Other" option in exceptional cases in order to enter the properties of the medium manually (e.g. for highly compressive liquids such as sulfuric acid).	▪ Liquid ▪ Gas
Select gas type	In the **Medium selection** submenu, the **Gas** option is selected.	Select measured gas type.	▪ Air ▪ Ammonia NH3 ▪ Argon Ar ▪ Sulfur hexafluoride SF6 ▪ Oxygen O2 ▪ Ozone O3 ▪ Nitrogen oxide NOx ▪ Nitrogen N2 ▪ Nitrous oxide N2O ▪ Methane CH4 ▪ Hydrogen H2 ▪ Helium He ▪ Hydrogen chloride HCl ▪ Hydrogen sulfide H2S ▪ Ethylene C2H4 ▪ Carbon dioxide CO2 ▪ Carbon monoxide CO ▪ Chlorine Cl2 ▪ Butane C4H10 ▪ Propane C3H8 ▪ Propylene C3H6 ▪ Ethane C2H6 ▪ Others

Parameter	Prerequisite	Description	Selection / User entry / User interface
Reference sound velocity	In the **Select gas type** parameter, the **Others** option is selected.	Enter sound velocity of gas at 0 °C (32 °F).	1 to 99 999.9999 m/s
Reference sound velocity	In the **Select medium type** parameter, the **Others** option is selected.	Enter sound velocity of gas at 0 °C (32 °F).	Signed floating-point number
Temperature coefficient sound velocity	In the **Select gas type** parameter, the **Others** option is selected.	Enter temperature coefficient for the gas sound velocity.	Positive floating point number
Temperature coefficient sound velocity	In the **Select medium type** parameter, the **Others** option is selected.	Enter temperature coefficient for the gas sound velocity.	Signed floating-point number
Pressure compensation	–	Select pressure compensation type.	▪ Off ▪ Fixed value ▪ External value ▪ Current input 1 * ▪ Current input 2 *
Pressure value	In the **Pressure compensation** parameter, the **Fixed value** option is selected.	Enter process pressure to be used for pressure correction.	Positive floating-point number
External pressure	In the **Pressure compensation** parameter, the **External value** option or the **Current input 1…n** option is selected.	Shows the external process pressure value.	

* Visibility depends on order options or device settings

10.6.5 Configuration of the Analog Inputs

The **Analog inputs** submenu guides the user systematically to the individual **Analog input 1 to n** submenu. From here you get to the parameters of the individual analog input.

Navigation
"Setup" menu → Analog inputs

▶ **Analog inputs**		
	▶ **Volume flow**	→ 📄 98

"Analog inputs" submenu

Navigation
"Setup" menu → Analog inputs → Volume flow

▶ **Volume flow**		
	Assign process variable (11074)	→ 📄 98
	Damping (11073)	→ 📄 98

Parameter overview with brief description

Parameter	Description	User interface / User entry
Parent class		0 to 255
Assign process variable	Select a process variable.	▪ Mass flow ▪ Volume flow ▪ Density ▪ Temperature ▪ Pressure ▪ Specific volume ▪ Degrees of superheat ▪ Electronic temperature ▪ Vortex frequency ▪ Vortex kurtosis ▪ Vortex amplitude ▪ Calculated saturated steam pressure ▪ Steam quality ▪ Total mass flow ▪ Condensate mass flow ▪ Energy flow ▪ Heat flow difference ▪ Reynolds number ▪ Flow velocity ▪ Corrected volume flow
Damping	Enter time constant for input damping (PT1 element). Damping reduces the effect of fluctuations in the measured value on the output signal.	Positive floating-point number

10.6.6 Displaying the I/O configuration

The **I/O configuration** submenu guides the user systematically through all the parameters in which the configuration of the I/O modules is displayed.

Navigation
"Setup" menu → I/O configuration

▶ I/O configuration	
I/O module 1 to n terminal numbers	→ 📄 99
I/O module 1 to n information	→ 📄 99
I/O module 1 to n type	→ 📄 99
Apply I/O configuration	→ 📄 99
I/O alteration code	→ 📄 99

Parameter overview with brief description

Parameter	Description	User interface / Selection / User entry
I/O module 1 to n terminal numbers	Shows the terminal numbers used by the I/O module.	▪ Not used ▪ 26-27 (I/O 1) ▪ 24-25 (I/O 2) ▪ 22-23 (I/O 3)
I/O module 1 to n information	Shows information of the plugged I/O module.	▪ Not plugged ▪ Invalid ▪ Not configurable ▪ Configurable ▪ PROFINET
I/O module 1 to n type	Shows the I/O module type.	▪ Off ▪ Current output * ▪ Current input * ▪ Status input * ▪ Pulse/frequency/switch output * ▪ Double pulse output * ▪ Relay output *
Apply I/O configuration	Apply parameterization of the freely configurable I/O module.	▪ No ▪ Yes
I/O alteration code	Enter the code in order to change the I/O configuration.	Positive integer

* Visibility depends on order options or device settings

10.6.7 Configuring the current input

The **"Current input" wizard** guides the user systematically through all the parameters that have to be set for configuring the current input.

Navigation
"Setup" menu → Current input

▶ Current input 1 to n	
Current span	→ 📄 100

Terminal number	→ 100
Signal mode	→ 100
Terminal number	→ 100
0/4 mA value	→ 100
20 mA value	→ 100
Failure mode	→ 100
Terminal number	→ 100
Failure value	→ 100
Terminal number	→ 100

Parameter overview with brief description

Parameter	Prerequisite	Description	Selection / User interface / User entry	Factory setting
Current span	–	Select current range for process value output and upper/lower level for alarm signal.	▪ 4...20 mA (4... 20.5 mA) ▪ 4...20 mA NAMUR (3.8...20.5 mA) ▪ 4...20 mA US (3.9...20.8 mA) ▪ 0...20 mA (0... 20.5 mA)	–
Terminal number	–	Shows the terminal numbers used by the current input module.	▪ Not used ▪ 24-25 (I/O 2) ▪ 22-23 (I/O 3)	–
Signal mode	The measuring device is **not** approved for use in the hazardous area with type of protection Ex-i.	Select the signal mode for the current input.	▪ Passive ▪ Active *	Active
0/4 mA value	–	Enter 4 mA value.	Signed floating-point number	–
20 mA value	–	Enter 20 mA value.	Signed floating-point number	Depends on country and nominal diameter
Failure mode	–	Define input behavior in alarm condition.	▪ Alarm ▪ Last valid value ▪ Defined value	–
Failure value	In the **Failure mode** parameter, the **Defined value** option is selected.	Enter value to be used by the device if input value from external device is missing.	Signed floating-point number	–

* Visibility depends on order options or device settings

10.6.8 Configuring the status input

The **Status input** submenu guides the user systematically through all the parameters that have to be set for configuring the status input.

Navigation
"Setup" menu → Status input 1 to n

▶ Status input 1 to n	
Assign status input	→ 101
Terminal number	→ 101
Active level	→ 101
Terminal number	→ 101
Response time status input	→ 101
Terminal number	→ 101

Parameter overview with brief description

Parameter	Description	Selection / User interface / User entry
Assign status input	Select function for the status input.	▪ Off ▪ Reset totalizer 1 ▪ Reset totalizer 2 ▪ Reset totalizer 3 ▪ Reset all totalizers ▪ Flow override ▪ Zero point adjustment
Terminal number	Shows the terminal numbers used by the status input module.	▪ Not used ▪ 24-25 (I/O 2) ▪ 22-23 (I/O 3)
Active level	Define input signal level at which the assigned function is triggered.	▪ High ▪ Low
Response time status input	Define the minimum amount of time the input signal level must be present before the selected function is triggered.	5 to 200 ms

10.6.9 Configuring the current output

The **Current output** wizard guides you systematically through all the parameters that have to be set for configuring the current output.

Navigation
"Setup" menu → Current output

▶ Current output 1 to n	
Assign current output 1 to n	→ 103

Terminal number	→ 102
Current span	→ 104
Terminal number	→ 102
Signal mode	→ 102
Terminal number	→ 102
0/4 mA value	→ 104
20 mA value	→ 104
Fixed current	→ 104
Terminal number	→ 102
Damping output 1 to n	→ 104
Failure mode	→ 104
Terminal number	→ 102
Failure current	→ 104
Terminal number	→ 102

Parameter overview with brief description

Parameter	Prerequisite	Description	User interface / Selection / User entry	Factory setting
Terminal number	–	Shows the terminal numbers used by the current output module.	▪ Not used ▪ 24-25 (I/O 2) ▪ 22-23 (I/O 3)	–
Signal mode	–	Select the signal mode for the current output.	▪ Active * ▪ Passive *	Active

Parameter	Prerequisite	Description	User interface / Selection / User entry	Factory setting
Assign current output 1 to n	–	Select process variable for current output.	▪ Off * ▪ Mass flow ▪ Volume flow ▪ Corrected volume flow * ▪ Target mass flow * ▪ Carrier mass flow * ▪ Target volume flow * ▪ Carrier volume flow * ▪ Target corrected volume flow * ▪ Carrier corrected volume flow * ▪ Density ▪ Reference density * ▪ Reference density alternative * ▪ GSV flow * ▪ GSV flow alternative * ▪ NSV flow * ▪ NSV flow alternative * ▪ S&W volume flow * ▪ Water cut * ▪ Oil density * ▪ Water density * ▪ Oil mass flow * ▪ Water mass flow * ▪ Oil volume flow * ▪ Water volume flow * ▪ Oil corrected volume flow * ▪ Water corrected volume flow * ▪ Concentration * ▪ Temperature ▪ Carrier pipe temperature * ▪ Electronic temperature ▪ Oscillation frequency 0 ▪ Oscillation amplitude 0 * ▪ Frequency fluctuation 0 * ▪ Oscillation damping 0 * ▪ Oscillation damping fluctuation 0 * ▪ Signal asymmetry * ▪ Exciter current 0 * ▪ HBSI * ▪ Pressure * ▪ Application specific output 0 * ▪ Application specific output 1 * ▪ Index inhomogeneous medium	–

Parameter	Prerequisite	Description	User interface / Selection / User entry	Factory setting
			▪ Index suspended bubbles *	
Current span	–	Select current range for process value output and upper/lower level for alarm signal.	▪ 4...20 mA NAMUR (3.8...20.5 mA) ▪ 4...20 mA US (3.9...20.8 mA) ▪ 4...20 mA (4... 20.5 mA) ▪ 0...20 mA (0... 20.5 mA) ▪ Fixed current	Depends on country: ▪ 4...20 mA NAMUR (3.8...20.5 mA) ▪ 4...20 mA US (3.9...20.8 mA)
0/4 mA value	In **Current span** parameter (→ 🗎 104), one of the following options is selected: ▪ 4...20 mA NAMUR (3.8...20.5 mA) ▪ 4...20 mA US (3.9...20.8 mA) ▪ 4...20 mA (4... 20.5 mA) ▪ 0...20 mA (0... 20.5 mA)	Enter 4 mA value.	Signed floating-point number	Depends on country: ▪ 0 kg/h ▪ 0 lb/min
20 mA value	In **Current span** parameter (→ 🗎 104), one of the following options is selected: ▪ 4...20 mA NAMUR (3.8...20.5 mA) ▪ 4...20 mA US (3.9...20.8 mA) ▪ 4...20 mA (4... 20.5 mA) ▪ 0...20 mA (0... 20.5 mA)	Enter 20 mA value.	Signed floating-point number	Depends on country and nominal diameter
Fixed current	The **Fixed current** option is selected in the **Current span** parameter (→ 🗎 104).	Defines the fixed output current.	0 to 22.5 mA	22.5 mA
Damping output 1 to n	A process variable is selected in the **Assign current output** parameter (→ 🗎 103) and one of the following options is selected in the **Current span** parameter (→ 🗎 104): ▪ 4...20 mA NAMUR (3.8...20.5 mA) ▪ 4...20 mA US (3.9...20.8 mA) ▪ 4...20 mA (4... 20.5 mA) ▪ 0...20 mA (0... 20.5 mA)	Set reaction time for output signal to fluctuations in the measured value.	0.0 to 999.9 s	–
Failure mode	A process variable is selected in the **Assign current output** parameter (→ 🗎 103) and one of the following options is selected in the **Current span** parameter (→ 🗎 104): ▪ 4...20 mA NAMUR (3.8...20.5 mA) ▪ 4...20 mA US (3.9...20.8 mA) ▪ 4...20 mA (4... 20.5 mA) ▪ 0...20 mA (0... 20.5 mA)	Define output behavior in alarm condition.	▪ Min. ▪ Max. ▪ Last valid value ▪ Actual value ▪ Defined value	–
Failure current	The **Defined value** option is selected in the **Failure mode** parameter.	Enter current output value in alarm condition.	0 to 22.5 mA	22.5 mA

* Visibility depends on order options or device settings

10.6.10 Configuring the pulse/frequency/switch output

The **Pulse/frequency/switch output** wizard guides you systematically through all the parameters that can be set for configuring the selected output type.

Navigation
"Setup" menu → Advanced setup → Pulse/frequency/switch output

▶ **Pulse/frequency/switch output 1 to n**

Operating mode → 📄 105

Parameter overview with brief description

Parameter	Description	Selection
Operating mode	Define the output as a pulse, frequency or switch output.	▪ Pulse ▪ Frequency ▪ Switch

Configuring the pulse output

Navigation
"Setup" menu → Pulse/frequency/switch output

▶ **Pulse/frequency/switch output 1 to n**

Operating mode → 📄 106

Terminal number → 📄 106

Signal mode → 📄 106

Assign pulse output → 📄 106

Pulse scaling → 📄 106

Pulse width → 📄 106

Failure mode → 📄 107

Invert output signal → 📄 107

Parameter overview with brief description

Parameter	Prerequisite	Description	Selection / User interface / User entry	Factory setting
Operating mode	–	Define the output as a pulse, frequency or switch output.	▪ Pulse ▪ Frequency ▪ Switch	–
Terminal number	–	Shows the terminal numbers used by the PFS output module.	▪ Not used ▪ 24-25 (I/O 2) ▪ 22-23 (I/O 3)	–
Signal mode	–	Select the signal mode for the PFS output.	▪ Passive ▪ Active ▪ Passive NAMUR	–
Assign pulse output 1 to n	The **Pulse** option is selected in **Operating mode** parameter.	Select process variable for pulse output.	▪ Off ▪ Mass flow ▪ Volume flow ▪ Corrected volume flow * ▪ Target mass flow * ▪ Carrier mass flow * ▪ Target volume flow * ▪ Carrier volume flow * ▪ Target corrected volume flow * ▪ Carrier corrected volume flow * ▪ GSV flow * ▪ GSV flow alternative * ▪ NSV flow * ▪ NSV flow alternative * ▪ S&W volume flow * ▪ Oil mass flow * ▪ Water mass flow * ▪ Oil volume flow * ▪ Water volume flow * ▪ Oil corrected volume flow * ▪ Water corrected volume flow *	–
Pulse scaling	The **Pulse** option is selected in the **Operating mode** parameter (→ 🗎 105) and a process variable is selected in the **Assign pulse output** parameter (→ 🗎 106).	Enter quantity for measured value at which a pulse is output.	Positive floating point number	Depends on country and nominal diameter
Pulse width	The **Pulse** option is selected in the **Operating mode** parameter (→ 🗎 105) and a process variable is selected in the **Assign pulse output** parameter (→ 🗎 106).	Define time width of the output pulse.	0.05 to 2 000 ms	–

Parameter	Prerequisite	Description	Selection / User interface / User entry	Factory setting
Failure mode	The **Pulse** option is selected in the **Operating mode** parameter (→ 🗎 105) and a process variable is selected in the **Assign pulse output** parameter (→ 🗎 106).	Define output behavior in alarm condition.	▪ Actual value ▪ No pulses	–
Invert output signal	–	Invert the output signal.	▪ No ▪ Yes	–

* Visibility depends on order options or device settings

Configuring the frequency output

Navigation

"Setup" menu → Pulse/frequency/switch output

▶ **Pulse/frequency/switch output 1 to n**

Operating mode	→ 🗎 108
Terminal number	→ 🗎 108
Signal mode	→ 🗎 108
Assign frequency output	→ 🗎 109
Minimum frequency value	→ 🗎 110
Maximum frequency value	→ 🗎 110
Measuring value at minimum frequency	→ 🗎 110
Measuring value at maximum frequency	→ 🗎 110
Failure mode	→ 🗎 110
Failure frequency	→ 🗎 110
Invert output signal	→ 🗎 110

Parameter overview with brief description

Parameter	Prerequisite	Description	Selection / User interface / User entry	Factory setting
Operating mode	–	Define the output as a pulse, frequency or switch output.	▪ Pulse ▪ Frequency ▪ Switch	–
Terminal number	–	Shows the terminal numbers used by the PFS output module.	▪ Not used ▪ 24-25 (I/O 2) ▪ 22-23 (I/O 3)	–
Signal mode	–	Select the signal mode for the PFS output.	▪ Passive ▪ Active ▪ Passive NAMUR	–

Parameter	Prerequisite	Description	Selection / User interface / User entry	Factory setting
Assign frequency output	The **Frequency** option is selected in **Operating mode** parameter (→ 🗎 105).	Select process variable for frequency output.	▪ Off ▪ Mass flow ▪ Volume flow ▪ Corrected volume flow * ▪ Density ▪ Reference density * ▪ Temperature ▪ Pressure ▪ GSV flow * ▪ GSV flow alternative * ▪ NSV flow * ▪ NSV flow alternative * ▪ S&W volume flow * ▪ Reference density alternative * ▪ Water cut * ▪ Oil density * ▪ Water density * ▪ Oil mass flow * ▪ Water mass flow * ▪ Oil volume flow * ▪ Water volume flow * ▪ Oil corrected volume flow * ▪ Water corrected volume flow * ▪ Concentration * ▪ Target mass flow * ▪ Carrier mass flow * ▪ Target volume flow * ▪ Carrier volume flow * ▪ Target corrected volume flow * ▪ Carrier corrected volume flow * ▪ Application specific output 0 * ▪ Application specific output 1 * ▪ HBSI * ▪ Exciter current 0 ▪ Oscillation damping 0 ▪ Oscillation damping fluctuation 0 * ▪ Oscillation frequency 0 ▪ Frequency fluctuation 0 * ▪ Oscillation amplitude 0 * ▪ Signal asymmetry ▪ Carrier pipe temperature * ▪ Electronic temperature ▪ Index inhomogeneous medium	–

Parameter	Prerequisite	Description	Selection / User interface / User entry	Factory setting
			▪ Index suspended bubbles *	
Minimum frequency value	The **Frequency** option is selected in the **Operating mode** parameter (→ 🗎 105) and a process variable is selected in the **Assign frequency output** parameter (→ 🗎 109).	Enter minimum frequency.	0.0 to 10 000.0 Hz	–
Maximum frequency value	The **Frequency** option is selected in the **Operating mode** parameter (→ 🗎 105) and a process variable is selected in the **Assign frequency output** parameter (→ 🗎 109).	Enter maximum frequency.	0.0 to 10 000.0 Hz	–
Measuring value at minimum frequency	The **Frequency** option is selected in the **Operating mode** parameter (→ 🗎 105) and a process variable is selected in the **Assign frequency output** parameter (→ 🗎 109).	Enter measured value for minmum frequency.	Signed floating-point number	Depends on country and nominal diameter
Measuring value at maximum frequency	The **Frequency** option is selected in the **Operating mode** parameter (→ 🗎 105) and a process variable is selected in the **Assign frequency output** parameter (→ 🗎 109).	Enter measured value for maximum frequency.	Signed floating-point number	Depends on country and nominal diameter
Failure mode	The **Frequency** option is selected in the **Operating mode** parameter (→ 🗎 105) and a process variable is selected in the **Assign frequency output** parameter (→ 🗎 109).	Define output behavior in alarm condition.	▪ Actual value ▪ Defined value ▪ 0 Hz	–
Failure frequency	In the **Operating mode** parameter (→ 🗎 105), the **Frequency** option is selected, in the **Assign frequency output** parameter (→ 🗎 109) a process variable is selected, and in the **Failure mode** parameter, the **Defined value** option is selected.	Enter frequency output value in alarm condition.	0.0 to 12 500.0 Hz	–
Invert output signal	–	Invert the output signal.	▪ No ▪ Yes	–

* Visibility depends on order options or device settings

Configuring the switch output

Navigation
"Setup" menu → Pulse/frequency/switch output

▶ **Pulse/frequency/switch output 1 to n**

Operating mode	→ 111
Terminal number	→ 111
Signal mode	→ 111
Switch output function	→ 112
Assign diagnostic behavior	→ 112
Assign limit	→ 113
Assign flow direction check	→ 113
Assign status	→ 114
Switch-on value	→ 114
Switch-off value	→ 114
Switch-on delay	→ 114
Switch-off delay	→ 114
Failure mode	→ 114
Invert output signal	→ 114

Parameter overview with brief description

Parameter	Prerequisite	Description	Selection / User interface / User entry	Factory setting
Operating mode	–	Define the output as a pulse, frequency or switch output.	▪ Pulse ▪ Frequency ▪ Switch	–
Terminal number	–	Shows the terminal numbers used by the PFS output module.	▪ Not used ▪ 24-25 (I/O 2) ▪ 22-23 (I/O 3)	–
Signal mode	–	Select the signal mode for the PFS output.	▪ Passive ▪ Active ▪ Passive NAMUR	–

Parameter	Prerequisite	Description	Selection / User interface / User entry	Factory setting
Switch output function	The **Switch** option is selected in the **Operating mode** parameter.	Select function for switch output.	▪ Off ▪ On ▪ Diagnostic behavior ▪ Limit ▪ Flow direction check ▪ Status	–
Assign diagnostic behavior	▪ In the **Operating mode** parameter, the **Switch** option is selected. ▪ In the **Switch output function** parameter, the **Diagnostic behavior** option is selected.	Select diagnostic behavior for switch output.	▪ Alarm ▪ Alarm or warning ▪ Warning	–

Parameter	Prerequisite	Description	Selection / User interface / User entry	Factory setting
Assign limit	▪ The **Switch** option is selected in **Operating mode** parameter. ▪ The **Limit** option is selected in **Switch output function** parameter.	Select process variable for limit function.	▪ Mass flow ▪ Volume flow ▪ Corrected volume flow * ▪ Target mass flow * ▪ Carrier mass flow * ▪ Target volume flow * ▪ Carrier volume flow * ▪ Target corrected volume flow * ▪ Carrier corrected volume flow * ▪ Density ▪ Reference density * ▪ Reference density alternative * ▪ GSV flow * ▪ GSV flow alternative * ▪ NSV flow * ▪ NSV flow alternative * ▪ S&W volume flow * ▪ Water cut * ▪ Oil density * ▪ Water density * ▪ Oil mass flow * ▪ Water mass flow * ▪ Oil volume flow * ▪ Water volume flow * ▪ Oil corrected volume flow * ▪ Water corrected volume flow * ▪ Concentration * ▪ Temperature ▪ Totalizer 1 ▪ Totalizer 2 ▪ Totalizer 3 ▪ Oscillation damping ▪ Pressure ▪ Application specific output 0 * ▪ Application specific output 1 * ▪ Index inhomogeneous medium ▪ Index suspended bubbles *	–
Assign flow direction check	▪ The **Switch** option is selected in the **Operating mode** parameter. ▪ The **Flow direction check** option is selected in the **Switch output function** parameter.	Select process variable for flow direction monitoring.		–

Parameter	Prerequisite	Description	Selection / User interface / User entry	Factory setting
Assign status	▪ The **Switch** option is selected in **Operating mode** parameter. ▪ The **Status** option is selected in **Switch output function** parameter.	Select device status for switch output.	▪ Partially filled pipe detection ▪ Low flow cut off ▪ Profinet Slot 24 * ▪ Profinet Slot 25 * ▪ Profinet Slot 26 *	–
Switch-on value	▪ The **Switch** option is selected in the **Operating mode** parameter. ▪ The **Limit** option is selected in the **Switch output function** parameter.	Enter measured value for the switch-on point.	Signed floating-point number	Depends on country: ▪ 0 kg/h ▪ 0 lb/min
Switch-off value	▪ The **Switch** option is selected in the **Operating mode** parameter. ▪ The **Limit** option is selected in the **Switch output function** parameter.	Enter measured value for the switch-off point.	Signed floating-point number	Depends on country: ▪ 0 kg/h ▪ 0 lb/min
Switch-on delay	▪ The **Switch** option is selected in the **Operating mode** parameter. ▪ The **Limit** option is selected in the **Switch output function** parameter.	Define delay for the switch-on of status output.	0.0 to 100.0 s	–
Switch-off delay	▪ The **Switch** option is selected in the **Operating mode** parameter. ▪ The **Limit** option is selected in the **Switch output function** parameter.	Define delay for the switch-off of status output.	0.0 to 100.0 s	–
Failure mode	–	Define output behavior in alarm condition.	▪ Actual status ▪ Open ▪ Closed	–
Invert output signal	–	Invert the output signal.	▪ No ▪ Yes	–

* Visibility depends on order options or device settings

10.6.11 Configuring the relay output

The **Relay output** wizard guides the user systematically through all the parameters that have to be set for configuring the relay output.

Navigation

"Setup" menu → Relay output 1 to n

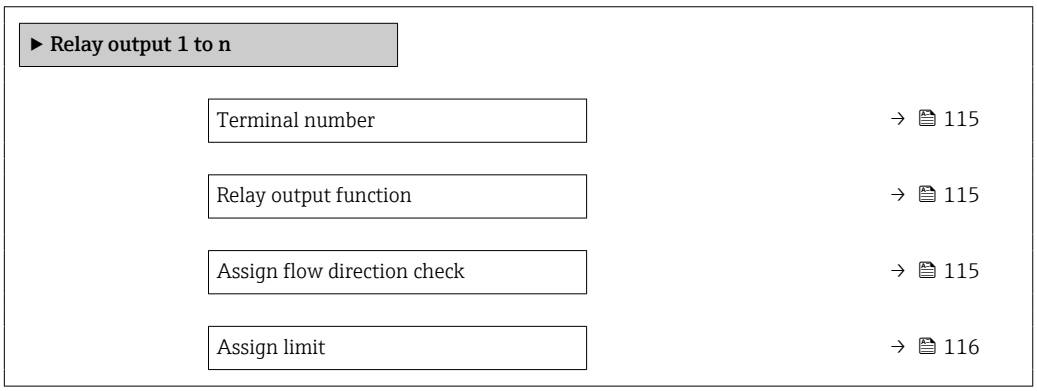

Assign diagnostic behavior	→ 116
Assign status	→ 116
Switch-off value	→ 117
Switch-off delay	→ 117
Switch-on value	→ 117
Switch-on delay	→ 117
Failure mode	→ 117
Switch status	→ 117
Powerless relay status	→ 117

Parameter overview with brief description

Parameter	Prerequisite	Description	User interface / Selection / User entry	Factory setting
Terminal number	–	Shows the terminal numbers used by the relay output module.	▪ Not used ▪ 24-25 (I/O 2) ▪ 22-23 (I/O 3)	–
Relay output function	–	Select the function for the relay output.	▪ Closed ▪ Open ▪ Diagnostic behavior ▪ Limit ▪ Flow direction check ▪ Digital Output	–
Assign flow direction check	The **Flow direction check** option is selected in the **Relay output function** parameter.	Select process variable for flow direction monitoring.		–

Parameter	Prerequisite	Description	User interface / Selection / User entry	Factory setting
Assign limit	The **Limit** option is selected in **Relay output function** parameter.	Select process variable for limit function.	▪ Mass flow ▪ Volume flow ▪ Corrected volume flow * ▪ Target mass flow * ▪ Carrier mass flow * ▪ Target volume flow * ▪ Carrier volume flow * ▪ Target corrected volume flow * ▪ Carrier corrected volume flow * ▪ Density ▪ Reference density * ▪ Reference density alternative * ▪ GSV flow * ▪ GSV flow alternative * ▪ NSV flow * ▪ NSV flow alternative * ▪ S&W volume flow * ▪ Water cut * ▪ Oil density * ▪ Water density * ▪ Oil mass flow * ▪ Water mass flow * ▪ Oil volume flow * ▪ Water volume flow * ▪ Oil corrected volume flow * ▪ Water corrected volume flow * ▪ Concentration * ▪ Temperature ▪ Totalizer 1 ▪ Totalizer 2 ▪ Totalizer 3 ▪ Oscillation damping ▪ Pressure ▪ Application specific output 0 * ▪ Application specific output 1 * ▪ Index inhomogeneous medium ▪ Index suspended bubbles *	–
Assign diagnostic behavior	In the **Relay output function** parameter, the **Diagnostic behavior** option is selected.	Select diagnostic behavior for switch output.	▪ Alarm ▪ Alarm or warning ▪ Warning	–
Assign status	In the **Relay output function** parameter, the **Digital Output** option is selected.	Select device status for switch output.	▪ Partially filled pipe detection ▪ Low flow cut off ▪ Profinet Slot 24 * ▪ Profinet Slot 25 * ▪ Profinet Slot 26 *	–

Parameter	Prerequisite	Description	User interface / Selection / User entry	Factory setting
Switch-off value	The **Limit** option is selected in the **Relay output function** parameter.	Enter measured value for the switch-off point.	Signed floating-point number	Depends on country: ▪ 0 kg/h ▪ 0 lb/min
Switch-off delay	In the **Relay output function** parameter, the **Limit** option is selected.	Define delay for the switch-off of status output.	0.0 to 100.0 s	–
Switch-on value	The **Limit** option is selected in the **Relay output function** parameter.	Enter measured value for the switch-on point.	Signed floating-point number	Depends on country: ▪ 0 kg/h ▪ 0 lb/min
Switch-on delay	In the **Relay output function** parameter, the **Limit** option is selected.	Define delay for the switch-on of status output.	0.0 to 100.0 s	–
Failure mode	–	Define output behavior in alarm condition.	▪ Actual status ▪ Open ▪ Closed	–
Switch status	–	Shows the current relay switch status.	▪ Open ▪ Closed	–
Powerless relay status	–	Select quietscent state for relay.	▪ Open ▪ Closed	–

* Visibility depends on order options or device settings

10.6.12 Configuring the local display

The **Display** wizard guides you systematically through all the parameters that can configured for configuring the local display.

Navigation
"Setup" menu → Display

▶ Display	
Format display	→ 📄 118
Value 1 display	→ 📄 119
0% bargraph value 1	→ 📄 120
100% bargraph value 1	→ 📄 120
Value 2 display	→ 📄 120
Value 3 display	→ 📄 120
0% bargraph value 3	→ 📄 120
100% bargraph value 3	→ 📄 120
Value 4 display	→ 📄 120

Parameter overview with brief description

Parameter	Prerequisite	Description	Selection / User entry	Factory setting
Format display	A local display is provided.	Select how measured values are shown on the display.	▪ 1 value, max. size ▪ 1 bargraph + 1 value ▪ 2 values ▪ 1 value large + 2 values ▪ 4 values	–

Parameter	Prerequisite	Description	Selection / User entry	Factory setting
Value 1 display	A local display is provided.	Select the measured value that is shown on the local display.	▪ Mass flow ▪ Volume flow ▪ Corrected volume flow * ▪ Density ▪ Reference density * ▪ Temperature ▪ Current output 1 * ▪ Current output 2 * ▪ Current output 4 * ▪ Pressure ▪ Totalizer 1 ▪ Totalizer 2 ▪ Totalizer 3 ▪ GSV flow * ▪ GSV flow alternative * ▪ NSV flow * ▪ NSV flow alternative * ▪ S&W volume flow * ▪ Reference density alternative * ▪ Weighted density average * ▪ Weighted temperature average * ▪ Water cut * ▪ Oil density * ▪ Water density * ▪ Oil mass flow * ▪ Water mass flow * ▪ Oil volume flow * ▪ Water volume flow * ▪ Oil corrected volume flow * ▪ Water corrected volume flow * ▪ Concentration * ▪ Target mass flow * ▪ Carrier mass flow * ▪ Target volume flow * ▪ Carrier volume flow * ▪ Target corrected volume flow * ▪ Carrier corrected volume flow * ▪ Current output 1 * ▪ Current output 2 * ▪ Current output 4 * ▪ Index inhomogeneous medium ▪ Application specific output 0 * ▪ Application specific output 1 * ▪ HBSI * ▪ Exciter current 0 ▪ Oscillation damping 0 ▪ Oscillation damping fluctuation 0 *	–

Parameter	Prerequisite	Description	Selection / User entry	Factory setting
			▪ Oscillation frequency 0 ▪ Frequency fluctuation 0 * ▪ Oscillation amplitude 0 * ▪ Signal asymmetry ▪ Carrier pipe temperature * ▪ Electronic temperature ▪ Current output 1 * ▪ Current output 2 * ▪ Current output 3 * ▪ Index suspended bubbles *	
0% bargraph value 1	A local display is provided.	Enter 0% value for bar graph display.	Signed floating-point number	Country-specific: ▪ 0 kg/h ▪ 0 lb/min
100% bargraph value 1	A local display is provided.	Enter 100% value for bar graph display.	Signed floating-point number	Depends on country and nominal diameter
Value 2 display	A local display is provided.	Select the measured value that is shown on the local display.	For the picklist, see **Value 1 display** parameter (→ 🗎 119)	–
Value 3 display	A local display is provided.	Select the measured value that is shown on the local display.	For the picklist, see **Value 1 display** parameter (→ 🗎 119)	–
0% bargraph value 3	A selection was made in the **Value 3 display** parameter.	Enter 0% value for bar graph display.	Signed floating-point number	Country-specific: ▪ 0 kg/h ▪ 0 lb/min
100% bargraph value 3	A selection was made in the **Value 3 display** parameter.	Enter 100% value for bar graph display.	Signed floating-point number	–
Value 4 display	A local display is provided.	Select the measured value that is shown on the local display.	For the picklist, see **Value 1 display** parameter (→ 🗎 119)	–
Value 5 display	A local display is provided.	Select the measured value that is shown on the local display.	For the picklist, see **Value 1 display** parameter (→ 🗎 119)	–
Value 6 display	A local display is provided.	Select the measured value that is shown on the local display.	For the picklist, see **Value 1 display** parameter (→ 🗎 119)	–
Value 7 display	A local display is provided.	Select the measured value that is shown on the local display.	For the picklist, see **Value 1 display** parameter (→ 🗎 119)	–
Value 8 display	A local display is provided.	Select the measured value that is shown on the local display.	For the picklist, see **Value 1 display** parameter (→ 🗎 119)	–

* Visibility depends on order options or device settings

10.6.13 Configuring the low flow cut off

The **Low flow cut off** wizard systematically guides the user through all the parameters that must be set to configure low flow cut off.

Navigation
"Setup" menu → Low flow cut off

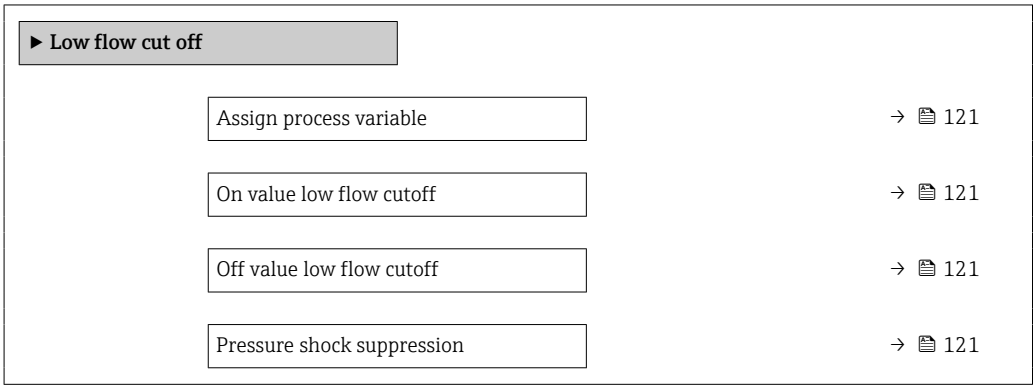

Parameter overview with brief description

Parameter	Prerequisite	Description	Selection / User entry	Factory setting
Assign process variable	–	Select process variable for low flow cut off.	▪ Off ▪ Mass flow ▪ Volume flow ▪ Corrected volume flow *	–
On value low flow cutoff	A process variable is selected in the **Assign process variable** parameter (→ 121).	Enter on value for low flow cut off.	Positive floating-point number	Depends on country and nominal diameter
Off value low flow cutoff	A process variable is selected in the **Assign process variable** parameter (→ 121).	Enter off value for low flow cut off.	0 to 100.0 %	–
Pressure shock suppression	A process variable is selected in the **Assign process variable** parameter (→ 121).	Enter time frame for signal suppression (= active pressure shock suppression).	0 to 100 s	–

* Visibility depends on order options or device settings

10.6.14 Partially filled pipe detection

The **Partial filled pipe detection** wizard guides you systematically through all parameters that have to be set for configuring the monitoring of the pipe filling.

Navigation
"Setup" menu → Partially filled pipe detection

▶ **Partially filled pipe detection**	
Assign process variable	→ 🗎 122
Low value partial filled pipe detection	→ 🗎 122
High value partial filled pipe detection	→ 🗎 122
Response time part. filled pipe detect.	→ 🗎 122

Parameter overview with brief description

Parameter	Prerequisite	Description	Selection / User entry	Factory setting
Assign process variable	–	Select process variable for partially filled pipe detection.	▪ Off ▪ Density ▪ Reference density	Density
Low value partial filled pipe detection	A process variable is selected in the **Assign process variable** parameter (→ 🗎 122).	Enter lower limit value for deactivating partialy filled pipe detection.	Signed floating-point number	Depends on country: ▪ 200 kg/m^3 ▪ 12.5 lb/ft^3
High value partial filled pipe detection	A process variable is selected in the **Assign process variable** parameter (→ 🗎 122).	Enter upper limit value for deactivating partialy filled pipe detection.	Signed floating-point number	Depends on country: ▪ 6000 kg/m^3 ▪ 374.6 lb/ft^3
Response time part. filled pipe detect.	A process variable is selected in the **Assign process variable** parameter (→ 🗎 122).	Use this function to enter the minimum time (hold time) the signal must be present before diagnostic message S962 "Pipe only partly filled" is triggered in the event of a partially filled or empty measuring pipe.	0 to 100 s	–

10.7 Advanced settings

The **Advanced setup** submenu with its submenus contains parameters for specific settings.

Navigation to the "Advanced setup" submenu

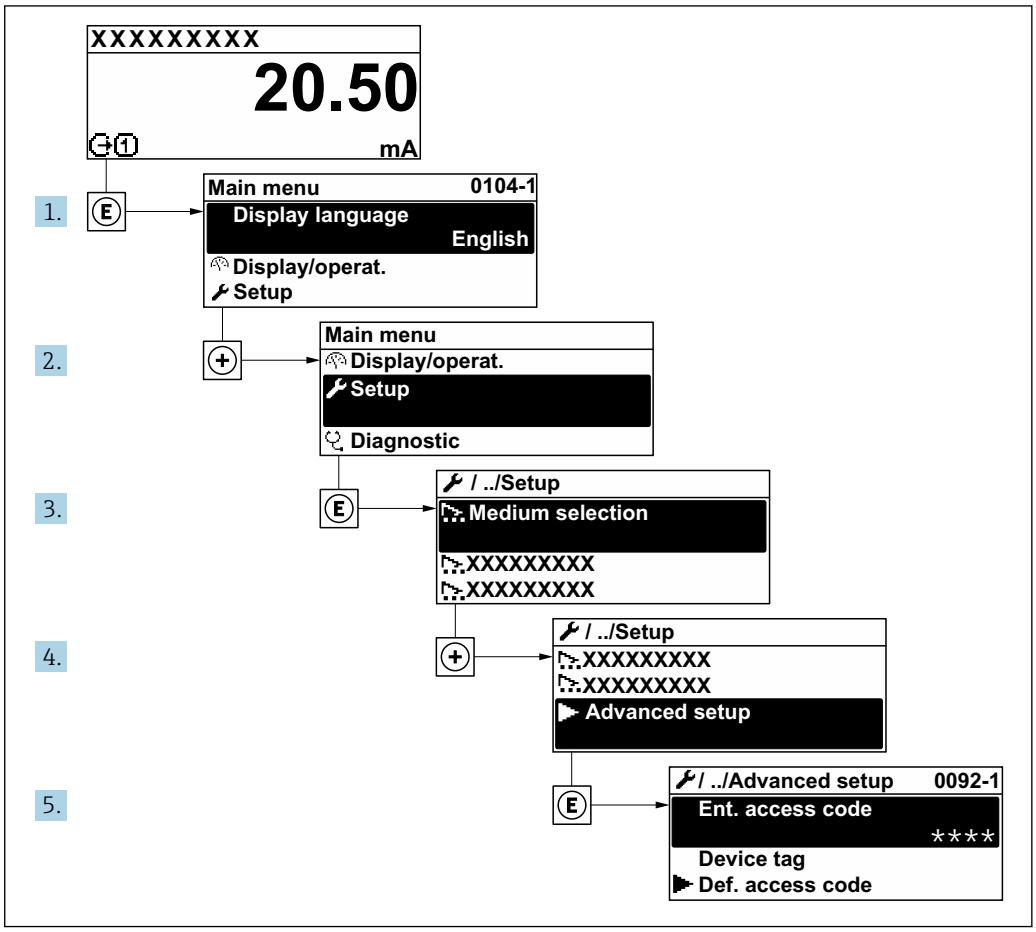

The number of submenus and parameters can vary depending on the device version and the available application packages. These submenus and their parameters are explained in the Special Documentation for the device and not in Operating Instructions.

For detailed information on the parameter descriptions for application packages or for operation in custody transfer mode: Special Documentation for the device → 📄 275

Navigation
"Setup" menu → Advanced setup

▶ **Advanced setup**	
Enter access code (0003)	→ 📄 124
▶ **Calculated values**	→ 📄 124
▶ **Sensor adjustment**	→ 📄 126

▶ Totalizer 1 to n	→ 129
▶ Display	→ 131
▶ WLAN settings	→ 135
▶ Viscosity	→ 137
▶ Concentration	→ 137
▶ Petroleum	→ 137
▶ Heartbeat setup	→ 138
▶ Configuration backup	→ 138
▶ Administration	→ 139

10.7.1 Using the parameter to enter the access code

Navigation
"Setup" menu → Advanced setup

Parameter overview with brief description

Parameter	Description	User entry
Enter access code	Enter access code to disable write protection of parameters.	Max. 16-digit character string comprising numbers, letters and special characters

10.7.2 Calculated process variables

The **Calculated values** submenu contains parameters for calculating the corrected volume flow.

The **Calculated values** submenu is **not** available if one of the following options was selected in the **Petroleum mode** parameter in the "Application package", option **EJ** "Petroleum": **API referenced correction** option, **Net oil & water cut** option or **ASTM D4311** option

Navigation
"Setup" menu → Advanced setup → Calculated values

▶ Calculated values	
▶ Corrected volume flow calculation	→ 125

"Corrected volume flow calculation" submenu

Navigation
"Setup" menu → Advanced setup → Calculated values → Corrected volume flow calculation

▶ Corrected volume flow calculation	
Corrected volume flow calculation (1812)	→ 🗎 125
External reference density (6198)	→ 🗎 125
Fixed reference density (1814)	→ 🗎 125
Reference temperature (1816)	→ 🗎 125
Linear expansion coefficient (1817)	→ 🗎 126
Square expansion coefficient (1818)	→ 🗎 126

Parameter overview with brief description

Parameter	Prerequisite	Description	Selection / User interface / User entry	Factory setting
Corrected volume flow calculation	–	Select reference density for calculating the corrected volume flow.	▪ Fixed reference density ▪ Calculated reference density ▪ External reference density ▪ Current input 1 * ▪ Current input 2 *	–
External reference density	In the **Corrected volume flow calculation** parameter, the **External reference density** option is selected.	Shows external reference density.	Floating point number with sign	–
Fixed reference density	The **Fixed reference density** option is selected in the **Corrected volume flow calculation** parameter parameter.	Enter fixed value for reference density.	Positive floating-point number	–
Reference temperature	The **Calculated reference density** option is selected in the **Corrected volume flow calculation** parameter parameter.	Enter reference temperature for calculating the reference density.	−273.15 to 99 999 °C	Country-specific: ▪ +20 °C ▪ +68 °F

Parameter	Prerequisite	Description	Selection / User interface / User entry	Factory setting
Linear expansion coefficient	The **Calculated reference density** option is selected in the **Corrected volume flow calculation** parameter parameter.	Enter linear, medium-specific expansion coefficient for calculating the reference density.	Signed floating-point number	–
Square expansion coefficient	The **Calculated reference density** option is selected in the **Corrected volume flow calculation** parameter parameter.	For media with a non-linear expansion pattern: enter the quadratic, medium-specific expansion coefficient for calculating the reference density.	Signed floating-point number	–

* Visibility depends on order options or device settings

10.7.3 Carrying out a sensor adjustment

The **Sensor adjustment** submenu contains parameters that pertain to the functionality of the sensor.

Navigation

"Setup" menu → Advanced setup → Sensor adjustment

▶ **Sensor adjustment**		
	Installation direction	→ 📄 126
	▶ **Zero verification**	→ 📄 127
	▶ **Zero adjustment**	→ 📄 128

Parameter overview with brief description

Parameter	Description	Selection
Installation direction	Set sign of flow direction to match the direction of the arrow on the sensor.	▪ Flow in arrow direction ▪ Flow against arrow direction

Zero verification and zero adjustment

All measuring instruments are calibrated in accordance with state-of-the-art technology. Calibration takes place under reference conditions → 📄 255. Therefore, a zero adjustment in the field is generally not required.

Experience shows that zero adjustment is advisable only in special cases:
- To achieve maximum measurement accuracy even with low flow rates.
- Under extreme process or operating conditions (e.g. very high process temperatures or very high-viscosity media).
- For gas applications with low pressure.

ℹ To achieve the highest possible measurement accuracy at low flow rates, the installation must protect the sensor from mechanical stress during operation.

To get a representative zero point, ensure that:
- any flow in the device is prevented during the adjustment
- the process conditions (e.g. pressure, temperature) are stable and representative

Zero verification and zero adjustment cannot be performed if the following process conditions are present:

- Gas pockets
  Ensure that the system has been sufficiently flushed with the medium. Repeat flushing can help to eliminate gas pockets
- Thermal circulation
  In the event of temperature differences (e.g. between the measuring tube inlet and outlet section), induced flow can occur even if the valves are closed due to thermal circulation in the device
- Leaks at the valves
  If the valves are not leak-tight, flow is not sufficiently prevented when determining the zero point

If these conditions cannot be avoided, it is advisable to keep the factory setting for the zero point.

Zero point verification

The zero point can be verified with the **Zero verification** wizard.

Navigation
"Setup" menu → Advanced setup → Sensor adjustment → Zero verification

▶ Zero verification	
Process conditions	→ 📄 127
Progress	→ 📄 127
Status	→ 📄 128
Additional information	→ 📄 128
Recommendation:	→ 📄 128
Root cause	→ 📄 128
Abort cause	→ 📄 128
Zero point measured	→ 📄 128
Zero point standard deviation	→ 📄 128

Parameter overview with brief description

Parameter	Description	Selection / User interface	Factory setting
Process conditions	Ensure process conditions as follows.	▪ Tubes are completely filled ▪ Process operational pressure applied ▪ No-flow conditions (closed valves) ▪ Process and ambient temperatures stable	–
Progress	Shows the progress of the process.	0 to 100 %	–

Parameter	Description	Selection / User interface	Factory setting
Zero point adjustment status	Shows the status of the zero point adjustment.	▪ Busy ▪ Zero point adjust failure ▪ Ok	–
Additional information	Indicate whether to display additional information.	▪ Hide ▪ Show	–
Recommendation:	Indicates whether an adjustment is recommended. Only recommended if the measured zero point deviates significantly from the current zero point.	▪ Do not adjust zero point ▪ Adjust zero point	–
Abort cause	Indicates why the wizard was aborted.	▪ Check process conditions! ▪ A technical issue has occurred	–
Root cause	Shows the diagnostic and remedy.	▪ Zero point too high. Ensure no-flow. ▪ Zero point is unstable. Ensure no-flow. ▪ Fluctuation high. Avoid 2-phase medium.	–
Zero point measured	Shows the zero point measured for the adjustment.	Signed floating-point number	–
Zero point standard deviation	Shows the standard deviation of the zero point measured.	Positive floating-point number	–

Zero adjust

The zero point can be adjusted with the **Zero adjustment** wizard.

- A zero point verification should be performed before a zero adjustment.
- The zero point can also be adjusted manually: Expert → Sensor → Calibration

Navigation
"Setup" menu → Advanced setup → Sensor adjustment → Zero adjustment

▶ **Zero adjustment**

Process conditions	→ 129
Progress	→ 129
Status	→ 129
Root cause	→ 129
Abort cause	→ 129
Root cause	→ 129
Reliability of measured zero point	→ 129
Additional information	→ 129
Reliability of measured zero point	→ 129

Zero point measured	→ 📄 129
Zero point standard deviation	→ 📄 129
Select action	→ 📄 129

Parameter overview with brief description

Parameter	Description	Selection / User interface	Factory setting
Process conditions	Ensure process conditions as follows.	▪ Tubes are completely filled ▪ Process operational pressure applied ▪ No-flow conditions (closed valves) ▪ Process and ambient temperatures stable	–
Progress	Shows the progress of the process.	0 to 100 %	–
Zero point adjustment status	Shows the status of the zero point adjustment.	▪ Busy ▪ Zero point adjust failure ▪ Ok	–
Abort cause	Indicates why the wizard was aborted.	▪ Check process conditions! ▪ A technical issue has occurred	–
Root cause	Shows the diagnostic and remedy.	▪ Zero point too high. Ensure no-flow. ▪ Zero point is unstable. Ensure no-flow. ▪ Fluctuation high. Avoid 2-phase medium.	–
Reliability of measured zero point	Indicates the reliability of the zero point measured.	▪ Not done ▪ Good ▪ Uncertain	–
Additional information	Indicate whether to display additional information.	▪ Hide ▪ Show	–
Zero point measured	Shows the zero point measured for the adjustment.	Signed floating-point number	–
Zero point standard deviation	Shows the standard deviation of the zero point measured.	Positive floating-point number	–
Select action	Select the zero point value to apply.	▪ Keep current zero point ▪ Apply zero point measured ▪ Apply factory zero point *	–

* Visibility depends on order options or device settings

10.7.4 Configuring the totalizer

In the **"Totalizer 1 to n" submenu**, you can configure the specific totalizer.

Navigation
"Setup" menu → Advanced setup → Totalizer 1 to n

▶ **Totalizer 1 to n**	
Assign process variable	→ 📄 130

Unit totalizer	→ 130
Totalizer operation mode	→ 130
Failure mode	→ 130

Parameter overview with brief description

Parameter	Description	Selection	Factory setting
Assign process variable	Select process variable for totalizer.	▪ Volume flow ▪ Mass flow ▪ Corrected volume flow	–
Unit totalizer	Select the unit for the process variable of the totalizer.	Unit choose list	Country-specific: ▪ kg ▪ lb
Totalizer operation mode	Select totalizer calculation mode.	▪ Net flow total ▪ Forward flow total ▪ Reverse flow total ▪ Last valid value	–
Failure mode	Define the totalizer behavior in the event of a device alarm.	▪ Stop ▪ Actual value ▪ Last valid value	–

10.7.5 Carrying out additional display configurations

In the **Display** submenu you can set all the parameters associated with the configuration of the local display.

Navigation
"Setup" menu → Advanced setup → Display

▶ Display	
Format display	→ 132
Value 1 display	→ 133
0% bargraph value 1	→ 134
100% bargraph value 1	→ 134
Decimal places 1	→ 134
Value 2 display	→ 134
Decimal places 2	→ 134
Value 3 display	→ 134
0% bargraph value 3	→ 134
100% bargraph value 3	→ 134
Decimal places 3	→ 134
Value 4 display	→ 134
Decimal places 4	→ 134
Display language	→ 135
Display interval	→ 135
Display damping	→ 135
Header	→ 135
Header text	→ 135
Separator	→ 135
Backlight	→ 135

Parameter overview with brief description

Parameter	Prerequisite	Description	Selection / User entry	Factory setting
Format display	A local display is provided.	Select how measured values are shown on the display.	▪ 1 value, max. size ▪ 1 bargraph + 1 value ▪ 2 values ▪ 1 value large + 2 values ▪ 4 values	–

Parameter	Prerequisite	Description	Selection / User entry	Factory setting
Value 1 display	A local display is provided.	Select the measured value that is shown on the local display.	▪ Mass flow ▪ Volume flow ▪ Corrected volume flow * ▪ Density ▪ Reference density * ▪ Temperature ▪ Current output 1 * ▪ Current output 2 * ▪ Current output 4 * ▪ Pressure ▪ Totalizer 1 ▪ Totalizer 2 ▪ Totalizer 3 ▪ GSV flow * ▪ GSV flow alternative * ▪ NSV flow * ▪ NSV flow alternative * ▪ S&W volume flow * ▪ Reference density alternative * ▪ Weighted density average * ▪ Weighted temperature average * ▪ Water cut * ▪ Oil density * ▪ Water density * ▪ Oil mass flow * ▪ Water mass flow * ▪ Oil volume flow * ▪ Water volume flow * ▪ Oil corrected volume flow * ▪ Water corrected volume flow * ▪ Concentration * ▪ Target mass flow * ▪ Carrier mass flow * ▪ Target volume flow * ▪ Carrier volume flow * ▪ Target corrected volume flow * ▪ Carrier corrected volume flow * ▪ Current output 1 * ▪ Current output 2 * ▪ Current output 4 * ▪ Index inhomogeneous medium ▪ Application specific output 0 * ▪ Application specific output 1 * ▪ HBSI * ▪ Exciter current 0 ▪ Oscillation damping 0 ▪ Oscillation damping fluctuation 0 *	–

Parameter	Prerequisite	Description	Selection / User entry	Factory setting
			▪ Oscillation frequency 0 ▪ Frequency fluctuation 0 * ▪ Oscillation amplitude 0 * ▪ Signal asymmetry ▪ Carrier pipe temperature * ▪ Electronic temperature ▪ Current output 1 * ▪ Current output 2 * ▪ Current output 3 * ▪ Index suspended bubbles *	
0% bargraph value 1	A local display is provided.	Enter 0% value for bar graph display.	Signed floating-point number	Country-specific: ▪ 0 kg/h ▪ 0 lb/min
100% bargraph value 1	A local display is provided.	Enter 100% value for bar graph display.	Signed floating-point number	Depends on country and nominal diameter
Decimal places 1	A measured value is specified in the **Value 1 display** parameter.	Select the number of decimal places for the display value.	▪ x ▪ x.x ▪ x.xx ▪ x.xxx ▪ x.xxxx	–
Value 2 display	A local display is provided.	Select the measured value that is shown on the local display.	For the picklist, see **Value 1 display** parameter (→ 🗎 119)	–
Decimal places 2	A measured value is specified in the **Value 2 display** parameter.	Select the number of decimal places for the display value.	▪ x ▪ x.x ▪ x.xx ▪ x.xxx ▪ x.xxxx	–
Value 3 display	A local display is provided.	Select the measured value that is shown on the local display.	For the picklist, see **Value 1 display** parameter (→ 🗎 119)	–
0% bargraph value 3	A selection was made in the **Value 3 display** parameter.	Enter 0% value for bar graph display.	Signed floating-point number	Country-specific: ▪ 0 kg/h ▪ 0 lb/min
100% bargraph value 3	A selection was made in the **Value 3 display** parameter.	Enter 100% value for bar graph display.	Signed floating-point number	–
Decimal places 3	A measured value is specified in the **Value 3 display** parameter.	Select the number of decimal places for the display value.	▪ x ▪ x.x ▪ x.xx ▪ x.xxx ▪ x.xxxx	–
Value 4 display	A local display is provided.	Select the measured value that is shown on the local display.	For the picklist, see **Value 1 display** parameter (→ 🗎 119)	–
Decimal places 4	A measured value is specified in the **Value 4 display** parameter.	Select the number of decimal places for the display value.	▪ x ▪ x.x ▪ x.xx ▪ x.xxx ▪ x.xxxx	–

Parameter	Prerequisite	Description	Selection / User entry	Factory setting
Display language	A local display is provided.	Set display language.	▪ English ▪ Deutsch ▪ Français ▪ Español ▪ Italiano ▪ Nederlands ▪ Portuguesa ▪ Polski ▪ русский язык (Russian) ▪ Svenska ▪ Türkçe ▪ 中文 (Chinese) ▪ 日本語 (Japanese) ▪ 한국어 (Korean) ▪ tiếng Việt (Vietnamese) ▪ čeština (Czech)	English (alternatively, the ordered language is preset in the device)
Display interval	A local display is provided.	Set time measured values are shown on display if display alternates between values.	1 to 10 s	–
Display damping	A local display is provided.	Set display reaction time to fluctuations in the measured value.	0.0 to 999.9 s	–
Header	A local display is provided.	Select header contents on local display.	▪ Device tag ▪ Free text	–
Header text	The **Free text** option is selected in the **Header** parameter.	Enter display header text.	Max. 12 characters, such as letters, numbers or special characters (e.g. @, %, /)	–
Separator	A local display is provided.	Select decimal separator for displaying numerical values.	▪ . (point) ▪ , (comma)	. (point)
Backlight	One of the following conditions is met: ▪ Order code for "Display; operation", option **F** "4-line, illum.; touch control" ▪ Order code for "Display; operation", option **G** "4-line, illum.; touch control +WLAN" ▪ Order code for "Display; operation", option **O** "Remote display 4-line illuminated; 10m/30ft cable; touch control"	Switch the local display backlight on and off.	▪ Disable ▪ Enable	–

* Visibility depends on order options or device settings

10.7.6 WLAN configuration

The **WLAN Settings** submenu guides the user systematically through all the parameters that have to be set for the WLAN configuration.

Navigation
"Setup" menu → Advanced setup → WLAN settings

▶ WLAN settings	
WLAN	→ 📄 136
WLAN mode	→ 📄 136
SSID name	→ 📄 136
Network security	→ 📄 136
Security identification	→ 📄 137
User name	→ 📄 137
WLAN password	→ 📄 137
WLAN IP address	→ 📄 137
WLAN passphrase	→ 📄 137
Assign SSID name	→ 📄 137
SSID name	→ 📄 137
Connection state	→ 📄 137
Received signal strength	→ 📄 137

Parameter overview with brief description

Parameter	Prerequisite	Description	Selection / User entry / User interface	Factory setting
WLAN	–	Switch WLAN on and off.	▪ Disable ▪ Enable	–
WLAN mode	–	Select WLAN mode.	▪ WLAN access point ▪ WLAN Client	–
SSID name	The client is activated.	Enter the user-defined SSID name (max. 32 characters).	–	–
Network security	–	Select the security type of the WLAN network.	▪ Unsecured ▪ WPA2-PSK ▪ EAP-PEAP with MSCHAPv2 * ▪ EAP-PEAP MSCHAPv2 no server authentic. * ▪ EAP-TLS *	–

Parameter	Prerequisite	Description	Selection / User entry / User interface	Factory setting
Security identification	–	Select security settings and download these settings via menu Data management > Security > WLAN.	▪ Trusted issuer certificate ▪ Device certificate ▪ Device private key	–
User name	–	Enter user name.	–	–
WLAN password	–	Enter WLAN password.	–	–
WLAN IP address	–	Enter IP address of the WLAN interface of the device.	4 octet: 0 to 255 (in the particular octet)	–
WLAN passphrase	The **WPA2-PSK** option is selected in the **Security type** parameter.	Enter the network key (8 to 32 characters). The network key supplied with the device should be changed during commissioning for security reasons.	8 to 32-digit character string comprising numbers, letters and special characters (without spaces)	Serial number of the measuring device (e.g. L100A802000)
Assign SSID name	–	Select which name will be used for SSID: device tag or user-defined name.	▪ Device tag ▪ User-defined	–
SSID name	▪ The **User-defined** option is selected in the **Assign SSID name** parameter. ▪ The **WLAN access point** option is selected in the **WLAN mode** parameter.	Enter the user-defined SSID name (max. 32 characters). The user-defined SSID name may only be assigned once. If the SSID name is assigned more than once, the devices can interfere with one another.	Max. 32-digit character string comprising numbers, letters and special characters	EH_device designation_last 7 digits of the serial number (e.g. EH_Promass_300_A802000)
Connection state	–	Displays the connection status.	▪ Connected ▪ Not connected	–
Received signal strength	–	Shows the received signal strength.	▪ Low ▪ Medium ▪ High	–

* Visibility depends on order options or device settings

10.7.7 Viscosity application package

For detailed information on the parameter descriptions for the Viscosity application package, see the Special Documentation for the device → 📄 275

Navigation
"Setup" menu → Advanced setup → Viscosity

10.7.8 Concentration Measurement application package

For detailed information on the parameter descriptions for the Concentration application package, see the Special Documentation for the device → 📄 275

Navigation
"Setup" menu → Advanced setup → Concentration

10.7.9 Petroleum application package

For detailed information on the parameter descriptions for the Petroleum application package, see the Special Documentation for the device → 📄 275

Navigation
"Setup" menu → Advanced setup → Petroleum

10.7.10 Heartbeat Technology application package

For detailed information on the parameter descriptions of the application packages, see the Special Documentation for the device. → 📄 275

Navigation
"Setup" menu → Advanced setup → Heartbeat setup

10.7.11 Configuration management

After commissioning, you can save the current device configurationor restore the previous device configuration. The device configuration is managed via the **Configuration management** parameter.

Navigation
"Setup" menu → Advanced setup → Configuration backup

▶ Configuration backup	
Operating time	→ 📄 138
Last backup	→ 📄 138
Configuration management	→ 📄 138
Backup state	→ 📄 139
Comparison result	→ 📄 139

Parameter overview with brief description

Parameter	Description	User interface / Selection
Operating time	Indicates how long the device has been in operation.	Days (d), hours (h), minutes (m) and seconds (s)
Last backup	Shows when the last data backup was saved to HistoROM backup.	Days (d), hours (h), minutes (m) and seconds (s)
Configuration management	Select action for managing the device data in the HistoROM backup.	▪ Cancel ▪ Execute backup ▪ Restore * ▪ Compare * ▪ Clear backup data

Parameter	Description	User interface / Selection
Backup state	Shows the current status of data saving or restoring.	▪ None ▪ Backup in progress ▪ Restoring in progress ▪ Delete in progress ▪ Compare in progress ▪ Restoring failed ▪ Backup failed
Comparison result	Comparison of current device data with HistoROM backup.	▪ Settings identical ▪ Settings not identical ▪ No backup available ▪ Backup settings corrupt ▪ Check not done ▪ Dataset incompatible

* Visibility depends on order options or device settings

Function range of "Configuration management" parameter

Options	Description
Cancel	No action is executed and the user exits the parameter.
Execute backup	A backup copy of the current device configuration is saved from the HistoROM backup to the memory of the device. The backup copy includes the transmitter data of the device.
Restore	The last backup copy of the device configuration is restored from the display module from the device memory to the device's HistoROM backup. The backup copy includes the transmitter data of the device.
Compare	The device configuration saved in the device memory is compared with the current device configuration of the HistoROM backup.
Clear backup data	The backup copy of the device configuration is deleted from the memory of the device.

HistoROM backup
A HistoROM is a "non-volatile" device memory in the form of an EEPROM.

While this action is in progress, the configuration cannot be edited via the local display and a message on the processing status appears on the display.

10.7.12 Using parameters for device administration

The **Administration** submenu systematically guides the user through all the parameters that can be used for device administration purposes.

Navigation

"Setup" menu → Advanced setup → Administration

▶ **Administration**	
▶ **Define access code**	→ 📄 140
▶ **Reset access code**	→ 📄 140
Device reset	→ 📄 141

Using the parameter to define the access code

Navigation
"Setup" menu → Advanced setup → Administration → Define access code

▶ Define access code	
Define access code	→ 📄 140
Confirm access code	→ 📄 140

Parameter overview with brief description

Parameter	Description	User entry
Define access code	Restrict write-access to parameters to protect the configuration of the device against unintentional changes.	Max. 16-digit character string comprising numbers, letters and special characters
Confirm access code	Confirm the entered access code.	Max. 16-digit character string comprising numbers, letters and special characters

Using the parameter to reset the access code

Navigation
"Setup" menu → Advanced setup → Administration → Reset access code

▶ Reset access code	
Operating time	→ 📄 140
Reset access code	→ 📄 140

Parameter overview with brief description

Parameter	Description	User interface / User entry
Operating time	Indicates how long the device has been in operation.	Days (d), hours (h), minutes (m) and seconds (s)
Reset access code	Reset access code to factory settings. ℹ For a reset code, contact your Endress+Hauser service organization. The reset code can only be entered via: ▪ Web browser ▪ DeviceCare, FieldCare (via CDI-RJ45 service interface) ▪ Fieldbus	Character string comprising numbers, letters and special characters

Using the parameter to reset the device

Navigation
"Setup" menu → Advanced setup → Administration

Parameter overview with brief description

Parameter	Description	Selection
Device reset	Reset the device configuration - either entirely or in part - to a defined state.	▪ Cancel ▪ To delivery settings ▪ Restart device ▪ Restore S-DAT backup *

* Visibility depends on order options or device settings

10.8 Simulation

Via the **Simulation** submenu, it is possible to simulate various process variables in the process and the device alarm mode and verify downstream signal chains (switching valves or closed-control loops). The simulation can be performed without a real measurement (no flow of medium through the device).

Navigation
"Diagnostics" menu → Simulation

▶ Simulation	
Assign simulation process variable	→ 142
Process variable value	→ 142
Status input simulation 1 to n	→ 143
Input signal level 1 to n	→ 143
Current input 1 to n simulation	→ 143
Value current input 1 to n	→ 143
Current output 1 to n simulation	→ 142
Value current output 1 to n	→ 142
Frequency output simulation 1 to n	→ 142
Frequency value 1 to n	→ 142
Pulse output simulation 1 to n	→ 143
Pulse value 1 to n	→ 143
Switch output simulation 1 to n	→ 143
Switch status 1 to n	→ 143
Relay output 1 to n simulation	→ 143

Switch status 1 to n	→ 143
Device alarm simulation	→ 143
Diagnostic event category	→ 143
Diagnostic event simulation	→ 143

Parameter overview with brief description

Parameter	Prerequisite	Description	Selection / User entry
Assign simulation process variable	–	Select a process variable for the simulation process that is activated.	▪ Off ▪ Mass flow ▪ Volume flow ▪ Corrected volume flow * ▪ Target mass flow * ▪ Carrier mass flow * ▪ Target volume flow * ▪ Carrier volume flow * ▪ Target corrected volume flow * ▪ Carrier corrected volume flow * ▪ Density ▪ Reference density * ▪ Reference density alternative * ▪ GSV flow * ▪ GSV flow alternative * ▪ NSV flow * ▪ NSV flow alternative * ▪ S&W volume flow * ▪ Water cut * ▪ Oil density * ▪ Water density * ▪ Oil mass flow * ▪ Water mass flow * ▪ Oil volume flow * ▪ Water volume flow * ▪ Oil corrected volume flow * ▪ Water corrected volume flow * ▪ Temperature ▪ Concentration *
Process variable value	A process variable is selected in the **Assign simulation process variable** parameter (→ 142).	Enter the simulation value for the selected process variable.	Depends on the process variable selected
Current output 1 to n simulation	–	Switch the simulation of the current output on and off.	▪ Off ▪ On
Value current output 1 to n	In the **Current output 1 to n simulation** parameter, the **On** option is selected.	Enter the current value for simulation.	3.59 to 22.5 mA
Frequency output simulation 1 to n	In the **Operating mode** parameter, the **Frequency** option is selected.	Switch the simulation of the frequency output on and off.	▪ Off ▪ On
Frequency value 1 to n	In the **Frequency output simulation 1 to n** parameter, the **On** option is selected.	Enter the frequency value for the simulation.	0.0 to 12 500.0 Hz

Parameter	Prerequisite	Description	Selection / User entry
Pulse output simulation 1 to n	In the **Operating mode** parameter, the **Pulse** option is selected.	Set and switch off the pulse output simulation. For **Fixed value** option: **Pulse width** parameter (→ 106) defines the pulse width of the pulses output.	▪ Off ▪ Fixed value ▪ Down-counting value
Pulse value 1 to n	In the **Pulse output simulation 1 to n** parameter, the **Down-counting value** option is selected.	Enter the number of pulses for simulation.	0 to 65 535
Switch output simulation 1 to n	In the **Operating mode** parameter, the **Switch** option is selected.	Switch the simulation of the switch output on and off.	▪ Off ▪ On
Switch status 1 to n	–	Select the status of the status output for the simulation.	▪ Open ▪ Closed
Relay output 1 to n simulation	–	Switch simulation of the relay output on and off.	▪ Off ▪ On
Switch status 1 to n	The **On** option is selected in the **Switch output simulation 1 to n** parameter parameter.	Select status of the relay output for the simulation.	▪ Open ▪ Closed
Device alarm simulation	–	Switch the device alarm on and off.	▪ Off ▪ On
Diagnostic event category	–	Select a diagnostic event category.	▪ Sensor ▪ Electronics ▪ Configuration ▪ Process
Diagnostic event simulation	–	Select a diagnostic event to simulate this event.	▪ Off ▪ Diagnostic event picklist (depends on the category selected)
Current input 1 to n simulation	–	Switch simulation of the current input on and off.	▪ Off ▪ On
Value current input 1 to n	In the **Current input 1 to n simulation** parameter, the **On** option is selected.	Enter the current value for simulation.	0 to 22.5 mA
Status input simulation 1 to n	–	Switch simulation of the status input on and off.	▪ Off ▪ On
Input signal level 1 to n	In the **Status input simulation** parameter, the **On** option is selected.	Select the signal level for the simulation of the status input.	▪ High ▪ Low

* Visibility depends on order options or device settings

10.9 Protecting settings from unauthorized access

The following write protection options exist in order to protect the configuration of the measuring device from unintentional modification:
- Protect access to parameters via access code → 144
- Protect access to local operation via key locking → 61
- Protect access to measuring device via write protection switch → 145
- Protect access to parameters via startup configuration → 87

10.9.1 Write protection via access code

The effects of the user-specific access code are as follows:
- Via local operation, the parameters for the measuring device configuration are write-protected and their values can no longer be changed.
- Device access is protected via the Web browser, as are the parameters for the measuring device configuration.
- Device access is protected via FieldCare or DeviceCare (via CDI-RJ45 service interface), as are the parameters for the measuring device configuration.

Defining the access code via the local display

1. Navigate to the **Define access code** parameter (→ 🗎 140).
2. Maximum of 16-digit character string comprising numbers, letters and special characters as the access code.
3. Enter the access code again in the **Confirm access code** parameter (→ 🗎 140) to confirm.
   ↳ The 🔒 symbol appears in front of all write-protected parameters.

- Disabling parameter write protection via access code → 🗎 60.
- If the access code is lost: Resetting the access code → 🗎 145.
- The user role with which the user is currently logged in is displayed in **Access status** parameter.
  - Navigation path: Operation → Access status
  - User roles and their access rights → 🗎 60

- The device automatically locks the write-protected parameters again if a key is not pressed for 10 minutes in the navigation and editing view.
- The device locks the write-protected parameters automatically after 60 s if the user skips back to the operational display mode from the navigation and editing view.

Parameters which can always be modified via the local display

Certain parameters that do not affect the measurement are excepted from parameter write protection via the local display. Despite the user-specific access code, they can always be modified, even if the other parameters are locked.

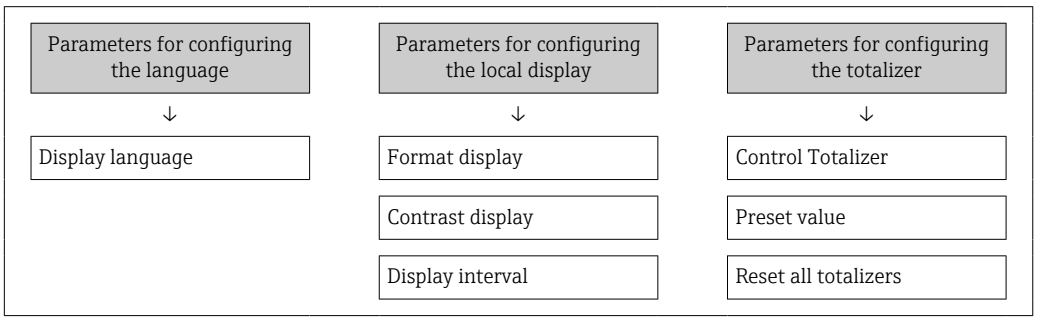

Defining the access code via the web browser

1. Navigate to the **Define access code** parameter (→ 🗎 140).
2. Define a 16-digit (max.) numeric code as the access code.

3. Enter the access code again in the **Confirm access code** parameter (→ 🗎 140) to confirm.
   ↳ The web browser switches to the login page.

- Disabling parameter write protection via access code → 🗎 60.
- If the access code is lost: Resetting the access code → 🗎 145.
- The **Access status** parameter shows which user role the user is currently logged in with.
  - Navigation path: Operation → Access status
  - User roles and their access rights → 🗎 60

If no action is performed for 10 minutes, the web browser automatically returns to the login page.

Resetting the access code

If you misplace the user-specific access code, it is possible to reset the code to the factory setting. A reset code must be entered for this purpose. The user-specific access code can then be defined again afterwards.

Via Web browser, FieldCare, DeviceCare (via CDI-RJ45 service interface), fieldbus

You can only obtain a reset code from your local Endress+Hauser service organization. The code must be calculated explicitly for every device.

1. Note down the serial number of the device.
2. Read off the **Operating time** parameter.
3. Contact the local Endress+Hauser service organization and tell them the serial number and the operating time.
   ↳ Get the calculated reset code.
4. Enter the reset code in the **Reset access code** parameter (→ 🗎 140).
   ↳ The access code has been reset to the factory setting **0000**. It can be redefined → 🗎 144.

For IT security reasons, the calculated reset code is only valid for 96 hours from the specified operating time and for the specific serial number. If you cannot return to the device within 96 hours, you should either increase the operating time you read out by a few days or switch off the device.

10.9.2 Write protection via write protection switch

Unlike parameter write protection via a user-specific access code, this allows the user to lock write access to the entire operating menu - apart from the **"Contrast display" parameter**.

The parameter values are now read only and cannot be edited any more (exception **"Contrast display" parameter**):
- Via local display
- Via PROFINET protocol

1. 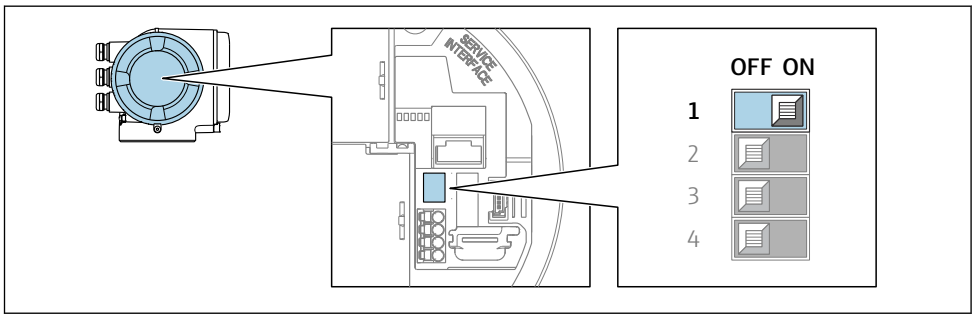

A0029630

Setting the write protection (WP) switch on the main electronics module to the **ON** position enables hardware write protection.

↳ In the **Locking status** parameter, the **Hardware locked** option is displayed → 📄 147. In addition, on the local display the 🔒 symbol appears in front of the parameters in the header of the operational display and in the navigation view.

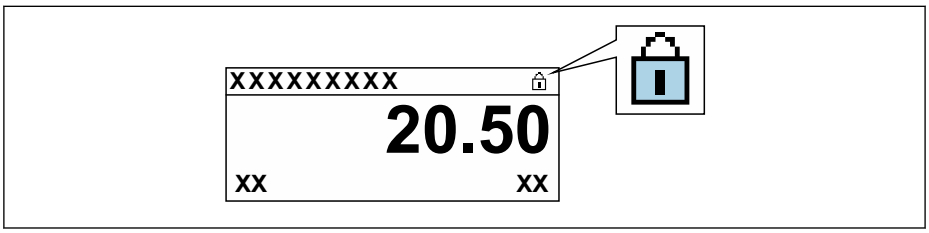

A0029425

2. Setting the write protection (WP) switch on the main electronics module to the **OFF** position (factory setting) disables hardware write protection.

↳ No option is displayed in the **Locking status** parameter → 📄 147. On the local display, the 🔒 symbol disappears from in front of the parameters in the header of the operational display and in the navigation view.

11 Operation

11.1 Reading the device locking status

Device active write protection: **Locking status** parameter

Operation → Locking status

Function scope of the "Locking status" parameter

Options	Description
None	The access authorization displayed in the **Access status** parameter applies → 🗎 60. Only appears on local display.
Hardware locked	The DIP switch for hardware locking is activated on the PCB board. This locks write access to the parameters (e.g. via local display or operating tool) → 🗎 145.
Temporarily locked	Write access to the parameters is temporarily locked on account of internal processes running in the device (e.g. data upload/download, reset, etc.). Once the internal processing has been completed, the parameters can be changed again.

11.2 Adjusting the operating language

Detailed information:
- To configure the operating language → 🗎 89
- For information on the operating languages supported by the measuring device → 🗎 265

11.3 Configuring the display

Detailed information:
- On the basic settings for the local display → 🗎 117
- On the advanced settings for the local display → 🗎 131

11.4 Reading off measured values

With the **Measured values** submenu, it is possible to read all the measured values.

Navigation
"Diagnostics" menu → Measured values

▶ **Measured values**	
▶ **Measured variables**	→ 🗎 148
▶ **Input values**	→ 🗎 158
▶ **Output values**	→ 🗎 160
▶ **Totalizer**	→ 🗎 158

11.4.1 "Measured variables" submenu

The **Measured variables** submenu contains all the parameters needed to display the current measured values for each process variable.

Navigation
"Diagnostics" menu → Measured values → Measured variables

▶ Measured variables	
Mass flow	→ 150
Volume flow	→ 150
Corrected volume flow	→ 150
Density	→ 150
Reference density	→ 150
Temperature	→ 150
Pressure	→ 150
Concentration	→ 150
Target mass flow	→ 151
Carrier mass flow	→ 151
Target corrected volume flow	→ 151
Carrier corrected volume flow	→ 151
Target volume flow	→ 151
Carrier volume flow	→ 152
CTL	→ 152
CPL	→ 152
CTPL	→ 152
S&W volume flow	→ 153
S&W correction value	→ 153
Reference density alternative	→ 153

GSV flow	→ 153
GSV flow alternative	→ 153
NSV flow	→ 154
NSV flow alternative	→ 154
Oil CTL	→ 154
Oil CPL	→ 154
Oil CTPL	→ 154
Water CTL	→ 155
CTL alternative	→ 155
CPL alternative	→ 155
CTPL alternative	→ 155
Oil reference density	→ 155
Water reference density	→ 156
Oil density	→ 156
Water density	→ 156
Water cut	→ 156
Oil volume flow	→ 156
Oil corrected volume flow	→ 157
Oil mass flow	→ 157
Water volume flow	→ 157
Water corrected volume flow	→ 157
Water mass flow	→ 157
Weighted density average	→ 158
Weighted temperature average	→ 158

Parameter overview with brief description

Parameter	Prerequisite	Description	User interface	Factory setting
Mass flow	–	Displays the mass flow that is currently measured. *Dependency* The unit is taken from: **Mass flow unit** parameter (→ 🗎 94)	Signed floating-point number	–
Volume flow	–	Displays the volume flow that is currently calculated. *Dependency* The unit is taken from the **Volume flow unit** parameter (→ 🗎 94).	Signed floating-point number	–
Corrected volume flow	–	Displays the corrected volume flow that is currently calculated. *Dependency* The unit is taken from: **Corrected volume flow unit** parameter (→ 🗎 94)	Signed floating-point number	–
Density	–	Shows the density currently measured. *Dependency* The unit is taken from the **Density unit** parameter (→ 🗎 94).	Signed floating-point number	–
Reference density	–	Displays the reference density that is currently calculated. *Dependency* The unit is taken from: **Reference density unit** parameter (→ 🗎 94)	Signed floating-point number	–
Temperature	–	Shows the medium temperature currently measured. *Dependency* The unit is taken from: **Temperature unit** parameter (→ 🗎 95)	Signed floating-point number	–
Pressure value	–	Displays either a fixed or external pressure value. *Dependency* The unit is taken from the **Pressure unit** parameter (→ 🗎 95).	Signed floating-point number	–
Concentration	For the following order code: Order code for "Application package", option **ED** "Concentration" ℹ The software options currently enabled are displayed in the **Software option overview** parameter.	Displays the concentration that is currently calculated. *Dependency* The unit is taken from the **Concentration unit** parameter.	Signed floating-point number	–

Parameter	Prerequisite	Description	User interface	Factory setting
Target mass flow	With the following conditions: Order code for "Application package", option **ED** "Concentration" The software options currently enabled are displayed in the **Software option overview** parameter.	Displays the mass flow that is currently measured for the target medium. *Dependency* The unit is taken from: **Mass flow unit** parameter (→ 94)	Signed floating-point number	–
Carrier mass flow	With the following conditions: Order code for "Application package", option **ED** "Concentration" The software options currently enabled are displayed in the **Software option overview** parameter.	Displays the mass flow of the carrier medium that is currently measured. *Dependency* The unit is taken from: **Mass flow unit** parameter (→ 94)	Signed floating-point number	–
Target corrected volume flow	With the following conditions: ▪ Order code for "Application package", option **ED** "Concentration" ▪ The **Ethanol in water** option or **%mass / %volume** option is selected in the **Liquid type** parameter. The software options currently enabled are displayed in the **Software option overview** parameter.	Displays the corrected volume flow that is currently measured for the target fluid. *Dependency* The unit is taken from the **Volume flow unit** parameter (→ 94).	Signed floating-point number	–
Carrier corrected volume flow	With the following conditions: ▪ Order code for "Application package", option **ED** "Concentration" ▪ In the **Liquid type** parameter, the **Ethanol in water** option or **%mass / %volume** option is selected. The software options currently enabled are displayed in the **Software option overview** parameter.	Displays the corrected volume flow currently measured for the carrier fluid. *Dependency* The unit is taken from the **Volume flow unit** parameter (→ 94).	Signed floating-point number	–
Target volume flow	With the following conditions: ▪ Order code for "Application package", option **ED** "Concentration" ▪ The **Ethanol in water** option or **%mass / %volume** option is selected in the **Liquid type** parameter. ▪ The **%vol** option is selected in the **Concentration unit** parameter. The software options currently enabled are displayed in the **Software option overview** parameter.	Displays the volume flow currently measured for the target medium. *Dependency* The unit is taken from the **Volume flow unit** parameter (→ 94).	Signed floating-point number	–

Parameter	Prerequisite	Description	User interface	Factory setting
Carrier volume flow	With the following conditions: ▪ Order code for "Application package", option **ED** "Concentration" ▪ The **Ethanol in water** option or **%mass / %volume** option is selected in the **Liquid type** parameter. ▪ The **%vol** option is selected in the **Concentration unit** parameter. ℹ The software options currently enabled are displayed in the **Software option overview** parameter.	Displays the volume flow currently measured for the carrier medium. *Dependency* The unit is taken from the **Volume flow unit** parameter (→ 🗎 94).	Signed floating-point number	–
CTL	For the following order code: ▪ "Application package", option EJ "Petroleum" ▪ The **API referenced correction** option is selected in **Petroleum mode** parameter. ℹ The software options currently enabled are displayed in the **Software option overview** parameter.	Displays the calibration factor which represents the effect of temperature on the fluid. This is used to convert the measured volume flow and the measured density to values at reference temperature.	Positive floating-point number	–
CPL	For the following order code: ▪ "Application package", option EJ "Petroleum" ▪ The **API referenced correction** option is selected in **Petroleum mode** parameter. ℹ The software options currently enabled are displayed in the **Software option overview** parameter.	Displays the calibration factor which represents the effect of pressure on the fluid. This is used to convert the measured volume flow and the measured density to values at reference pressure.	Positive floating-point number	–
CTPL	For the following order code: ▪ "Application package", option EJ "Petroleum" ▪ The **API referenced correction** option is selected in **Petroleum mode** parameter. ℹ The software options currently enabled are displayed in the **Software option overview** parameter.	Displays the combined calibration factor which represents the effect of temperature and pressure on the fluid This is used to convert the measured volume flow and the measured density to values at reference temperature and reference pressure.	Positive floating-point number	–

Parameter	Prerequisite	Description	User interface	Factory setting
S&W volume flow	For the following order code: ▪ "Application package", option EJ "Petroleum" ▪ The **API referenced correction** option is selected in **Petroleum mode** parameter. The software options currently enabled are displayed in the **Software option overview** parameter.	Displays the S&W volume flow which is calculated from the measured total volume flow minus the net volume flow. *Dependency* The unit is taken from: **Volume flow unit** parameter	Signed floating-point number	–
S&W correction value	For the following order code: ▪ "Application package", option EJ "Petroleum" ▪ The **External value** option or **Current input 1...n** option is selected in the **S&W input mode** parameter. The software options currently enabled are displayed in the **Software option overview** parameter.	Shows the correction value for sediment and water.	Positive floating-point number	–
Reference density alternative	For the following order code: ▪ "Application package", option **EJ** "Petroleum" ▪ In the **Petroleum mode** parameter, the **API referenced correction** option is selected. The software options currently enabled are displayed in the **Software option overview** parameter.	Displays the fluid density at the alternative reference temperature. *Dependency* The unit is taken from: **Reference density unit** parameter	Signed floating-point number	–
GSV flow	For the following order code: ▪ "Application package", option EJ "Petroleum" ▪ The **API referenced correction** option is selected in **Petroleum mode** parameter. The software options currently enabled are displayed in the **Software option overview** parameter.	Displays the measured total volume flow, corrected to the reference temperature and the reference pressure. *Dependency* The unit is taken from: **Corrected volume flow unit** parameter	Signed floating-point number	–
GSV flow alternative	For the following order code: ▪ "Application package", option **EJ** "Petroleum" ▪ In the **Petroleum mode** parameter, the **API referenced correction** option is selected. The software options currently enabled are displayed in the **Software option overview** parameter.	Displays the measured total volume flow, corrected to the alternative reference temperature and the alternative reference pressure. *Dependency* The unit is taken from: **Corrected volume flow unit** parameter	Signed floating-point number	–

Parameter	Prerequisite	Description	User interface	Factory setting
NSV flow	For the following order code: ▪ "Application package", option EJ "Petroleum" ▪ The **API referenced correction** option is selected in **Petroleum mode** parameter. The software options currently enabled are displayed in the **Software option overview** parameter.	Displays the net volume flow which is calculated from the measured total volume flow minus the value for sediment & water and minus the shrinkage. *Dependency* The unit is taken from: **Corrected volume flow unit** parameter	Signed floating-point number	–
NSV flow alternative	For the following order code: ▪ "Application package", option **EJ** "Petroleum" ▪ In the **Petroleum mode** parameter, the **API referenced correction** option is selected. The software options currently enabled are displayed in the **Software option overview** parameter.	Displays the net volume flow which is calculated from the measured alternative total volume minus the value for sediment & water and minus the shrinkage. *Dependency* The unit is taken from: **Corrected volume flow unit** parameter	Signed floating-point number	–
Oil CTL	For the following order code: ▪ "Application package", option **EJ** "Petroleum" ▪ In the **Petroleum mode** parameter, the **Net oil & water cut** option is selected. The software options currently enabled are displayed in the **Software option overview** parameter.	Displays the correction factor which represents the effect of temperature on the oil. This is used to convert the measured oil volume flow and the measured oil density to values at reference temperature.	Positive floating-point number	–
Oil CPL	For the following order code: ▪ "Application package", option **EJ** "Petroleum" ▪ In the **Petroleum mode** parameter, the **Net oil & water cut** option is selected. The software options currently enabled are displayed in the **Software option overview** parameter.	Displays the correction factor which represents the effect of pressure on the oil. This is used to convert the measured oil volume flow and the measured oil density to values at reference pressure.	Positive floating-point number	–
Oil CTPL	For the following order code: ▪ "Application package", option **EJ** "Petroleum" ▪ In the **Petroleum mode** parameter, the **Net oil & water cut** option is selected. The software options currently enabled are displayed in the **Software option overview** parameter.	Displays the combined correction factor which represents the effect of temperature and pressure on the oil. This is used to convert the measured oil volume flow and the measured oil density to values at reference temperature and reference pressure.	Positive floating-point number	–

Parameter	Prerequisite	Description	User interface	Factory setting
Water CTL	For the following order code: ▪ "Application package", option **EJ** "Petroleum" ▪ In the **Petroleum mode** parameter, the **Net oil & water cut** option is selected. The software options currently enabled are displayed in the **Software option overview** parameter.	Displays the correction factor which represents the effect of temperature on the water. This is used to convert the measured water volume flow and the measured water density to values at reference temperature.	Positive floating-point number	–
CTL alternative	For the following order code: ▪ "Application package", option **EJ** "Petroleum" ▪ In the **Petroleum mode** parameter, the **API referenced correction** option is selected. The software options currently enabled are displayed in the **Software option overview** parameter.	Displays the correction factor which represents the effect of temperature on the fluid. This is used to convert the measured volume flow and the measured density to values at the alternative reference temperature.	Positive floating-point number	–
CPL alternative	For the following order code: ▪ "Application package", option **EJ** "Petroleum" ▪ In the **Petroleum mode** parameter, the **API referenced correction** option is selected. The software options currently enabled are displayed in the **Software option overview** parameter.	Displays the correction factor which represents the effect of pressure on the fluid. This is used to convert the measured volume flow and the measured density to values at the alternative reference pressure.	Positive floating-point number	–
CTPL alternative	For the following order code: ▪ "Application package", option **EJ** "Petroleum" ▪ In the **Petroleum mode** parameter, the **API referenced correction** option is selected. The software options currently enabled are displayed in the **Software option overview** parameter.	Displays the combined correction factor which represents the effect of temperature and pressure on the fluid. This is used to convert the measured volume flow and the measured density to values at the alternative reference temperature and the alternative reference pressure.	Positive floating-point number	–
Oil reference density	For the following order code: ▪ "Application package", option **EJ** "Petroleum" ▪ In the **Petroleum mode** parameter, the **Net oil & water cut** option is selected. The software options currently enabled are displayed in the **Software option overview** parameter.		Signed floating-point number	–

Parameter	Prerequisite	Description	User interface	Factory setting
Water reference density	For the following order code: ▪ "Application package", option **EJ** "Petroleum" ▪ In the **Petroleum mode** parameter, the **Net oil & water cut** option is selected. The software options currently enabled are displayed in the **Software option overview** parameter.		Signed floating-point number	–
Oil density	For the following order code: ▪ "Application package", option **EJ** "Petroleum" ▪ In the **Petroleum mode** parameter, the **Net oil & water cut** option is selected. The software options currently enabled are displayed in the **Software option overview** parameter.	Displays the density of the oil currently measured.	Signed floating-point number	–
Water density	For the following order code: ▪ "Application package", option **EJ** "Petroleum" ▪ In the **Petroleum mode** parameter, the **Net oil & water cut** option is selected. The software options currently enabled are displayed in the **Software option overview** parameter.	Displays the density of the water currently measured.	Signed floating-point number	–
Water cut	For the following order code: ▪ "Application package", option **EJ** "Petroleum" ▪ In the **Petroleum mode** parameter, the **API referenced correction** option is selected. The software options currently enabled are displayed in the **Software option overview** parameter.	Displays the percentage water volume flow in relation to the total volume flow of the fluid.	0 to 100 %	–
Oil volume flow	For the following order code: ▪ "Application package", option **EJ** "Petroleum" ▪ In the **Petroleum mode** parameter, the **Net oil & water cut** option is selected. The software options currently enabled are displayed in the **Software option overview** parameter.	Displays the currently calculated volume flow of the oil. Dependency: ▪ Based on the value displayed in the **Water cut** parameter ▪ The unit is taken from: **Volume flow unit** parameter	Signed floating-point number	–

Parameter	Prerequisite	Description	User interface	Factory setting
Oil corrected volume flow	For the following order code: ▪ "Application package", option **EJ** "Petroleum" ▪ In the **Petroleum mode** parameter, the **Net oil & water cut** option is selected. The software options currently enabled are displayed in the **Software option overview** parameter.	Displays the currently calculated volume flow of the oil, calculated to values at reference temperature and reference pressure. Dependency: ▪ Based on the value displayed in the **Water cut** parameter ▪ The unit is taken from: **Corrected volume flow unit** parameter	Signed floating-point number	–
Oil mass flow	For the following order code: ▪ "Application package", option **EJ** "Petroleum" ▪ In the **Petroleum mode** parameter, the **Net oil & water cut** option is selected. The software options currently enabled are displayed in the **Software option overview** parameter.	Displays the currently calculated mass flow of the oil. Dependency: ▪ Based on the value displayed in the **Water cut** parameter ▪ The unit is taken from: **Mass flow unit** parameter	Signed floating-point number	–
Water volume flow	For the following order code: ▪ "Application package", option **EJ** "Petroleum" ▪ In the **Petroleum mode** parameter, the **Net oil & water cut** option is selected. The software options currently enabled are displayed in the **Software option overview** parameter.	Displays the currently calculated volume flow of the water. Dependency: ▪ Based on the value displayed in the **Water cut** parameter ▪ The unit is taken from: **Volume flow unit** parameter	Signed floating-point number	–
Water corrected volume flow	For the following order code: ▪ "Application package", option **EJ** "Petroleum" ▪ In the **Petroleum mode** parameter, the **Net oil & water cut** option is selected. The software options currently enabled are displayed in the **Software option overview** parameter.	Displays the currently calculated volume flow of the water, calculated to values at reference temperature and reference pressure. Dependency: ▪ Based on the value displayed in the **Water cut** parameter ▪ The unit is taken from: **Corrected volume flow unit** parameter	Signed floating-point number	–
Water mass flow	For the following order code: ▪ "Application package", option **EJ** "Petroleum" ▪ In the **Petroleum mode** parameter, the **Net oil & water cut** option is selected. The software options currently enabled are displayed in the **Software option overview** parameter.	Displays the currently calculated mass flow of the water. Dependency: ▪ Based on the value displayed in the **Water cut** parameter ▪ The unit is taken from: **Mass flow unit** parameter	Signed floating-point number	–

Parameter	Prerequisite	Description	User interface	Factory setting
Weighted density average	For the following order code: ▪ "Application package", option **EJ** "Petroleum" ▪ "Application package", option **EM** "Petroleum + Locking function" ℹ The software options currently enabled are displayed in the **Software option overview** parameter.	Displays the weighted average for the density since the last time the density averages were reset. Dependency: ▪ The unit is taken from: **Density unit** parameter ▪ The value is reset to NaN (Not a Number) via the **Reset weighted averages** parameter	Signed floating-point number	–
Weighted temperature average	For the following order code: ▪ "Application package", option **EJ** "Petroleum" ▪ "Application package", option **EM** "Petroleum + Locking function" ℹ The software options currently enabled are displayed in the **Software option overview** parameter.	Displays the weighted average for the temperature since the last time the temperature averages were reset. Dependency: ▪ The unit is taken from: **Temperature unit** parameter ▪ The value is reset to NaN (Not a Number) via the **Reset weighted averages** parameter	Signed floating-point number	–

11.4.2 Totalizer

The **Totalizer** submenu contains all the parameters needed to display the current measured values for every totalizer.

Navigation

"Diagnostics" menu → Measured values → Totalizer

▶ **Totalizer**

Totalizer value 1 to n	→ 📄 158
Totalizer overflow 1 to n	→ 📄 158

Parameter overview with brief description

Parameter	Prerequisite	Description	User interface
Totalizer value 1 to n	A process variable is selected in the **Assign process variable** parameter of the **Totalizer 1 to n** submenu.	Displays the current totalizer counter value.	Signed floating-point number
Totalizer overflow 1 to n	A process variable is selected in the **Assign process variable** parameter of the **Totalizer 1 to n** submenu.	Displays the current totalizer overflow.	Integer with sign

11.4.3 "Input values" submenu

The **Input values** submenu guides you systematically to the individual input values.

Navigation
"Diagnostics" menu → Measured values → Input values

▶ **Input values**		
	▶ **Current input 1 to n**	→ 📄 159
	▶ **Status input 1 to n**	→ 📄 159

Input values of current input

The **Current input 1 to n** submenu contains all the parameters needed to display the current measured values for every current input.

Navigation
"Diagnostics" menu → Measured values → Input values → Current input 1 to n

▶ **Current input 1 to n**		
	Measured values 1 to n	→ 📄 159
	Measured current 1 to n	→ 📄 159

Parameter overview with brief description

Parameter	Description	User interface
Measured values 1 to n	Displays the current input value.	Signed floating-point number
Measured current 1 to n	Displays the current value of the current input.	0 to 22.5 mA

Input values of status input

The **Status input 1 to n** submenu contains all the parameters needed to display the current measured values for every status input.

Navigation
"Diagnostics" menu → Measured values → Input values → Status input 1 to n

▶ **Status input 1 to n**		
	Value status input	→ 📄 159

Parameter overview with brief description

Parameter	Description	User interface
Value status input	Shows the current input signal level.	▪ High ▪ Low

11.4.4 Output values

The **Output values** submenu contains all the parameters needed to display the current measured values for every output.

Navigation
"Diagnostics" menu → Measured values → Output values

▶ **Output values**		
	▶ **Current output 1 to n**	→ 📄 160
	▶ **Pulse/frequency/switch output 1 to n**	→ 📄 160
	▶ **Relay output 1 to n**	→ 📄 161

Output values of current output

The **Value current output** submenu contains all the parameters needed to display the current measured values for every current output.

Navigation
"Diagnostics" menu → Measured values → Output values → Value current output 1 to n

▶ **Current output 1 to n**		
	Output current 1 to n	→ 📄 160
	Measured current 1 to n	→ 📄 160

Parameter overview with brief description

Parameter	Description	User interface
Output current 1	Displays the current value currently calculated for the current output.	3.59 to 22.5 mA
Measured current	Displays the current value currently measured for the current output.	0 to 30 mA

Output values for pulse/frequency/switch output

The **Pulse/frequency/switch output 1 to n** submenu contains all the parameters needed to display the current measured values for every pulse/frequency/switch output.

Navigation

"Diagnostics" menu → Measured values → Output values → Pulse/frequency/switch output 1 to n

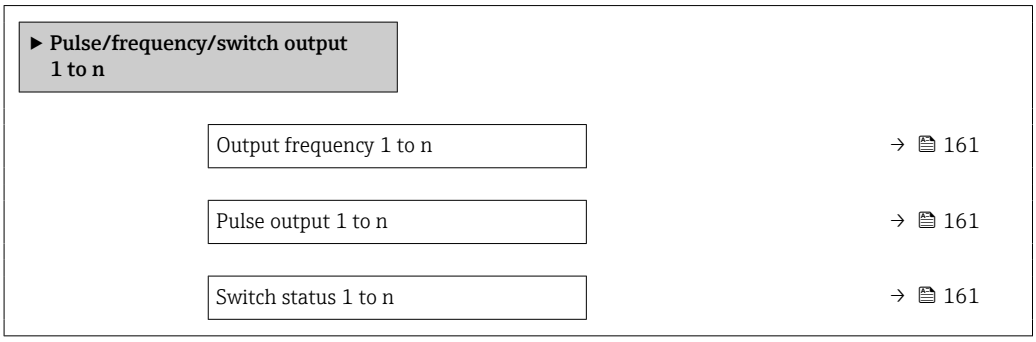

Parameter overview with brief description

Parameter	Prerequisite	Description	User interface
Output frequency 1 to n	In the **Operating mode** parameter, the **Frequency** option is selected.	Displays the value currently measured for the frequency output.	0.0 to 12 500.0 Hz
Pulse output 1 to n	The **Pulse** option is selected in the **Operating mode** parameter parameter.	Displays the pulse frequency currently output.	Positive floating-point number
Switch status 1 to n	The **Switch** option is selected in the **Operating mode** parameter.	Displays the current switch output status.	▪ Open ▪ Closed

Output values for relay output

The **Relay output 1 to n** submenu contains all the parameters needed to display the current measured values for every relay output.

Navigation

"Diagnostics" menu → Measured values → Output values → Relay output 1 to n

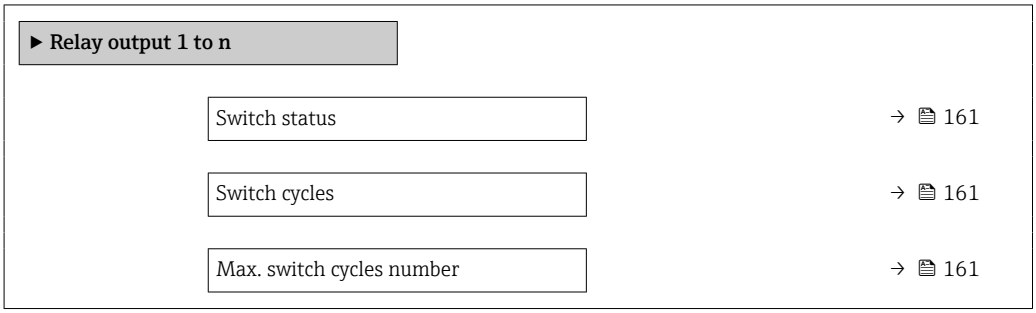

Parameter overview with brief description

Parameter	Description	User interface
Switch status	Shows the current relay switch status.	▪ Open ▪ Closed
Switch cycles	Shows number of all performed switch cycles.	Positive integer
Max. switch cycles number	Shows the maximal number of guaranteed switch cycles.	Positive integer

11.5 Adapting the measuring device to the process conditions

The following are available for this purpose:
- Basic settings using the**Setup** menu (→ 📄 90)
- Advanced settings using the**Advanced setup** submenu (→ 📄 123)

11.6 Performing a totalizer reset

The totalizers are reset in the **Operation** submenu:
- Control Totalizer
- Reset all totalizers

Navigation
"Operation" menu → Totalizer handling

▶ **Totalizer handling**	
Control Totalizer 1 to n	→ 📄 162
Preset value 1 to n	→ 📄 162
Reset all totalizers	→ 📄 162

Parameter overview with brief description

Parameter	Prerequisite	Description	Selection / User entry	Factory setting
Control Totalizer 1 to n	A process variable is selected in the **Assign process variable** parameter of the **Totalizer 1 to n** submenu.	Control totalizer value.	▪ Totalize ▪ Reset + hold ▪ Preset + hold ▪ Reset + totalize ▪ Preset + totalize ▪ Hold	–
Preset value 1 to n	A process variable is selected in the **Assign process variable** parameter of the **Totalizer 1 to n** submenu.	Specify start value for totalizer. *Dependency* ℹ The unit of the selected process variable is defined in the **Unit totalizer** parameter for the totalizer.	Signed floating-point number	Depends on country: ▪ 0 kg ▪ 0 lb
Reset all totalizers	–	Reset all totalizers to 0 and start.	▪ Cancel ▪ Reset + totalize	–

11.6.1 Function scope of "Control Totalizer" parameter

Options	Description
Totalize	The totalizer is started or continues running.
Reset + hold	The totaling process is stopped and the totalizer is reset to 0.
Preset + hold [1)]	The totaling process is stopped and the totalizer is set to its defined start value from the **Preset value** parameter.
Reset + totalize	The totalizer is reset to 0 and the totaling process is restarted.

Options	Description
Preset + totalize [1]	The totalizer is set to the defined start value in the **Preset value** parameter and the totaling process is restarted.
Hold	Totalizing is stopped.

1) Visible depending on the order options or device settings

11.6.2 Function range of "Reset all totalizers" parameter

Options	Description
Cancel	No action is executed and the user exits the parameter.
Reset + totalize	Resets all totalizers to 0 and restarts the totaling process. This deletes all the previously aggregated flow values.

11.7 Displaying the measured value history

The **Extended HistoROM** application package must be enabled in the device (order option) for the **Data logging** submenu to appear. This contains all the parameters for the measured value history.

Data logging is also available via:
- Plant Asset Management Tool FieldCare → 📄 72.
- Web browser

Function scope
- A total of 1000 measured values can be stored
- 4 logging channels
- Adjustable logging interval for data logging
- Displays the measured value trend for each logging channel in the form of a chart

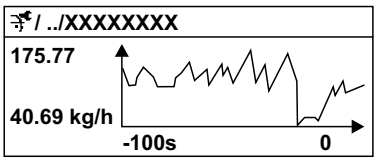

A0016357

30 Chart of a measured value trend

- x-axis: depending on the number of channels selected displays 250 to 1000 measured values of a process variable.
- y-axis: displays the approximate measured value span and constantly adapts this to the ongoing measurement.

If the length of the logging interval or the assignment of the process variables to the channels is changed, the content of the data logging is deleted.

Navigation
"Diagnostics" menu → Data logging

▶ Data logging	
Assign channel 1	→ 📄 165
Assign channel 2	→ 📄 166

Assign channel 3	→ 166
Assign channel 4	→ 166
Logging interval	→ 166
Clear logging data	→ 166
Data logging	→ 166
Logging delay	→ 166
Data logging control	→ 166
Data logging status	→ 166
Entire logging duration	→ 166

Parameter overview with brief description

Parameter	Prerequisite	Description	Selection / User entry / User interface
Assign channel 1	The **Extended HistoROM** application package is available.	Assign process variable to logging channel.	▪ Off ▪ Mass flow ▪ Volume flow ▪ Corrected volume flow * ▪ Density ▪ Reference density * ▪ Temperature ▪ Oscillation amplitude * ▪ Current output 1 * ▪ Current output 2 * ▪ Current output 3 * ▪ Current output 4 * ▪ Pressure ▪ GSV flow * ▪ GSV flow alternative * ▪ NSV flow * ▪ NSV flow alternative * ▪ S&W volume flow * ▪ Reference density alternative * ▪ Water cut * ▪ Oil density * ▪ Water density * ▪ Oil mass flow * ▪ Water mass flow * ▪ Oil volume flow * ▪ Water volume flow * ▪ Oil corrected volume flow * ▪ Water corrected volume flow * ▪ Concentration * ▪ Target mass flow * ▪ Carrier mass flow * ▪ Target volume flow * ▪ Carrier volume flow * ▪ Target corrected volume flow * ▪ Carrier corrected volume flow * ▪ Oscillation amplitude * ▪ Current output 1 * ▪ Current output 2 * ▪ Current output 3 * ▪ Current output 4 * ▪ Index inhomogeneous medium ▪ Application specific output 0 * ▪ Application specific output 1 * ▪ HBSI * ▪ Exciter current 0 ▪ Oscillation damping 0 ▪ Oscillation damping fluctuation 0 * ▪ Oscillation frequency 0 ▪ Oscillation amplitude * ▪ Frequency fluctuation 0 * ▪ Oscillation amplitude 1 * ▪ Signal asymmetry ▪ Carrier pipe temperature * ▪ Electronic temperature

Parameter	Prerequisite	Description	Selection / User entry / User interface
			▪ Index suspended bubbles *
Assign channel 2	The **Extended HistoROM** application package is available. ℹ The software options currently enabled are displayed in the **Software option overview** parameter.	Assign a process variable to logging channel.	For the picklist, see **Assign channel 1** parameter (→ 🗎 165)
Assign channel 3	The **Extended HistoROM** application package is available. ℹ The software options currently enabled are displayed in the **Software option overview** parameter.	Assign a process variable to logging channel.	For the picklist, see **Assign channel 1** parameter (→ 🗎 165)
Assign channel 4	The **Extended HistoROM** application package is available. ℹ The software options currently enabled are displayed in the **Software option overview** parameter.	Assign a process variable to logging channel.	For the picklist, see **Assign channel 1** parameter (→ 🗎 165)
Logging interval	The **Extended HistoROM** application package is available.	Define the logging interval for data logging. This value defines the time interval between the individual data points in the memory.	0.1 to 3 600.0 s
Clear logging data	The **Extended HistoROM** application package is available.	Clear the entire logging data.	▪ Cancel ▪ Clear data
Data logging	–	Select the type of data logging.	▪ Overwriting ▪ Not overwriting
Logging delay	In the **Data logging** parameter, the **Not overwriting** option is selected.	Enter the time delay for measured value logging.	0 to 999 h
Data logging control	In the **Data logging** parameter, the **Not overwriting** option is selected.	Start and stop measured value logging.	▪ None ▪ Delete + start ▪ Stop
Data logging status	In the **Data logging** parameter, the **Not overwriting** option is selected.	Displays the measured value logging status.	▪ Done ▪ Delay active ▪ Active ▪ Stopped
Entire logging duration	In the **Data logging** parameter, the **Not overwriting** option is selected.	Displays the total logging duration.	Positive floating-point number

* Visibility depends on order options or device settings

11.8 Gas Fraction Handler

The Gas Fraction Handler improves measurement stability and repeatability in the event of two-phase media and provides valuable diagnostic information for the process.

The function continuously checks for the presence of gas bubbles in liquids or droplets in gases, as this second phase influences the output values for flow and density.

In the case of two-phase media, the Gas Fraction Handler stabilizes the output values and enables better readability for operators and easier interpretation by the process control system. The level of smoothing is adjusted according to the severity of the disturbances introduced by the second phase. In the case of single-phase media, the Gas Fraction Handler does not have any influence on the output values.

Possible options in the Gas Fraction Handler parameter:
- Off: Disables the Gas Fraction Handler. When a second phase is present, large fluctuations in the values output for flow and density will occur.
- Moderate: Use for applications with low levels or intermittent levels of second phase.
- Powerful: Use for applications with very significant levels of second phase.

The Gas Fraction Handler is cumulative to any fixed damping constants applied to flow and density that are set elsewhere in the instrument parameterization.

For detailed information on the parameter descriptions of the Gas Fraction Handler, see the Special Documentation for the device → 📄 275

11.8.1 "Measurement mode" submenu

Navigation
"Expert" menu → Sensor → Measurement mode

▶ Measurement mode	
Select medium	→ 📄 167
Select gas type	→ 📄 168
Reference sound velocity	→ 📄 168
Temperature coefficient sound velocity	→ 📄 168
Gas Fraction Handler	→ 📄 168

Parameter overview with brief description

Parameter	Prerequisite	Description	Selection / User entry	Factory setting
Multi-frequency activation	–	Enable/disable multi-frequency technology to increase the measuring accuracy in the event of microbubbles in the medium.	▪ No ▪ Yes	Yes
Select medium	–	Use this function to select the type of medium: "Gas" or "Liquid". Select the "Other" option in exceptional cases in order to enter the properties of the medium manually (e.g. for highly compressive liquids such as sulfuric acid).	▪ Liquid ▪ Gas	–

Parameter	Prerequisite	Description	Selection / User entry	Factory setting
Select gas type	In the **Medium selection** submenu, the **Gas** option is selected.	Select measured gas type.	▪ Air ▪ Ammonia NH3 ▪ Argon Ar ▪ Sulfur hexafluoride SF6 ▪ Oxygen O2 ▪ Ozone O3 ▪ Nitrogen oxide NOx ▪ Nitrogen N2 ▪ Nitrous oxide N2O ▪ Methane CH4 ▪ Hydrogen H2 ▪ Helium He ▪ Hydrogen chloride HCl ▪ Hydrogen sulfide H2S ▪ Ethylene C2H4 ▪ Carbon dioxide CO2 ▪ Carbon monoxide CO ▪ Chlorine Cl2 ▪ Butane C4H10 ▪ Propane C3H8 ▪ Propylene C3H6 ▪ Ethane C2H6 ▪ Others	–
Reference sound velocity	In the **Select gas type** parameter, the **Others** option is selected.	Enter sound velocity of gas at 0 °C (32 °F).	1 to 99 999.9999 m/s	–
Reference sound velocity	In the **Select medium type** parameter, the **Others** option is selected.	Enter sound velocity of gas at 0 °C (32 °F).	Signed floating-point number	–
Temperature coefficient sound velocity	In the **Select gas type** parameter, the **Others** option is selected.	Enter temperature coefficient for the gas sound velocity.	Positive floating point number	–
Temperature coefficient sound velocity	In the **Select medium type** parameter, the **Others** option is selected.	Enter temperature coefficient for the gas sound velocity.	Signed floating-point number	–
Gas Fraction Handler	–	Activates the Gas Fraction Handler function for two phase media.	▪ Off ▪ Moderate ▪ Powerful	–

11.8.2 "Medium index" submenu

Navigation

"Expert" menu → Application → Medium index

▶ **Medium index**

Index inhomogeneous medium (6368)	→ 169
Cut off inhomogeneous wet gas (6375)	→ 169
Cut off inhomogeneous liquid (6374)	→ 169

Index suspended bubbles (6376)	→ 169
Cut off suspended bubbles (6370)	→ 169

Parameter overview with brief description

Parameter	Prerequisite	Description	User interface / User entry
Index inhomogeneous medium	–	Shows the degree of inhomogeneity of the medium.	Signed floating-point number
Cut off inhomogeneous wet gas	–	Enter cut off value for wet gas applications. Below this value the Index inhomogeneous medium is set to 0.	Positive floating-point number
Cut off inhomogeneous liquid	–	Enter cut off value for liquid applications. Below this value the 'Inhomogeneous medium index' is set to 0.	Positive floating-point number
Index suspended bubbles	The diagnostic index is only available for Promass Q.	Shows the relative amount of suspended bubbles in the medium.	Signed floating-point number
Cut off suspended bubbles	The parameter is only available for Promass Q.	Enter the cut off value for suspended bubbles. Below this value the 'Index for suspended bubbles' is set to 0.	Positive floating-point number

12 Diagnostics and troubleshooting

12.1 General troubleshooting

For local display

Fault	Possible causes	Remedial action
Local display is dark, but signal output is within the valid range	The cable of the display module is not plugged in correctly.	Insert the plug correctly into the main electronics module and display module.
Local display dark and no output signals	Supply voltage does not match the voltage specified on the nameplate.	Apply the correct supply voltage .
Local display dark and no output signals	Supply voltage has incorrect polarity.	Reverse polarity of supply voltage.
Local display dark and no output signals	No contact between connecting cables and terminals.	Check the electrical contact between the cable and terminals and correct if necessary.
Local display dark and no output signals	▪ Terminals are not plugged into the I/O electronics module correctly. ▪ Terminals are not plugged into the main electronics module correctly.	Check terminals.
Local display dark and no output signals	▪ I/O electronics module is defective. ▪ Main electronics module is defective.	Order spare part → 🗎 240.
Local display cannot be read, but signal output is within the valid range	Display is set too bright or too dark.	▪ Set the display brighter by simultaneously pressing ⊞ + Ⓔ. ▪ Set the display darker by simultaneously pressing ⊟ + Ⓔ.
Local display is dark, but signal output is within the valid range	Display module is defective.	Order spare part → 🗎 240.
Backlighting of local display is red	Diagnostic event with "Alarm" diagnostic behavior has occurred.	Take remedial actions → 🗎 182
Text on local display appears in a language that cannot be understood.	The selected operating language cannot be understood.	1. Press ⊟ + ⊞ for 2 s ("home position"). 2. Press Ⓔ. 3. Configure the required language in the **Display language** parameter (→ 🗎 135).
Message on local display: "Communication Error" "Check Electronics"	Communication between the display module and the electronics is interrupted.	▪ Check the cable and the connector between the main electronics module and display module. ▪ Order spare part → 🗎 240.

For output signals

Fault	Possible causes	Remedial action
Signal output outside the valid range	Main electronics module is defective.	Order spare part → 🗎 240.
Device shows correct value on local display, but signal output is incorrect, though in the valid range.	Parameter configuration error	Check and adjust parameter configuration.
Device is measuring incorrectly.	Configuration error or device is operated outside the application.	1. Check and correct parameter configuration. 2. Observe limit values specified in the "Technical Data".

For access

Fault	Possible causes	Remedial action
Write access to parameters is not possible.	Hardware write protection is enabled.	Set the write protection switch on the main electronics module to the **OFF** position → 🗎 145.
Write access to parameters is not possible.	Current user role has limited access authorization.	1. Check user role → 🗎 60. 2. Enter correct customer-specific access code → 🗎 60.
Connection via PROFINET is not possible.	PROFINET bus cable is connected incorrectly.	Check the terminal assignment → 🗎 34.
Connection via PROFINET is not possible.	Device plug is connected incorrectly.	Check the pin assignment of the device plugs .
Connection to the web server is not possible.	Web server is disabled.	Use the "FieldCare" or "DeviceCare" operating tool to check if the web server of the device is enabled and enable if necessary → 🗎 67.
	The Ethernet interface on the PC is incorrectly configured.	▶ Check the properties of the Internet protocol (TCP/IP)→ 🗎 63. ▶ Check the network settings with the IT manager.
Connection to the web server is not possible.	▪ The IP address on the PC is incorrectly configured. ▪ IP address is not known.	▶ If addressing via hardware: open the transmitter and check the configured IP address (last octet). ▶ Check the IP address of the device with the IT specialist. ▶ If the IP address is not known, set DIP switch no. 10 to ON, restart the device and enter the factory IP address 192.168.1.212.
	The web browser setting "Use a proxy server for LAN" is enabled on the PC.	Disable the use of the proxy server in the LAN settings.
	Apart from the active network connection to the measuring instrument, other network connections are also being used.	▪ Make sure that no other network connections are established by the computer (also no WLAN) and close other programs with network access to the computer. ▪ If using a docking station for notebooks, make sure that a network connection to another network is not active.
Connection to the web server is not possible.	WLAN access data are incorrect.	▪ Check WLAN network status. ▪ Log on to the device again using WLAN access data. ▪ Check that WLAN is enabled on the measuring instrument and operating unit → 🗎 63.
	WLAN communication is disabled.	–
Unable to connect to web server, FieldCare or DeviceCare.	WLAN network is not available.	▪ Check if WLAN reception is present: LED on display module is lit blue. ▪ Check if WLAN connection is enabled: LED on display module flashes blue. ▪ Switch on instrument function.
Network connection not present or unstable	WLAN network is weak.	▪ Operating unit outside reception range: Check network status on operating unit. ▪ To improve network performance, use an external WLAN antenna.
	Parallel WLAN and Ethernet communication	▪ Check network settings. ▪ Temporarily enable only the WLAN as an interface.
Web browser is frozen and operation no longer possible	Data transfer is active.	Wait until data transfer or current action is finished.
	Connection lost	▶ Check cable connection and power supply. ▶ Refresh the web browser and restart if necessary.

Fault	Possible causes	Remedial action
Display of web browser content is difficult to read or incomplete.	Web browser version used is not optimal.	▶ Use correct web browser version → 🗎 62. ▶ Empty the web browser cache. ▶ Restart the web browser.
	Unsuitable view settings.	Change the font size/display ratio of the web browser.
Incomplete or no display of content in the web browser	▪ JavaScript is not enabled. ▪ JavaScript cannot be enabled.	▶ Enable JavaScript. ▶ Enter http://XXX.XXX.X.X.XX/servlet/basic.html as the IP address.
Operation with FieldCare or DeviceCare via service interface CDI-RJ45 (port 8000) is not possible.	Firewall of the PC or network is blocking communication.	Depending on the settings of the firewall used on the PC or in the network, the firewall must be adapted or disabled to allow FieldCare/DeviceCare access.
Flashing the firmware with FieldCare or DeviceCare via service interface CDI-RJ45 (port 8000 or TFTP ports) is not possible.	Firewall of the PC or network is blocking communication.	Depending on the settings of the firewall used on the PC or in the network, the firewall must be adapted or disabled to allow FieldCare/DeviceCare access.

For system integration

Error	Possible causes	Remedy
The PROFINET device name is not displayed correctly and contains coding.	A device name containing one or more underscores has been specified via the automation system.	Specify a correct device name (without underscores) via the automation system.

12.2 Diagnostic information via LEDs

12.2.1 Transmitter

Various LEDs in the transmitter provide information on the device status.

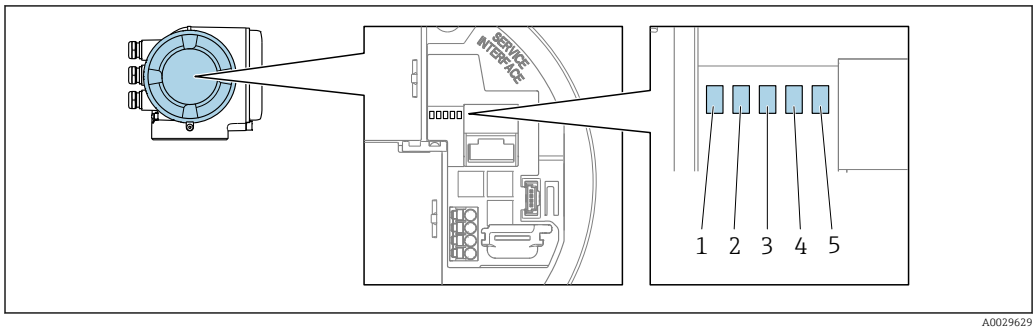

A0029629

1 *Supply voltage*
2 *Device status*
3 *Flashing/network status*
4 *Port 1 active: PROFINET*
5 *Port 2 active: PROFINET and service interface (CDI)*

LED		Color	Meaning
1	Supply voltage	Off	Supply voltage is off or too low.
		Green	Supply voltage is OK.
2	Device status (normal operation)	Off	Firmware error.
		Green	Device status is OK.
		Flashing green	Device is not configured.

LED		Color	Meaning
		Flashing red	A diagnostic event with "Warning" diagnostic behavior has occurred.
		Red	A diagnostic event with "Alarm" diagnostic behavior has occurred.
		Red/green flashing	The device restarts.
2	Device status (during start-up)	Flashes red slowly	If > 30 seconds: problem with the boot loader.
		Flashes red quickly	If > 30 seconds: compatibility problem when reading the firmware.
3	Flashing/network status	Green	Cyclic data exchange is active.
		Flashing green	Following request from automation system: Flash frequency: 1 Hz (flash functionality: 500 ms on, 500 ms off) Cyclic data exchange is not active, no IP address is available: Flash frequency: 3 Hz
		Red	IP address is available but there is no connection to the automation system
		Flashing red	Cyclic data exchange was active but the connection was disconnected: Flash frequency: 3 Hz
4	Port 1 active: PROFINET	Off	Not connected or no connection established.
		White	Connected and connection established.
		Flashing white	Communication not active.
5	Port 2 active: PROFINET and service interface (CDI)	Off	Not connected or no connection established.
		Yellow	Connected and connection established.
		Flashing yellow	Communication not active.

12.3 Diagnostic information on local display

12.3.1 Diagnostic message

Faults detected by the self-monitoring system of the measuring instrument are displayed as a diagnostic message in alternation with the operational display.

Operational display in alarm condition	Diagnostic message

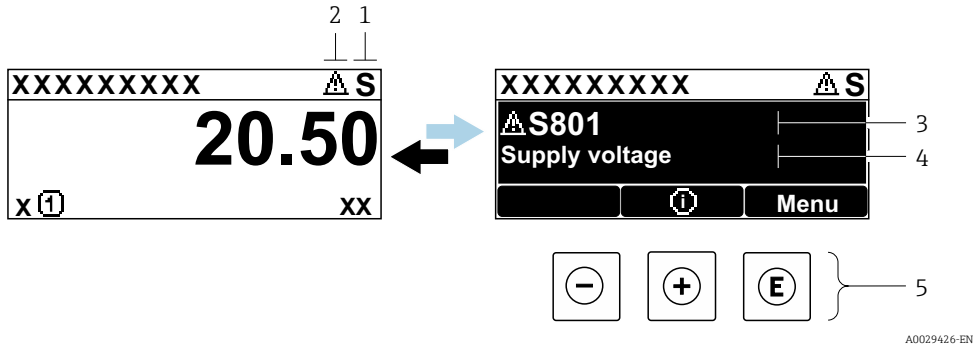

1 *Status signal*
2 *Diagnostic behavior*
3 *Diagnostic behavior with diagnostic code*
4 *Event text*
5 *Operating elements*

If two or more diagnostic events are pending simultaneously, only the message of the diagnostic event with the highest priority is shown.

Other diagnostic events that have occurred can be displayed in the **Diagnostics** menu:
- Via parameter → 233
- Via submenus → 233

Status signals

The status signals provide information on the state and reliability of the device by categorizing the cause of the diagnostic information (diagnostic event).

The status signals are categorized in accordance with VDI/VDE 2650 and NAMUR Recommendation NE 107:
- F = Failure
- C = Function Check
- S = Out of Specification
- M = Maintenance Required

Symbol	Meaning
F	**Failure** A device error has occurred. The measured value is no longer valid.
C	**Function check** The device is in the service mode (e.g. during a simulation).
S	**Out of specification** The device is being operated: Outside its technical specification limits (e.g. outside the process temperature range)
M	**Maintenance required** Maintenance is required. The measured value remains valid.

Diagnostic behavior

Symbol	Meaning
	Alarm ▪ Measurement is interrupted. ▪ Signal outputs and totalizers assume the defined alarm condition. ▪ A diagnostic message is generated.
	Warning ▪ Measurement is resumed. ▪ The signal outputs and totalizers are not affected. ▪ A diagnostic message is generated.

Diagnostic information

The fault can be identified using the diagnostic information. The short text helps you by providing information about the fault. In addition, the corresponding symbol for the diagnostic behavior is displayed in front of the diagnostic information on the local display.

Operating elements

Operating key	Meaning
	Plus key *In menu, submenu* Opens the message about the remedial measures.
	Enter key *In menu, submenu* Opens the operating menu.

12.3.2 Calling up remedial actions

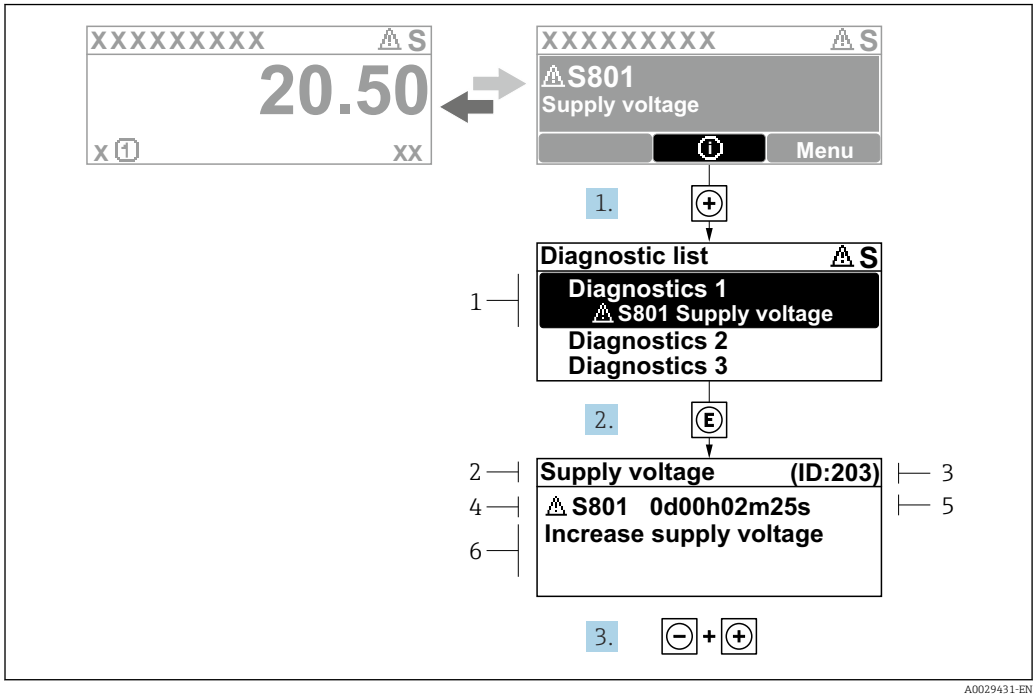

31 *Message for remedial actions*

1 *Diagnostic information*
2 *Event text*
3 *Service ID*
4 *Diagnostic behavior with diagnostic code*
5 *Operating time of occurrence*
6 *Remedial actions*

1. The user is in the diagnostic message.
   Press ⊞ (ⓘ symbol).
   ↳ The **Diagnostic list** submenu opens.
2. Select the desired diagnostic event with ⊞ or ⊟ and press Ⓔ .
   ↳ The message about the remedial measures opens.
3. Press ⊟ + ⊞ simultaneously.
   ↳ The message about the remedial measures closes.

The user is in the **Diagnostics** menu in the **Diagnostic list** submenu. A list of active diagnostics is displayed. The user can select a diagnostic event.

1. Press Ⓔ.
   ↳ The message for the remedial actions for the selected diagnostic event opens.
2. Press ⊟ + ⊞ simultaneously.
   ↳ The message about the remedial actions closes.

12.4 Diagnostic information in the web browser

12.4.1 Diagnostic options

Any faults detected by the measuring device are displayed in the Web browser on the home page once the user has logged on.

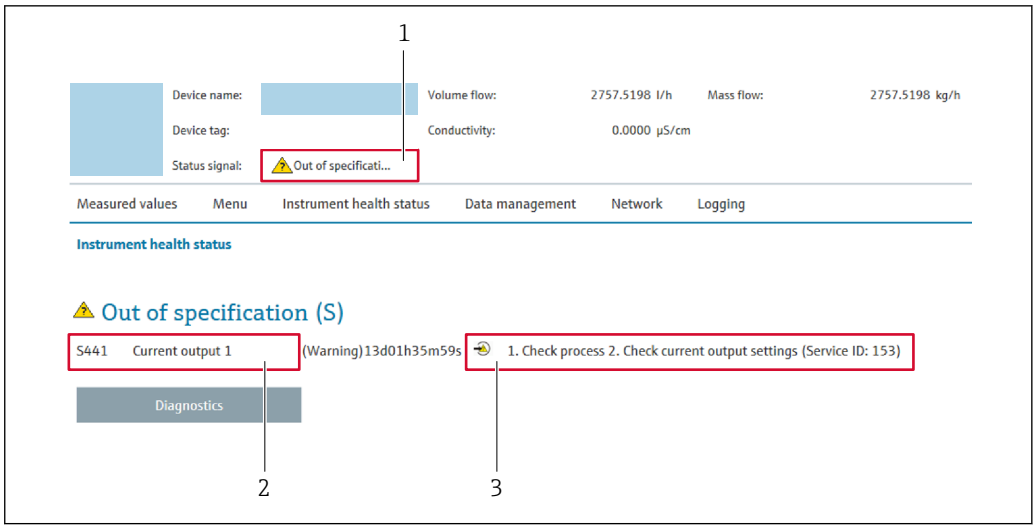

A0031056

1 *Status area with status signal*
2 *Diagnostic information*
3 *Remedial measures with service ID*

In addition, diagnostic events which have occurred can be shown in the **Diagnostics** menu:
- Via parameter → 233
- Via submenu → 233

Status signals

The status signals provide information on the state and reliability of the device by categorizing the cause of the diagnostic information (diagnostic event).

Symbol	Meaning
	Failure A device error has occurred. The measured value is no longer valid.
	Function check The device is in service mode (e.g. during a simulation).
	Out of specification The device is being operated: Outside its technical specification limits (e.g. outside the process temperature range)
	Maintenance required Maintenance is required. The measured value remains valid.

The status signals are categorized in accordance with VDI/VDE 2650 and NAMUR Recommendation NE 107.

12.4.2 Calling up remedial actions

Remedial actions are provided for each diagnostic event to ensure that problems can be rectified quickly. These actions are displayed along with the diagnostic event and the related diagnostic information.

12.5 Diagnostic information in FieldCare or DeviceCare

12.5.1 Diagnostic options

Any faults detected by the measuring device are displayed on the home page of the operating tool once the connection has been established.

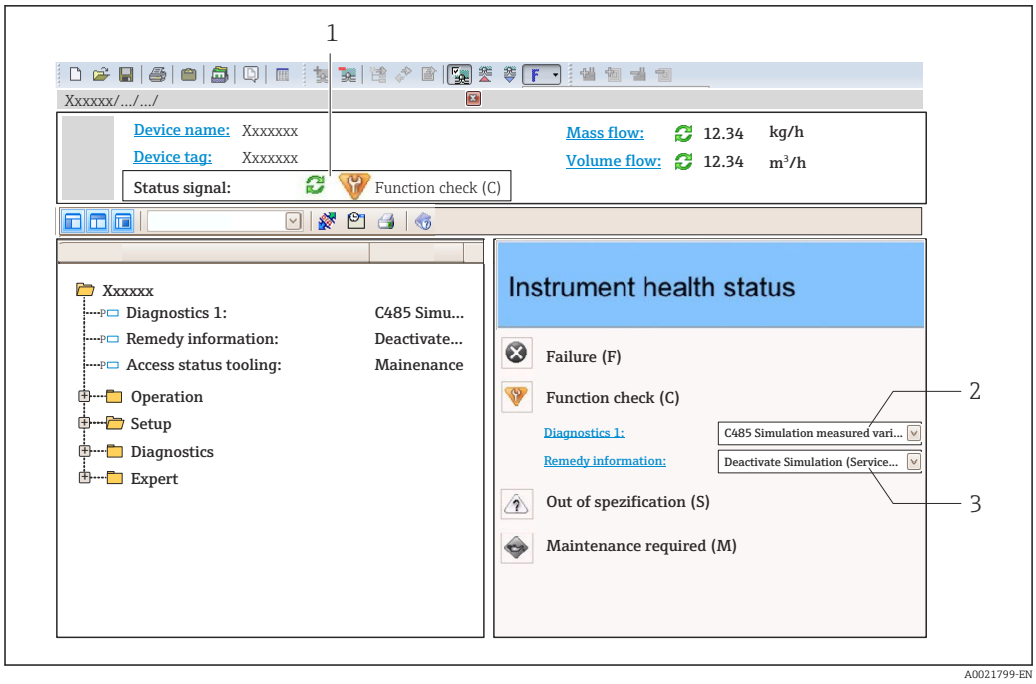

1 *Status area with status signal → 📄 174*
2 *Diagnostic information → 📄 175*
3 *Remedial actions with service ID*

In addition, diagnostic events which have occurred can be shown in the **Diagnostics** menu:
- Via parameter → 📄 233
- Via submenu → 📄 233

Diagnostic information

The fault can be identified using the diagnostic information. The short text helps you by providing information about the fault. In addition, the corresponding symbol for the diagnostic behavior is displayed in front of the diagnostic information on the local display.

12.5.2 Calling up remedy information

Remedy information is provided for every diagnostic event to ensure that problems can be rectified quickly:
- On the home page
  Remedy information is displayed in a separate field below the diagnostics information.
- In the **Diagnostics** menu
  Remedy information can be called up in the working area of the user interface.

The user is in the **Diagnostics** menu.

1. Call up the desired parameter.
2. On the right in the working area, mouse over the parameter.
   ↳ A tool tip with remedy information for the diagnostic event appears.

12.6 Adapting the diagnostic information

12.6.1 Adapting the diagnostic behavior

Each item of diagnostic information is assigned a specific diagnostic behavior at the factory. The user can change this assignment for specific diagnostic information in the **Diagnostic behavior** submenu.

Expert → System → Diagnostic handling → Diagnostic behavior

Available diagnostic behaviors

The following diagnostic behaviors can be assigned:

Diagnostic behavior	Description
Alarm	The device stops measurement. The totalizers assume the defined alarm condition. A diagnostic message is generated.
Warning	The device continues to measure. Measured value output via PROFINET and totalizers are not affected. A diagnostic message is generated.
Logbook entry only	The device continues to measure. The diagnostic message is only displayed in the **Event logbook** submenu (**Event list** submenu) and is not displayed in alternating sequence with the operational display.
Off	The diagnostic event is ignored, and no diagnostic message is generated or entered.

Displaying the measured value status

If modules with input data (e.g. Analog Input module, Discrete Input module, Totalizer module, Heartbeat module) are configured for cyclic data transmission, the measured value status is coded as per PROFINET PA Profile 4 Specification and transmitted along with the measured value to the PROFINET Controller via the status byte. The status byte is split into three segments: Quality, Quality Substatus and Limits.

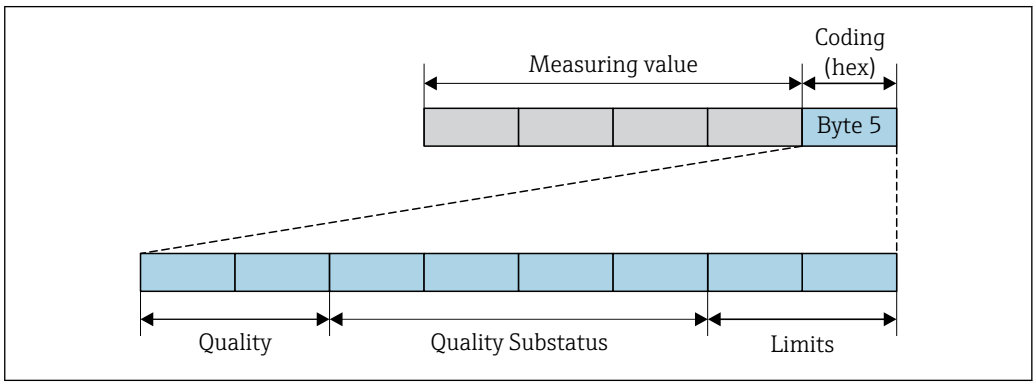

32 *Structure of the status byte*

The contents of the status byte depends on the configured failure mode in the individual function block. Depending on which failure mode has been configured, status information in accordance with PROFINET PA Profile Specification 4 is transmitted to the the PROFINET controller via the status byte status information. The two bits for the limits always have the value 0.

Supported status information

Status	Coding (hex)
BAD - Maintenance alarm	0x24
BAD - Process related	0x28
BAD - Function check	0x3C
UNCERTAIN - Initial value	0x4F
UNCERTAIN - Maintenance demanded	0x68
UNCERTAIN - Process related	0x78
GOOD - OK	0x80
GOOD - Maintenance demanded	0xA8
GOOD - Function check	0xBC

Determining the measured value status and device status via the diagnostic behavior

When the diagnostic behavior is assigned, this also changes the measured value status and device status for the diagnostic information. The measured value status and device status depend on the choice of diagnostic behavior and on the group in which the diagnostic information is located.

The diagnostic information is grouped as follows:
- Diagnostic information pertaining to the sensor: diagnostic number 000 to 199
  → 📄 180
- Diagnostic information pertaining to the electronics: diagnostic number 200 to 399
  → 📄 180
- Diagnostic information pertaining to the configuration: diagnostic number 400 to 599
  → 📄 181
- Diagnostic information pertaining to the process: diagnostic number 800 to 999
  → 📄 181

Depending on the group in which the diagnostic information is located, the following measured value status and device status are firmly assigned to the particular diagnostic behavior:

Diagnostic information pertaining to the sensor: diagnostic number 000 to 199

Diagnostic behavior (configurable)	Measured value status (fixed assignment)				Device diagnosis (fixed assignment)
	Quality	Quality Substatus	Coding (hex)	Category (NE107)	
Alarm	BAD	Maintenance alarm	0x24	F (Failure)	Maintenance alarm
Warning	GOOD	Maintenance demanded	0xA8	M (Maintenance)	Maintenance demanded
Logbook entry only	GOOD	ok	0x80	–	–
Off					

Diagnostic information pertaining to the electronics: diagnostic number 200 to 399

Diagnostic number 200 to 301, 303 to 399

Diagnostic behavior (configurable)	Measured value status (fixed assignment)				Device diagnostics (fixed assignment)
	Quality	Quality Substatus	Coding (hex)	Category (NE107)	
Alarm	BAD	Maintenance alarm	0x24	F (Failure)	Maintenance alarm
Warning					

Diagnostic behavior (configurable)	Measured value status (fixed assignment)				Device diagnostics (fixed assignment)
	Quality	Quality Substatus	Coding (hex)	Category (NE107)	
Logbook entry only	GOOD	ok	0x80 to 0x8E	–	–
Off					

Diagnostic information 302

Diagnostic behavior (configurable)	Measured value status (fixed assignment)				Device diagnostics (fixed assignment)
	Quality	Quality Substatus	Coding (hex)	Category (NE107)	
Alarm	BAD	Function check, local override	0x24	C	Function check
Warning	GOOD	Function check	0xBC to 0xBF	–	–

Diagnostic information 302 (device verification active) is output during internal or external Heartbeat verification.
- Signal status: Function check
- Choice of diagnostic behavior: alarm or warning (factory setting)

When the Heartbeat Verification is started, data logging is interrupted, the last valid measured value is output and the totalizer counter is stopped.

Diagnostic information pertaining to the configuration: diagnostic number 400 to 599

Diagnostic behavior (configurable)	Measured value status (fixed assignment)				Device diagnosis (fixed assignment)
	Quality	Quality Substatus	Coding (hex)	Category (NE107)	
Alarm	BAD	Process related	0x28	F (Failure)	Invalid process condition
Warning	UNCERTAIN	Process related	0x78	S (Out of specification)	Invalid process condition
Logbook entry only	GOOD	ok	0x80	–	–
Off					

Diagnostic information pertaining to the process: diagnostic number 800 to 999

Diagnostic behavior (configurable)	Measured value status (fixed assignment)				Device diagnosis (fixed assignment)
	Quality	Quality Substatus	Coding (hex)	Category (NE107)	
Alarm	BAD	Process related	0x28	F (Failure)	Invalid process condition
Warning	UNCERTAIN	Process related	0x78	S (Out of specification)	Invalid process condition
Logbook entry only	GOOD	ok	0x80	–	–
Off					

12.7 Overview of diagnostic information

- The amount of diagnostic information and the number of measured variables affected increase if the measuring device has one or more application packages.
- All of the measured variables affected in the entire Promass instrument family are always listed under "Measured variables affected". The measured variables available for the device in question depend on the device version. When assigning the measured variables to the device functions, for example to the individual outputs, all of the measured variables available for the device version in question are available for selection.

In the case of some items of diagnostic information, the diagnostic behavior can be changed. Adapting the diagnostic information → 179

12.7.1 Diagnostic of sensor

Diagnostic information			Remedy instructions
No.	**Short text**		
022	Temperature sensor defective		1. Check or replace sensor electronic module (ISEM) 2. If available: Check connection cable between sensor and transmitter 3. Replace sensor
	Measured variable status		
	Quality	Bad	
	Quality substatus	Maintenance alarm	
	Coding (hex)	0x24 to 0x27	
	Status signal	F	
	Diagnostic behavior	Alarm	
	Influenced measured variables		
	▪ Oscillation amplitude 1 ▪ Oscillation amplitude 2 ▪ Application specific output ▪ Application specific output ▪ Signal asymmetry ▪ Carrier mass flow ▪ Carrier pipe temperature ▪ Target corrected volume flow ▪ Carrier corrected volume flow ▪ Concentration ▪ Oscillation damping 1 ▪ Oscillation damping 2 ▪ Density ▪ Oil density ▪ Water density ▪ Dynamic viscosity ▪ Sensor electronic temperature (ISEM) ▪ GSV flow	▪ GSV flow alternative ▪ Kinematic viscosity ▪ Mass flow ▪ Oil mass flow ▪ Water mass flow ▪ Index inhomogeneous medium ▪ Index suspended bubbles ▪ HBSI ▪ NSV flow ▪ NSV flow alternative ▪ External pressure ▪ Exciter current 1 ▪ Exciter current 2 ▪ Oscillation frequency 1 ▪ Oscillation frequency 2 ▪ S&W volume flow ▪ Reference density ▪ Reference density alternative	▪ Corrected volume flow ▪ Oil corrected volume flow ▪ Water corrected volume flow ▪ Oscillation damping fluctuation 1 ▪ Oscillation damping fluctuation 2 ▪ Frequency fluctuation 1 ▪ Frequency fluctuation 2 ▪ Target mass flow ▪ Carrier volume flow ▪ Target volume flow ▪ Temp. compensated dynamic viscosity ▪ Temp. compensated kinematic viscosity ▪ Temperature ▪ Status ▪ Volume flow ▪ Oil volume flow ▪ Water volume flow ▪ Water cut

Diagnostic information			Remedy instructions
No.	**Short text**		
046	Sensor limit exceeded		1. Inspect sensor 2. Check process condition
	Measured variable status [from the factory] [1]		
	Quality	Good	
	Quality substatus	Ok	
	Coding (hex)	0x80 to 0x83	
	Status signal	S	
	Diagnostic behavior	Warning	
	Influenced measured variables		
	▪ Oscillation amplitude 1 ▪ Oscillation amplitude 2 ▪ Application specific output ▪ Application specific output ▪ Signal asymmetry ▪ Carrier mass flow ▪ Carrier pipe temperature ▪ Target corrected volume flow ▪ Carrier corrected volume flow ▪ Concentration ▪ Oscillation damping 1 ▪ Oscillation damping 2 ▪ Density ▪ Oil density ▪ Water density ▪ Dynamic viscosity ▪ Sensor electronic temperature (ISEM) ▪ GSV flow	▪ GSV flow alternative ▪ Kinematic viscosity ▪ Mass flow ▪ Oil mass flow ▪ Water mass flow ▪ Index inhomogeneous medium ▪ Index suspended bubbles ▪ HBSI ▪ NSV flow ▪ NSV flow alternative ▪ External pressure ▪ Exciter current 1 ▪ Exciter current 2 ▪ Oscillation frequency 1 ▪ Oscillation frequency 2 ▪ S&W volume flow ▪ Reference density ▪ Reference density alternative	▪ Corrected volume flow ▪ Oil corrected volume flow ▪ Water corrected volume flow ▪ Oscillation damping fluctuation 1 ▪ Oscillation damping fluctuation 2 ▪ Frequency fluctuation 1 ▪ Frequency fluctuation 2 ▪ Target mass flow ▪ Carrier volume flow ▪ Target volume flow ▪ Temp. compensated dynamic viscosity ▪ Temp. compensated kinematic viscosity ▪ Temperature ▪ Status ▪ Volume flow ▪ Oil volume flow ▪ Water volume flow ▪ Water cut

1) Diagnostic behavior can be changed. This causes the overall status of the measured variable to change.

Diagnostic information			Remedy instructions
No.	**Short text**		
062	Sensor connection faulty		1. Check or replace sensor electronic module (ISEM) 2. If available: Check connection cable between sensor and transmitter 3. Replace sensor
	Measured variable status		
	Quality	Bad	
	Quality substatus	Maintenance alarm	
	Coding (hex)	0x24 to 0x27	
	Status signal	F	
	Diagnostic behavior	Alarm	
	Influenced measured variables		
	▪ Oscillation amplitude 1 ▪ Oscillation amplitude 2 ▪ Application specific output ▪ Application specific output ▪ Signal asymmetry ▪ Carrier mass flow ▪ Carrier pipe temperature ▪ Target corrected volume flow ▪ Carrier corrected volume flow ▪ Concentration ▪ Oscillation damping 1 ▪ Oscillation damping 2 ▪ Density ▪ Oil density ▪ Water density ▪ Dynamic viscosity ▪ Sensor electronic temperature (ISEM) ▪ GSV flow	▪ GSV flow alternative ▪ Kinematic viscosity ▪ Mass flow ▪ Oil mass flow ▪ Water mass flow ▪ Index inhomogeneous medium ▪ Index suspended bubbles ▪ HBSI ▪ NSV flow ▪ NSV flow alternative ▪ External pressure ▪ Exciter current 1 ▪ Exciter current 2 ▪ Oscillation frequency 1 ▪ Oscillation frequency 2 ▪ S&W volume flow ▪ Reference density ▪ Reference density alternative	▪ Corrected volume flow ▪ Oil corrected volume flow ▪ Water corrected volume flow ▪ Oscillation damping fluctuation 1 ▪ Oscillation damping fluctuation 2 ▪ Frequency fluctuation 1 ▪ Frequency fluctuation 2 ▪ Target mass flow ▪ Carrier volume flow ▪ Target volume flow ▪ Temp. compensated dynamic viscosity ▪ Temp. compensated kinematic viscosity ▪ Temperature ▪ Status ▪ Volume flow ▪ Oil volume flow ▪ Water volume flow ▪ Water cut

Diagnostic information			Remedy instructions
No.	**Short text**		
063	Exciter current faulty		1. Check or replace sensor electronic module (ISEM) 2. If available: Check connection cable between sensor and transmitter 3. Replace sensor
	Measured variable status		
	Quality	Bad	
	Quality substatus	Maintenance alarm	
	Coding (hex)	0x24 to 0x27	
	Status signal	S	
	Diagnostic behavior	Alarm	
	Influenced measured variables		
	▪ Oscillation amplitude 1 ▪ Oscillation amplitude 2 ▪ Application specific output ▪ Application specific output ▪ Signal asymmetry ▪ Carrier mass flow ▪ Carrier pipe temperature ▪ Target corrected volume flow ▪ Carrier corrected volume flow ▪ Concentration ▪ Oscillation damping 1 ▪ Oscillation damping 2 ▪ Density ▪ Oil density ▪ Water density ▪ Dynamic viscosity ▪ Sensor electronic temperature (ISEM)	▪ GSV flow ▪ GSV flow alternative ▪ Kinematic viscosity ▪ Mass flow ▪ Oil mass flow ▪ Water mass flow ▪ Index inhomogeneous medium ▪ Index suspended bubbles ▪ HBSI ▪ NSV flow ▪ NSV flow alternative ▪ External pressure ▪ Exciter current 1 ▪ Exciter current 2 ▪ Oscillation frequency 1 ▪ Oscillation frequency 2 ▪ S&W volume flow	▪ Reference density ▪ Reference density alternative ▪ Corrected volume flow ▪ Oil corrected volume flow ▪ Water corrected volume flow ▪ Target mass flow ▪ Carrier volume flow ▪ Target volume flow ▪ Temp. compensated dynamic viscosity ▪ Temp. compensated kinematic viscosity ▪ Temperature ▪ Status ▪ Volume flow ▪ Oil volume flow ▪ Water volume flow ▪ Water cut

Diagnostic information			Remedy instructions
No.	**Short text**		
082	Data storage		1. Check module connections 2. Contact service
	Measured variable status		
	Quality	Bad	
	Quality substatus	Maintenance alarm	
	Coding (hex)	0x24 to 0x27	
	Status signal	F	
	Diagnostic behavior	Alarm	
	Influenced measured variables		
	▪ Oscillation amplitude 1 ▪ Oscillation amplitude 2 ▪ Application specific output ▪ Application specific output ▪ Signal asymmetry ▪ Carrier mass flow ▪ Carrier pipe temperature ▪ Target corrected volume flow ▪ Carrier corrected volume flow ▪ Concentration ▪ Measured values 1 ▪ Measured values 2 ▪ Measured values 3 ▪ Oscillation damping 1 ▪ Oscillation damping 2 ▪ Density ▪ Oil density ▪ Water density ▪ Dynamic viscosity	▪ Sensor electronic temperature (ISEM) ▪ GSV flow ▪ GSV flow alternative ▪ Kinematic viscosity ▪ Mass flow ▪ Oil mass flow ▪ Water mass flow ▪ Index inhomogeneous medium ▪ Index suspended bubbles ▪ HBSI ▪ NSV flow ▪ NSV flow alternative ▪ External pressure ▪ Exciter current 1 ▪ Exciter current 2 ▪ Oscillation frequency 1 ▪ Oscillation frequency 2 ▪ S&W volume flow ▪ Reference density	▪ Reference density alternative ▪ Corrected volume flow ▪ Oil corrected volume flow ▪ Water corrected volume flow ▪ Oscillation damping fluctuation 1 ▪ Oscillation damping fluctuation 2 ▪ Frequency fluctuation 1 ▪ Frequency fluctuation 2 ▪ Target mass flow ▪ Carrier volume flow ▪ Target volume flow ▪ Temp. compensated dynamic viscosity ▪ Temp. compensated kinematic viscosity ▪ Temperature ▪ Status ▪ Volume flow ▪ Oil volume flow ▪ Water volume flow ▪ Water cut

Diagnostic information			Remedy instructions
No.	**Short text**		
083	Memory content		1. Restart device 2. Restore HistoROM S-DAT backup ('Device reset' parameter) 3. Replace HistoROM S-DAT
	Measured variable status		
	Quality	Bad	
	Quality substatus	Maintenance alarm	
	Coding (hex)	0x24 to 0x27	
	Status signal	F	
	Diagnostic behavior	Alarm	
	Influenced measured variables		
	▪ Oscillation amplitude 1 ▪ Oscillation amplitude 2 ▪ Application specific output ▪ Application specific output ▪ Signal asymmetry ▪ Carrier mass flow ▪ Carrier pipe temperature ▪ Target corrected volume flow ▪ Carrier corrected volume flow ▪ Concentration ▪ Measured values 1 ▪ Measured values 2 ▪ Measured values 3 ▪ Oscillation damping 1 ▪ Oscillation damping 2 ▪ Density ▪ Oil density ▪ Water density ▪ Dynamic viscosity	▪ Sensor electronic temperature (ISEM) ▪ GSV flow ▪ GSV flow alternative ▪ Kinematic viscosity ▪ Mass flow ▪ Oil mass flow ▪ Water mass flow ▪ Index inhomogeneous medium ▪ Index suspended bubbles ▪ HBSI ▪ NSV flow ▪ NSV flow alternative ▪ External pressure ▪ Exciter current 1 ▪ Exciter current 2 ▪ Oscillation frequency 1 ▪ Oscillation frequency 2 ▪ S&W volume flow ▪ Reference density	▪ Reference density alternative ▪ Corrected volume flow ▪ Oil corrected volume flow ▪ Water corrected volume flow ▪ Oscillation damping fluctuation 1 ▪ Oscillation damping fluctuation 2 ▪ Frequency fluctuation 1 ▪ Frequency fluctuation 2 ▪ Target mass flow ▪ Carrier volume flow ▪ Target volume flow ▪ Temp. compensated dynamic viscosity ▪ Temp. compensated kinematic viscosity ▪ Temperature ▪ Status ▪ Volume flow ▪ Oil volume flow ▪ Water volume flow ▪ Water cut

Diagnostic information			Remedy instructions
No.	**Short text**		
140	Sensor signal asymmetrical		1. Check or replace sensor electronic module (ISEM) 2. If available: Check connection cable between sensor and transmitter 3. Replace sensor
	Measured variable status [from the factory] [1]		
	Quality	Good	
	Quality substatus	Ok	
	Coding (hex)	0x80 to 0x83	
	Status signal	S	
	Diagnostic behavior	Alarm	
	Influenced measured variables		
	▪ Oscillation amplitude 1 ▪ Oscillation amplitude 2 ▪ Application specific output ▪ Application specific output ▪ Signal asymmetry ▪ Carrier mass flow ▪ Carrier pipe temperature ▪ Target corrected volume flow ▪ Carrier corrected volume flow ▪ Concentration ▪ Measured values 1 ▪ Measured values 2 ▪ Measured values 3 ▪ Oscillation damping 1 ▪ Oscillation damping 2 ▪ Density ▪ Oil density ▪ Water density ▪ Dynamic viscosity	▪ Sensor electronic temperature (ISEM) ▪ GSV flow ▪ GSV flow alternative ▪ Kinematic viscosity ▪ Mass flow ▪ Oil mass flow ▪ Water mass flow ▪ Index inhomogeneous medium ▪ Index suspended bubbles ▪ HBSI ▪ NSV flow ▪ NSV flow alternative ▪ External pressure ▪ Exciter current 1 ▪ Exciter current 2 ▪ Oscillation frequency 1 ▪ Oscillation frequency 2 ▪ S&W volume flow ▪ Reference density	▪ Reference density alternative ▪ Corrected volume flow ▪ Oil corrected volume flow ▪ Water corrected volume flow ▪ Oscillation damping fluctuation 1 ▪ Oscillation damping fluctuation 2 ▪ Frequency fluctuation 1 ▪ Frequency fluctuation 2 ▪ Target mass flow ▪ Carrier volume flow ▪ Target volume flow ▪ Temp. compensated dynamic viscosity ▪ Temp. compensated kinematic viscosity ▪ Temperature ▪ Status ▪ Volume flow ▪ Oil volume flow ▪ Water volume flow ▪ Water cut

1) Diagnostic behavior can be changed. This causes the overall status of the measured variable to change.

Diagnostic information			Remedy instructions
No.	**Short text**		
144	Measurement error too high		1. Check or change sensor 2. Check process conditions
	Measured variable status [from the factory] [1]		
	Quality	Good	
	Quality substatus	Ok	
	Coding (hex)	0x80 to 0x83	
	Status signal	F	
	Diagnostic behavior	Alarm	
	Influenced measured variables		
	▪ Oscillation amplitude 1 ▪ Oscillation amplitude 2 ▪ Application specific output ▪ Application specific output ▪ Signal asymmetry ▪ Carrier mass flow ▪ Carrier pipe temperature ▪ Target corrected volume flow ▪ Carrier corrected volume flow ▪ Concentration ▪ Oscillation damping 1 ▪ Oscillation damping 2 ▪ Density ▪ Oil density ▪ Water density ▪ Dynamic viscosity ▪ Sensor electronic temperature (ISEM) ▪ GSV flow	▪ GSV flow alternative ▪ Kinematic viscosity ▪ Mass flow ▪ Oil mass flow ▪ Water mass flow ▪ Index inhomogeneous medium ▪ Index suspended bubbles ▪ HBSI ▪ NSV flow ▪ NSV flow alternative ▪ External pressure ▪ Exciter current 1 ▪ Exciter current 2 ▪ Oscillation frequency 1 ▪ Oscillation frequency 2 ▪ S&W volume flow ▪ Reference density ▪ Reference density alternative	▪ Corrected volume flow ▪ Oil corrected volume flow ▪ Water corrected volume flow ▪ Oscillation damping fluctuation 1 ▪ Oscillation damping fluctuation 2 ▪ Frequency fluctuation 1 ▪ Frequency fluctuation 2 ▪ Target mass flow ▪ Carrier volume flow ▪ Target volume flow ▪ Temp. compensated dynamic viscosity ▪ Temp. compensated kinematic viscosity ▪ Temperature ▪ Status ▪ Volume flow ▪ Oil volume flow ▪ Water volume flow ▪ Water cut

1) Diagnostic behavior can be changed. This causes the overall status of the measured variable to change.

12.7.2 Diagnostic of electronic

Diagnostic information			Remedy instructions
No.	**Short text**		
201	Device failure		1. Restart device 2. Contact service
	Measured variable status		
	Quality	Bad	
	Quality substatus	Maintenance alarm	
	Coding (hex)	0x24 to 0x27	
	Status signal	F	
	Diagnostic behavior	Alarm	
	Influenced measured variables		
	▪ Oscillation amplitude 1 ▪ Oscillation amplitude 2 ▪ Application specific output ▪ Application specific output ▪ Signal asymmetry ▪ Carrier mass flow ▪ Carrier pipe temperature ▪ Target corrected volume flow ▪ Carrier corrected volume flow ▪ Concentration ▪ Measured values 1 ▪ Measured values 2 ▪ Measured values 3 ▪ Oscillation damping 1 ▪ Oscillation damping 2 ▪ Density ▪ Oil density ▪ Water density ▪ Dynamic viscosity	▪ Sensor electronic temperature (ISEM) ▪ GSV flow ▪ GSV flow alternative ▪ Kinematic viscosity ▪ Mass flow ▪ Oil mass flow ▪ Water mass flow ▪ Index inhomogeneous medium ▪ Index suspended bubbles ▪ HBSI ▪ NSV flow ▪ NSV flow alternative ▪ External pressure ▪ Exciter current 1 ▪ Exciter current 2 ▪ Oscillation frequency 1 ▪ Oscillation frequency 2 ▪ S&W volume flow ▪ Reference density	▪ Reference density alternative ▪ Corrected volume flow ▪ Oil corrected volume flow ▪ Water corrected volume flow ▪ Oscillation damping fluctuation 1 ▪ Oscillation damping fluctuation 2 ▪ Frequency fluctuation 1 ▪ Frequency fluctuation 2 ▪ Target mass flow ▪ Carrier volume flow ▪ Target volume flow ▪ Temp. compensated dynamic viscosity ▪ Temp. compensated kinematic viscosity ▪ Temperature ▪ Status ▪ Volume flow ▪ Oil volume flow ▪ Water volume flow ▪ Water cut

Diagnostic information			Remedy instructions
No.	**Short text**		
242	Software incompatible		1. Check software 2. Flash or change main electronics module
	Measured variable status		
	Quality	Bad	
	Quality substatus	Maintenance alarm	
	Coding (hex)	0x24 to 0x27	
	Status signal	F	
	Diagnostic behavior	Alarm	
	Influenced measured variables		
	▪ Oscillation amplitude 1 ▪ Oscillation amplitude 2 ▪ Application specific output ▪ Application specific output ▪ Signal asymmetry ▪ Carrier mass flow ▪ Carrier pipe temperature ▪ Target corrected volume flow ▪ Carrier corrected volume flow ▪ Concentration ▪ Measured values 1 ▪ Measured values 2 ▪ Measured values 3 ▪ Oscillation damping 1 ▪ Oscillation damping 2 ▪ Density ▪ Oil density ▪ Water density ▪ Dynamic viscosity	▪ Sensor electronic temperature (ISEM) ▪ GSV flow ▪ GSV flow alternative ▪ Kinematic viscosity ▪ Mass flow ▪ Oil mass flow ▪ Water mass flow ▪ Index inhomogeneous medium ▪ Index suspended bubbles ▪ HBSI ▪ NSV flow ▪ NSV flow alternative ▪ External pressure ▪ Exciter current 1 ▪ Exciter current 2 ▪ Oscillation frequency 1 ▪ Oscillation frequency 2 ▪ S&W volume flow ▪ Reference density	▪ Reference density alternative ▪ Corrected volume flow ▪ Oil corrected volume flow ▪ Water corrected volume flow ▪ Oscillation damping fluctuation 1 ▪ Oscillation damping fluctuation 2 ▪ Frequency fluctuation 1 ▪ Frequency fluctuation 2 ▪ Target mass flow ▪ Carrier volume flow ▪ Target volume flow ▪ Temp. compensated dynamic viscosity ▪ Temp. compensated kinematic viscosity ▪ Temperature ▪ Status ▪ Volume flow ▪ Oil volume flow ▪ Water volume flow ▪ Water cut

Diagnostic information			Remedy instructions
No.	**Short text**		
252	Modules incompatible		1. Check electronic modules 2. Check if correct modules are available (e.g. NEx, Ex) 3. Replace electronic modules
	Measured variable status		
	Quality	Bad	
	Quality substatus	Maintenance alarm	
	Coding (hex)	0x24 to 0x27	
	Status signal	F	
	Diagnostic behavior	Alarm	
	Influenced measured variables		
	▪ Oscillation amplitude 1 ▪ Oscillation amplitude 2 ▪ Application specific output ▪ Application specific output ▪ Signal asymmetry ▪ Carrier mass flow ▪ Carrier pipe temperature ▪ Target corrected volume flow ▪ Carrier corrected volume flow ▪ Concentration ▪ Measured values 1 ▪ Measured values 2 ▪ Measured values 3 ▪ Oscillation damping 1 ▪ Oscillation damping 2 ▪ Density ▪ Oil density ▪ Water density ▪ Dynamic viscosity	▪ Sensor electronic temperature (ISEM) ▪ GSV flow ▪ GSV flow alternative ▪ Kinematic viscosity ▪ Mass flow ▪ Oil mass flow ▪ Water mass flow ▪ Index inhomogeneous medium ▪ Index suspended bubbles ▪ HBSI ▪ NSV flow ▪ NSV flow alternative ▪ External pressure ▪ Exciter current 1 ▪ Exciter current 2 ▪ Oscillation frequency 1 ▪ Oscillation frequency 2 ▪ S&W volume flow ▪ Reference density	▪ Reference density alternative ▪ Corrected volume flow ▪ Oil corrected volume flow ▪ Water corrected volume flow ▪ Oscillation damping fluctuation 1 ▪ Oscillation damping fluctuation 2 ▪ Frequency fluctuation 1 ▪ Frequency fluctuation 2 ▪ Target mass flow ▪ Carrier volume flow ▪ Target volume flow ▪ Temp. compensated dynamic viscosity ▪ Temp. compensated kinematic viscosity ▪ Temperature ▪ Status ▪ Volume flow ▪ Oil volume flow ▪ Water volume flow ▪ Water cut

Diagnostic information			Remedy instructions
No.	**Short text**		
252	Modules incompatible		1. Check if correct electronic modul is plugged 2. Replace electronic module
	Measured variable status		
	Quality	Bad	
	Quality substatus	Maintenance alarm	
	Coding (hex)	0x24 to 0x27	
	Status signal	F	
	Diagnostic behavior	Alarm	
	Influenced measured variables		
	▪ Oscillation amplitude 1 ▪ Oscillation amplitude 2 ▪ Application specific output ▪ Application specific output ▪ Signal asymmetry ▪ Carrier mass flow ▪ Carrier pipe temperature ▪ Concentration ▪ Measured values 1 ▪ Measured values 2 ▪ Measured values 3 ▪ Oscillation damping 1 ▪ Oscillation damping 2	▪ Density ▪ Dynamic viscosity ▪ Sensor electronic temperature (ISEM) ▪ Kinematic viscosity ▪ Mass flow ▪ Index inhomogeneous medium ▪ Index suspended bubbles ▪ HBSI ▪ External pressure ▪ Exciter current 1 ▪ Exciter current 2 ▪ Oscillation frequency 1 ▪ Oscillation frequency 2	▪ Reference density ▪ Corrected volume flow ▪ Oscillation damping fluctuation 1 ▪ Oscillation damping fluctuation 2 ▪ Frequency fluctuation 1 ▪ Frequency fluctuation 2 ▪ Target mass flow ▪ Temp. compensated dynamic viscosity ▪ Temp. compensated kinematic viscosity ▪ Temperature ▪ Status ▪ Volume flow

Diagnostic information			Remedy instructions
No.	**Short text**		
262	Sensor electronic connection faulty		1. Check or replace connection cable between sensor electronic module (ISEM) and main electronics 2. Check or replace ISEM or main electronics
	Measured variable status		
	Quality	Bad	
	Quality substatus	Maintenance alarm	
	Coding (hex)	0x24 to 0x27	
	Status signal	F	
	Diagnostic behavior	Alarm	
	Influenced measured variables		
	▪ Oscillation amplitude 1 ▪ Oscillation amplitude 2 ▪ Application specific output ▪ Application specific output ▪ Signal asymmetry ▪ Carrier mass flow ▪ Carrier pipe temperature ▪ Target corrected volume flow ▪ Carrier corrected volume flow ▪ Concentration ▪ Measured values 1 ▪ Measured values 2 ▪ Measured values 3 ▪ Oscillation damping 1 ▪ Oscillation damping 2 ▪ Density ▪ Oil density ▪ Water density ▪ Dynamic viscosity	▪ Sensor electronic temperature (ISEM) ▪ GSV flow ▪ GSV flow alternative ▪ Kinematic viscosity ▪ Mass flow ▪ Oil mass flow ▪ Water mass flow ▪ Index inhomogeneous medium ▪ Index suspended bubbles ▪ HBSI ▪ NSV flow ▪ NSV flow alternative ▪ External pressure ▪ Exciter current 1 ▪ Exciter current 2 ▪ Oscillation frequency 1 ▪ Oscillation frequency 2 ▪ S&W volume flow ▪ Reference density	▪ Reference density alternative ▪ Corrected volume flow ▪ Oil corrected volume flow ▪ Water corrected volume flow ▪ Oscillation damping fluctuation 1 ▪ Oscillation damping fluctuation 2 ▪ Frequency fluctuation 1 ▪ Frequency fluctuation 2 ▪ Target mass flow ▪ Carrier volume flow ▪ Target volume flow ▪ Temp. compensated dynamic viscosity ▪ Temp. compensated kinematic viscosity ▪ Temperature ▪ Status ▪ Volume flow ▪ Oil volume flow ▪ Water volume flow ▪ Water cut

Diagnostic information			Remedy instructions
No.	**Short text**		
270	Main electronic failure		Change main electronic module
	Measured variable status		
	Quality	Bad	
	Quality substatus	Maintenance alarm	
	Coding (hex)	0x24 to 0x27	
	Status signal	F	
	Diagnostic behavior	Alarm	
	Influenced measured variables		
	▪ Oscillation amplitude 1 ▪ Oscillation amplitude 2 ▪ Application specific output ▪ Application specific output ▪ Signal asymmetry ▪ Carrier mass flow ▪ Carrier pipe temperature ▪ Target corrected volume flow ▪ Carrier corrected volume flow ▪ Concentration ▪ Measured values 1 ▪ Measured values 2 ▪ Measured values 3 ▪ Oscillation damping 1 ▪ Oscillation damping 2 ▪ Density ▪ Oil density ▪ Water density ▪ Dynamic viscosity	▪ Sensor electronic temperature (ISEM) ▪ GSV flow ▪ GSV flow alternative ▪ Kinematic viscosity ▪ Mass flow ▪ Oil mass flow ▪ Water mass flow ▪ Index inhomogeneous medium ▪ Index suspended bubbles ▪ HBSI ▪ NSV flow ▪ NSV flow alternative ▪ External pressure ▪ Exciter current 1 ▪ Exciter current 2 ▪ Oscillation frequency 1 ▪ Oscillation frequency 2 ▪ S&W volume flow ▪ Reference density	▪ Reference density alternative ▪ Corrected volume flow ▪ Oil corrected volume flow ▪ Water corrected volume flow ▪ Oscillation damping fluctuation 1 ▪ Oscillation damping fluctuation 2 ▪ Frequency fluctuation 1 ▪ Frequency fluctuation 2 ▪ Target mass flow ▪ Carrier volume flow ▪ Target volume flow ▪ Temp. compensated dynamic viscosity ▪ Temp. compensated kinematic viscosity ▪ Temperature ▪ Status ▪ Volume flow ▪ Oil volume flow ▪ Water volume flow ▪ Water cut

Diagnostic information			Remedy instructions
No.	**Short text**		
271	Main electronic failure		1. Restart device 2. Change main electronic module
	Measured variable status		
	Quality	Bad	
	Quality substatus	Maintenance alarm	
	Coding (hex)	0x24 to 0x27	
	Status signal	F	
	Diagnostic behavior	Alarm	
	Influenced measured variables		
	▪ Oscillation amplitude 1 ▪ Oscillation amplitude 2 ▪ Application specific output ▪ Application specific output ▪ Signal asymmetry ▪ Carrier mass flow ▪ Carrier pipe temperature ▪ Target corrected volume flow ▪ Carrier corrected volume flow ▪ Concentration ▪ Measured values 1 ▪ Measured values 2 ▪ Measured values 3 ▪ Oscillation damping 1 ▪ Oscillation damping 2 ▪ Density ▪ Oil density ▪ Water density ▪ Dynamic viscosity	▪ Sensor electronic temperature (ISEM) ▪ GSV flow ▪ GSV flow alternative ▪ Kinematic viscosity ▪ Mass flow ▪ Oil mass flow ▪ Water mass flow ▪ Index inhomogeneous medium ▪ Index suspended bubbles ▪ HBSI ▪ NSV flow ▪ NSV flow alternative ▪ External pressure ▪ Exciter current 1 ▪ Exciter current 2 ▪ Oscillation frequency 1 ▪ Oscillation frequency 2 ▪ S&W volume flow ▪ Reference density	▪ Reference density alternative ▪ Corrected volume flow ▪ Oil corrected volume flow ▪ Water corrected volume flow ▪ Oscillation damping fluctuation 1 ▪ Oscillation damping fluctuation 2 ▪ Frequency fluctuation 1 ▪ Frequency fluctuation 2 ▪ Target mass flow ▪ Carrier volume flow ▪ Target volume flow ▪ Temp. compensated dynamic viscosity ▪ Temp. compensated kinematic viscosity ▪ Temperature ▪ Status ▪ Volume flow ▪ Oil volume flow ▪ Water volume flow ▪ Water cut

Diagnostic information			Remedy instructions
No.	**Short text**		
272	Main electronic failure		1. Restart device 2. Contact service
	Measured variable status		
	Quality	Bad	
	Quality substatus	Maintenance alarm	
	Coding (hex)	0x24 to 0x27	
	Status signal	F	
	Diagnostic behavior	Alarm	
	Influenced measured variables		
	▪ Oscillation amplitude 1 ▪ Oscillation amplitude 2 ▪ Application specific output ▪ Application specific output ▪ Signal asymmetry ▪ Carrier mass flow ▪ Carrier pipe temperature ▪ Target corrected volume flow ▪ Carrier corrected volume flow ▪ Concentration ▪ Measured values 1 ▪ Measured values 2 ▪ Measured values 3 ▪ Oscillation damping 1 ▪ Oscillation damping 2 ▪ Density ▪ Oil density ▪ Water density ▪ Dynamic viscosity	▪ Sensor electronic temperature (ISEM) ▪ GSV flow ▪ GSV flow alternative ▪ Kinematic viscosity ▪ Mass flow ▪ Oil mass flow ▪ Water mass flow ▪ Index inhomogeneous medium ▪ Index suspended bubbles ▪ HBSI ▪ NSV flow ▪ NSV flow alternative ▪ External pressure ▪ Exciter current 1 ▪ Exciter current 2 ▪ Oscillation frequency 1 ▪ Oscillation frequency 2 ▪ S&W volume flow ▪ Reference density	▪ Reference density alternative ▪ Corrected volume flow ▪ Oil corrected volume flow ▪ Water corrected volume flow ▪ Oscillation damping fluctuation 1 ▪ Oscillation damping fluctuation 2 ▪ Frequency fluctuation 1 ▪ Frequency fluctuation 2 ▪ Target mass flow ▪ Carrier volume flow ▪ Target volume flow ▪ Temp. compensated dynamic viscosity ▪ Temp. compensated kinematic viscosity ▪ Temperature ▪ Status ▪ Volume flow ▪ Oil volume flow ▪ Water volume flow ▪ Water cut

Diagnostic information		Remedy instructions
No.	**Short text**	
273	Main electronic failure	Change electronic
	Measured variable status	
	Quality: Bad	
	Quality substatus: Maintenance alarm	
	Coding (hex): 0x24 to 0x27	
	Status signal: F	
	Diagnostic behavior: Alarm	
	Influenced measured variables	
	▪ Oscillation amplitude 1 ▪ Oscillation amplitude 2 ▪ Application specific output ▪ Application specific output ▪ Signal asymmetry ▪ Carrier mass flow ▪ Carrier pipe temperature ▪ Target corrected volume flow ▪ Carrier corrected volume flow ▪ Concentration ▪ Measured values 1 ▪ Measured values 2 ▪ Measured values 3 ▪ Oscillation damping 1 ▪ Oscillation damping 2 ▪ Density ▪ Oil density ▪ Water density ▪ Dynamic viscosity ▪ Sensor electronic temperature (ISEM) ▪ GSV flow ▪ GSV flow alternative ▪ Kinematic viscosity ▪ Mass flow ▪ Oil mass flow ▪ Water mass flow ▪ Index inhomogeneous medium ▪ Index suspended bubbles ▪ HBSI ▪ NSV flow ▪ NSV flow alternative ▪ External pressure ▪ Exciter current 1 ▪ Exciter current 2 ▪ Oscillation frequency 1 ▪ Oscillation frequency 2 ▪ S&W volume flow ▪ Reference density ▪ Reference density alternative ▪ Corrected volume flow ▪ Oil corrected volume flow ▪ Water corrected volume flow ▪ Oscillation damping fluctuation 1 ▪ Oscillation damping fluctuation 2 ▪ Frequency fluctuation 1 ▪ Frequency fluctuation 2 ▪ Target mass flow ▪ Carrier volume flow ▪ Target volume flow ▪ Temp. compensated dynamic viscosity ▪ Temp. compensated kinematic viscosity ▪ Temperature ▪ Status ▪ Volume flow ▪ Oil volume flow ▪ Water volume flow ▪ Water cut	

Diagnostic information		Remedy instructions
No.	**Short text**	
275	I/O module 1 to n defective	Change I/O module
	Measured variable status	
	Quality: Bad	
	Quality substatus: Maintenance alarm	
	Coding (hex): 0x24 to 0x27	
	Status signal: F	
	Diagnostic behavior: Alarm	
	Influenced measured variables	
	▪ Oscillation amplitude 1 ▪ Oscillation amplitude 2 ▪ Application specific output ▪ Application specific output ▪ Signal asymmetry ▪ Carrier mass flow ▪ Carrier pipe temperature ▪ Concentration ▪ Measured values 1 ▪ Measured values 2 ▪ Measured values 3 ▪ Oscillation damping 1 ▪ Oscillation damping 2 ▪ Density ▪ Dynamic viscosity ▪ Sensor electronic temperature (ISEM) ▪ Kinematic viscosity ▪ Mass flow ▪ Index inhomogeneous medium ▪ Index suspended bubbles ▪ HBSI ▪ External pressure ▪ Exciter current 1 ▪ Exciter current 2 ▪ Oscillation frequency 1 ▪ Oscillation frequency 2 ▪ Reference density ▪ Corrected volume flow ▪ Oscillation damping fluctuation 1 ▪ Oscillation damping fluctuation 2 ▪ Frequency fluctuation 1 ▪ Frequency fluctuation 2 ▪ Target mass flow ▪ Temp. compensated dynamic viscosity ▪ Temp. compensated kinematic viscosity ▪ Temperature ▪ Status ▪ Volume flow	

Diagnostic information			Remedy instructions
No.	Short text		
276	I/O module 1 to n faulty		1. Restart device 2. Change I/O module
	Measured variable status		
	Quality	Bad	
	Quality substatus	Maintenance alarm	
	Coding (hex)	0x24 to 0x27	
	Status signal	F	
	Diagnostic behavior	Alarm	
	Influenced measured variables		
	▪ Oscillation amplitude 1 ▪ Oscillation amplitude 2 ▪ Application specific output ▪ Application specific output ▪ Signal asymmetry ▪ Carrier mass flow ▪ Carrier pipe temperature ▪ Target corrected volume flow ▪ Carrier corrected volume flow ▪ Concentration ▪ Measured values 1 ▪ Measured values 2 ▪ Measured values 3 ▪ Oscillation damping 1	▪ Oscillation damping 2 ▪ Density ▪ Dynamic viscosity ▪ Sensor electronic temperature (ISEM) ▪ Kinematic viscosity ▪ Mass flow ▪ Index inhomogeneous medium ▪ Index suspended bubbles ▪ HBSI ▪ External pressure ▪ Exciter current 1 ▪ Exciter current 2 ▪ Oscillation frequency 1 ▪ Oscillation frequency 2	▪ Reference density ▪ Corrected volume flow ▪ Oscillation damping fluctuation 1 ▪ Oscillation damping fluctuation 2 ▪ Frequency fluctuation 1 ▪ Frequency fluctuation 2 ▪ Target mass flow ▪ Carrier volume flow ▪ Target volume flow ▪ Temp. compensated dynamic viscosity ▪ Temp. compensated kinematic viscosity ▪ Temperature ▪ Status ▪ Volume flow

Diagnostic information			Remedy instructions
No.	Short text		
283	Memory content		1. Reset device 2. Contact service
	Measured variable status		
	Quality	Bad	
	Quality substatus	Maintenance alarm	
	Coding (hex)	0x24 to 0x27	
	Status signal	F	
	Diagnostic behavior	Alarm	
	Influenced measured variables		
	▪ Oscillation amplitude 1 ▪ Oscillation amplitude 2 ▪ Application specific output ▪ Application specific output ▪ Signal asymmetry ▪ Carrier mass flow ▪ Carrier pipe temperature ▪ Target corrected volume flow ▪ Carrier corrected volume flow ▪ Concentration ▪ Measured values 1 ▪ Measured values 2 ▪ Measured values 3 ▪ Oscillation damping 1 ▪ Oscillation damping 2 ▪ Density ▪ Oil density ▪ Water density ▪ Dynamic viscosity	▪ Sensor electronic temperature (ISEM) ▪ GSV flow ▪ GSV flow alternative ▪ Kinematic viscosity ▪ Mass flow ▪ Oil mass flow ▪ Water mass flow ▪ Index inhomogeneous medium ▪ Index suspended bubbles ▪ HBSI ▪ NSV flow ▪ NSV flow alternative ▪ External pressure ▪ Exciter current 1 ▪ Exciter current 2 ▪ Oscillation frequency 1 ▪ Oscillation frequency 2 ▪ S&W volume flow ▪ Reference density	▪ Reference density alternative ▪ Corrected volume flow ▪ Oil corrected volume flow ▪ Water corrected volume flow ▪ Oscillation damping fluctuation 1 ▪ Oscillation damping fluctuation 2 ▪ Frequency fluctuation 1 ▪ Frequency fluctuation 2 ▪ Target mass flow ▪ Carrier volume flow ▪ Target volume flow ▪ Temp. compensated dynamic viscosity ▪ Temp. compensated kinematic viscosity ▪ Temperature ▪ Status ▪ Volume flow ▪ Oil volume flow ▪ Water volume flow ▪ Water cut

Diagnostic information		Remedy instructions
No.	**Short text**	
302	Device verification active	Device verification active, please wait.
	Measured variable status	
	Quality: Good	
	Quality substatus: Function check	
	Coding (hex): 0xBC to 0xBF	
	Status signal: C	
	Diagnostic behavior: Warning	
	Influenced measured variables	
	▪ Oscillation amplitude 1 ▪ Oscillation amplitude 2 ▪ Application specific output ▪ Application specific output ▪ Signal asymmetry ▪ Carrier mass flow ▪ Carrier pipe temperature ▪ Target corrected volume flow ▪ Carrier corrected volume flow ▪ Concentration ▪ Measured values 1 ▪ Measured values 2 ▪ Measured values 3 ▪ Oscillation damping 1 ▪ Oscillation damping 2 ▪ Density ▪ Oil density ▪ Water density ▪ Dynamic viscosity ▪ Sensor electronic temperature (ISEM) ▪ GSV flow ▪ GSV flow alternative ▪ Kinematic viscosity ▪ Mass flow ▪ Oil mass flow ▪ Water mass flow ▪ Index inhomogeneous medium ▪ Index suspended bubbles ▪ HBSI ▪ NSV flow ▪ NSV flow alternative ▪ External pressure ▪ Exciter current 1 ▪ Exciter current 2 ▪ Oscillation frequency 1 ▪ Oscillation frequency 2 ▪ S&W volume flow ▪ Reference density ▪ Reference density alternative ▪ Corrected volume flow ▪ Oil corrected volume flow ▪ Water corrected volume flow ▪ Oscillation damping fluctuation 1 ▪ Oscillation damping fluctuation 2 ▪ Frequency fluctuation 1 ▪ Frequency fluctuation 2 ▪ Target mass flow ▪ Carrier volume flow ▪ Target volume flow ▪ Temp. compensated dynamic viscosity ▪ Temp. compensated kinematic viscosity ▪ Temperature ▪ Status ▪ Volume flow ▪ Oil volume flow ▪ Water volume flow ▪ Water cut	

Diagnostic information		Remedy instructions
No.	**Short text**	
303	I/O 1 to n configuration changed	1. Apply I/O module configuration (parameter 'Apply I/O configuration') 2. Afterwards reload device description and check wiring
	Measured variable status	
	Quality: Good	
	Quality substatus: Ok	
	Coding (hex): 0x80 to 0x83	
	Status signal: M	
	Diagnostic behavior: Warning	
	Influenced measured variables	
	–	

Diagnostic information			Remedy instructions
No.	**Short text**		
311	Electronic failure		1. Do not reset device 2. Contact service
	Measured variable status		
	Quality	Bad	
	Quality substatus	Maintenance alarm	
	Coding (hex)	0x24 to 0x27	
	Status signal	M	
	Diagnostic behavior	Warning	
	Influenced measured variables		
	▪ Oscillation amplitude 1 ▪ Oscillation amplitude 2 ▪ Application specific output ▪ Application specific output ▪ Signal asymmetry ▪ Carrier mass flow ▪ Carrier pipe temperature ▪ Target corrected volume flow ▪ Carrier corrected volume flow ▪ Concentration ▪ Measured values 1 ▪ Measured values 2 ▪ Measured values 3 ▪ Oscillation damping 1 ▪ Oscillation damping 2 ▪ Density ▪ Oil density ▪ Water density ▪ Dynamic viscosity	▪ Sensor electronic temperature (ISEM) ▪ GSV flow ▪ GSV flow alternative ▪ Kinematic viscosity ▪ Mass flow ▪ Oil mass flow ▪ Water mass flow ▪ Index inhomogeneous medium ▪ Index suspended bubbles ▪ HBSI ▪ NSV flow ▪ NSV flow alternative ▪ External pressure ▪ Exciter current 1 ▪ Exciter current 2 ▪ Oscillation frequency 1 ▪ Oscillation frequency 2 ▪ S&W volume flow ▪ Reference density	▪ Reference density alternative ▪ Corrected volume flow ▪ Oil corrected volume flow ▪ Water corrected volume flow ▪ Oscillation damping fluctuation 1 ▪ Oscillation damping fluctuation 2 ▪ Frequency fluctuation 1 ▪ Frequency fluctuation 2 ▪ Target mass flow ▪ Carrier volume flow ▪ Target volume flow ▪ Temp. compensated dynamic viscosity ▪ Temp. compensated kinematic viscosity ▪ Temperature ▪ Status ▪ Volume flow ▪ Oil volume flow ▪ Water volume flow ▪ Water cut

Diagnostic information		Remedy instructions
No.	**Short text**	
332	Writing in HistoROM backup failed	Replace user interface board Ex d/XP: replace transmitter
	Measured variable status	
	Quality: Bad	
	Quality substatus: Maintenance alarm	
	Coding (hex): 0x24 to 0x27	
	Status signal: F	
	Diagnostic behavior: Alarm	
	Influenced measured variables	
	▪ Oscillation amplitude 1 ▪ Oscillation amplitude 2 ▪ Application specific output ▪ Application specific output ▪ Signal asymmetry ▪ Carrier mass flow ▪ Carrier pipe temperature ▪ Target corrected volume flow ▪ Carrier corrected volume flow ▪ Concentration ▪ Oscillation damping 1 ▪ Oscillation damping 2 ▪ Density ▪ Oil density ▪ Water density ▪ Dynamic viscosity ▪ Sensor electronic temperature (ISEM) ▪ GSV flow ▪ GSV flow alternative ▪ Kinematic viscosity ▪ Mass flow ▪ Oil mass flow ▪ Water mass flow ▪ Index inhomogeneous medium ▪ Index suspended bubbles ▪ HBSI ▪ NSV flow ▪ NSV flow alternative ▪ External pressure ▪ Exciter current 1 ▪ Exciter current 2 ▪ Oscillation frequency 1 ▪ Oscillation frequency 2 ▪ S&W volume flow ▪ Reference density ▪ Reference density alternative ▪ Corrected volume flow ▪ Oil corrected volume flow ▪ Water corrected volume flow ▪ Oscillation damping fluctuation 1 ▪ Oscillation damping fluctuation 2 ▪ Frequency fluctuation 1 ▪ Frequency fluctuation 2 ▪ Target mass flow ▪ Carrier volume flow ▪ Target volume flow ▪ Temp. compensated dynamic viscosity ▪ Temp. compensated kinematic viscosity ▪ Temperature ▪ Status ▪ Volume flow ▪ Oil volume flow ▪ Water volume flow ▪ Water cut	

Diagnostic information		Remedy instructions
No.	**Short text**	
361	I/O module 1 to n faulty	1. Restart device 2. Check electronic modules 3. Change I/O Modul or main electronics
	Measured variable status	
	Quality: Bad	
	Quality substatus: Maintenance alarm	
	Coding (hex): 0x24 to 0x27	
	Status signal: F	
	Diagnostic behavior: Alarm	
	Influenced measured variables	
	▪ Oscillation amplitude 1 ▪ Oscillation amplitude 2 ▪ Application specific output ▪ Application specific output ▪ Signal asymmetry ▪ Carrier mass flow ▪ Carrier pipe temperature ▪ Concentration ▪ Measured values 1 ▪ Measured values 2 ▪ Measured values 3 ▪ Oscillation damping 1 ▪ Oscillation damping 2 ▪ Density ▪ Dynamic viscosity ▪ Sensor electronic temperature (ISEM) ▪ Kinematic viscosity ▪ Mass flow ▪ Index inhomogeneous medium ▪ Index suspended bubbles ▪ HBSI ▪ External pressure ▪ Exciter current 1 ▪ Exciter current 2 ▪ Oscillation frequency 1 ▪ Oscillation frequency 2 ▪ Reference density ▪ Corrected volume flow ▪ Oscillation damping fluctuation 1 ▪ Oscillation damping fluctuation 2 ▪ Frequency fluctuation 1 ▪ Frequency fluctuation 2 ▪ Target mass flow ▪ Temp. compensated dynamic viscosity ▪ Temp. compensated kinematic viscosity ▪ Temperature ▪ Status ▪ Volume flow	

Diagnostic information			Remedy instructions
No.	**Short text**		
372	Sensor electronic (ISEM) faulty		1. Restart device 2. Check if failure recurs 3. Replace sensor electronic module (ISEM)
	Measured variable status		
	Quality	Bad	
	Quality substatus	Maintenance alarm	
	Coding (hex)	0x24 to 0x27	
	Status signal	F	
	Diagnostic behavior	Alarm	
	Influenced measured variables		
	▪ Oscillation amplitude 1 ▪ Oscillation amplitude 2 ▪ Application specific output ▪ Application specific output ▪ Signal asymmetry ▪ Carrier mass flow ▪ Carrier pipe temperature ▪ Target corrected volume flow ▪ Carrier corrected volume flow ▪ Concentration ▪ Measured values 1 ▪ Measured values 2 ▪ Measured values 3 ▪ Oscillation damping 1 ▪ Oscillation damping 2 ▪ Density ▪ Oil density ▪ Water density ▪ Dynamic viscosity	▪ Sensor electronic temperature (ISEM) ▪ GSV flow ▪ GSV flow alternative ▪ Kinematic viscosity ▪ Mass flow ▪ Oil mass flow ▪ Water mass flow ▪ Index inhomogeneous medium ▪ Index suspended bubbles ▪ HBSI ▪ NSV flow ▪ NSV flow alternative ▪ External pressure ▪ Exciter current 1 ▪ Exciter current 2 ▪ Oscillation frequency 1 ▪ Oscillation frequency 2 ▪ S&W volume flow ▪ Reference density	▪ Reference density alternative ▪ Corrected volume flow ▪ Oil corrected volume flow ▪ Water corrected volume flow ▪ Oscillation damping fluctuation 1 ▪ Oscillation damping fluctuation 2 ▪ Frequency fluctuation 1 ▪ Frequency fluctuation 2 ▪ Target mass flow ▪ Carrier volume flow ▪ Target volume flow ▪ Temp. compensated dynamic viscosity ▪ Temp. compensated kinematic viscosity ▪ Temperature ▪ Status ▪ Volume flow ▪ Oil volume flow ▪ Water volume flow ▪ Water cut

Diagnostic information		Remedy instructions
No.	**Short text**	
373	Sensor electronic (ISEM) faulty	1. Transfer data or reset device 2. Contact service
	Measured variable status	
	Quality: Bad	
	Quality substatus: Maintenance alarm	
	Coding (hex): 0x24 to 0x27	
	Status signal: F	
	Diagnostic behavior: Alarm	
	Influenced measured variables	
	▪ Oscillation amplitude 1 ▪ Oscillation amplitude 2 ▪ Application specific output ▪ Application specific output ▪ Signal asymmetry ▪ Carrier mass flow ▪ Carrier pipe temperature ▪ Target corrected volume flow ▪ Carrier corrected volume flow ▪ Concentration ▪ Measured values 1 ▪ Measured values 2 ▪ Measured values 3 ▪ Oscillation damping 1 ▪ Oscillation damping 2 ▪ Density ▪ Oil density ▪ Water density ▪ Dynamic viscosity ▪ Sensor electronic temperature (ISEM) ▪ GSV flow ▪ GSV flow alternative ▪ Kinematic viscosity ▪ Mass flow ▪ Oil mass flow ▪ Water mass flow ▪ Index inhomogeneous medium ▪ Index suspended bubbles ▪ HBSI ▪ NSV flow ▪ NSV flow alternative ▪ External pressure ▪ Exciter current 1 ▪ Exciter current 2 ▪ Oscillation frequency 1 ▪ Oscillation frequency 2 ▪ S&W volume flow ▪ Reference density ▪ Reference density alternative ▪ Corrected volume flow ▪ Oil corrected volume flow ▪ Water corrected volume flow ▪ Oscillation damping fluctuation 1 ▪ Oscillation damping fluctuation 2 ▪ Frequency fluctuation 1 ▪ Frequency fluctuation 2 ▪ Target mass flow ▪ Carrier volume flow ▪ Target volume flow ▪ Temp. compensated dynamic viscosity ▪ Temp. compensated kinematic viscosity ▪ Temperature ▪ Status ▪ Volume flow ▪ Oil volume flow ▪ Water volume flow ▪ Water cut	

Diagnostic information		Remedy instructions
No.	**Short text**	
374	Sensor electronic (ISEM) faulty	1. Restart device 2. Check if failure recurs 3. Replace sensor electronic module (ISEM)
	Measured variable status [from the factory] [1]	
	Quality: Good	
	Quality substatus: Ok	
	Coding (hex): 0x80 to 0x83	
	Status signal: S	
	Diagnostic behavior: Warning	
	Influenced measured variables	
	▪ Oscillation amplitude 1 ▪ Oscillation amplitude 2 ▪ Application specific output ▪ Application specific output ▪ Signal asymmetry ▪ Carrier mass flow ▪ Carrier pipe temperature ▪ Concentration ▪ Oscillation damping 1 ▪ Oscillation damping 2 ▪ Density ▪ Dynamic viscosity ▪ Sensor electronic temperature (ISEM) ▪ Kinematic viscosity ▪ Mass flow ▪ Index inhomogeneous medium ▪ Index suspended bubbles ▪ HBSI ▪ External pressure ▪ Exciter current 1 ▪ Exciter current 2 ▪ Oscillation frequency 1 ▪ Oscillation frequency 2 ▪ Reference density ▪ Corrected volume flow ▪ Oscillation damping fluctuation 1 ▪ Oscillation damping fluctuation 2 ▪ Frequency fluctuation 1 ▪ Frequency fluctuation 2 ▪ Target mass flow ▪ Temp. compensated dynamic viscosity ▪ Temp. compensated kinematic viscosity ▪ Temperature ▪ Status ▪ Volume flow	

1) Diagnostic behavior can be changed. This causes the overall status of the measured variable to change.

Diagnostic information			Remedy instructions
No.	**Short text**		
375	I/O- 1 to n communication failed		1. Restart device 2. Check if failure recurs 3. Replace module rack inclusive electronic modules
	Measured variable status		
	Quality	Bad	
	Quality substatus	Maintenance alarm	
	Coding (hex)	0x24 to 0x27	
	Status signal	F	
	Diagnostic behavior	Alarm	
	Influenced measured variables		
	▪ Oscillation amplitude 1 ▪ Oscillation amplitude 2 ▪ Application specific output ▪ Application specific output ▪ Signal asymmetry ▪ Carrier mass flow ▪ Carrier pipe temperature ▪ Target corrected volume flow ▪ Carrier corrected volume flow ▪ Concentration ▪ Measured values 1 ▪ Measured values 2 ▪ Measured values 3 ▪ Oscillation damping 1 ▪ Oscillation damping 2 ▪ Density ▪ Oil density ▪ Water density	▪ Dynamic viscosity ▪ Sensor electronic temperature (ISEM) ▪ GSV flow ▪ GSV flow alternative ▪ Kinematic viscosity ▪ Mass flow ▪ Oil mass flow ▪ Water mass flow ▪ Index inhomogeneous medium ▪ Index suspended bubbles ▪ HBSI ▪ NSV flow ▪ NSV flow alternative ▪ External pressure ▪ Exciter current 1 ▪ Exciter current 2 ▪ Oscillation frequency 1 ▪ Oscillation frequency 2	▪ S&W volume flow ▪ Reference density ▪ Reference density alternative ▪ Corrected volume flow ▪ Oil corrected volume flow ▪ Water corrected volume flow ▪ Oscillation damping fluctuation 1 ▪ Oscillation damping fluctuation 2 ▪ Frequency fluctuation 1 ▪ Frequency fluctuation 2 ▪ Target mass flow ▪ Carrier volume flow ▪ Target volume flow ▪ Temp. compensated dynamic viscosity ▪ Temp. compensated kinematic viscosity ▪ Temperature ▪ Status ▪ Volume flow

Diagnostic information			Remedy instructions
No.	**Short text**		
378	Supply voltage ISEM faulty		Check supply voltage to the ISEM
	Measured variable status		
	Quality	Good	
	Quality substatus	Ok	
	Coding (hex)	0x80 to 0x83	
	Status signal	F	
	Diagnostic behavior	Alarm	
	Influenced measured variables		
	–		

Diagnostic information			Remedy instructions
No.	**Short text**		
382	Data storage		1. Insert T-DAT 2. Replace T-DAT
	Measured variable status		
	Quality	Bad	
	Quality substatus	Maintenance alarm	
	Coding (hex)	0x24 to 0x27	
	Status signal	F	
	Diagnostic behavior	Alarm	
	Influenced measured variables		
	▪ Oscillation amplitude 1 ▪ Oscillation amplitude 2 ▪ Application specific output ▪ Application specific output ▪ Signal asymmetry ▪ Carrier mass flow ▪ Carrier pipe temperature ▪ Target corrected volume flow ▪ Carrier corrected volume flow ▪ Concentration ▪ Measured values 1 ▪ Measured values 2 ▪ Measured values 3 ▪ Oscillation damping 1 ▪ Oscillation damping 2 ▪ Density ▪ Oil density ▪ Water density ▪ Dynamic viscosity	▪ Sensor electronic temperature (ISEM) ▪ GSV flow ▪ GSV flow alternative ▪ Kinematic viscosity ▪ Mass flow ▪ Oil mass flow ▪ Water mass flow ▪ Index inhomogeneous medium ▪ Index suspended bubbles ▪ HBSI ▪ NSV flow ▪ NSV flow alternative ▪ External pressure ▪ Exciter current 1 ▪ Exciter current 2 ▪ Oscillation frequency 1 ▪ Oscillation frequency 2 ▪ S&W volume flow ▪ Reference density	▪ Reference density alternative ▪ Corrected volume flow ▪ Oil corrected volume flow ▪ Water corrected volume flow ▪ Oscillation damping fluctuation 1 ▪ Oscillation damping fluctuation 2 ▪ Frequency fluctuation 1 ▪ Frequency fluctuation 2 ▪ Target mass flow ▪ Carrier volume flow ▪ Target volume flow ▪ Temp. compensated dynamic viscosity ▪ Temp. compensated kinematic viscosity ▪ Temperature ▪ Status ▪ Volume flow ▪ Oil volume flow ▪ Water volume flow ▪ Water cut

Diagnostic information			Remedy instructions
No.	**Short text**		
383	Memory content		1. Restart device 2. Delete T-DAT via 'Reset device' parameter 3. Replace T-DAT
	Measured variable status		
	Quality	Bad	
	Quality substatus	Maintenance alarm	
	Coding (hex)	0x24 to 0x27	
	Status signal	F	
	Diagnostic behavior	Alarm	
	Influenced measured variables		
	▪ Oscillation amplitude 1 ▪ Oscillation amplitude 2 ▪ Application specific output ▪ Application specific output ▪ Signal asymmetry ▪ Carrier mass flow ▪ Carrier pipe temperature ▪ Target corrected volume flow ▪ Carrier corrected volume flow ▪ Concentration ▪ Measured values 1 ▪ Measured values 2 ▪ Measured values 3 ▪ Oscillation damping 1 ▪ Oscillation damping 2 ▪ Density ▪ Oil density ▪ Water density	▪ Dynamic viscosity ▪ Sensor electronic temperature (ISEM) ▪ GSV flow ▪ GSV flow alternative ▪ Kinematic viscosity ▪ Mass flow ▪ Oil mass flow ▪ Water mass flow ▪ Index inhomogeneous medium ▪ Index suspended bubbles ▪ HBSI ▪ NSV flow ▪ NSV flow alternative ▪ External pressure ▪ Exciter current 1 ▪ Exciter current 2 ▪ Oscillation frequency 1 ▪ Oscillation frequency 2	▪ S&W volume flow ▪ Reference density ▪ Reference density alternative ▪ Corrected volume flow ▪ Oil corrected volume flow ▪ Water corrected volume flow ▪ Oscillation damping fluctuation 1 ▪ Oscillation damping fluctuation 2 ▪ Frequency fluctuation 1 ▪ Frequency fluctuation 2 ▪ Target mass flow ▪ Carrier volume flow ▪ Target volume flow ▪ Temp. compensated dynamic viscosity ▪ Temp. compensated kinematic viscosity ▪ Temperature ▪ Status ▪ Volume flow

Diagnostic information		Remedy instructions
No.	**Short text**	
387	HistoROM data faulty	Contact service organization
	Measured variable status	
	Quality: Bad	
	Quality substatus: Maintenance alarm	
	Coding (hex): 0x24 to 0x27	
	Status signal: F	
	Diagnostic behavior: Alarm	
	Influenced measured variables	
	▪ Oscillation amplitude 1 ▪ Oscillation amplitude 2 ▪ Application specific output ▪ Application specific output ▪ Signal asymmetry ▪ Carrier mass flow ▪ Carrier pipe temperature ▪ Target corrected volume flow ▪ Carrier corrected volume flow ▪ Concentration ▪ Measured values 1 ▪ Measured values 2 ▪ Measured values 3 ▪ Oscillation damping 1 ▪ Oscillation damping 2 ▪ Density ▪ Oil density ▪ Water density ▪ Dynamic viscosity ▪ Sensor electronic temperature (ISEM) ▪ GSV flow ▪ GSV flow alternative ▪ Kinematic viscosity ▪ Mass flow ▪ Oil mass flow ▪ Water mass flow ▪ Index inhomogeneous medium ▪ Index suspended bubbles ▪ HBSI ▪ NSV flow ▪ NSV flow alternative ▪ External pressure ▪ Exciter current 1 ▪ Exciter current 2 ▪ Oscillation frequency 1 ▪ Oscillation frequency 2 ▪ S&W volume flow ▪ Reference density ▪ Reference density alternative ▪ Corrected volume flow ▪ Oil corrected volume flow ▪ Water corrected volume flow ▪ Oscillation damping fluctuation 1 ▪ Oscillation damping fluctuation 2 ▪ Frequency fluctuation 1 ▪ Frequency fluctuation 2 ▪ Target mass flow ▪ Carrier volume flow ▪ Target volume flow ▪ Temp. compensated dynamic viscosity ▪ Temp. compensated kinematic viscosity ▪ Temperature ▪ Status ▪ Volume flow ▪ Oil volume flow ▪ Water volume flow ▪ Water cut	

12.7.3 Diagnostic of configuration

Diagnostic information		Remedy instructions
No.	**Short text**	
330	Flash file invalid	1. Update firmware of device 2. Restart device
	Measured variable status	
	Quality: Bad	
	Quality substatus: Maintenance alarm	
	Coding (hex): 0x24 to 0x27	
	Status signal: M	
	Diagnostic behavior: Warning	
	Influenced measured variables	
	▪ Oscillation amplitude 1 ▪ Oscillation amplitude 2 ▪ Application specific output ▪ Application specific output ▪ Signal asymmetry ▪ Carrier mass flow ▪ Carrier pipe temperature ▪ Concentration ▪ Measured values 1 ▪ Measured values 2 ▪ Measured values 3 ▪ Oscillation damping 1 ▪ Oscillation damping 2 ▪ Density ▪ Dynamic viscosity ▪ Sensor electronic temperature (ISEM) ▪ Kinematic viscosity ▪ Mass flow ▪ Index inhomogeneous medium ▪ Index suspended bubbles ▪ HBSI ▪ External pressure ▪ Exciter current 1 ▪ Exciter current 2 ▪ Oscillation frequency 1 ▪ Oscillation frequency 2 ▪ Reference density ▪ Corrected volume flow ▪ Oscillation damping fluctuation 1 ▪ Oscillation damping fluctuation 2 ▪ Frequency fluctuation 1 ▪ Frequency fluctuation 2 ▪ Target mass flow ▪ Temp. compensated dynamic viscosity ▪ Temp. compensated kinematic viscosity ▪ Temperature ▪ Status ▪ Volume flow	

Diagnostic information			Remedy instructions
No.	**Short text**		
331	Firmware update failed		1. Update firmware of device 2. Restart device
	Measured variable status		
	Quality	Bad	
	Quality substatus	Maintenance alarm	
	Coding (hex)	0x24 to 0x27	
	Status signal	F	
	Diagnostic behavior	Warning	
	Influenced measured variables		
	▪ Oscillation amplitude 1 ▪ Oscillation amplitude 2 ▪ Application specific output ▪ Application specific output ▪ Signal asymmetry ▪ Carrier mass flow ▪ Carrier pipe temperature ▪ Target corrected volume flow ▪ Carrier corrected volume flow ▪ Concentration ▪ Measured values 1 ▪ Measured values 2 ▪ Measured values 3 ▪ Oscillation damping 1 ▪ Oscillation damping 2 ▪ Density ▪ Oil density ▪ Water density ▪ Dynamic viscosity	▪ Sensor electronic temperature (ISEM) ▪ GSV flow ▪ GSV flow alternative ▪ Kinematic viscosity ▪ Mass flow ▪ Oil mass flow ▪ Water mass flow ▪ Index inhomogeneous medium ▪ Index suspended bubbles ▪ HBSI ▪ NSV flow ▪ NSV flow alternative ▪ External pressure ▪ Exciter current 1 ▪ Exciter current 2 ▪ Oscillation frequency 1 ▪ Oscillation frequency 2 ▪ S&W volume flow ▪ Reference density	▪ Reference density alternative ▪ Corrected volume flow ▪ Oil corrected volume flow ▪ Water corrected volume flow ▪ Oscillation damping fluctuation 1 ▪ Oscillation damping fluctuation 2 ▪ Frequency fluctuation 1 ▪ Frequency fluctuation 2 ▪ Target mass flow ▪ Carrier volume flow ▪ Target volume flow ▪ Temp. compensated dynamic viscosity ▪ Temp. compensated kinematic viscosity ▪ Temperature ▪ Status ▪ Volume flow ▪ Oil volume flow ▪ Water volume flow ▪ Water cut

Diagnostic information			Remedy instructions
No.	**Short text**		
410	Data transfer		1. Check connection 2. Retry data transfer
	Measured variable status		
	Quality	Bad	
	Quality substatus	Maintenance alarm	
	Coding (hex)	0x24 to 0x27	
	Status signal	F	
	Diagnostic behavior	Alarm	
	Influenced measured variables		
	▪ Oscillation amplitude 1 ▪ Oscillation amplitude 2 ▪ Application specific output ▪ Application specific output ▪ Signal asymmetry ▪ Carrier mass flow ▪ Carrier pipe temperature ▪ Target corrected volume flow ▪ Carrier corrected volume flow ▪ Concentration ▪ Measured values 1 ▪ Measured values 2 ▪ Measured values 3 ▪ Oscillation damping 1 ▪ Oscillation damping 2 ▪ Density ▪ Oil density ▪ Water density ▪ Dynamic viscosity	▪ Sensor electronic temperature (ISEM) ▪ GSV flow ▪ GSV flow alternative ▪ Kinematic viscosity ▪ Mass flow ▪ Oil mass flow ▪ Water mass flow ▪ Index inhomogeneous medium ▪ Index suspended bubbles ▪ HBSI ▪ NSV flow ▪ NSV flow alternative ▪ External pressure ▪ Exciter current 1 ▪ Exciter current 2 ▪ Oscillation frequency 1 ▪ Oscillation frequency 2 ▪ S&W volume flow ▪ Reference density	▪ Reference density alternative ▪ Corrected volume flow ▪ Oil corrected volume flow ▪ Water corrected volume flow ▪ Oscillation damping fluctuation 1 ▪ Oscillation damping fluctuation 2 ▪ Frequency fluctuation 1 ▪ Frequency fluctuation 2 ▪ Target mass flow ▪ Carrier volume flow ▪ Target volume flow ▪ Temp. compensated dynamic viscosity ▪ Temp. compensated kinematic viscosity ▪ Temperature ▪ Status ▪ Volume flow ▪ Oil volume flow ▪ Water volume flow ▪ Water cut

Diagnostic information			Remedy instructions
No.	**Short text**		
412	Processing download		Download active, please wait
	Measured variable status		
	Quality	Uncertain	
	Quality substatus	Initial value	
	Coding (hex)	0x4C to 0x4F	
	Status signal	C	
	Diagnostic behavior	Warning	
	Influenced measured variables		
	▪ Oscillation amplitude 1 ▪ Oscillation amplitude 2 ▪ Application specific output ▪ Application specific output ▪ Signal asymmetry ▪ Carrier mass flow ▪ Carrier pipe temperature ▪ Target corrected volume flow ▪ Carrier corrected volume flow ▪ Concentration ▪ Measured values 1 ▪ Measured values 2 ▪ Measured values 3 ▪ Oscillation damping 1 ▪ Oscillation damping 2 ▪ Density ▪ Oil density ▪ Water density ▪ Dynamic viscosity	▪ Sensor electronic temperature (ISEM) ▪ GSV flow ▪ GSV flow alternative ▪ Kinematic viscosity ▪ Mass flow ▪ Oil mass flow ▪ Water mass flow ▪ Index inhomogeneous medium ▪ Index suspended bubbles ▪ HBSI ▪ NSV flow ▪ NSV flow alternative ▪ External pressure ▪ Exciter current 1 ▪ Exciter current 2 ▪ Oscillation frequency 1 ▪ Oscillation frequency 2 ▪ S&W volume flow ▪ Reference density	▪ Reference density alternative ▪ Corrected volume flow ▪ Oil corrected volume flow ▪ Water corrected volume flow ▪ Oscillation damping fluctuation 1 ▪ Oscillation damping fluctuation 2 ▪ Frequency fluctuation 1 ▪ Frequency fluctuation 2 ▪ Target mass flow ▪ Carrier volume flow ▪ Target volume flow ▪ Temp. compensated dynamic viscosity ▪ Temp. compensated kinematic viscosity ▪ Temperature ▪ Status ▪ Volume flow ▪ Oil volume flow ▪ Water volume flow ▪ Water cut

Diagnostic information			Remedy instructions
No.	**Short text**		
431	Trim 1 to n		Carry out trim
	Measured variable status		
	Quality	Good	
	Quality substatus	Ok	
	Coding (hex)	0x80 to 0x83	
	Status signal	C	
	Diagnostic behavior	Warning	
	Influenced measured variables		
	–		

Diagnostic information			Remedy instructions
No.	**Short text**		
437	Configuration incompatible		1. Restart device 2. Contact service
	Measured variable status		
	Quality	Bad	
	Quality substatus	Maintenance alarm	
	Coding (hex)	0x24 to 0x27	
	Status signal	F	
	Diagnostic behavior	Alarm	
	Influenced measured variables		
	▪ Oscillation amplitude 1 ▪ Oscillation amplitude 2 ▪ Application specific output ▪ Application specific output ▪ Signal asymmetry ▪ Carrier mass flow ▪ Carrier pipe temperature ▪ Target corrected volume flow ▪ Carrier corrected volume flow ▪ Concentration ▪ Measured values 1 ▪ Measured values 2 ▪ Measured values 3 ▪ Oscillation damping 1 ▪ Oscillation damping 2 ▪ Density ▪ Oil density ▪ Water density ▪ Dynamic viscosity	▪ Sensor electronic temperature (ISEM) ▪ GSV flow ▪ GSV flow alternative ▪ Kinematic viscosity ▪ Mass flow ▪ Oil mass flow ▪ Water mass flow ▪ Index inhomogeneous medium ▪ Index suspended bubbles ▪ HBSI ▪ NSV flow ▪ NSV flow alternative ▪ External pressure ▪ Exciter current 1 ▪ Exciter current 2 ▪ Oscillation frequency 1 ▪ Oscillation frequency 2 ▪ S&W volume flow ▪ Reference density	▪ Reference density alternative ▪ Corrected volume flow ▪ Oil corrected volume flow ▪ Water corrected volume flow ▪ Oscillation damping fluctuation 1 ▪ Oscillation damping fluctuation 2 ▪ Frequency fluctuation 1 ▪ Frequency fluctuation 2 ▪ Target mass flow ▪ Carrier volume flow ▪ Target volume flow ▪ Temp. compensated dynamic viscosity ▪ Temp. compensated kinematic viscosity ▪ Temperature ▪ Status ▪ Volume flow ▪ Oil volume flow ▪ Water volume flow ▪ Water cut

Diagnostic information			Remedy instructions
No.	**Short text**		
438	Dataset		1. Check data set file 2. Check device configuration 3. Up- and download new configuration
	Measured variable status		
	Quality	Uncertain	
	Quality substatus	Maintenance demanded	
	Coding (hex)	0x68 to 0x6B	
	Status signal	M	
	Diagnostic behavior	Warning	
	Influenced measured variables		
	▪ Oscillation amplitude 1 ▪ Oscillation amplitude 2 ▪ Application specific output ▪ Application specific output ▪ Signal asymmetry ▪ Carrier mass flow ▪ Carrier pipe temperature ▪ Target corrected volume flow ▪ Carrier corrected volume flow ▪ Concentration ▪ Measured values 1 ▪ Measured values 2 ▪ Measured values 3 ▪ Oscillation damping 1 ▪ Oscillation damping 2 ▪ Density ▪ Oil density ▪ Water density ▪ Dynamic viscosity	▪ Sensor electronic temperature (ISEM) ▪ GSV flow ▪ GSV flow alternative ▪ Kinematic viscosity ▪ Mass flow ▪ Oil mass flow ▪ Water mass flow ▪ Index inhomogeneous medium ▪ Index suspended bubbles ▪ HBSI ▪ NSV flow ▪ NSV flow alternative ▪ External pressure ▪ Exciter current 1 ▪ Exciter current 2 ▪ Oscillation frequency 1 ▪ Oscillation frequency 2 ▪ S&W volume flow ▪ Reference density	▪ Reference density alternative ▪ Corrected volume flow ▪ Oil corrected volume flow ▪ Water corrected volume flow ▪ Oscillation damping fluctuation 1 ▪ Oscillation damping fluctuation 2 ▪ Frequency fluctuation 1 ▪ Frequency fluctuation 2 ▪ Target mass flow ▪ Carrier volume flow ▪ Target volume flow ▪ Temp. compensated dynamic viscosity ▪ Temp. compensated kinematic viscosity ▪ Temperature ▪ Status ▪ Volume flow ▪ Oil volume flow ▪ Water volume flow ▪ Water cut

Diagnostic information			Remedy instructions
No.	**Short text**		
441	Current output 1 to n		1. Check process 2. Check current output settings
	Measured variable status [from the factory] [1]		
	Quality	Good	
	Quality substatus	Ok	
	Coding (hex)	0x80 to 0x83	
	Status signal	S	
	Diagnostic behavior	Warning	
	Influenced measured variables		
	–		

1) Diagnostic behavior can be changed. This causes the overall status of the measured variable to change.

Diagnostic information			Remedy instructions
No.	**Short text**		
442	Frequency output 1 to n		1. Check process 2. Check frequency output settings
	Measured variable status [from the factory] 1)		
	Quality	Good	
	Quality substatus	Ok	
	Coding (hex)	0x80 to 0x83	
	Status signal	S	
	Diagnostic behavior	Warning	
	Influenced measured variables		
	–		

1) Diagnostic behavior can be changed. This causes the overall status of the measured variable to change.

Diagnostic information			Remedy instructions
No.	**Short text**		
443	Pulse output 1 to n		1. Check process 2. Check pulse output settings
	Measured variable status [from the factory] 1)		
	Quality	Good	
	Quality substatus	Ok	
	Coding (hex)	0x80 to 0x83	
	Status signal	S	
	Diagnostic behavior	Warning	
	Influenced measured variables		
	–		

1) Diagnostic behavior can be changed. This causes the overall status of the measured variable to change.

Diagnostic information			Remedy instructions
No.	**Short text**		
444	Current input 1 to n		1. Check process 2. Check current input settings
	Measured variable status [from the factory] 1)		
	Quality	Good	
	Quality substatus	Ok	
	Coding (hex)	0x80 to 0x83	
	Status signal	S	
	Diagnostic behavior	Warning	
	Influenced measured variables		
	▪ Measured values 1 ▪ Measured values 2 ▪ Measured values 3		

1) Diagnostic behavior can be changed. This causes the overall status of the measured variable to change.

Diagnostic information			Remedy instructions
No.	**Short text**		
453	Flow override		Deactivate flow override
	Measured variable status		
	Quality	Good	
	Quality substatus	Function check	
	Coding (hex)	0xBC to 0xBF	
	Status signal	C	
	Diagnostic behavior	Warning	
	Influenced measured variables		
	▪ Oscillation amplitude 1 ▪ Oscillation amplitude 2 ▪ Application specific output ▪ Application specific output ▪ Signal asymmetry ▪ Carrier mass flow ▪ Carrier pipe temperature ▪ Target corrected volume flow ▪ Carrier corrected volume flow ▪ Concentration ▪ Oscillation damping 1 ▪ Oscillation damping 2 ▪ Density ▪ Oil density ▪ Water density ▪ Dynamic viscosity ▪ Sensor electronic temperature (ISEM) ▪ GSV flow	▪ GSV flow alternative ▪ Kinematic viscosity ▪ Mass flow ▪ Oil mass flow ▪ Water mass flow ▪ Index inhomogeneous medium ▪ Index suspended bubbles ▪ HBSI ▪ NSV flow ▪ NSV flow alternative ▪ External pressure ▪ Exciter current 1 ▪ Exciter current 2 ▪ Oscillation frequency 1 ▪ Oscillation frequency 2 ▪ S&W volume flow ▪ Reference density ▪ Reference density alternative	▪ Corrected volume flow ▪ Oil corrected volume flow ▪ Water corrected volume flow ▪ Oscillation damping fluctuation 1 ▪ Oscillation damping fluctuation 2 ▪ Frequency fluctuation 1 ▪ Frequency fluctuation 2 ▪ Target mass flow ▪ Carrier volume flow ▪ Target volume flow ▪ Temp. compensated dynamic viscosity ▪ Temp. compensated kinematic viscosity ▪ Temperature ▪ Status ▪ Volume flow ▪ Oil volume flow ▪ Water volume flow ▪ Water cut

Diagnostic information			Remedy instructions
No.	**Short text**		
484	Failure mode simulation		Deactivate simulation
	Measured variable status		
	Quality	Bad	
	Quality substatus	Function check	
	Coding (hex)	0x3C to 0x3F	
	Status signal	C	
	Diagnostic behavior	Alarm	
	Influenced measured variables		
	▪ Oscillation amplitude 1 ▪ Oscillation amplitude 2 ▪ Application specific output ▪ Application specific output ▪ Signal asymmetry ▪ Carrier mass flow ▪ Carrier pipe temperature ▪ Target corrected volume flow ▪ Carrier corrected volume flow ▪ Concentration ▪ Oscillation damping 1 ▪ Oscillation damping 2 ▪ Density ▪ Oil density ▪ Water density ▪ Dynamic viscosity ▪ Sensor electronic temperature (ISEM) ▪ GSV flow	▪ GSV flow alternative ▪ Kinematic viscosity ▪ Mass flow ▪ Oil mass flow ▪ Water mass flow ▪ Index inhomogeneous medium ▪ Index suspended bubbles ▪ HBSI ▪ NSV flow ▪ NSV flow alternative ▪ External pressure ▪ Exciter current 1 ▪ Exciter current 2 ▪ Oscillation frequency 1 ▪ Oscillation frequency 2 ▪ S&W volume flow ▪ Reference density ▪ Reference density alternative	▪ Corrected volume flow ▪ Oil corrected volume flow ▪ Water corrected volume flow ▪ Oscillation damping fluctuation 1 ▪ Oscillation damping fluctuation 2 ▪ Frequency fluctuation 1 ▪ Frequency fluctuation 2 ▪ Target mass flow ▪ Carrier volume flow ▪ Target volume flow ▪ Temp. compensated dynamic viscosity ▪ Temp. compensated kinematic viscosity ▪ Temperature ▪ Status ▪ Volume flow ▪ Oil volume flow ▪ Water volume flow ▪ Water cut

Diagnostic information			Remedy instructions
No.	**Short text**		
485	Measured variable simulation		Deactivate simulation
	Measured variable status		
	Quality	Good	
	Quality substatus	Function check	
	Coding (hex)	0xBC to 0xBF	
	Status signal	C	
	Diagnostic behavior	Warning	
	Influenced measured variables		
	▪ Oscillation amplitude 1 ▪ Oscillation amplitude 2 ▪ Application specific output ▪ Application specific output ▪ Signal asymmetry ▪ Carrier mass flow ▪ Carrier pipe temperature ▪ Target corrected volume flow ▪ Carrier corrected volume flow ▪ Concentration ▪ Oscillation damping 1 ▪ Oscillation damping 2 ▪ Density ▪ Oil density ▪ Water density ▪ Dynamic viscosity ▪ Sensor electronic temperature (ISEM) ▪ GSV flow	▪ GSV flow alternative ▪ Kinematic viscosity ▪ Mass flow ▪ Oil mass flow ▪ Water mass flow ▪ Index inhomogeneous medium ▪ Index suspended bubbles ▪ HBSI ▪ NSV flow ▪ NSV flow alternative ▪ External pressure ▪ Exciter current 1 ▪ Exciter current 2 ▪ Oscillation frequency 1 ▪ Oscillation frequency 2 ▪ S&W volume flow ▪ Reference density ▪ Reference density alternative	▪ Corrected volume flow ▪ Oil corrected volume flow ▪ Water corrected volume flow ▪ Oscillation damping fluctuation 1 ▪ Oscillation damping fluctuation 2 ▪ Frequency fluctuation 1 ▪ Frequency fluctuation 2 ▪ Target mass flow ▪ Carrier volume flow ▪ Target volume flow ▪ Temp. compensated dynamic viscosity ▪ Temp. compensated kinematic viscosity ▪ Temperature ▪ Status ▪ Volume flow ▪ Oil volume flow ▪ Water volume flow ▪ Water cut

Diagnostic information			Remedy instructions
No.	**Short text**		
486	Current input 1 to n simulation		Deactivate simulation
	Measured variable status		
	Quality	Good	
	Quality substatus	Function check	
	Coding (hex)	0xBC to 0xBF	
	Status signal	C	
	Diagnostic behavior	Warning	
	Influenced measured variables		
	▪ Measured values 1 ▪ Measured values 2 ▪ Measured values 3		

Diagnostic information			Remedy instructions
No.	Short text		
491	Current output 1 to n simulation		Deactivate simulation
	Measured variable status		
	Quality	Good	
	Quality substatus	Ok	
	Coding (hex)	0x80 to 0x83	
	Status signal	C	
	Diagnostic behavior	Warning	
	Influenced measured variables		
	–		

Diagnostic information			Remedy instructions
No.	Short text		
492	Simulation frequency output 1 to n		Deactivate simulation frequency output
	Measured variable status		
	Quality	Good	
	Quality substatus	Ok	
	Coding (hex)	0x80 to 0x83	
	Status signal	C	
	Diagnostic behavior	Warning	
	Influenced measured variables		
	–		

Diagnostic information			Remedy instructions
No.	Short text		
493	Simulation pulse output 1 to n		Deactivate simulation pulse output
	Measured variable status		
	Quality	Good	
	Quality substatus	Ok	
	Coding (hex)	0x80 to 0x83	
	Status signal	C	
	Diagnostic behavior	Warning	
	Influenced measured variables		
	–		

Diagnostic information			Remedy instructions
No.	Short text		
494	Switch output simulation 1 to n		Deactivate simulation switch output
	Measured variable status		
	Quality	Good	
	Quality substatus	Ok	
	Coding (hex)	0x80 to 0x83	
	Status signal	C	
	Diagnostic behavior	Warning	
	Influenced measured variables		
	–		

Diagnostic information			Remedy instructions
No.	Short text		
495	Diagnostic event simulation		Deactivate simulation
	Measured variable status		
	Quality	Good	
	Quality substatus	Ok	
	Coding (hex)	0x80 to 0x83	
	Status signal	C	
	Diagnostic behavior	Warning	
	Influenced measured variables		
	–		

Diagnostic information			Remedy instructions
No.	Short text		
496	Status input simulation		Deactivate simulation status input
	Measured variable status		
	Quality	Good	
	Quality substatus	Ok	
	Coding (hex)	0x80 to 0x83	
	Status signal	C	
	Diagnostic behavior	Warning	
	Influenced measured variables		
	–		

Diagnostic information			Remedy instructions
No.	**Short text**		
520	I/O 1 to n hardware configuration invalid		1. Check I/O hardware configuration 2. Replace wrong I/O module 3. Plug the module of double pulse output on correct slot
	Measured variable status		
	Quality	Good	
	Quality substatus	Ok	
	Coding (hex)	0x80 to 0x83	
	Status signal	F	
	Diagnostic behavior	Alarm	
	Influenced measured variables		
	–		

Diagnostic information			Remedy instructions
No.	**Short text**		
528	Concentration calculation not possible		Out of valid range of the selected calculation algorithm 1. Check concentration settings 2. Check measured values, e.g. density or temperature
	Measured variable status		
	Quality	Bad	
	Quality substatus	Function check	
	Coding (hex)	0x3C to 0x3F	
	Status signal	S	
	Diagnostic behavior	Alarm	
	Influenced measured variables		
	▪ Carrier mass flow ▪ Target corrected volume flow ▪ Carrier corrected volume flow ▪ Concentration	▪ Density ▪ Mass flow ▪ Target mass flow ▪ Carrier volume flow	▪ Target volume flow ▪ Volume flow

Diagnostic information			Remedy instructions
No.	**Short text**		
529	Concentration calculation not accurate		Out of valid range of the selected calculation algorithm 1. Check concentration settings 2. Check measured values, e.g. density or temperature
	Measured variable status		
	Quality	Bad	
	Quality substatus	Function check	
	Coding (hex)	0x3C to 0x3F	
	Status signal	S	
	Diagnostic behavior	Warning	
	Influenced measured variables		
	▪ Carrier mass flow ▪ Target corrected volume flow ▪ Carrier corrected volume flow ▪ Concentration	▪ Density ▪ Mass flow ▪ Target mass flow ▪ Carrier volume flow	▪ Target volume flow ▪ Volume flow

Diagnostic information			Remedy instructions
No.	Short text		
537	Configuration		1. Check IP addresses in network 2. Change IP address
	Measured variable status		
	Quality	Good	
	Quality substatus	Ok	
	Coding (hex)	0x80 to 0x83	
	Status signal	F	
	Diagnostic behavior	Warning	
	Influenced measured variables		
	–		

Diagnostic information			Remedy instructions
No.	Short text		
594	Relay output simulation		Deactivate simulation switch output
	Measured variable status		
	Quality	Good	
	Quality substatus	Ok	
	Coding (hex)	0x80 to 0x83	
	Status signal	C	
	Diagnostic behavior	Warning	
	Influenced measured variables		
	–		

12.7.4 Diagnostic of process

Diagnostic information			Remedy instructions
No.	Short text		
803	Current loop		1. Check wiring 2. Change I/O module
	Measured variable status		
	Quality	Good	
	Quality substatus	Ok	
	Coding (hex)	0x80 to 0x83	
	Status signal	F	
	Diagnostic behavior	Alarm	
	Influenced measured variables		
	–		

Diagnostic information			Remedy instructions
No.	**Short text**		
830	Sensor temperature too high		Reduce ambient temp. around the sensor housing
	Measured variable status [from the factory] [1]		
	Quality	Good	
	Quality substatus	Ok	
	Coding (hex)	0x80 to 0x83	
	Status signal	S	
	Diagnostic behavior	Warning	
	Influenced measured variables		
	▪ Oscillation amplitude 1 ▪ Oscillation amplitude 2 ▪ Application specific output ▪ Application specific output ▪ Signal asymmetry ▪ Carrier mass flow ▪ Carrier pipe temperature ▪ Target corrected volume flow ▪ Carrier corrected volume flow ▪ Concentration ▪ Oscillation damping 1 ▪ Oscillation damping 2 ▪ Density ▪ Oil density ▪ Water density ▪ Dynamic viscosity ▪ Sensor electronic temperature (ISEM) ▪ GSV flow	▪ GSV flow alternative ▪ Kinematic viscosity ▪ Mass flow ▪ Oil mass flow ▪ Water mass flow ▪ Index inhomogeneous medium ▪ Index suspended bubbles ▪ HBSI ▪ NSV flow ▪ NSV flow alternative ▪ External pressure ▪ Exciter current 1 ▪ Exciter current 2 ▪ Oscillation frequency 1 ▪ Oscillation frequency 2 ▪ S&W volume flow ▪ Reference density ▪ Reference density alternative	▪ Corrected volume flow ▪ Oil corrected volume flow ▪ Water corrected volume flow ▪ Oscillation damping fluctuation 1 ▪ Oscillation damping fluctuation 2 ▪ Frequency fluctuation 1 ▪ Frequency fluctuation 2 ▪ Target mass flow ▪ Carrier volume flow ▪ Target volume flow ▪ Temp. compensated dynamic viscosity ▪ Temp. compensated kinematic viscosity ▪ Temperature ▪ Status ▪ Volume flow ▪ Oil volume flow ▪ Water volume flow ▪ Water cut

1) Diagnostic behavior can be changed. This causes the overall status of the measured variable to change.

Diagnostic information			Remedy instructions
No.	**Short text**		
831	Sensor temperature too low		Increase ambient temp. around the sensor housing
	Measured variable status [from the factory] [1]		
	Quality	Good	
	Quality substatus	Ok	
	Coding (hex)	0x80 to 0x83	
	Status signal	S	
	Diagnostic behavior	Warning	
	Influenced measured variables		
	▪ Oscillation amplitude 1 ▪ Oscillation amplitude 2 ▪ Application specific output ▪ Application specific output ▪ Signal asymmetry ▪ Carrier mass flow ▪ Carrier pipe temperature ▪ Target corrected volume flow ▪ Carrier corrected volume flow ▪ Concentration ▪ Oscillation damping 1 ▪ Oscillation damping 2 ▪ Density ▪ Oil density ▪ Water density ▪ Dynamic viscosity ▪ Sensor electronic temperature (ISEM) ▪ GSV flow	▪ GSV flow alternative ▪ Kinematic viscosity ▪ Mass flow ▪ Oil mass flow ▪ Water mass flow ▪ Index inhomogeneous medium ▪ Index suspended bubbles ▪ HBSI ▪ NSV flow ▪ NSV flow alternative ▪ External pressure ▪ Exciter current 1 ▪ Exciter current 2 ▪ Oscillation frequency 1 ▪ Oscillation frequency 2 ▪ S&W volume flow ▪ Reference density ▪ Reference density alternative	▪ Corrected volume flow ▪ Oil corrected volume flow ▪ Water corrected volume flow ▪ Oscillation damping fluctuation 1 ▪ Oscillation damping fluctuation 2 ▪ Frequency fluctuation 1 ▪ Frequency fluctuation 2 ▪ Target mass flow ▪ Carrier volume flow ▪ Target volume flow ▪ Temp. compensated dynamic viscosity ▪ Temp. compensated kinematic viscosity ▪ Temperature ▪ Status ▪ Volume flow ▪ Oil volume flow ▪ Water volume flow ▪ Water cut

1) Diagnostic behavior can be changed. This causes the overall status of the measured variable to change.

Diagnostic information			Remedy instructions
No.	**Short text**		
832	Electronic temperature too high		Reduce ambient temperature
	Measured variable status [from the factory] [1]		
	Quality	Good	
	Quality substatus	Ok	
	Coding (hex)	0x80 to 0x83	
	Status signal	S	
	Diagnostic behavior	Warning	
	Influenced measured variables		
	▪ Oscillation amplitude 1 ▪ Oscillation amplitude 2 ▪ Application specific output ▪ Application specific output ▪ Signal asymmetry ▪ Carrier mass flow ▪ Carrier pipe temperature ▪ Target corrected volume flow ▪ Carrier corrected volume flow ▪ Concentration ▪ Measured values 1 ▪ Measured values 2 ▪ Measured values 3 ▪ Oscillation damping 1 ▪ Oscillation damping 2 ▪ Density ▪ Oil density ▪ Water density ▪ Dynamic viscosity	▪ Sensor electronic temperature (ISEM) ▪ GSV flow ▪ GSV flow alternative ▪ Kinematic viscosity ▪ Mass flow ▪ Oil mass flow ▪ Water mass flow ▪ Index inhomogeneous medium ▪ Index suspended bubbles ▪ HBSI ▪ NSV flow ▪ NSV flow alternative ▪ External pressure ▪ Exciter current 1 ▪ Exciter current 2 ▪ Oscillation frequency 1 ▪ Oscillation frequency 2 ▪ S&W volume flow ▪ Reference density	▪ Reference density alternative ▪ Corrected volume flow ▪ Oil corrected volume flow ▪ Water corrected volume flow ▪ Oscillation damping fluctuation 1 ▪ Oscillation damping fluctuation 2 ▪ Frequency fluctuation 1 ▪ Frequency fluctuation 2 ▪ Target mass flow ▪ Carrier volume flow ▪ Target volume flow ▪ Temp. compensated dynamic viscosity ▪ Temp. compensated kinematic viscosity ▪ Temperature ▪ Status ▪ Volume flow ▪ Oil volume flow ▪ Water volume flow ▪ Water cut

1) Diagnostic behavior can be changed. This causes the overall status of the measured variable to change.

Diagnostic information			Remedy instructions
No.	**Short text**		
833	Electronic temperature too low		Increase ambient temperature
	Measured variable status [from the factory] [1]		
	Quality	Good	
	Quality substatus	Ok	
	Coding (hex)	0x80 to 0x83	
	Status signal	S	
	Diagnostic behavior	Warning	
	Influenced measured variables		
	▪ Oscillation amplitude 1 ▪ Oscillation amplitude 2 ▪ Application specific output ▪ Application specific output ▪ Signal asymmetry ▪ Carrier mass flow ▪ Carrier pipe temperature ▪ Target corrected volume flow ▪ Carrier corrected volume flow ▪ Concentration ▪ Measured values 1 ▪ Measured values 2 ▪ Measured values 3 ▪ Oscillation damping 1 ▪ Oscillation damping 2 ▪ Density ▪ Oil density ▪ Water density ▪ Dynamic viscosity	▪ Sensor electronic temperature (ISEM) ▪ GSV flow ▪ GSV flow alternative ▪ Kinematic viscosity ▪ Mass flow ▪ Oil mass flow ▪ Water mass flow ▪ Index inhomogeneous medium ▪ Index suspended bubbles ▪ HBSI ▪ NSV flow ▪ NSV flow alternative ▪ External pressure ▪ Exciter current 1 ▪ Exciter current 2 ▪ Oscillation frequency 1 ▪ Oscillation frequency 2 ▪ S&W volume flow ▪ Reference density	▪ Reference density alternative ▪ Corrected volume flow ▪ Oil corrected volume flow ▪ Water corrected volume flow ▪ Oscillation damping fluctuation 1 ▪ Oscillation damping fluctuation 2 ▪ Frequency fluctuation 1 ▪ Frequency fluctuation 2 ▪ Target mass flow ▪ Carrier volume flow ▪ Target volume flow ▪ Temp. compensated dynamic viscosity ▪ Temp. compensated kinematic viscosity ▪ Temperature ▪ Status ▪ Volume flow ▪ Oil volume flow ▪ Water volume flow ▪ Water cut

1) Diagnostic behavior can be changed. This causes the overall status of the measured variable to change.

Diagnostic information			Remedy instructions
No.	**Short text**		
834	Process temperature too high		Reduce process temperature
	Measured variable status [from the factory] [1]		
	Quality	Good	
	Quality substatus	Ok	
	Coding (hex)	0x80 to 0x83	
	Status signal	S	
	Diagnostic behavior	Warning	
	Influenced measured variables		
	▪ Oscillation amplitude 1 ▪ Oscillation amplitude 2 ▪ Application specific output ▪ Application specific output ▪ Signal asymmetry ▪ Carrier mass flow ▪ Carrier pipe temperature ▪ Target corrected volume flow ▪ Carrier corrected volume flow ▪ Concentration ▪ Oscillation damping 1 ▪ Oscillation damping 2 ▪ Density ▪ Oil density ▪ Water density ▪ Dynamic viscosity ▪ Sensor electronic temperature (ISEM) ▪ GSV flow	▪ GSV flow alternative ▪ Kinematic viscosity ▪ Mass flow ▪ Oil mass flow ▪ Water mass flow ▪ Index inhomogeneous medium ▪ Index suspended bubbles ▪ HBSI ▪ NSV flow ▪ NSV flow alternative ▪ External pressure ▪ Exciter current 1 ▪ Exciter current 2 ▪ Oscillation frequency 1 ▪ Oscillation frequency 2 ▪ S&W volume flow ▪ Reference density ▪ Reference density alternative	▪ Corrected volume flow ▪ Oil corrected volume flow ▪ Water corrected volume flow ▪ Oscillation damping fluctuation 1 ▪ Oscillation damping fluctuation 2 ▪ Frequency fluctuation 1 ▪ Frequency fluctuation 2 ▪ Target mass flow ▪ Carrier volume flow ▪ Target volume flow ▪ Temp. compensated dynamic viscosity ▪ Temp. compensated kinematic viscosity ▪ Temperature ▪ Status ▪ Volume flow ▪ Oil volume flow ▪ Water volume flow ▪ Water cut

1) Diagnostic behavior can be changed. This causes the overall status of the measured variable to change.

Diagnostic information			Remedy instructions
No.	**Short text**		
835	Process temperature too low		Increase process temperature
	Measured variable status [from the factory] [1]		
	Quality	Good	
	Quality substatus	Ok	
	Coding (hex)	0x80 to 0x83	
	Status signal	S	
	Diagnostic behavior	Warning	
	Influenced measured variables		
	▪ Oscillation amplitude 1 ▪ Oscillation amplitude 2 ▪ Application specific output ▪ Application specific output ▪ Signal asymmetry ▪ Carrier mass flow ▪ Carrier pipe temperature ▪ Target corrected volume flow ▪ Carrier corrected volume flow ▪ Concentration ▪ Oscillation damping 1 ▪ Oscillation damping 2 ▪ Density ▪ Oil density ▪ Water density ▪ Dynamic viscosity ▪ Sensor electronic temperature (ISEM) ▪ GSV flow	▪ GSV flow alternative ▪ Kinematic viscosity ▪ Mass flow ▪ Oil mass flow ▪ Water mass flow ▪ Index inhomogeneous medium ▪ Index suspended bubbles ▪ HBSI ▪ NSV flow ▪ NSV flow alternative ▪ External pressure ▪ Exciter current 1 ▪ Exciter current 2 ▪ Oscillation frequency 1 ▪ Oscillation frequency 2 ▪ S&W volume flow ▪ Reference density ▪ Reference density alternative	▪ Corrected volume flow ▪ Oil corrected volume flow ▪ Water corrected volume flow ▪ Oscillation damping fluctuation 1 ▪ Oscillation damping fluctuation 2 ▪ Frequency fluctuation 1 ▪ Frequency fluctuation 2 ▪ Target mass flow ▪ Carrier volume flow ▪ Target volume flow ▪ Temp. compensated dynamic viscosity ▪ Temp. compensated kinematic viscosity ▪ Temperature ▪ Status ▪ Volume flow ▪ Oil volume flow ▪ Water volume flow ▪ Water cut

1) Diagnostic behavior can be changed. This causes the overall status of the measured variable to change.

Diagnostic information			Remedy instructions
No.	**Short text**		
842	Process limit		Low flow cut off active! 1. Check low flow cut off configuration
	Measured variable status [from the factory] 1)		
	Quality	Good	
	Quality substatus	Ok	
	Coding (hex)	0x80 to 0x83	
	Status signal	S	
	Diagnostic behavior	Warning	
	Influenced measured variables		
	▪ Oscillation amplitude 1 ▪ Oscillation amplitude 2 ▪ Application specific output ▪ Application specific output ▪ Signal asymmetry ▪ Carrier mass flow ▪ Carrier pipe temperature ▪ Target corrected volume flow ▪ Carrier corrected volume flow ▪ Concentration ▪ Oscillation damping 1 ▪ Oscillation damping 2 ▪ Density ▪ Oil density ▪ Water density ▪ Dynamic viscosity ▪ Sensor electronic temperature (ISEM) ▪ GSV flow	▪ GSV flow alternative ▪ Kinematic viscosity ▪ Mass flow ▪ Oil mass flow ▪ Water mass flow ▪ Index inhomogeneous medium ▪ Index suspended bubbles ▪ HBSI ▪ NSV flow ▪ NSV flow alternative ▪ External pressure ▪ Exciter current 1 ▪ Exciter current 2 ▪ Oscillation frequency 1 ▪ Oscillation frequency 2 ▪ S&W volume flow ▪ Reference density ▪ Reference density alternative	▪ Corrected volume flow ▪ Oil corrected volume flow ▪ Water corrected volume flow ▪ Oscillation damping fluctuation 1 ▪ Oscillation damping fluctuation 2 ▪ Frequency fluctuation 1 ▪ Frequency fluctuation 2 ▪ Target mass flow ▪ Carrier volume flow ▪ Target volume flow ▪ Temp. compensated dynamic viscosity ▪ Temp. compensated kinematic viscosity ▪ Temperature ▪ Status ▪ Volume flow ▪ Oil volume flow ▪ Water volume flow ▪ Water cut

1) Diagnostic behavior can be changed. This causes the overall status of the measured variable to change.

Diagnostic information			Remedy instructions
No.	**Short text**		
862	Partly filled pipe		1. Check for gas in process 2. Adjust detection limits
	Measured variable status [from the factory] 1)		
	Quality	Good	
	Quality substatus	Ok	
	Coding (hex)	0x80 to 0x83	
	Status signal	S	
	Diagnostic behavior	Warning	
	Influenced measured variables		
	▪ Application specific output ▪ Application specific output ▪ Carrier mass flow ▪ Target corrected volume flow ▪ Carrier corrected volume flow ▪ Concentration ▪ Density ▪ Oil density ▪ Water density ▪ Dynamic viscosity ▪ GSV flow ▪ GSV flow alternative ▪ Kinematic viscosity	▪ Mass flow ▪ Oil mass flow ▪ Water mass flow ▪ Index inhomogeneous medium ▪ Index suspended bubbles ▪ HBSI ▪ NSV flow ▪ NSV flow alternative ▪ External pressure ▪ S&W volume flow ▪ Reference density ▪ Reference density alternative ▪ Corrected volume flow	▪ Oil corrected volume flow ▪ Water corrected volume flow ▪ Target mass flow ▪ Carrier volume flow ▪ Target volume flow ▪ Temp. compensated dynamic viscosity ▪ Temp. compensated kinematic viscosity ▪ Temperature ▪ Status ▪ Volume flow ▪ Oil volume flow ▪ Water volume flow ▪ Water cut

1) Diagnostic behavior can be changed. This causes the overall status of the measured variable to change.

Diagnostic information			Remedy instructions
No.	**Short text**		
882	Input signal		1. Check input configuration 2. Check external device or process conditions
	Measured variable status		
	Quality	Bad	
	Quality substatus	Maintenance alarm	
	Coding (hex)	0x24 to 0x27	
	Status signal	F	
	Diagnostic behavior	Alarm	
	Influenced measured variables		
	▪ Oscillation amplitude 1 ▪ Oscillation amplitude 2 ▪ Application specific output ▪ Application specific output ▪ Signal asymmetry ▪ Carrier mass flow ▪ Carrier pipe temperature ▪ Target corrected volume flow ▪ Carrier corrected volume flow ▪ Concentration ▪ Measured values 1 ▪ Measured values 2 ▪ Measured values 3 ▪ Oscillation damping 1 ▪ Oscillation damping 2 ▪ Density ▪ Oil density ▪ Water density ▪ Dynamic viscosity	▪ Sensor electronic temperature (ISEM) ▪ GSV flow ▪ GSV flow alternative ▪ Kinematic viscosity ▪ Mass flow ▪ Oil mass flow ▪ Water mass flow ▪ Index inhomogeneous medium ▪ Index suspended bubbles ▪ HBSI ▪ NSV flow ▪ NSV flow alternative ▪ External pressure ▪ Exciter current 1 ▪ Exciter current 2 ▪ Oscillation frequency 1 ▪ Oscillation frequency 2 ▪ S&W volume flow ▪ Reference density	▪ Reference density alternative ▪ Corrected volume flow ▪ Oil corrected volume flow ▪ Water corrected volume flow ▪ Oscillation damping fluctuation 1 ▪ Oscillation damping fluctuation 2 ▪ Frequency fluctuation 1 ▪ Frequency fluctuation 2 ▪ Target mass flow ▪ Carrier volume flow ▪ Target volume flow ▪ Temp. compensated dynamic viscosity ▪ Temp. compensated kinematic viscosity ▪ Temperature ▪ Status ▪ Volume flow ▪ Oil volume flow ▪ Water volume flow ▪ Water cut

Diagnostic information			Remedy instructions
No.	**Short text**		
910	Tubes not oscillating		1. Check electronic 2. Inspect sensor
	Measured variable status		
	Quality	Bad	
	Quality substatus	Maintenance alarm	
	Coding (hex)	0x24 to 0x27	
	Status signal	F	
	Diagnostic behavior	Alarm	
	Influenced measured variables		
	▪ Oscillation amplitude 1 ▪ Oscillation amplitude 2 ▪ Application specific output ▪ Application specific output ▪ Signal asymmetry ▪ Carrier mass flow ▪ Carrier pipe temperature ▪ Target corrected volume flow ▪ Carrier corrected volume flow ▪ Concentration ▪ Oscillation damping 1 ▪ Oscillation damping 2 ▪ Density ▪ Oil density ▪ Water density ▪ Dynamic viscosity ▪ Sensor electronic temperature (ISEM) ▪ GSV flow	▪ GSV flow alternative ▪ Kinematic viscosity ▪ Mass flow ▪ Oil mass flow ▪ Water mass flow ▪ Index inhomogeneous medium ▪ Index suspended bubbles ▪ HBSI ▪ NSV flow ▪ NSV flow alternative ▪ External pressure ▪ Exciter current 1 ▪ Exciter current 2 ▪ Oscillation frequency 1 ▪ Oscillation frequency 2 ▪ S&W volume flow ▪ Reference density ▪ Reference density alternative	▪ Corrected volume flow ▪ Oil corrected volume flow ▪ Water corrected volume flow ▪ Oscillation damping fluctuation 1 ▪ Oscillation damping fluctuation 2 ▪ Frequency fluctuation 1 ▪ Frequency fluctuation 2 ▪ Target mass flow ▪ Carrier volume flow ▪ Target volume flow ▪ Temp. compensated dynamic viscosity ▪ Temp. compensated kinematic viscosity ▪ Temperature ▪ Status ▪ Volume flow ▪ Oil volume flow ▪ Water volume flow ▪ Water cut

Diagnostic information			Remedy instructions
No.	**Short text**		
912	Medium inhomogeneous		1. Check process cond. 2. Increase system pressure
	Measured variable status [from the factory] [1]		
	Quality	Good	
	Quality substatus	Ok	
	Coding (hex)	0x80 to 0x83	
	Status signal	S	
	Diagnostic behavior	Warning	
	Influenced measured variables		
	▪ Oscillation amplitude 1 ▪ Oscillation amplitude 2 ▪ Application specific output ▪ Application specific output ▪ Signal asymmetry ▪ Carrier mass flow ▪ Carrier pipe temperature ▪ Target corrected volume flow ▪ Carrier corrected volume flow ▪ Concentration ▪ Oscillation damping 1 ▪ Oscillation damping 2 ▪ Density ▪ Oil density ▪ Water density ▪ Dynamic viscosity ▪ Sensor electronic temperature (ISEM) ▪ GSV flow	▪ GSV flow alternative ▪ Kinematic viscosity ▪ Mass flow ▪ Oil mass flow ▪ Water mass flow ▪ Index inhomogeneous medium ▪ Index suspended bubbles ▪ HBSI ▪ NSV flow ▪ NSV flow alternative ▪ External pressure ▪ Exciter current 1 ▪ Exciter current 2 ▪ Oscillation frequency 1 ▪ Oscillation frequency 2 ▪ S&W volume flow ▪ Reference density ▪ Reference density alternative	▪ Corrected volume flow ▪ Oil corrected volume flow ▪ Water corrected volume flow ▪ Oscillation damping fluctuation 1 ▪ Oscillation damping fluctuation 2 ▪ Frequency fluctuation 1 ▪ Frequency fluctuation 2 ▪ Target mass flow ▪ Carrier volume flow ▪ Target volume flow ▪ Temp. compensated dynamic viscosity ▪ Temp. compensated kinematic viscosity ▪ Temperature ▪ Status ▪ Volume flow ▪ Oil volume flow ▪ Water volume flow ▪ Water cut

1) Diagnostic behavior can be changed. This causes the overall status of the measured variable to change.

Diagnostic information			Remedy instructions
No.	**Short text**		
913	Medium unsuitable		1. Check process conditions 2. Check electronic modules or sensor
	Measured variable status [from the factory] [1)]		
	Quality	Good	
	Quality substatus	Ok	
	Coding (hex)	0x80 to 0x83	
	Status signal	S	
	Diagnostic behavior	Warning	
	Influenced measured variables		
	▪ Oscillation amplitude 1 ▪ Oscillation amplitude 2 ▪ Application specific output ▪ Application specific output ▪ Signal asymmetry ▪ Carrier mass flow ▪ Carrier pipe temperature ▪ Target corrected volume flow ▪ Carrier corrected volume flow ▪ Concentration ▪ Oscillation damping 1 ▪ Oscillation damping 2 ▪ Density ▪ Oil density ▪ Water density ▪ Dynamic viscosity ▪ Sensor electronic temperature (ISEM) ▪ GSV flow	▪ GSV flow alternative ▪ Kinematic viscosity ▪ Mass flow ▪ Oil mass flow ▪ Water mass flow ▪ Index inhomogeneous medium ▪ Index suspended bubbles ▪ HBSI ▪ NSV flow ▪ NSV flow alternative ▪ External pressure ▪ Exciter current 1 ▪ Exciter current 2 ▪ Oscillation frequency 1 ▪ Oscillation frequency 2 ▪ S&W volume flow ▪ Reference density ▪ Reference density alternative	▪ Corrected volume flow ▪ Oil corrected volume flow ▪ Water corrected volume flow ▪ Oscillation damping fluctuation 1 ▪ Oscillation damping fluctuation 2 ▪ Frequency fluctuation 1 ▪ Frequency fluctuation 2 ▪ Target mass flow ▪ Carrier volume flow ▪ Target volume flow ▪ Temp. compensated dynamic viscosity ▪ Temp. compensated kinematic viscosity ▪ Temperature ▪ Status ▪ Volume flow ▪ Oil volume flow ▪ Water volume flow ▪ Water cut

1) Diagnostic behavior can be changed. This causes the overall status of the measured variable to change.

Diagnostic information			Remedy instructions
No.	**Short text**		
941	API temperature out of specification		1. Check process temperature with selected API commodity group 2. Check API related parameters
	Measured variable status [from the factory] [1)]		
	Quality	Bad	
	Quality substatus	Maintenance alarm	
	Coding (hex)	0x24 to 0x27	
	Status signal	S	
	Diagnostic behavior	Warning	
	Influenced measured variables		
	▪ Oil density ▪ Water density ▪ GSV flow ▪ GSV flow alternative ▪ Mass flow ▪ Oil mass flow	▪ Water mass flow ▪ NSV flow ▪ NSV flow alternative ▪ External pressure ▪ S&W volume flow ▪ Reference density alternative	▪ Corrected volume flow ▪ Oil corrected volume flow ▪ Water corrected volume flow ▪ Oil volume flow ▪ Water volume flow ▪ Water cut

1) Diagnostic behavior can be changed. This causes the overall status of the measured variable to change.

Diagnostic information			Remedy instructions
No.	**Short text**		
942	API density out of specification		1. Check process density with selected API commodity group 2. Check API related parameters
	Measured variable status [from the factory] [1)]		
	Quality	Bad	
	Quality substatus	Maintenance alarm	
	Coding (hex)	0x24 to 0x27	
	Status signal	S	
	Diagnostic behavior	Warning	
	Influenced measured variables		
	Mass flow		

1) Diagnostic behavior can be changed. This causes the overall status of the measured variable to change.

Diagnostic information			Remedy instructions
No.	**Short text**		
943	API pressure out of specification		1. Check process pressure with selected API commodity group 2. Check API related parameters
	Measured variable status [from the factory] [1)]		
	Quality	Bad	
	Quality substatus	Maintenance alarm	
	Coding (hex)	0x24 to 0x27	
	Status signal	S	
	Diagnostic behavior	Warning	
	Influenced measured variables		
	▪ Oil density ▪ Water density ▪ GSV flow ▪ GSV flow alternative ▪ Mass flow ▪ Oil mass flow	▪ Water mass flow ▪ NSV flow ▪ NSV flow alternative ▪ External pressure ▪ S&W volume flow ▪ Reference density alternative	▪ Corrected volume flow ▪ Oil corrected volume flow ▪ Water corrected volume flow ▪ Oil volume flow ▪ Water volume flow ▪ Water cut

1) Diagnostic behavior can be changed. This causes the overall status of the measured variable to change.

Diagnostic information		Remedy instructions
No.	**Short text**	
944	Monitoring failed	Check process conditions for Heartbeat Monitoring
	Measured variable status [from the factory] [1)]	
	Quality: Good	
	Quality substatus: Ok	
	Coding (hex): 0x80 to 0x83	
	Status signal: S	
	Diagnostic behavior: Warning	
	Influenced measured variables	
	▪ Oscillation amplitude 1 ▪ Oscillation amplitude 2 ▪ Application specific output ▪ Application specific output ▪ Signal asymmetry ▪ Carrier mass flow ▪ Carrier pipe temperature ▪ Concentration ▪ Oscillation damping 1 ▪ Oscillation damping 2 ▪ Density ▪ Dynamic viscosity ▪ Sensor electronic temperature (ISEM) ▪ Kinematic viscosity ▪ Mass flow ▪ Index inhomogeneous medium ▪ Index suspended bubbles ▪ HBSI ▪ External pressure ▪ Exciter current 1 ▪ Exciter current 2 ▪ Oscillation frequency 1 ▪ Oscillation frequency 2 ▪ Reference density ▪ Corrected volume flow ▪ Oscillation damping fluctuation 1 ▪ Oscillation damping fluctuation 2 ▪ Frequency fluctuation 1 ▪ Frequency fluctuation 2 ▪ Target mass flow ▪ Temp. compensated dynamic viscosity ▪ Temp. compensated kinematic viscosity ▪ Temperature ▪ Status ▪ Volume flow	

1) Diagnostic behavior can be changed. This causes the overall status of the measured variable to change.

Diagnostic information		Remedy instructions
No.	**Short text**	
948	Oscillation damping too high	Check process conditions
	Measured variable status [from the factory] [1)]	
	Quality: Good	
	Quality substatus: Ok	
	Coding (hex): 0x80 to 0x83	
	Status signal: S	
	Diagnostic behavior: Warning	
	Influenced measured variables	
	▪ Oscillation amplitude 1 ▪ Oscillation amplitude 2 ▪ Application specific output ▪ Application specific output ▪ Signal asymmetry ▪ Carrier mass flow ▪ Carrier pipe temperature ▪ Target corrected volume flow ▪ Carrier corrected volume flow ▪ Concentration ▪ Oscillation damping 1 ▪ Oscillation damping 2 ▪ Density ▪ Oil density ▪ Water density ▪ Dynamic viscosity ▪ Sensor electronic temperature (ISEM) ▪ GSV flow ▪ GSV flow alternative ▪ Kinematic viscosity ▪ Mass flow ▪ Oil mass flow ▪ Water mass flow ▪ Index inhomogeneous medium ▪ Index suspended bubbles ▪ HBSI ▪ NSV flow ▪ NSV flow alternative ▪ External pressure ▪ Exciter current 1 ▪ Exciter current 2 ▪ Oscillation frequency 1 ▪ Oscillation frequency 2 ▪ S&W volume flow ▪ Reference density ▪ Reference density alternative ▪ Corrected volume flow ▪ Oil corrected volume flow ▪ Water corrected volume flow ▪ Oscillation damping fluctuation 1 ▪ Oscillation damping fluctuation 2 ▪ Frequency fluctuation 1 ▪ Frequency fluctuation 2 ▪ Target mass flow ▪ Carrier volume flow ▪ Target volume flow ▪ Temp. compensated dynamic viscosity ▪ Temp. compensated kinematic viscosity ▪ Temperature ▪ Status ▪ Volume flow ▪ Oil volume flow ▪ Water volume flow ▪ Water cut	

1) Diagnostic behavior can be changed. This causes the overall status of the measured variable to change.

12.8 Pending diagnostic events

The **Diagnostics** menu allows the user to view the current diagnostic event and the previous diagnostic event separately.

Accessing the remedial action for a diagnostic event:
- Via local display → 174
- Via web browser → 176
- Via "FieldCare" operating tool → 177
- Via "DeviceCare" operating tool → 177

Other pending diagnostic events can be displayed in the **Diagnostic list** submenu → 233.

Navigation
"Diagnostics" menu

Diagnostics	
Actual diagnostics	→ 233
Previous diagnostics	→ 233
Operating time from restart	→ 233
Operating time	→ 233

Parameter overview with brief description

Parameter	Prerequisite	Description	User interface
Actual diagnostics	A diagnostic event has occurred.	Shows the current occured diagnostic event along with its diagnostic information. If two or more messages occur simultaneously, the message with the highest priority is shown on the display.	Symbol for diagnostic behavior, diagnostic code and short message.
Previous diagnostics	Two diagnostic events have already occurred.	Shows the diagnostic event that occurred prior to the current diagnostic event along with its diagnostic information.	Symbol for diagnostic behavior, diagnostic code and short message.
Operating time from restart	–	Shows the time the device has been in operation since the last device restart.	Days (d), hours (h), minutes (m) and seconds (s)
Operating time	–	Indicates how long the device has been in operation.	Days (d), hours (h), minutes (m) and seconds (s)

12.9 Diagnostic list

Up to 5 currently pending diagnostic events are displayed in the **Diagnostic list** submenu along with the associated diagnostic information. If more than 5 diagnostic events are pending, the events with the highest priority are shown on the display.

Navigation path
Diagnostics → Diagnostic list

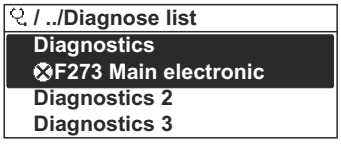

A0014006-EN

33 *Using the example of the local display*

Accessing the remedial action for a diagnostic event:
- Via local display → 174
- Via web browser → 176
- Via "FieldCare" operating tool → 177
- Via "DeviceCare" operating tool → 177

12.10 Event logbook

12.10.1 Reading out the event logbook

A chronological overview of the event messages that have occurred is provided in the **Event logbook** submenu.

Navigation path
Diagnostics menu → **Event logbook** submenu → Event logbook

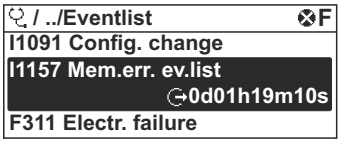

A0014008-EN

34 *Using the example of the local display*

- A maximum of 20 event messages can be displayed in chronological order.
- If the **Extended HistoROM** application package (order option) is enabled in the device, the event logbook can contain up to 100 entries.

The event history includes entries for:
- Diagnostic events → 182
- Information events → 235

In addition to the operating time when the event occurred, each event is also assigned a symbol that indicates whether the event has occurred or is finished:
- Diagnostic event
  - ⊖: Occurrence of the event
  - ⊖: End of the event
- Information event
  ⊖: Occurrence of the event

Accessing the remedial action for a diagnostic event:
- Via local display → 174
- Via web browser → 176
- Via "FieldCare" operating tool → 177
- Via "DeviceCare" operating tool → 177

Filtering the displayed event messages → 235

12.10.2 Filtering the event logbook

Using the **Filter options** parameter you can define which category of event message is displayed in the **Events list** submenu.

Navigation path
Diagnostics → Event logbook → Filter options

Filter categories
- All
- Failure (F)
- Function check (C)
- Out of specification (S)
- Maintenance required (M)
- Information (I)

12.10.3 Overview of information events

Unlike a diagnostic event, an information event is displayed in the event logbook only and not in the diagnostic list.

Info number	Info name
I1000	--------(Device ok)
I1079	Sensor changed
I1089	Power on
I1090	Configuration reset
I1091	Configuration changed
I1092	HistoROM backup deleted
I1111	Density adjust failure
I1137	Electronic changed
I1151	History reset
I1155	Reset electronic temperature
I1156	Memory error trend
I1157	Memory error event list
I1209	Density adjustment ok
I1221	Zero point adjust failure
I1222	Zero point adjustment ok
I1256	Display: access status changed
I1278	I/O module restarted
I1335	Firmware changed
I1361	Web server: login failed
I1397	Fieldbus: access status changed
I1398	CDI: access status changed
I1444	Device verification passed
I1445	Device verification failed
I1447	Record application reference data
I1448	Application reference data recorded
I1449	Recording application ref. data failed
I1450	Monitoring off
I1451	Monitoring on

Info number	Info name
I1457	Measurement error verification failed
I1459	I/O module verification failed
I1460	HBSI verification failed
I1461	Sensor verification failed
I1462	Sensor electronic module verific. failed
I1512	Download started
I1513	Download finished
I1514	Upload started
I1515	Upload finished
I1618	I/O module 2 replaced
I1619	I/O module 3 replaced
I1621	I/O module 4 replaced
I1622	Calibration changed
I1624	Reset all totalizers
I1625	Write protection activated
I1626	Write protection deactivated
I1627	Web server: login successful
I1628	Display: login successful
I1629	CDI: login successful
I1631	Web server access changed
I1632	Display: login failed
I1633	CDI: login failed
I1634	Reset to factory settings
I1635	Reset to delivery settings
I1639	Max. switch cycles number reached
I1649	Hardware write protection activated
I1650	Hardware write protection deactivated
I1712	New flash file received
I1725	Sensor electronic module (ISEM) changed
I1726	Configuration backup failed

12.11 Resetting the device

The entire device configuration or some of the configuration can be reset to a defined state with the **Device reset** parameter (→ 141).

12.11.1 Function scope of the "Device reset" parameter

Options	Description
Cancel	No action is executed and the user exits the parameter.
To delivery settings	Every parameter for which a customer-specific default setting was ordered is reset to the customer-specific value. All other parameters are reset to the factory setting.

Options	Description
Restart device	The restart resets every parameter with data stored in volatile memory (RAM) to the factory setting (e.g. measured value data). The device configuration remains unchanged.
Restore S-DAT backup	Restores the data that is saved on the S-DAT. Additional information: This function can be used to resolve the memory issue "083 Memory content inconsistent" or to restore the S-DAT data when a new S-DAT has been installed. This option is displayed only in an alarm condition.

12.12 Device information

The **Device information** submenu contains all parameters that display different information for device identification.

Navigation

"Diagnostics" menu → Device information

▶ **Device information**

Device tag	→ 237
Serial number	→ 237
Firmware version	→ 237
Device name	→ 237
Order code	→ 238
Extended order code 1	→ 238
Extended order code 2	→ 238
Extended order code 3	→ 238
ENP version	→ 238

Parameter overview with brief description

Parameter	Description	User interface	Factory setting
Device tag	Shows name of measuring point.	Max. 32 characters such as lower-case letters or numbers.	–
Serial number	Shows the serial number of the measuring device.	Max. 11-digit character string comprising letters and numbers.	–
Firmware version	Shows the device firmware version installed.	Character string in the format xx.yy.zz	–
Device name	Shows the name of the transmitter. The name can be found on the nameplate of the transmitter.	Promass 300/500	–

Parameter	Description	User interface	Factory setting
Device name		Max. 32 characters such as lower-case letters or numbers.	eh-promass100-xxxxx
Order code	Shows the device order code. The order code can be found on the nameplate of the sensor and transmitter in the "Order code" field.	Character string composed of letters, numbers and certain punctuation marks (e.g. /).	–
Extended order code 1	Shows the 1st part of the extended order code. The extended order code can also be found on the nameplate of the sensor and transmitter in the "Ext. ord. cd." field.	Character string	–
Extended order code 2	Shows the 2nd part of the extended order code. The extended order code can also be found on the nameplate of the sensor and transmitter in the "Ext. ord. cd." field.	Character string	–
Extended order code 3	Shows the 3rd part of the extended order code. The extended order code can also be found on the nameplate of the sensor and transmitter in the "Ext. ord. cd." field.	Character string	–
ENP version	Shows the version of the electronic nameplate (ENP).	Character string	–

12.13 Firmware history

Release date	Firmware version	Order code for "Firmware version"	Firmware Changes	Documentation type	Documentation
2022	01.01.zz	Option **67**	Original firmware	Operating instructions	BA02118D/06/EN/01.21

It is possible to flash the firmware to the current version or an existing previous version via the service interface.

For the compatibility of the firmware version with the installed device description files and operating tools, observe the information about the device in the "Manufacturer's information" document.

The manufacturer's information is available:
- In the Download Area of the Endress+Hauser Web site: www.endress.com → Downloads
- Specify the following details:
  - Product root: e.g. 8X3B
    The product root is the first part of the order code: see the nameplate on the device.
  - Text search: Manufacturer's information
  - Media type: Documentation – Technical Documentation

13 Maintenance

13.1 Maintenance work

No special maintenance work is required.

13.1.1 Cleaning

Cleaning of surfaces not in contact with the medium

1. Recommendation: Use a lint-free cloth that is either dry or slightly dampened using water.
2. Do not use sharp objects or aggressive cleaning agents that could damage surfaces (e.g. displays, housing) and seals.
3. Do not use high-pressure steam.
4. Ensure compliance with the protection class of the device.

NOTICE

Cleaning agents can damage the surfaces!

Incorrect cleaning agents can damage the surfaces!

- Do not use cleaning agents containing concentrated mineral acids, alkalis or organic solvents e.g. benzyl alcohol, methylene chloride, xylene, concentrated glycerol cleaners or acetone.

Cleaning of surfaces in contact with the medium

Note the following for cleaning and sterilization in place (CIP/SIP):

- Use only cleaning agents to which the materials in contact with the medium are sufficiently resistant.
- Observe the permitted maximum medium temperature.

13.2 Measuring and test equipment

Endress+Hauser offers a variety of measuring and testing equipment, such as Netilion or device tests.

Your Endress+Hauser Sales Center can provide detailed information on the services.

List of some of the measuring and testing equipment: → 243

13.3 Maintenance services

Endress+Hauser offers a wide variety of services for maintenance such as recalibration, maintenance service or device tests.

Your Endress+Hauser Sales Center can provide detailed information on the services.

14 Repair

14.1 General notes

14.1.1 Repair and conversion concept

The Endress+Hauser repair and conversion concept provides for the following:
- The measuring devices have a modular design.
- Spare parts are grouped into logical kits with the associated Installation Instructions.
- Repairs are carried out by Endress+Hauser Service or by appropriately trained customers.
- Certified devices can only be converted to other certified devices by Endress+Hauser Service or at the factory.

14.1.2 Notes for repair and conversion

For repair and conversion of a measuring device, observe the following notes:
- ▶ Use only original Endress+Hauser spare parts.
- ▶ Carry out the repair according to the Installation Instructions.
- ▶ Observe the applicable standards, federal/national regulations, Ex documentation (XA) and certificates.
- ▶ Document all repairs and conversions and enter the details in Netilion Analytics.

14.2 Spare parts

Device Viewer (www.endress.com/deviceviewer):
All the spare parts for the measuring device, along with the order code, are listed here and can be ordered. If available, users can also download the associated Installation Instructions.

Measuring device serial number:
- Is located on the nameplate of the device.
- Can be read out via the **Serial number** parameter (→ 🗎 237) in the **Device information** submenu.

14.3 Repair services

Endress+Hauser offers a wide range of services.

Your Endress+Hauser Sales Center can provide detailed information on the services.

14.4 Return

The requirements for safe device return can vary depending on the device type and national legislation.

1. Refer to the web page for information: https://www.endress.com
2. If returning the device, pack the device in such a way that it is reliably protected against impact and external influences. The original packaging provides the best protection.

14.5 Disposal

If required by the Directive 2012/19/EU on waste electrical and electronic equipment (WEEE), the product is marked with the depicted symbol in order to minimize the disposal of WEEE as unsorted municipal waste. Do not dispose of products bearing this marking as unsorted municipal waste. Instead, return them to the manufacturer for disposal under the applicable conditions.

14.5.1 Removing the measuring instrument

1. Switch off the device.

WARNING

Danger to persons from process conditions!

- Beware of hazardous process conditions such as pressure in the measuring instrument, high temperatures or aggressive media.

2. Carry out the installation and connection steps from the "Installing the device" and "Connecting the device" sections in reverse order. Observe the safety instructions.

14.5.2 Disposing of the measuring instrument

WARNING

Danger to personnel and environment from fluids that are hazardous to health.

- Ensure that the measuring device and all cavities are free of fluid residues that are hazardous to health or the environment, e.g. substances that have permeated into crevices or diffused through plastic.

Observe the following notes during disposal:

- Observe valid federal/national regulations.
- Ensure proper separation and reuse of the device components.

15 Accessories

Various accessories, which can be ordered with the device or subsequently from Endress +Hauser, are available for the device. Detailed information on the order code in question is available from your local Endress+Hauser sales center or on the product page of the Endress+Hauser website: www.endress.com.

15.1 Device-specific accessories

15.1.1 For the transmitter

Accessory	Description
Proline 300 transmitter	Transmitter for replacement or storage. Use the order code to define the following specifications: ▪ Approvals ▪ Output ▪ Input ▪ Display/operation ▪ Housing ▪ Software Order code: 8X3BXX Installation Instructions EA01200D
Remote display and operating module DKX001	▪ If ordered directly with the measuring instrument: Order code for "Display; operation", option O "Remote display 4-line, illuminated; 10 m (30 ft) cable; touch control" ▪ If ordered separately: ▪ Measuring instrument: order code for "Display; operation", option M "W/o, prepared for remote display" ▪ DKX001: Via the separate product structure DKX001 ▪ If ordered subsequently: DKX001: Via the separate product structure DKX001 **Mounting bracket for DKX001** ▪ If ordered directly: order code for "Accessory enclosed", option RA "Mounting bracket, pipe 1/2"' ▪ If ordered subsequently: order number: 71340960 **Connecting cable (replacement cable)** Via the separate product structure: DKX002 Further information on display and operating module DKX001→ 📄 266. Special Documentation SD01763D
External WLAN antenna	External WLAN antenna with 1.5 m (59.1 in) connecting cable and two angle brackets. Order code for "Accessory enclosed", option P8 "Wireless antenna wide area". ▪ The external WLAN antenna is not suitable for use in hygienic applications. ▪ Further information on the WLAN interface → 📄 71. Order number: 71351317 Installation Instructions EA01238D
Protective cover	Is used to protect the measuring instrument from the effects of the weather: e.g. rainwater, excess heating from direct sunlight. Order number: 71343505 Installation Instructions EA01160D

15.2 Communication-specific accessories

Accessories	Description
Fieldgate FXA42	Transmission of the measured values of connected 4 to 20 mA analog measuring instruments, as well as digital measuring instruments ▪ Technical Information TI01297S ▪ Operating Instructions BA01778S ▪ Product page: www.endress.com/fxa42
Field Xpert SMT50	The Field Xpert SMT50 tablet PC for device configuration enables mobile plant asset management in non-hazardous areas. It is suitable for commissioning and maintenance staff to manage field instruments with a digital communication interface and to record progress. This tablet PC is designed as an all-in-one solution with a preinstalled driver library and is an easy-to-use, touch-sensitive tool which can be used to manage field instruments throughout their entire life cycle. ▪ Technical Information TI01555S ▪ Operating Instructions BA02053S ▪ Product page: www.endress.com/smt50
Field Xpert SMT70	The Field Xpert SMT70 tablet PC for device configuration enables mobile plant asset management in hazardous and non-hazardous areas. It is suitable for commissioning and maintenance staff to manage field instruments with a digital communication interface and to record progress. This tablet PC is designed as an all-in-one solution with a preinstalled driver library and is an easy-to-use, touch-sensitive tool which can be used to manage field instruments throughout their entire life cycle. ▪ Technical Information TI01342S ▪ Operating Instructions BA01709S ▪ Product page: www.endress.com/smt70
Field Xpert SMT77	The Field Xpert SMT77 tablet PC for device configuration enables mobile plant asset management in areas categorized as Ex Zone 1. ▪ Technical Information TI01418S ▪ Operating Instructions BA01923S ▪ Product page: www.endress.com/smt77

15.3 Service-specific accessories

Accessory	Description
Applicator	Software for selecting and sizing Endress+Hauser measuring instruments: ▪ Choice of measuring instruments for industrial requirements ▪ Calculation of all the necessary data for identifying the optimum flowmeter: e.g. nominal diameter, pressure loss, flow velocity and measurement accuracy. ▪ Graphic display of the calculation results ▪ Determining the partial order code. Administration, documentation and access to all project-related data and parameters over the entire life cycle of a project. Applicator is available: Via the Internet: https://portal.endress.com/webapp/applicator
Netilion	IIoT ecosystem: Unlock knowledge With the Netilion IIoT ecosystem, Endress+Hauser allows you to optimize your plant performance, digitize workflows, share knowledge, and enhance collaboration. Based on decades of experience in process automation, Endress+Hauser offers the process industry an IIoT ecosystem that enables you to gain useful insights from data. These insights can be used to optimize processes, leading to increased plant availability, efficiency, and reliability - ultimately resulting in a more profitable plant. www.netilion.endress.com

Accessory	Description
FieldCare	FDT-based plant asset management tool from Endress+Hauser. It can configure all intelligent field units in your system and helps you manage them. By using the status information, it is also a simple but effective way of checking their status and condition. Operating Instructions BA00027S and BA00059S
DeviceCare	Tool to connect and configure Endress+Hauser field devices. ▪ Technical Information: TI01134S ▪ Innovation brochure: IN01047S

15.4 System components

Accessories	Description
Memograph M graphic data manager	The Memograph M graphic data manager provides information on all the relevant measured variables. Measured values are recorded correctly, limit values are monitored and measuring points analyzed. The data are stored in the 256 MB internal memory and also on a SD card or USB stick. ▪ Technical Information TI00133R ▪ Operating Instructions BA00247R
Cerabar M	The pressure transmitter for measuring the absolute and gauge pressure of gases, steam and liquids. It can be used to read in the operating pressure value. ▪ Technical Information TI00426P and TI00436P ▪ Operating Instructions BA00200P and BA00382P
Cerabar S	The pressure transmitter for measuring the absolute and gauge pressure of gases, steam and liquids. It can be used to read in the operating pressure value. ▪ Technical Information TI00383P ▪ Operating Instructions BA00271P
iTEMP	The temperature transmitters can be used in all applications and are suitable for the measurement of gases, steam and liquids. They can be used to read in the medium temperature. "Fields of Activity" document FA00006T

16 Technical data

16.1 Application

The measuring device is intended only for the flow measurement of liquids and gases.

Depending on the version ordered, the measuring device can also measure potentially explosive, flammable, poisonous and oxidizing media.

To ensure that the device remains in proper operating condition for its service life, use the measuring device only for media against which the process-wetted materials are sufficiently resistant.

16.2 Function and system design

Measuring principle	Mass flow measurement based on the Coriolis measuring principle
Measuring system	The device consists of a transmitter and a sensor. The device is available as a compact version: The transmitter and sensor form a mechanical unit. For information on the structure of the measuring instrument → 📄 14

16.3 Input

Measured variable

Direct measured variables

- Mass flow
- Density
- Temperature

Calculated measured variables

- Volume flow
- Corrected volume flow
- Reference density

Measuring range

Measuring range for liquids

DN		Measuring range full scale values $\dot{m}_{min(F)}$ to $\dot{m}_{max(F)}$	
[mm]	[in]	[t/h]	[tn. sh./h]
300	12	0 to 4 100	0 to 4 520
350	14	0 to 4 100	0 to 4 520
400	16	0 to 4 100	0 to 4 520

Measuring range for gases

The full scale value depends on the density and the speed of sound of the gas used. The full scale value can be calculated with the following formulas:

$\dot{m}_{max\ (G)}$ = minimum of $(\dot{m}_{max(F)} \cdot \rho_G : x)$ and

$(\rho_G \cdot (c_G/2) \cdot d_i^2 \cdot (\pi/4) \cdot 3600 \cdot n)$

$\dot{m}_{max(G)}$	Maximum full scale value for gas [kg/h]
$\dot{m}_{max(F)}$	Maximum full scale value for liquid [kg/h]
$\dot{m}_{max(G)} < \dot{m}_{max(F)}$	$\dot{m}_{max(G)}$ can never be greater than $\dot{m}_{max(F)}$
ρ_G	Gas density in [kg/m³] at operating conditions
x	Limitation constant for max. gas flow [kg/m³]
c_G	Speed of sound (gas) [m/s]
d_i	Measuring tube internal diameter [m]
π	Pi
n = 4	Number of measuring tubes

DN		x
[mm]	[in]	[kg/m³]
300	12	200
350	14	200
400	16	200

If calculating the full scale value using the two formulas:

1. Calculate the full scale value with both formulas.

2. The smaller value is the value that must be used.

Recommended measuring range

Flow limit → 262

Operable flow range

Over 1000 : 1.

Flow rates above the preset full scale value do not override the electronics unit, with the result that the totalizer values are registered correctly.

Input signal

External measured values

To increase the measurement accuracy of certain measured variables or to calculate the corrected volume flow for gases, the automation system can continuously write different measured values to the measuring instrument:
- Operating pressure to increase measurement accuracy (Endress+Hauser recommends the use of a pressure measuring instrument for absolute pressure, e.g. Cerabar M or Cerabar S)
- Medium temperature to increase measurement accuracy (e.g. iTEMP)
- Reference density for calculating the corrected volume flow for gases

Various pressure and temperature measuring devices can be ordered from Endress +Hauser: see "Accessories" section → 244

It is recommended to read in external measured values to calculate the corrected volume flow.

Current input

The measured values are written from the automation system to the measuring device via the current input → 247.

Digital communication

The measured values are written by the automation system via PROFINET.

Current input 0/4 to 20 mA

Current input	0/4 to 20 mA (active/passive)
Current span	▪ 4 to 20 mA (active) ▪ 0/4 to 20 mA (passive)
Resolution	1 µA
Voltage drop	Typically: 0.6 to 2 V for 3.6 to 22 mA (passive)
Maximum input voltage	≤ 30 V (passive)
Open-circuit voltage	≤ 28.8 V (active)
Possible input variables	▪ Pressure ▪ Temperature ▪ Density

Status input

Maximum input values	▪ DC −3 to 30 V ▪ If status input is active (ON): R_i >3 kΩ
Response time	Configurable: 5 to 200 ms

Input signal level	▪ Low signal: DC −3 to +5 V ▪ High signal: DC 12 to 30 V
Assignable functions	▪ Off ▪ Reset the individual totalizers separately ▪ Reset all totalizers ▪ Flow override

16.4 Output

Output signal

PROFINET

Standards	In accordance with IEEE 802.3

Current output 4 to 20 mA

Signal mode	Can be set to: ▪ Active ▪ Passive
Current range	Can be set to: ▪ 4 to 20 mA NAMUR ▪ 4 to 20 mA US ▪ 4 to 20 mA ▪ 0 to 20 mA (only if the signal mode is active) ▪ Fixed current
Maximum output values	22.5 mA
Open-circuit voltage	DC 28.8 V (active)
Maximum input voltage	DC 30 V (passive)
Load	0 to 700 Ω
Resolution	0.38 µA
Damping	Configurable: 0 to 999.9 s
Assignable measured variables	▪ Mass flow ▪ Volume flow ▪ Corrected volume flow ▪ Density ▪ Reference density ▪ Temperature ▪ Electronics temperature ▪ Oscillation frequency 0 ▪ Oscillation damping 0 ▪ Signal asymmetry ▪ Exciter current 0 The range of options increases if the measuring device has one or more application packages.

Pulse/frequency/switch output

Function	Can be configured as pulse, frequency or switch output
Version	Open collector Can be set to: ▪ Active ▪ Passive ▪ Passive NAMUR Ex-i, passive
Maximum input values	DC 30 V, 250 mA (passive)
Open-circuit voltage	DC 28.8 V (active)
Voltage drop	For 22.5 mA: ≤ DC 2 V
Pulse output	
Maximum input values	DC 30 V, 250 mA (passive)
Maximum output current	22.5 mA (active)

Open-circuit voltage	DC 28.8 V (active)
Pulse width	Configurable: 0.05 to 2 000 ms
Maximum pulse rate	10 000 Impulse/s
Pulse value	Configurable
Assignable measured variables	▪ Mass flow ▪ Volume flow ▪ Corrected volume flow The range of options increases if the measuring device has one or more application packages.
Frequency output	
Maximum input values	DC 30 V, 250 mA (passive)
Maximum output current	22.5 mA (active)
Open-circuit voltage	DC 28.8 V (active)
Output frequency	Configurable: end value frequency 2 to 10 000 Hz(f_{max} = 12 500 Hz)
Damping	Configurable: 0 to 999.9 s
Pulse/pause ratio	1:1
Assignable measured variables	▪ Mass flow ▪ Volume flow ▪ Corrected volume flow ▪ Density ▪ Reference density ▪ Temperature ▪ Electronics temperature ▪ Oscillation frequency 0 ▪ Oscillation damping 0 ▪ Signal asymmetry ▪ Exciter current 0 The range of options increases if the measuring device has one or more application packages.
Switch output	
Maximum input values	DC 30 V, 250 mA (passive)
Open-circuit voltage	DC 28.8 V (active)
Switching behavior	Binary, conductive or non-conductive
Switching delay	Configurable: 0 to 100 s
Number of switching cycles	Unlimited

Assignable functions	▪ Disable
	▪ On
	▪ Diagnostic behavior
	▪ Limit
	  ▪ Mass flow
	  ▪ Volume flow
	  ▪ Corrected volume flow
	  ▪ Density
	  ▪ Reference density
	  ▪ Temperature
	  ▪ Totalizer 1-3
	▪ Flow direction monitoring
	▪ Status
	  ▪ Partially filled pipe detection
	  ▪ Low flow cut off
	The range of options increases if the measuring device has one or more application packages.

Relay output

Function	Switch output
Version	Relay output, galvanically isolated
Switching behavior	Can be set to: ▪ NO (normally open), factory setting ▪ NC (normally closed)
Maximum switching capacity (passive)	▪ DC 30 V, 0.1 A ▪ AC 30 V, 0.5 A

Assignable functions	▪ Disable
	▪ On
	▪ Diagnostic behavior
	▪ Limit
	  ▪ Mass flow
	  ▪ Volume flow
	  ▪ Corrected volume flow
	  ▪ Density
	  ▪ Reference density
	  ▪ Temperature
	  ▪ Totalizer 1-3
	▪ Flow direction monitoring
	▪ Status
	  ▪ Partially filled pipe detection
	  ▪ Low flow cut off
	The range of options increases if the measuring device has one or more application packages.

User-configurable input/output

One specific input or output is assigned to a user-configurable input/output (configurable I/O) during device commissioning.

The following inputs and outputs are available for assignment:
- Choice of current output: 4 to 20 mA (active), 0/4 to 20 mA (passive)
- Pulse/frequency/switch output
- Choice of current input: 4 to 20 mA (active), 0/4 to 20 mA (passive)
- Status input

Signal on alarm

Depending on the interface, failure information is displayed as follows:

PROFINET

Device diagnostics	According to "Application Layer protocol for decentralized periphery", Version 2.3

Current output

Current output 4-20 mA	
Failure mode	Configurable: ▪ 4 to 20 mA in accordance with NAMUR recommendation NE 43 ▪ 4 to 20 mA in accordance with US ▪ Min. value: 3.59 mA ▪ Max. value: 22.5 mA ▪ Definable value between: 3.59 to 22.5 mA ▪ Actual value ▪ Last valid value
Current output 4-20 mA	
Failure mode	Configurable: ▪ Maximum alarm: 22 mA ▪ Definable value between: 0 to 20.5 mA

Pulse/frequency/switch output

Pulse output	
Failure mode	Configurable: ▪ Actual value ▪ No pulses
Frequency output	
Failure mode	Configurable: ▪ Actual value ▪ 0 Hz ▪ Definable value between: 2 to 12 500 Hz
Switch output	
Failure mode	Configurable: ▪ Current status ▪ Open ▪ Closed

Relay output

Failure mode	Choose from: ▪ Current status ▪ Open ▪ Closed

Local display

Plain text display	With information on cause and remedial measures
Backlight	Red lighting indicates a device error.

Status signal as per NAMUR recommendation NE 107

Interface/protocol

- Via digital communication:
  PROFINET
- Via service interface
  - Service interface CDI-RJ45
  - WLAN interface
- Plain text display
  With information on cause and remedial actions

Web browser

Plain text display	With information on cause and remedial measures

LEDs

Status information	Status indicated by various LEDs The following information is displayed depending on the device version: ▪ Supply voltage active ▪ Data transmission active ▪ Device alarm/error has occurred ▪ Network available ▪ Connection established ▪ PROFINET blinking feature Diagnostic information via LEDs → 172

Low flow cut off

The switch points for low flow cut off are user-selectable.

Galvanic isolation

The outputs are galvanically isolated:
- from the power supply
- from one another
- from the protective ground connection (PE)

protocol-specific data

Protocol	Application layer protocol for decentral device periphery and distributed automation, Version 2.3
Communication type	100 Mbit/s
Conformity class	Conformance class B
Netload Class	Netload Class 2 100 Mbit/s
Baud rates	Automatic 100 Mbit/s with full-duplex detection
Periods	From 8 ms
Polarity	Auto-polarity for automatic correction of crossed TxD and RxD pairs
Media Redundancy Protocol (MRP)	Yes
System redundancy support	System redundancy S2 (2 AR with 1 NAP)
Device profile	Application interface identifier 0xF600 Generic device
Manufacturer ID	0x11
Device type ID	0x843B
Device description files (GSD, DTM, DD)	Information and files available at: ▪ www.endress.com On the product page for the device: Documents/Software → Device drivers ▪ www.profibus.com
Supported connections	▪ 2 x AR (IO Controller AR) ▪ 1 x AR (IO-Supervisor Device AR connection allowed) ▪ 1 x Input CR (Communication Relation) ▪ 1 x Output CR (Communication Relation) ▪ 1 x Alarm CR (Communication Relation)
Configuration options for measuring instrument	▪ DIP switches on the electronics module, for device name assignment (last part) ▪ Asset management software (FieldCare, DeviceCare, Field Xpert) ▪ Integrated web server via web browser and IP address ▪ Device master file (GSD), can be read out via the integrated web server of the measuring instrument. ▪ Onsite operation

Configuration of the device name	▪ DIP switches on the electronics module, for device name assignment (last part) ▪ DCP protocol ▪ Asset management software (FieldCare, DeviceCare, Field Xpert) ▪ Integrated web server

Supported functions	▪ Identification & Maintenance, simple device identifier via:
	  ▪ Control system
	  ▪ Nameplate
	▪ Measured value status
	  The process variables are communicated with a measured value status
	▪ Blinking feature via the local display for simple device identification and assignment
	▪ Device operation via asset management software (e.g. FieldCare, DeviceCare, SIMATIC PDM)

System integration	Information regarding system integration → 📄 76. ▪ Cyclic data transmission ▪ Overview and description of the modules ▪ Status coding ▪ Startup configuration ▪ Factory setting

16.5 Power supply

Terminal assignment

→ 📄 34

Available device plugs

→ 📄 34

Available device plugs

→ 📄 34

Supply voltage

Order code for "Power supply"	Terminal voltage		Frequency range
Option **D**	DC 24 V	±20%	–
Option **E**	AC 100 to 240 V	−15 to 10%	50/60 Hz
Option **I**	DC 24 V	±20%	–
	AC 100 to 240 V	−15 to 10%	50/60 Hz

Power consumption

Transmitter

Max. 10 W (active power)

switch-on current	Max. 36 A (<5 ms) as per NAMUR Recommendation NE 21

Current consumption

Transmitter

- Max. 400 mA (24 V)
- Max. 200 mA (110 V, 50/60 Hz; 230 V, 50/60 Hz)

Power supply failure

- Totalizers stop at the last value measured.
- Depending on the device version, the configuration is retained in the device memory or in the plug-in memory (HistoROM DAT).
- Error messages (incl. total operated hours) are stored.

Overcurrent protection element	The device must be operated with a dedicated circuit breaker, as it does not have an ON/OFF switch of its own. ▪ The circuit breaker must be easy to reach and labeled accordingly. ▪ Permitted nominal current of the circuit breaker: 2 A up to maximum 10 A.
Electrical connection	→ 📄 35
Potential equalization	→ 📄 40
Terminals	Spring-loaded terminals: Suitable for strands and strands with ferrules. Conductor cross-section 0.2 to 2.5 mm^2 (24 to 12 AWG).

Cable entries	▪ Cable gland: M20 × 1.5 with cable ⌀ 6 to 12 mm (0.24 to 0.47 in)
	▪ Thread for cable entry:
	  ▪ NPT ½"
	  ▪ G ½"
	  ▪ M20

Cable specification	→ 📄 31

Overvoltage protection

Mains voltage fluctuations	→ 📄 254
Overvoltage category	Overvoltage category II
Short-term, temporary overvoltage	Between cable and ground up to 1200 V, for max. 5 s
Long-term, temporary overvoltage	Between cable and ground up to 500 V

16.6 Performance characteristics

Reference operating conditions

- Error limits based on ISO 11631
- Water
  - +15 to +45 °C (+59 to +113 °F)
  - 2 to 6 bar (29 to 87 psi)
- Data as indicated in the calibration protocol
- Accuracy based on accredited calibration rigs according to ISO 17025

To obtain measured errors, use the *Applicator* sizing tool → 📄 243

Maximum measurement error

o.r. = of reading; 1 g/cm^3 = 1 kg/l; T = medium temperature

Base accuracy

Design fundamentals → 📄 258

Mass flow and volume flow (liquids)

- ±0.05 % o.r. (optional for mass flow: PremiumCal; order code for "Calibration flow", option D)
- ±0.10 % o.r. (standard)

Mass flow (gases)

±0.35 % o.r.

Density (liquids)

Under reference conditions [g/cm³]	Standard density calibration [g/cm³]	Extended density calibration [1) 2)] [g/cm³]
±0.0005	±0.0005	±0.0005

1) Valid range for extended density calibration: 0 to 2 g/cm³, +20 to +60 °C (+68 to +140 °F)
2) order code for "Application package", option E1 "Extended density"

Temperature

±0.5 °C ± 0.005 · T °C (±0.9 °F ± 0.003 · (T − 32) °F)

Zero point stability

DN		Zero point stability	
[mm]	[in]	[kg/h]	[lb/min]
300	12	137	5.03
350	14	137	5.03
400	16	137	5.03

Flow values

Flow values as turndown parameters depending on nominal diameter.

SI units

DN	1:1	1:10	1:20	1:50	1:100	1:500
[mm]	[kg/h]	[kg/h]	[kg/h]	[kg/h]	[kg/h]	[kg/h]
300	4 100 000	410 000	205 000	82 000	41 000	8 200
350	4 100 000	410 000	205 000	82 000	41 000	8 200
400	4 100 000	410 000	205 000	82 000	41 000	8 200

US units

DN	1:1	1:10	1:20	1:50	1:100	1:500
[inch]	[lb/min]	[lb/min]	[lb/min]	[lb/min]	[lb/min]	[lb/min]
12	150 700	15 070	7 535	3 014	1 507	301.4
14	150 700	15 070	7 535	3 014	1 507	301.4
16	150 700	15 070	7 535	3 014	1 507	301.4

Accuracy of outputs

The outputs have the following base accuracy specifications:

Current output

Accuracy	±5 µA

Pulse/frequency output

o.r. = of reading

Accuracy	Max. ±50 ppm o.r. (over the entire ambient temperature range)

Repeatability

o.r. = of reading; 1 g/cm^3 = 1 kg/l; T = medium temperature

Base repeatability

Design fundamentals → 258

Mass flow and volume flow (liquids)

±0.025 % o.r. (PremiumCal)
±0.05 % o.r.

Mass flow (gases)

±0.25 % o.r.

Density (liquids)

±0.00025 g/cm^3

Temperature

±0.25 °C ± 0.0025 · T °C (±0.45 °F ± 0.0015 · (T−32) °F)

Response time

The response time depends on the configuration (damping).

Influence of ambient temperature

Current output

Temperature coefficient	Max. 1 µA/°C

Pulse/frequency output

Temperature coefficient	No additional effect. Included in accuracy.

Influence of medium temperature

Mass flow

o.f.s. = of full scale value

If there is a difference between the temperature during zero adjustment and the process temperature, the additional measurement error of the sensors is typically ±0.0002 %o.f.s./°C (±0.0001 % o. f.s./°F).

The influence is reduced when the zero adjustment is performed at process temperature.

Density

- If there is a difference between the density calibration temperature and the process temperature, the measurement error of the sensors is typically ±0.00005 g/cm^3/°C (±0.000025 g/cm^3/°F). Field density adjustment is possible.
-

Extended density specification

If the process temperature is outside the valid range (→ 255) the measurement error is ±0.000025 g/cm^3 /°C (±0.0000125 g/cm^3 /°F)

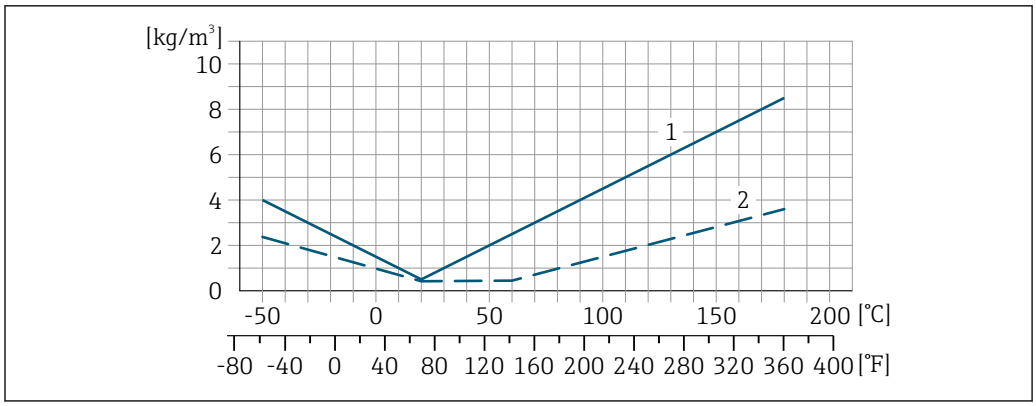

1 Field density adjustment, for example at +20 °C (+68 °F)
2 Extended density calibration

Temperature
±0.005 · T °C (± 0.005 · (T − 32) °F)

Influence of medium pressure

The following shows how the process pressure (gauge pressure) affects the accuracy of the mass flow.

o.r. = of reading

It is possible to compensate for the effect by:
- Reading in the current pressure measured value via the current input or a digital input.
- Specifying a fixed value for the pressure in the device parameters.

Operating Instructions .

DN		[% o.r./bar]	[% o.r./psi]
[mm]	[in]		
300	12	−0.009	−0.0006
350	14	−0.009	−0.0006
400	16	−0.009	−0.0006

Design fundamentals

o.r. = of reading, o.f.s. = of full scale value

BaseAccu = base accuracy in % o.r., BaseRepeat = base repeatability in % o.r.

MeasValue = measured value; ZeroPoint = zero point stability

Calculation of the maximum measured error as a function of the flow rate

Flow rate	Maximum measured error in % o.r.
$\geq \frac{\text{ZeroPoint}}{\text{BaseAccu}} \cdot 100$ A0021332	± BaseAccu A0021339
$< \frac{\text{ZeroPoint}}{\text{BaseAccu}} \cdot 100$ A0021333	$\pm \frac{\text{ZeroPoint}}{\text{MeasValue}} \cdot 100$ A0021334

Calculation of the maximum repeatability as a function of the flow rate

Flow rate	Maximum repeatability in % o.r.
$\geq \frac{½ \cdot \text{ZeroPoint}}{\text{BaseRepeat}} \cdot 100$ A0021335	± BaseRepeat A0021340
$< \frac{½ \cdot \text{ZeroPoint}}{\text{BaseRepeat}} \cdot 100$ A0021336	$\pm ½ \cdot \frac{\text{ZeroPoint}}{\text{MeasValue}} \cdot 100$ A0021337

Example of maximum measurement error

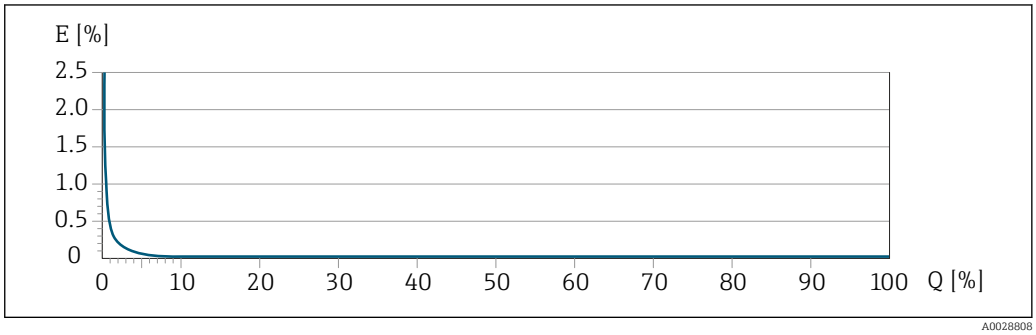

E Maximum measurement error in % o.r. (example with PremiumCal)
Q Flow rate in % of maximum full scale value

16.7 Installation

Installation requirements

→ 21

16.8 Environment

Ambient temperature range

→ 23

Temperature tables

Observe the interdependencies between the permitted ambient and fluid temperatures when operating the device in hazardous areas.

For detailed information on the temperature tables, see the separate document entitled "Safety Instructions" (XA) for the device.

Storage temperature

−50 to +80 °C (−58 to +176 °F)

Climate class

DIN EN 60068-2-38 (test Z/AD)

Relative humidity

The device is suitable for use in outdoor and indoor areas with a relative humidity of 4 to 95%.

Operating height

According to EN 61010-1
≤ 2 000 m (6 562 ft)

Degree of protection	**Transmitter** ▪ IP66/67, Type 4X enclosure, suitable for pollution degree 4 ▪ When the housing is open: IP20, Type 1 enclosure, suitable for pollution degree 2 ▪ Display module: IP20, Type 1 enclosure, suitable for pollution degree 2 **Optional** Order code for "Sensor options", option CM "IP69" **External WLAN antenna** IP67
Vibration resistance and shock resistance	**Sinusoidal vibration similar to IEC 60068-2-6** ▪ 2 to 8.4 Hz, 3.5 mm peak ▪ 8.4 to 2 000 Hz, 1 g peak **Broadband random vibration similar to IEC 60068-2-64** ▪ 10 to 200 Hz, 0.003 g^2/Hz ▪ 200 to 2 000 Hz, 0.001 g^2/Hz ▪ Total: 1.54 g rms **Half-sine shocks similar to IEC 60068-2-27** 6 ms 30 g **Rough handling shocks similar to IEC 60068-2-31**
Mechanical load	Transmitter housing: ▪ Protect against mechanical effects, such as shock or impact ▪ Do not use as a ladder or climbing aid
Electromagnetic compatibility (EMC)	▪ As per IEC/EN 61326 and NAMUR Recommendation 21 (NE 21), NAMUR Recommendation 21 (NE 21) is fulfilled when the device is installed in accordance with NAMUR Recommendation 98 (NE 98). ▪ As per IEC/EN 61000-6-2 and IEC/EN 61000-6-4 Details are provided in the Declaration of Conformity. This unit is not intended for use in residential environments and cannot guarantee adequate protection of the radio reception in such environments.

16.9 Process

Medium temperature range	−50 to +180 °C (−58 to +356 °F)

Dependency of ambient temperature on medium temperature

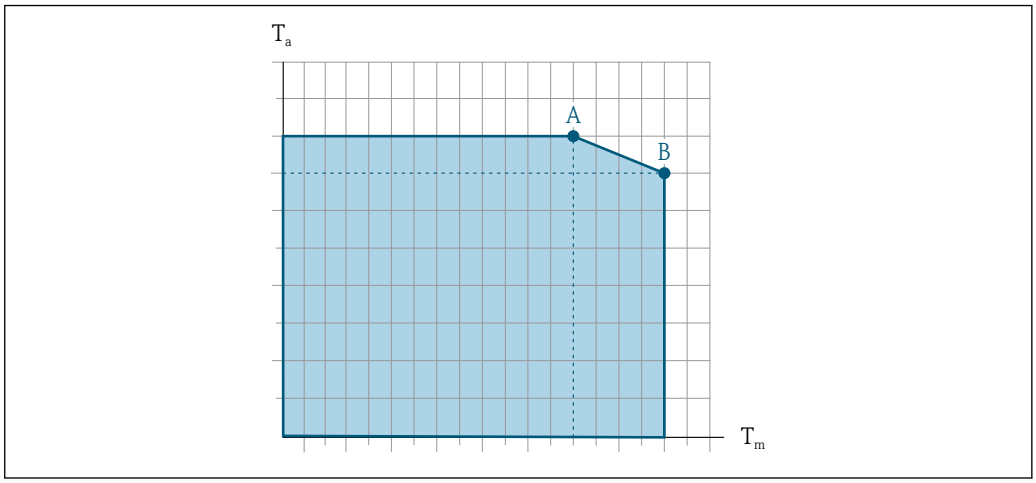

35 *Exemplary representation, values in the table below.*

T_a Ambient temperature
T_m Medium temperature
A Maximum permitted medium temperature T_m at $T_{a\,max}$ = 60 °C (140 °F); higher medium temperatures T_m require a reduction in the ambient temperature T_a
B Maximum permitted ambient temperature T_a for the maximum specified medium temperature T_m of the sensor

Values for devices that are used in the hazardous area:
Separate Ex documentation (XA) for the device → 274.

Not insulated				Insulated			
A		B		A		B	
T_a	T_m	T_a	T_m	T_a	T_m	T_a	T_m
60 °C (140 °F)	170 °C (338 °F)	55 °C (131 °F)	180 °C (356 °F)	60 °C (140 °F)	110 °C (230 °F)	50 °C (122 °F)	180 °C (356 °F)

Medium density

0 to 5 000 kg/m³ (0 to 312 lb/cf)

Pressure/temperature ratings

For an overview of the pressure/temperature ratings for the process connections, see the Technical Information

Sensor housing

The sensor housing is filled with dry nitrogen gas and protects the electronics and mechanics inside.

If a measuring tube fails (e.g. due to process characteristics like corrosive or abrasive fluids), the fluid will initially be contained by the sensor housing.

In the event of a tube failure, the pressure level inside the sensor housing will rise according to the operating process pressure. If the user judges that the sensor housing burst pressure does not provide an adequate safety margin, the device can be fitted with a rupture disk. This prevents excessively high pressure from forming inside the sensor housing. Therefore, the use of a rupture disk is strongly recommended in applications involving high gas pressures, and particularly in applications in which the process pressure is greater than 2/3 of the sensor housing burst pressure.

If there is a need to drain the leaking medium into a discharge device, the sensor should be fitted with a rupture disk. Connect the discharge to the additional threaded connection .

If the sensor is to be purged with gas (gas detection), it should be equipped with purge connections.

Do not open the purge connections unless the containment can be filled immediately with a dry, inert gas. Use only low pressure to purge.

Maximum pressure: 2 bar (29.0 psi)

Burst pressure of the sensor housing

The following sensor housing burst pressures are only valid for standard devices and/or devices equipped with closed purge connections (not opened/as delivered).

If a device fitted with purge connections (order code for "Sensor option", option CH "Purge connection") is connected to the purge system, the maximum pressure is determined by the purge system itself or by the device, depending on which component has the lower pressure classification.

If the device is fitted with a rupture disk (order code for "Sensor option", option CA "Rupture disk"), the rupture disk trigger pressure is decisive .

The sensor housing burst pressure refers to a typical internal pressure which is reached prior to mechanical failure of the sensor housing and which was determined during type testing. The corresponding type test declaration can be ordered with the device (order code for "Additional approval", option LN "Sensor housing burst pressure, type test").

DN		Sensor housing burst pressure	
[mm]	[in]	[bar]	[psi]
300	12	28	406
350	14	28	406
400	16	28	406

For information on the dimensions: see the "Mechanical construction" section of the "Technical Information" document

Rupture disk

To increase the level of safety, a device version with a rupture disk with a trigger pressure of 5.5 to 6.5 bar (80 to 94 psi) can be used (order code for "Sensor option", option CA "rupture disk").

For information on the dimensions of the rupture disk: see the "Mechanical construction" section of the "Technical Information" document

Flow limit

Select the nominal diameter by optimizing between the required flow range and permissible pressure loss.

For an overview of the full scale values for the measuring range, see the "Measuring range" section → 246

- The minimum recommended full scale value is approx. 1/20 of the maximum full scale value
- For the most common applications, 20 to 50 % of the maximum full scale value can be considered ideal
- A low full scale value must be selected for abrasive media (such as liquids with entrained solids): flow velocity < 1 m/s (< 3 ft/s).
- For gas measurement the following rules apply:
  - The flow velocity in the measuring tubes should not exceed half the speed of sound (0.5 Mach)
  - The maximum mass flow depends on the density of the gas: formula

To calculate the flow limit, use the *Applicator* sizing tool → 243

Pressure loss

To calculate the pressure loss, use the *Applicator* sizing tool → 243

System pressure

→ 23

16.10 Mechanical construction

Design, dimensions

For the dimensions and installed lengths of the device, see the "Technical Information" document, "Mechanical construction" section

Weight

All values (weight exclusive of packaging material) refer to devices with ASME B16.5 Class 150 flanges. Weight specifications including transmitter as per order code for "Housing", option A "Aluminum, coated".

Different values due to different transmitter versions:
- Transmitter version for the hazardous area
  (Order code for "Housing", option A "Aluminum, coated"; Ex d): +2 kg (+4.4 lbs)
- Cast transmitter version, stainless
  (Order code for "Housing", option L "Cast, stainless"): +6 kg (+13 lbs)

Weight in SI units

DN [mm]	Weight [kg]
300	553
350	577
400	601

Weight in US units

DN [in]	Weight [lbs]
12	1219
14	1272
16	1325

Materials

Transmitter housing

Order code for "Housing":
- Option **A** "Aluminum, coated": aluminum, AlSi10Mg, coated
- Option **L** "Cast, stainless": cast, stainless steel, 1.4409 (CF3M) similar to 316L

Window material

Order code for "Housing":
- Option **A** "Aluminum, coated": glass
- Option **L** "Cast, stainless": glass

Cable entries/cable glands

Order code for "Housing", option A "Aluminum, coated"

The various cable entries are suitable for hazardous and non-hazardous areas.

Cable entry/cable gland	Material
Gland M20 × 1.5	Non-Ex: plastic
	Z2, D2, Ex d/de: brass with plastic
Adapter for cable entry with internal thread G ½"	Nickel-plated brass
Adapter for cable entry with internal thread NPT ½"	

Order code for "Housing", option L "Cast, stainless"

The various cable entries are suitable for hazardous and non-hazardous areas.

Cable entry/cable gland	Material
Cable gland M20 × 1.5	Stainless steel, 1.4404 (316L)
Adapter for cable entry with internal thread G ½"	
Adapter for cable entry with internal thread NPT ½"	

Sensor housing

- Acid and alkali-resistant outer surface
- Stainless steel, 1.4404 (316L)

Measuring tubes

Stainless steel, 1.4404 (316/316L);
Manifold: stainless steel, 1.4404 (316/316L)

Process connections

Flanges in accordance with EN 1092-1 (DIN2501) / ASME B 16.5:
Stainless steel, 1.4404 (F316/F316L)

Available process connections → 265

Seals

Welded process connections without internal seals

Accessories

Protective cover

Stainless steel, 1.4404 (316L)

External WLAN antenna

- Antenna: ASA plastic (acrylonitrile styrene acrylate) and nickel-plated brass
- Adapter: Stainless steel and nickel-plated brass
- Cable: Polyethylene
- Plug: Nickel-plated brass
- Angle bracket: Stainless steel

Process connections	Fixed flange connections: ▪ EN 1092-1 (DIN 2501) flange ▪ EN 1092-1 (DIN 2512N) flange ▪ ASME B16.5 flange Process connection materials → 264
Surface roughness	All data relate to parts in contact with medium. The following surface roughness categories can be ordered: Not polished

16.11 User interface

Languages	Can be operated in the following languages: ▪ Via local operation English, German, French, Spanish, Italian, Dutch, Portuguese, Polish, Russian, Turkish, Chinese, Japanese, Korean, Vietnamese, Czech, Swedish ▪ Via web browser English, German, French, Spanish, Italian, Dutch, Portuguese, Polish, Russian, Turkish, Chinese, Japanese, Vietnamese, Czech, Swedish ▪ Via "FieldCare", "DeviceCare" operating tool: English, German, French, Spanish, Italian, Chinese, Japanese
Local operation	**Via display module** Equipment level: ▪ Order code for "Display; operation", option F "4-line, illuminated, graphic display; touch control"' ▪ Order code for "Display; operation", option G "4-line, illuminated, graphic display; touch control + WLAN" Information about WLAN interface → 71

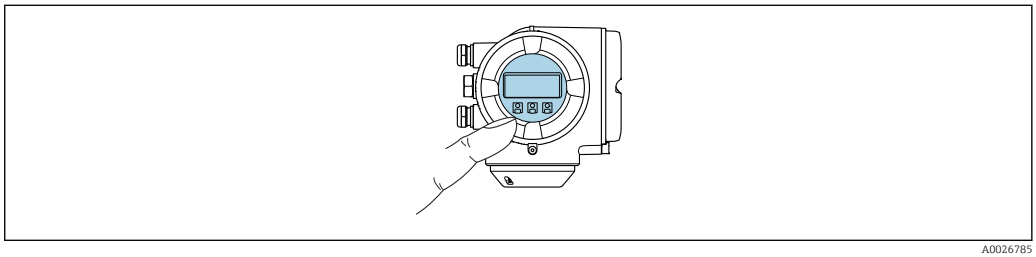

A0026785

36 *Operation with touch control*

Display elements

- 4-line, illuminated, graphic display
- White background lighting; switches to red in event of device errors
- Format for displaying measured variables and status variables can be individually configured

Operating elements

- External operation via touch control (3 optical keys) without opening the housing: ⊞, ⊟, E
- Operating elements also accessible in the various zones of the hazardous area

Via remote display and operating module DKX001

The remote display and operating module DKX001 is available as an optional extra → 242..

- The measuring instrument is always supplied with a dummy cover when the remote display and operating module DKX001 is ordered directly with the measuring instrument. Display or operation at the transmitter is not possible in this case.
- If ordered subsequently, the remote display and operating module DKX001 may not be connected at the same time as the existing measuring instrument display module. Only one display or operation unit may be connected to the transmitter at any one time.

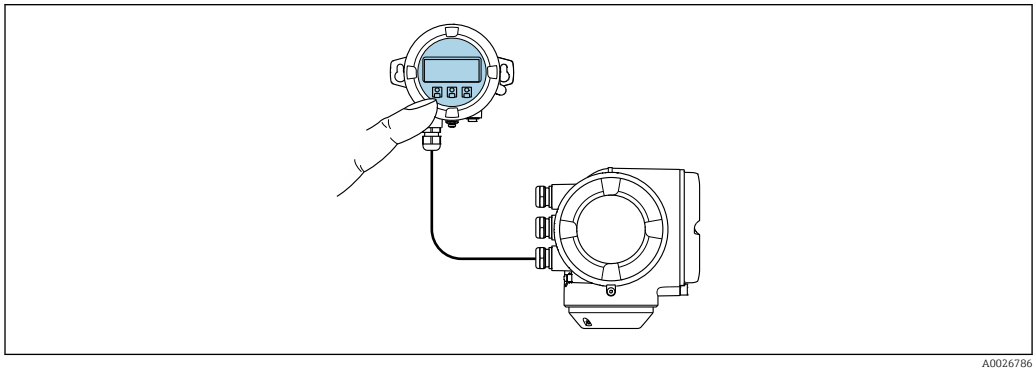

37 Operation via remote display and operating module DKX001

Display and operating elements

The display and operating elements correspond to those of the display module → 265.

Housing material

The housing material of the display and operating module DKX001 depends on the choice of transmitter housing material.

Transmitter housing		Remote display and operating module
Order code for "Housing"	**Material**	**Material**
Option **A** "Aluminum, coated"	AlSi10Mg, coated	AlSi10Mg, coated
Option **L** "Cast, stainless"	Cast stainless steel, 1.4409 (CF3M) similar to 316L	1.4409 (CF3M)

Cable entry

Corresponds to the choice of transmitter housing, order code for "Electrical connection".

Connecting cable

→ 32

Dimensions

Information on the dimensions:

"Mechanical construction" section of the "Technical Information" document.

Remote operation	→ 69
Service interface	→ 70

Supported operating tools

Different operating tools can be used for local or remote access to the measuring device. Depending on the operating tool used, access is possible with different operating units and via a variety of interfaces.

Supported operating tools	Operating unit	Interface	Additional information
Web browser	Notebook, PC or tablet with web browser	▪ Service interface CDI-RJ45 ▪ WLAN interface ▪ Ethernet-based fieldbus (EtherNet/IP, PROFINET, Modbus TCP over Ethernet-APL)	Special Documentation for device → 🗎 275
DeviceCare SFE100	Notebook, PC or tablet with Microsoft Windows system	▪ Service interface CDI-RJ45 ▪ WLAN interface ▪ Fieldbus protocol	→ 🗎 243
FieldCare SFE500	Notebook, PC or tablet with Microsoft Windows system	▪ Service interface CDI-RJ45 ▪ WLAN interface ▪ Fieldbus protocol	→ 🗎 243
Field Xpert	SMT70/77/50	▪ All fieldbus protocols ▪ WLAN interface ▪ Bluetooth ▪ Service interface CDI-RJ45	Operating Instructions BA01202S Device description files: Use update function of handheld terminal

Other operating tools based on FDT technology with a device driver such as DTM/iDTM or DD/EDD can be used for device operation. These operating tools are available from the individual manufacturers. Integration into the following operating tools, among others, is supported:

- Emersons TREX → www.emerson.com
- Field Device Manager (FDM) from Honeywell → www.process.honeywell.com
- FieldMate from Yokogawa → www.yokogawa.com
- PACTWare → www.pactware.com

The related device description files are available: www.endress.com → Download Area

Web server

The integrated web server can be used to operate and configure the device via a web browser via service interface (CDI-RJ45) or via WLAN interface . The structure of the operating menu is the same as for the local display. In addition to the measured values, status information on the device is displayed and can be used to monitor device health. Furthermore the device data can be managed and the network parameters can be configured.

A device that has a WLAN interface (can be ordered as an option) is required for the WLAN connection: order code for "Display; Operation", option G "4-line, illuminated; touch control + WLAN". The device acts as an Access Point and enables communication by computer or a mobile handheld terminal.

Supported functions
Data exchange between the operating unit (such as a notebook, for example,) and measuring instrument:
- Upload the configuration from the measuring instrument (XML format, configuration backup)
- Save the configuration to the measuring instrument (XML format, restore configuration)
- Export event list (.csv file)

- Export parameter settings (.csv file or PDF file, document the measuring point configuration)
- Export the Heartbeat Technology verification report (PDF file, only available with the **Heartbeat Verification** → 📄 272 application package)
- Flash firmware version for device firmware upgrade, for example
- Download driver for system integration
- Visualize up to 1000 saved measured values (only available with the **Extended HistoROM** application package→ 📄 272)

HistoROM data management

The measuring instrument features HistoROM data management. HistoROM data management comprises both the storage and import/export of key device and process data, making operation and servicing far more reliable, secure and efficient.

When the device is delivered, the factory settings of the configuration data are stored as a backup in the device memory. This memory can be overwritten with an updated data record, for example after commissioning.

Additional information on the data storage concept

There are different types of data storage units in which device data are stored and used by the device:

	HistoROM backup	T-DAT	S-DAT
Available data	▪ Event logbook, e.g. diagnostic events ▪ Parameter data record backup ▪ Device firmware package ▪ Driver for system integration for exporting via web server, e.g.: GSD for PROFINET	▪ Measured value logging ("Extended HistoROM" order option) ▪ Current parameter data record (used by firmware at run time) ▪ Indicator (minimum/maximum values) ▪ Totalizer value	▪ Sensor data: e.g. nominal diameter ▪ Serial number ▪ Calibration data ▪ Device configuration (e.g. SW options, fixed I/O or multi I/O)
Storage location	Fixed on the user interface PC board in the connection compartment	Can be plugged into the user interface PC board in the connection compartment	In the sensor plug in the transmitter neck part

Data backup

Automatic

- The most important device data (sensor and transmitter) are automatically saved in the DAT modules
- If the transmitter or measuring device is replaced: once the T-DAT containing the previous device data has been exchanged, the new measuring device is ready for operation again immediately without any errors
- If exchanging the electronics module (e.g. I/O electronics module): Once the electronics module has been replaced, the software of the module is compared against the current device firmware. The module software is upgraded or downgraded where necessary. The electronics module is available for use immediately afterwards and no compatibility problems occur.

Manual

Additional parameter data record (complete parameter settings) in the integrated device memory HistoROM backup for:

- Data backup function
  Backup and subsequent restoration of a device configuration in the device memory HistoROM backup
- Data comparison function
  Comparison of the current device configuration with the device configuration saved in the device memory HistoROM backup

Data transmission

Manual
- Transfer of a device configuration to another device using the export function of the specific operating tool, e.g. with FieldCare, DeviceCare or web server: to duplicate the configuration or to store in an archive (e.g. for backup purposes)
- Transmission of the drivers for system integration via web server, e.g.:
  GSD for PROFINET

Event list

Automatic
- Chronological display of up to 20 event messages in the events list
- If the **Extended HistoROM** application package (order option) is enabled: up to 100 event messages are displayed in the events list along with a time stamp, plain text description and remedial measures
- The events list can be exported and displayed via a variety of interfaces and operating tools e.g. DeviceCare, FieldCare or Web server

Data logging

Manual
If the **Extended HistoROM** application package (order option) is enabled:
- Recording of 1 to 4 channels of up to 1 000 measured values (up to 250 measured values per channel)
- User configurable recording interval
- Export the measured value log via a variety of interfaces and operating tools e.g. FieldCare, DeviceCare or web server

16.12 Certificates and approvals

Current certificates and approvals for the product are available at www.endress.com on the relevant product page:

1. Select the product using the filters and search field.
2. Open the product page.
3. Select **Downloads**.

CE mark	The device meets the legal requirements of the applicable EU Directives. These are listed in the corresponding EU Declaration of Conformity along with the standards applied. Endress+Hauser confirms successful testing of the device by affixing to it the CE mark.
UKCA marking	The device meets the legal requirements of the applicable UK regulations (Statutory Instruments). These are listed in the UKCA Declaration of Conformity along with the designated standards. By selecting the order option for UKCA marking, Endress+Hauser confirms a successful evaluation and testing of the device by affixing the UKCA mark. Contact address Endress+Hauser UK: Endress+Hauser Ltd. Floats Road Manchester M23 9NF United Kingdom www.uk.endress.com

Certification PROFINET	**PROFINET interface**
	The measuring instrument is certified and registered by the PROFIBUS Nutzerorganisation e.V. (PNO). The measuring system meets all the requirements of the following specifications:
	▪ Certified according to:
	  ▪ Test specification for PROFINET devices
	  ▪ PROFINET Netload Class 2 100 Mbit/s
	▪ The device can also be operated with certified devices of other manufacturers (interoperability).
	▪ The device supports PROFINET S2 system redundancy.

Pressure Equipment Directive	▪ With the marking
	  a) PED/G1/x (x = category) or
	  b) PESR/G1/x (x = category)
	  on the sensor nameplate, Endress+Hauser confirms compliance with the "Essential Safety Requirements"
	  a) specified in Annex I of the Pressure Equipment Directive 2014/68/EU or
	  b) Schedule 2 of Statutory Instruments 2016 No. 1105.
	▪ Devices not bearing this marking (without PED or PESR) are designed and manufactured according to sound engineering practice. They meet the requirements of
	  a) Art. 4, Section 3 of the Pressure Equipment Directive 2014/68/EU or
	  b) Part 1, Section 8 of Statutory Instruments 2016 No. 1105.
	  The scope of application is indicated
	  a) in diagrams 6 to 9 in Annex II of the Pressure Equipment Directive 2014/68/EU or
	  b) in Schedule 3, Section 2 of Statutory Instruments 2016 No. 1105.

Radio approval	The measuring instrument has radio approval. For detailed information on the radio approval, see the Special Documentation → 📄 275

Additional certification	**Marine approval**
	Currently valid certificates are available:
	▪ In the Downloads area of the Endress+Hauser website: www.endress.com → Downloads
	▪ Specify the following details:
	  ▪ Product root, e.g. 8E3B
	  ▪ Search: Approval & Certificates → Marine
	
	CRN approval
	Some device versions have CRN approval. A CRN-approved process connection with a CSA approval must be ordered for a CRN-approved device.
	
	Tests and certificates
	▪ ISO 23277 ZG2x (PT) + ISO 10675-1 ZG1 (RT) measuring tube (PT) + process connection (RT) welded seam, test report
	▪ Penetrant+Radiographic testing ASME B31.3 NFS (RT) measuring tube (PT) + process connection (RT) welded seam, test report
	▪ Penetrant+Radiographic testing ASME VIII Div.1(RT) measuring tube (PT) + process connection (RT) welded seam, test report
	▪ Visual+Penetrant+Radiographic testing NORSOK M-601 (RT) measuring tube (VT+PT) + process connection. (VT + RT) welded seam, test report

- EN10204-3.1 material certificate, wetted parts
- Pressure test, internal process, test report (order code for "Test, certificate", option JB)
- Material identification check (PMI), internal procedure, wetted parts, test report (option JK)

Testing of welded connections

Option	Test standard				Component	
	ISO 23277 AL2x (PT) ISO 10675-1 AL1 (RT, DR)	ASME B31.3 NFS	ASME VIII Div.1 Appx. 4+8	NORSOK M-601	Measuring tube	Test procedure
KF	x				PT	RT
KK		x			PT	RT
KP			x		PT	RT
KR				x	VT, PT	VT, RT
PT = penetrant testing, RT = radiographic testing, VT = visual testing All options with test report						

External standards and guidelines

- EN 60529
  Degrees of protection provided by enclosure (IP code)
- IEC/EN 60068-2-6
  Environmental influences: Test procedure - Test Fc: vibrate (sinusoidal).
- IEC/EN 60068-2-31
  Environmental influences: Test procedure - Test Ec: shocks due to rough handling, primarily for devices.
- EN 61010-1
  Safety requirements for electrical equipment for measurement, control and laboratory use - general requirements
- GB 30439.5
  Safety requirements for industrial automation products - Part 5: Flowmeter safety requirements
- EN 61326-1/-2-3
  EMC requirements for electrical equipment for measurement, control and laboratory use
- NAMUR NE 21
  Electromagnetic compatibility (EMC) of industrial process and laboratory control equipment
- NAMUR NE 32
  Data retention in the event of a power failure in field and control instruments with microprocessors
- NAMUR NE 43
  Standardization of the signal level for the breakdown information of digital transmitters with analog output signal.
- NAMUR NE 53
  Software of field devices and signal-processing devices with digital electronics
- NAMUR NE 80
  The application of the pressure equipment directive to process control devices
- NAMUR NE 105
  Specifications for integrating fieldbus devices in engineering tools for field devices
- NAMUR NE 107
  Self-monitoring and diagnostics of field devices
- NAMUR NE 131
  Requirements for field devices for standard applications
- NAMUR NE 132
  Coriolis mass meter
- NACE MR0103
  Materials resistant to sulfide stress cracking in corrosive petroleum refining environments.

- NACE MR0175/ISO 15156-1
  Materials for use in H2S-containing Environments in Oil and Gas Production.
- ETSI EN 300 328
  Guidelines for 2.4 GHz radio components.
- EN 301489
  Electromagnetic compatibility and radio spectrum matters (ERM).

16.13 Application packages

Many different application packages are available to enhance the functionality of the device. Such packages might be needed to address safety aspects or specific application requirements.

The application packages can be ordered with the device or subsequently from Endress+Hauser. Detailed information on the order code in question is available from your local Endress+Hauser sales center or on the product page of the Endress+Hauser website: www.endress.com.

Detailed information on the application packages:
Special Documentation → 📄 274

Diagnostic functionality	Order code for "Application package", option EA "Extended HistoROM" Comprises extended functions concerning the event log and the activation of the measured value memory. Event log: Memory volume is extended from 20 message entries (standard version) to up to 100 entries. Data logging (line recorder): ▪ Memory capacity for up to 1000 measured values is activated. ▪ 250 measured values can be output via each of the 4 memory channels. The recording interval can be defined and configured by the user. ▪ Measured value logs can be accessed via the local display or operating tool e.g. FieldCare, DeviceCare or Web server. For detailed information, see the Operating Instructions for the device.
Heartbeat Technology	Order code for "Application package", option EB "Heartbeat Verification + Monitoring" **Heartbeat Verification** Meets the requirement for traceable verification in accordance with DIN ISO 9001:2015 Clause 7.6 a) "Control of monitoring and measuring equipment". ▪ Functional testing in the installed state without interrupting the process. ▪ Traceable verification results on request, including a report. ▪ Simple testing process via local operation or other operating interfaces. ▪ Clear measuring point assessment (pass/fail) with high total test coverage within the framework of manufacturer specifications. ▪ Extension of calibration intervals according to operator's risk evaluation.

Heartbeat Monitoring
Continuously supplies data, which are characteristic of the measuring principle, to an external condition monitoring system for the purpose of preventive maintenance or process analysis. These data enable the operator to:
- Draw conclusions - using these data and other information - about the impact the process influences (e.g. corrosion, abrasion, deposit buildup etc.) have on measuring performance over time.
- Schedule servicing in time.
- Monitor the process or product quality, e.g. gas pockets.

Detailed information on Heartbeat Technology:
Special Documentation → 📄 274

Concentration measurement	Order code for "Application package", option ED "Concentration" Calculation and outputting of fluid concentrations. The measured density is converted to the concentration of a substance of a binary mixture using the "Concentration" application package: ▪ Choice of predefined fluids (e.g. various sugar solutions, acids, alkalis, salts, ethanol etc.). ▪ Common or user-defined units (°Brix, °Plato, % mass, % volume, mol/l etc.) for standard applications. ▪ Concentration calculation from user-defined tables. For detailed information, see the Special Documentation for the device.
Extended density	Order code for "Application package", option E1 "Extended density" For volume-based applications, the device can calculate and output a volume flow rate by dividing the mass flow rate by the measured density. This application package is the standard calibration for custody transfer applications according to national and international standards (e.g. OIML, MID). It is recommended for volume-based fiscal dosing applications over a wide temperature range. The calibration certificate supplied describes the density performance in air and water at various temperatures in detail. For detailed information, see the Operating Instructions for the device.
Petroleum	Order code for "Application package", option EJ "Petroleum" The most important parameters for the Oil & Gas Industry can be calculated and displayed with this application package. ▪ Corrected volume flow and calculated reference density in accordance with the "API Manual of Petroleum Measurement Standards, Chapter 11.1" ▪ Water content, based on density measurement ▪ Weighted mean of the density and temperature For detailed information, see the Special Documentation for the device.
Petroleum & locking function	Order code for "Application package", option EM "Petroleum & locking function" The most important parameters for the Oil & Gas Industry can be calculated and displayed with this application package. It is also possible to lock the settings.

- Corrected volume flow and calculated reference density in accordance with the "API Manual of Petroleum Measurement Standards, Chapter 11.1"
- Water content, based on density measurement
- Weighted mean of the density and temperature

For detailed information, see the Special Documentation for the device.

16.14 Accessories

Overview of accessories available to order → 242

16.15 Documentation

For an overview of the scope of the associated Technical Documentation, refer to the following:
- *Device Viewer* (www.endress.com/deviceviewer): Enter the serial number from the nameplate
- *Endress+Hauser Operations app*: Enter serial number from nameplate or scan matrix code on nameplate.

Standard documentation

Brief Operating Instructions

Brief Operating Instructions for the sensor

Measuring instrument	Documentation code
Proline Promass X	KA01288D

Brief operating instructions for transmitter

Measuring instrument	Documentation code
Proline 300	KA01341D

Technical Information

Measuring device	Documentation code
Promass X 300	TI01279D

Description of Device Parameters

Measuring instrument	Documentation code
Promass 300	GP01115D

Device-dependent additional documentation

Safety instructions

Safety instructions for electrical equipment for hazardous areas.

Contents	Documentation code
ATEX/IECEx Ex d	XA01405D
ATEX/IECEx Ex ec	XA01439D
cCSAus XP	XA01373D
cCSAus Ex d	XA01372D

Contents	Documentation code
cCSAus Ex ec	XA01507D
EAC Ex d	XA01656D
EAC Ex ec	XA01657D
JPN Ex d	XA01778D
KCs Ex d	XA03285D
INMETRO Ex d	XA01468D
INMETRO Ex ec	XA01470D
NEPSI Ex d	XA01469D
NEPSI Ex ec	XA01471D
UKEX Ex d	XA02566D
UKEX Ex ec	XA02568D

Remote display and operating module DKX001

Contents	Documentation code
ATEX/IECEx Ex i	XA01494D
ATEX/IECEx Ex ec	XA01498D
cCSAus IS	XA01499D
cCSAus Ex nA	XA01513D
EAC Ex i	XA01664D
EAC Ex ec	XA01665D
INMETRO Ex i	XA01500D
INMETRO Ex ec	XA01501D
JPN	XA01781D
KCs Ex i	XA03280D
NEPSI Ex i	XA01502D
NEPSI Ex nA	XA01503D
UKCA Ex i	XA01494D
UKCA Ex ec	XA01498D

Special Documentation

Contents	Documentation code
Information on the Pressure Equipment Directive	SD01614D
Remote display and operating module DKX001	SD01763D
Radio approvals for WLAN interface for A309/A310 display module	SD01793D
Web server	SD01969D
Heartbeat Technology	SD01988D
Concentration measurement	SD02005D
Petroleum	SD02099D
Gas fraction handler	SD02584D

Installation Instructions

Contents	Note
Installation instructions for spare part sets and accessories	▪ Access the overview of all the available spare part sets via *Device Viewer* → 🗎 240 ▪ Accessories available for order with Installation Instructions → 🗎 242

Index

A

Access authorization to parameters
- Read access . . . 60
- Write access . . . 60

Access code . . . 60
- Incorrect input . . . 60

Adapting the diagnostic behavior . . . 179
Additional certification . . . 270
Ambient conditions
- Mechanical load . . . 260
- Operating height . . . 259
- Relative humidity . . . 259
- Storage temperature . . . 259
- Vibration resistance and shock resistance . . . 260

Ambient temperature
- Influence . . . 257

Ambient temperature range . . . 259
Application . . . 245
Application packages . . . 272
Applicator . . . 246
Approvals . . . 269

C

Cable entries
- Technical data . . . 255

Cable entry
- Degree of protection . . . 45

CE mark . . . 10, 269
Certificates . . . 269
Certification PROFINET . . . 270
Check
- Connection . . . 46
- Received goods . . . 15

Checklist
- Post-connection check . . . 46
- Post-installation check . . . 30

Climate class . . . 259
Commissioning . . . 89
- Advanced settings . . . 123
- Configuring the device . . . 90

Connecting the device . . . 35
Connecting the signal cables . . . 35
Connecting the supply voltage cables . . . 35
Connection
- see Electrical connection

Connection cable . . . 31, 32
Connection preparations . . . 35
Connection tools . . . 31
Context menu
- Calling up . . . 56
- Closing . . . 56
- Explanation . . . 56

Current consumption . . . 254
Cyclic data transmission . . . 76

D

Declaration of Conformity . . . 10
Defining the access code . . . 144
Degree of protection . . . 45, 260
Design fundamentals
- Measurement error . . . 258
- Repeatability . . . 258

Device
- Configuring . . . 90
- Preparing for electrical connection . . . 35

Device components . . . 14
Device description files . . . 74
Device locking, status . . . 147
Device master file
- GSD . . . 74

Device name
- Sensor . . . 17
- Transmitter . . . 16

Device repair . . . 240
Device revision . . . 74
Device type ID . . . 74
Device Viewer . . . 240
DeviceCare . . . 73
- Device description file . . . 74

Diagnostic behavior
- Explanation . . . 175
- Symbols . . . 175

Diagnostic information
- Design, description . . . 175, 178
- DeviceCare . . . 177
- FieldCare . . . 177
- LED . . . 172
- Local display . . . 174
- Overview . . . 182
- Remedial measures . . . 182
- Web browser . . . 176

Diagnostic list . . . 233
Diagnostic message . . . 174
Diagnostics
- Symbols . . . 174

DIP switch
- see Write protection switch

Direct access . . . 58
Disabling write protection . . . 143
Display
- see Local display

Display and operating module DKX001 . . . 266
Display area
- For operational display . . . 51
- In the navigation view . . . 52

Display values
- For locking status . . . 147

Displaying the measured value history . . . 163
Disposal . . . 241
Document
- Function . . . 6

Symbols . . . 6
Document function . . . 6
Documentation . . . 274
Down pipe . . . 21

E
Editing view . . . 54
Input screen . . . 55
Using operating elements . . . 54, 55
Electrical connection
Degree of protection . . . 45
Measuring instrument . . . 31
Operating tools
Via PROFINET network . . . 69
Via service interface (CDI-RJ45) . . . 70
Via WLAN interface . . . 71
RSLogix 5000 . . . 69
Web server . . . 70
WLAN interface . . . 71
Electromagnetic compatibility . . . 260
Electronics module . . . 14
Enabling write protection . . . 143
Enabling/disabling the keypad lock . . . 61
Error messages
see Diagnostic messages
Event logbook . . . 234
Extended order code
Sensor . . . 17
Transmitter . . . 16

F
Field of application
Residual risks . . . 10
FieldCare . . . 72
Device description file . . . 74
Function . . . 72
Filtering the event logbook . . . 235
Firmware
Release date . . . 74
Version . . . 74
Firmware history . . . 238
Flow direction . . . 22, 28
Flow limit . . . 262
Functions
see Parameter

G
Galvanic isolation . . . 253
Gas Fraction Handler . . . 166

H
Hardware write protection . . . 145
Help text
Calling up . . . 59
Closing . . . 59
Explanation . . . 59
HistoROM . . . 138

I
Identifying the measuring instrument . . . 15
Incoming acceptance . . . 15
Indication
Current diagnostic event . . . 233
Previous diagnostic event . . . 233
Influence
Ambient temperature . . . 257
Medium pressure . . . 258
Medium temperature . . . 257
Information about this document . . . 6
Initializing the measuring instrument . . . 90
Inlet runs . . . 23
Input variables . . . 246
Inspection
Installation . . . 30
Installation . . . 21
Installation dimensions . . . 23
Installation requirements
Down pipe . . . 21
Inlet and outlet runs . . . 23
Installation dimensions . . . 23
Mounting location . . . 21
Orientation . . . 22
Rupture disk . . . 25
Sensor heating . . . 24
Thermal insulation . . . 24
Vibrations . . . 25
Intended use . . . 9

L
Languages, operation options . . . 265
Line recorder . . . 163
Local display . . . 265
Navigation view . . . 52
see Diagnostic message
see In alarm condition
see Operational display
Text editor . . . 54
Low flow cut off . . . 253

M
Main electronics module . . . 14
Maintenance work . . . 239
Managing the device configuration . . . 138
Manufacturer ID . . . 74
Manufacturing date . . . 16, 17
Materials . . . 263
Maximum measurement error . . . 255
Measured variables
see Process variables
Measurement accuracy . . . 255
Measuring and test equipment . . . 239
Measuring device
Conversion . . . 240
Repairs . . . 240
Structure . . . 14
Measuring instrument
Disposal . . . 241
Installing the sensor . . . 28
Preparing for mounting . . . 28

Removing . . . 241
Switch on . . . 89
Measuring principle . . . 245
Measuring range
For gases . . . 246
For liquids . . . 246
Measuring range, recommended . . . 262
Measuring system . . . 245
Mechanical load . . . 260
Medium density . . . 261
Medium pressure
Influence . . . 258
Medium temperature
Influence . . . 257
Menu
Diagnostics . . . 233
Setup . . . 92
Menus
For device configuration . . . 90
For specific settings . . . 123
Module
Totalizer
Totalizer Control . . . 80
Mounting dimensions
see Installation dimensions
Mounting location . . . 21
Mounting preparations . . . 28
Mounting requirements
Static pressure . . . 23
Mounting tool . . . 27

N

Nameplate
Sensor . . . 17
Transmitter . . . 16
Navigation path (navigation view) . . . 52
Navigation view
In the submenu . . . 52
In the wizard . . . 52
Netilion . . . 239
Numeric editor . . . 54

O

Onsite display
Numeric editor . . . 54
Operable flow range . . . 247
Operating elements . . . 56, 175
Operating height . . . 259
Operating keys
see Operating elements
Operating menu
Menus, submenus . . . 48
Structure . . . 48
Submenus and user roles . . . 49
Operating philosophy . . . 49
Operation . . . 147
Operation options . . . 47
Operational display . . . 50
Operational safety . . . 10
Order code . . . 16, 17
Orientation (vertical, horizontal) . . . 22
Outlet runs . . . 23
Output signal . . . 249
Output variables . . . 249

P

Packaging disposal . . . 20
Parameter
Changing . . . 59
Entering values or text . . . 59
Parameter settings
Administration (Submenu) . . . 140
Advanced setup (Submenu) . . . 124
Communication (Submenu) . . . 92
Configuration backup (Submenu) . . . 138
Corrected volume flow calculation (Submenu) . . . 125
Current input . . . 99
Current input (Wizard) . . . 99
Current input 1 to n (Submenu) . . . 159
Current output . . . 101
Current output (Wizard) . . . 101
Data logging (Submenu) . . . 163
Define access code (Wizard) . . . 140
Device information (Submenu) . . . 237
Diagnostics (Menu) . . . 233
Display (Submenu) . . . 131
Display (Wizard) . . . 117
Disposable component (Submenu) . . . 90
I/O configuration . . . 98
I/O configuration (Submenu) . . . 98
Low flow cut off (Wizard) . . . 121
Measured variables (Submenu) . . . 148
Measurement mode (Submenu) . . . 167
Medium index (Submenu) . . . 168
Medium selection (Wizard) . . . 96
Partially filled pipe detection (Wizard) . . . 122
Pulse/frequency/switch output . . . 105
Pulse/frequency/switch output (Wizard) . . . 105, 107, 111
Pulse/frequency/switch output 1 to n (Submenu) 160
Relay output . . . 114
Relay output 1 to n (Submenu) . . . 161
Relay output 1 to n (Wizard) . . . 114
Reset access code (Submenu) . . . 140
Sensor adjustment (Submenu) . . . 126
Setup (Menu) . . . 92
Simulation (Submenu) . . . 141
Status input . . . 101
Status input 1 to n (Submenu) . . . 159
Status input 1 to n (Wizard) . . . 101
System units (Submenu) . . . 93
Totalizer (Submenu) . . . 158
Totalizer 1 to n (Submenu) . . . 129
Totalizer handling (Submenu) . . . 162
Value current output 1 to n (Submenu) . . . 160
Volume flow (Submenu) . . . 98
Web server (Submenu) . . . 67
WLAN settings (Wizard) . . . 135

Zero adjustment (Wizard) . . . 128
Zero verification (Wizard) . . . 127
Performance characteristics . . . 255
Post-connection check . . . 89
Post-connection check (checklist) . . . 46
Post-installation check . . . 89
Post-installation check (checklist) . . . 30
Potential equalization . . . 40
Power consumption . . . 254
Power supply failure . . . 254
Pressure Equipment Directive . . . 270
Pressure loss . . . 263
Pressure/temperature ratings . . . 261
Process connections . . . 265
Process variables
Calculated . . . 246
Measured . . . 246
Product safety . . . 10
Protecting parameter settings . . . 143

R

Radio approval . . . 270
Read access . . . 60
Reading off measured values . . . 147
Recalibration . . . 239
Reference operating conditions . . . 255
Registered trademarks . . . 8
Remedial actions
Calling up . . . 176
Closing . . . 176
Remote operation . . . 266
Repair . . . 240
Notes . . . 240
Repair of a device . . . 240
Repeatability . . . 257
Replacement
Device components . . . 240
Requirements for personnel . . . 9
Response time . . . 257
Return . . . 240
Rupture disk
Safety instructions . . . 25
Triggering pressure . . . 262

S

Safety . . . 9
Sensor
Installing . . . 28
Sensor heating . . . 24
Sensor housing . . . 261
Serial number . . . 16, 17
Services
Maintenance . . . 239
Repair . . . 240
Setting the operating language . . . 89
Settings
Adapting the measuring device to the process conditions . . . 162
Administration . . . 139
Advanced display configurations . . . 131
Analog Input . . . 98
Communication interface . . . 92
Current input . . . 99
Current output . . . 101
I/O configuration . . . 98
Initializing the measuring instrument . . . 90
Local display . . . 117
Low flow cut off . . . 121
Managing the device configuration . . . 138
Medium . . . 96
Operating language . . . 89
Partially filled pipe detection . . . 122
Pulse output . . . 105
Pulse/frequency/switch output . . . 105, 107
Relay output . . . 114
Resetting the device . . . 236
Resetting the totalizer . . . 162
Sensor adjustment . . . 126
Simulation . . . 141
Status input . . . 101
Switch output . . . 111
System units . . . 93
Tag name . . . 92
Totalizer . . . 129
Totalizer reset . . . 162
WLAN . . . 135
Signal on alarm . . . 251
Software release . . . 74
Spare part . . . 240
Spare parts . . . 240
Special connection instructions . . . 41
Special mounting instructions
Hygienic compatibility . . . 25
Standards and guidelines . . . 271
Static pressure . . . 23
Status area
For operational display . . . 50
In the navigation view . . . 52
Status signals . . . 174, 177
Storage concept . . . 268
Storage conditions . . . 19
Storage temperature . . . 19
Storage temperature range . . . 259
Structure
Measuring device . . . 14
Operating menu . . . 48
Submenu
Administration . . . 139, 140
Advanced setup . . . 123, 124
Analog inputs . . . 98
Calculated values . . . 124
Communication . . . 92
Concentration . . . 137
Configuration backup . . . 138
Corrected volume flow calculation . . . 125
Current input 1 to n . . . 159
Data logging . . . 163
Device information . . . 237

Display . . . 131
Disposable component . . . 90
Event logbook . . . 234
Heartbeat setup . . . 138
I/O configuration . . . 98
Input values . . . 158
Measured values . . . 147
Measured variables . . . 148
Measurement mode . . . 167
Medium index . . . 168
Output values . . . 160
Overview . . . 49
Petroleum . . . 137
Process variables . . . 124
Pulse/frequency/switch output 1 to n . . . 160
Relay output 1 to n . . . 161
Reset access code . . . 140
Sensor adjustment . . . 126
Simulation . . . 141
Status input 1 to n . . . 159
System units . . . 93
Totalizer . . . 158
Totalizer 1 to n . . . 129
Totalizer handling . . . 162
Value current output 1 to n . . . 160
Viscosity . . . 137
Volume flow . . . 98
Web server . . . 67
Supply voltage . . . 254
Surface roughness . . . 265
Switch output . . . 251
Symbols
Controlling data entries . . . 55
For communication . . . 50
For diagnostic behavior . . . 50
For locking . . . 50
For measured variable . . . 51
For measurement channel number . . . 51
For menus . . . 52
For parameters . . . 52
For status signal . . . 50
For submenu . . . 52
For wizards . . . 52
In the status area of the local display . . . 50
Input screen . . . 55
Operating elements . . . 54
System design
Measuring system . . . 245
see Measuring device design
System integration . . . 74
System redundancy S2 . . . 88

T

Technical data, overview . . . 245
Temperature range
Ambient temperature for display . . . 265
Medium temperature . . . 260
Storage temperature . . . 19
Terminal assignment . . . 34
Terminals . . . 255
Tests and certificates . . . 270
Text editor . . . 54
Thermal insulation . . . 24
Tool
For mounting . . . 27
Transportation . . . 19
Tool tip
see Help text
Tools
Electrical connection . . . 31
Totalizer
Assign process variable . . . 158
Configuring . . . 129
Totalizer Control module . . . 80
Transmitter
Turning the display module . . . 29
Turning the housing . . . 28
Transporting the measuring instrument . . . 19
Troubleshooting
General . . . 170
Turning the display module . . . 29
Turning the electronics housing
see Turning the transmitter housing
Turning the transmitter housing . . . 28

U

UKCA marking . . . 269
Use of measuring instrument
Borderline cases . . . 9
Incorrect use . . . 9
see Intended use
User roles . . . 49

V

Version data for the device . . . 74
Vibration resistance and shock resistance . . . 260
Vibrations . . . 25

W

W@M Device Viewer . . . 15
Weight
SI units . . . 263
Transport (notes) . . . 19
US units . . . 263
Wizard
Current input . . . 99
Current output . . . 101
Define access code . . . 140
Display . . . 117
Low flow cut off . . . 121
Medium selection . . . 96
Partially filled pipe detection . . . 122
Pulse/frequency/switch output . . . 105, 107, 111
Relay output 1 to n . . . 114
Status input 1 to n . . . 101
WLAN settings . . . 135
Zero adjustment . . . 128
Zero verification . . . 127

WLAN settings 135
Workplace safety 10
Write access 60
Write protection
    Via access code 144
    Via write protection switch 145
Write protection switch 145

71727658

www.addresses.endress.com

Endress+Hauser

People for Process Automation