TI01661F/00/EN/08.26-00
71783334
2026-09-11

Technical Information
Liquiphant FTL51B

Vibronic
HART,
PROFINET over Ethernet-APL

Level switch for liquids

Field of application

- Level switch for all liquids, for minimum or maximum detection in vessels, e.g. process tanks, storage tanks, and piping, even in hazardous areas
- Process temperature range: −50 to +150 °C (−58 to +302 °F)
- Pressures up to 100 bar (1 450 psi)
- Viscosities up to 10 000 mPa·s
- Ideal substitute for float switches; reliable function is not affected by flow, turbulence, air bubbles, foam, vibration, solids content or buildup

Benefits

- Approved for safety systems with functional safety requirements up to SIL 2/SIL 3 in accordance with IEC 61508 (in combination with HART)
- Functional safety: monitoring of the oscillation frequency of the vibrating fork
- Heartbeat Technology - verification and monitoring function on demand without interrupting the process
- With Bluetooth® wireless technology

Endress+Hauser
People for Process Automation

Table of contents

About this document . . . 4
Safety symbols . . . 4
Electrical symbols . . . 4
Symbols for certain types of Information . . . 4
Symbols in graphics . . . 4
Communication-specific symbols . . . 4
List of abbreviations . . . 4
Graphic conventions . . . 5

Function and system design . . . 5
Measuring principle . . . 5
Measuring system . . . 5
Communication and data processing . . . 5
Dependability . . . 5

Input . . . 6
Measured variable . . . 6
Measuring range . . . 6

Output . . . 6
Output signal . . . 6
Signal on alarm . . . 6
Load . . . 7
Damping . . . 7
Switch output . . . 7
Ex connection data . . . 7
Protocol-specific data . . . 7
HART data . . . 9
Heartbeat Technology . . . 9

Power supply . . . 10
Terminal assignment . . . 10
Available device plugs . . . 10
Supply voltage . . . 11
Electrical connection . . . 11
Potential equalization . . . 11
Terminals . . . 12
Cable entries . . . 12
Cable specification . . . 12
Overvoltage protection . . . 13

Performance characteristics . . . 13
Reference operating conditions . . . 13
Taking the switch point into consideration . . . 13
Maximum measurement error . . . 14
Resolution . . . 14
Reaction time . . . 14
Dynamic behavior, current output . . . 14
Dynamic behavior, digital output . . . 14
Hysteresis . . . 14
Non-repeatability . . . 14
Influence of the process temperature . . . 14
Influence of the process pressure . . . 14
Influence of the density of the process medium (at room temperature and normal pressure) . . . 15

Installation . . . 15
Mounting location, orientation . . . 15
Installation instructions . . . 16
Installing the device in piping . . . 18
Aligning the cable entry . . . 18
Special installation instructions . . . 19

Environment . . . 20
Ambient temperature range . . . 20
Storage temperature . . . 22
Humidity . . . 22
Operating height . . . 22
Climate class . . . 22
Degree of protection . . . 22
Vibration resistance . . . 22
Shock resistance . . . 23
Mechanical load . . . 23
Pollution degree . . . 23
Electromagnetic compatibility (EMC) . . . 23

Process . . . 23
Process temperature range . . . 23
Thermal shock . . . 23
Process pressure range . . . 23
Overpressure limit . . . 24
Medium density . . . 24
Viscosity . . . 24
Pressure tightness . . . 24
Solids contents . . . 24

Mechanical construction . . . 25
Design, dimensions . . . 25
Dimensions . . . 25
Weight . . . 36
Materials . . . 36
Surface roughness . . . 39

Operability . . . 39
Operation concept . . . 39
Languages . . . 39
Local operation . . . 40
Local display . . . 41
Remote operation . . . 42
Supported operating tools . . . 43
System integration . . . 43
HistoROM data management . . . 43

Certificates and approvals . . . 44
CE mark . . . 44
RCM marking . . . 44
Ex approval . . . 44
Corrosion test . . . 44
General material compliance . . . 44
Overfill protection system . . . 44
Functional safety . . . 44
Radio approval . . . 45
CRN approval . . . 45

Pressure equipment with permitted pressure less than 200 bar, no pressure-bearing volume 45
Process seal as per ANSI/ISA 12.27.01 45
EAC conformity 45
ASME B 31.3/31.1 45
HART certification 45
PROFINET over Ethernet-APL certification 45

Ordering information 46
Service 46
Test reports, declarations and inspection certificates 46
Test, certificate, declaration 46
TAG 47

Application packages 47
Heartbeat Technology 47
Heartbeat Diagnostics 47
Heartbeat Verification 48
Heartbeat Monitoring 48
Proof testing (HART) 48

Accessories 48
Device Viewer 48
Weather protection cover: 316L, XW112 48
Weather protection cover, plastic, XW111 49
Weld-in adapter 49
M12 socket 50
Sliding sleeves for unpressurized operation 50
High pressure sliding sleeves 51
Field Xpert SMT70 52
DeviceCare SFE100 52
FieldCare SFE500 52

Documentation 52
Standard documentation 53

Registered trademarks 53

About this document

Safety symbols

DANGER
This symbol alerts you to a dangerous situation. Failure to avoid this situation will result in serious or fatal injury.

WARNING
This symbol alerts you to a potentially dangerous situation. Failure to avoid this situation can result in serious or fatal injury.

CAUTION
This symbol alerts you to a potentially dangerous situation. Failure to avoid this situation can result in minor or medium injury.

NOTICE
This symbol alerts you to a potentially harmful situation. Failure to avoid this situation can result in damage to the product or something in its vicinity.

Electrical symbols

Ground connection
Grounded clamp, which is grounded via a grounding system.

Protective earth (PE)
Ground terminals, which must be grounded prior to establishing any other connections. The ground terminals are located on the inside and outside of the device.

Symbols for certain types of Information

Permitted
Procedures, processes or actions that are permitted.

Forbidden
Procedures, processes or actions that are forbidden.

Tip
Indicates additional information

Reference to documentation

Reference to another section

1., 2., 3. Series of steps

Symbols in graphics

A, B, C ... View

1, 2, 3 ... Item numbers

Hazardous area

Safe area (non-hazardous area)

Communication-specific symbols

Bluetooth® wireless technology
Wireless data transmission between devices over a short distance via radio technology.

List of abbreviations

PN
Nominal pressure

MWP
Maximum working pressure
The maximum working pressure is indicated on the nameplate.

DTM
Device Type Manager

Operating tool

The term "operating tool" is used in place of the following operating software:
- FieldCare/DeviceCare for operation via HART communication and PC
- SmartBlue app for operation using an Android or iOS smartphone or tablet

PLC
Programmable logic controller (PLC)

Graphic conventions

- Installation, explosion and electrical connection drawings are presented in simplified format
- Devices, assemblies, components and dimensional drawings are presented in reduced-line format
- Dimensional drawings are not to-scale representations; the dimensions indicated are rounded off to 2 decimal places
- Unless otherwise described, flanges are presented with sealing surface form EN 1091-1, B2; ASME B16.5, RF; JIS B2220, RF

Function and system design

Measuring principle

The sensor's vibrating fork vibrates at its natural frequency. As soon as the liquid covers the vibrating fork, the oscillation frequency decreases. The change in frequency causes the level switch to switch.

Point level measurement

Maximum or minimum detection for liquids in tanks or pipes in all industries. Suitable for leakage monitoring, pump dry-running protection or overfill prevention, for example.

Specific versions are suitable for use in hazardous areas.

The level switch differentiates between the "covered" and "not covered" conditions.

Depending on the MIN (minimum detection) or MAX (maximum detection) modes, there are two possibilities in each case: OK status and demand mode.

OK status
- In MIN mode, the vibrating fork is covered, e.g. pump dry-run protection
- In MAX mode, the vibrating fork is not covered, e.g. overfill protection

Demand mode
- In MIN mode, the vibrating fork is not covered, e.g. pump dry-run protection
- In MAX mode, the vibrating fork is covered, e.g. overfill protection system

Measuring system

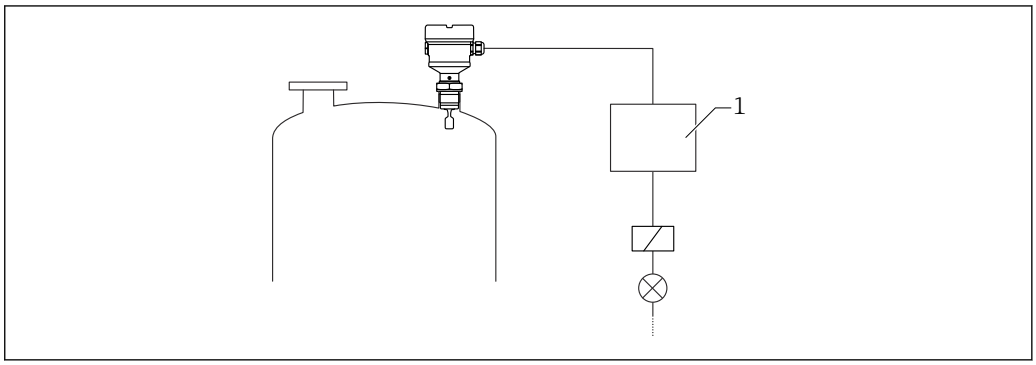

1 Example of a measuring system

1 Switching unit, PLC etc.

Communication and data processing

- 4 to 20 mA with HART communication protocol
- PROFINET over Ethernet-APL: 10BASE-T1L communication protocol
- Bluetooth® wireless technology (optional)

Dependability

IT security

The manufacturer warranty is valid only if the product is installed and used as described in the Operating Instructions. The product is equipped with security mechanisms to protect it against any inadvertent changes to the settings.

IT security measures, which provide additional protection for the product and associated data transfer, must be implemented by the operators themselves in line with their security standards.

Input

Measured variable

The point level signal is triggered according to the operating mode (minimum or maximum detection) when the level exceeds or falls below the relevant point level.

Measuring range

Depends on the installation location and the pipe extension ordered
Maximum sensor length 6 m (20 ft)

Output

Output signal

HART

SIO mode
8/16 mA (SIO mode) with superimposed digital communication protocol HART, 2-wire

Continuous operation
4 to 20 mA proportional to the oscillation frequency with superimposed digital communication protocol HART, 2-wire

For continuous current output, one of the following modes of operation can be selected:
- 4.0 to 20.5 mA
- NAMUR NE 43: 3.8 to 20.5 mA (factory setting)
- US mode: 3.9 to 20.8 mA

PROFINET over Ethernet-APL

10BASE-T1L, 2-wire 10 Mbit/s

Signal on alarm

Signal on alarm in accordance with NAMUR recommendation NE 43.

4 to 20 mA HART:
- Maximum alarm: can be set from 21.5 to 23 mA
- Minimum alarm: < 3.6 mA (factory setting)

PROFINET over Ethernet-APL:
- According to "Application layer protocol for decentralized periphery", Version 2.4
- Diagnostics according to PROFINET PA Profile 4.02

Load

4 to 20 mA passive, HART

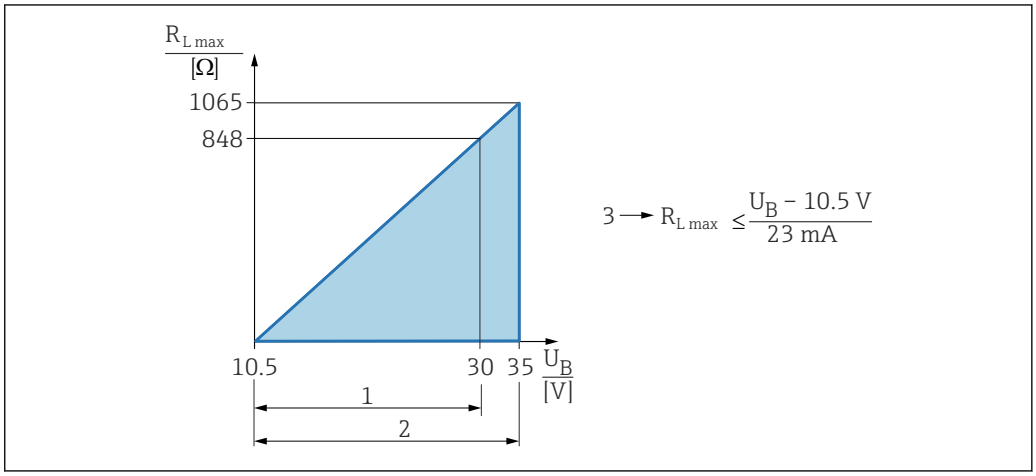

A0039232

1 *Power supply DC 10.5 to 30 V Ex i*
2 *Power supply DC 10.5 to 35 V, for other types of protection and non-certified device versions*
3 *R_{Lmax} maximum load resistance*
U_B Supply voltage

Operation via handheld terminal or PC with operating program: take minimum communication resistance of 250 Ω into consideration.

Damping

HART
- The damping affects all outputs, including the output signal and the display.
- It is only available in 4 to 20 mA continuous operation and has no effect on the SIO mode.
- The damping can be adjusted continuously between 0 to 999 s using the local display, Bluetooth® wireless technology, handheld control unit, or PC with operating program.
- Factory setting: 1 s

PROFINET over Ethernet-APL
- The damping can only be activated for analog inputs 1 to 3.
- The damping can be adjusted continuously between 0 and 999 s.

The device uses various modules for cyclic data exchange with the control system.

Switch output

Preconfigured switching delay available for order:
- 0.5 s when the vibrating fork is covered and 1.0 s when it is uncovered (factory setting)
- 0.25 s when the vibrating fork is covered and 0.25 s when it is uncovered
- 1.5 s when the vibrating fork is covered and 1.5 s when the vibrating fork is uncovered
- 5.0 s when the vibrating fork is covered and 5.0 s when the vibrating fork is uncovered

The user can also set the switching delays for when the fork is covered and uncovered in the range from 1 to 60 seconds independently of one another.

(operation via display, Bluetooth® wireless technology or web browser, FieldCare, DeviceCare, AMS, PDM)

Ex connection data

See safety instructions (XA): All data relating to explosion protection are provided in separate Ex documentation and are available from the Downloads area of the Endress+Hauser website. The Ex documentation is supplied as standard with all devices approved for use in explosion hazardous areas.

Protocol-specific data

HART
- Manufacturer ID: 17 (0x11)
- Device type code: 0x11C4
- Device revision: 1
- HART specification: 7

- DD revision: 1
- Device description files (DTM, DD) information and files at:
  - www.endress.com
  - www.fieldcommgroup.org
- HART load: min. 250 Ω

HART device variables (preset at the factory)

The following measured values are assigned to the device variables at the factory:

Device variable	Measured value
Primary variable (PV) parameter (Primary variable) [1]	Level limit detection [2]
Secondary variable (SV) parameter (Secondary variable)	Sensor frequency [3]
Tertiary variable (TV) parameter (Third variable)	Fork state [4]
Quaternary variable (QV) parameter (Quaternary variable)	Sensor temperature

1) **Primary variable (PV)** parameter is always applied to the current output.
2) In limit detection, the initial state depends on the **Fork state** parameter (covered or uncovered) and the safety function (MIN or MAX)
3) Sensor frequency is the oscillation frequency of the fork
4) Fork state shows the status of the vibrating fork (**Fork covered** option/**Fork uncovered** option)

Choice of HART device variables

- Level limit detection
- Sensor frequency
- Fork state
- Sensor temperature
- Terminal current
  The terminal current is the read-back current on terminal block. Visibility depends on order options or device settings
- Terminal voltage
  Visibility depends on order options or device settings

Supported functions

- Burst mode
- Additional transmitter status
- Device locking

PROFINET over Ethernet-APL

Protocol	Application layer protocol for decentral device periphery and distributed automation, Version 2.4
Communication type	Ethernet Advanced Physical Layer 10BASE-T1L
Conformity class	Conformance class B
Netload Class	Netload Class II
Baud rates	Automatic 10 Mbit/s with full-duplex detection
Periods	From 32 ms
Polarity	Auto-polarity for automatic correction of crossed TxD and RxD pairs
Media Redundancy Protocol (MRP)	Yes
System redundancy support	System redundancy S2 (2 AR with 1 NAP)
Device profile	Application interface identifier 0xB360 Generic device (PA 4.02 Profile Discrete Input)
Manufacturer ID	0x11
Device type ID	0xA1C4

Device description files (GSD, FDI, DTM, DD)	Information and files at: ▪ www.endress.com On the product page for the device: Documents/Software → Device drivers ▪ www.profibus.org
Supported connections	▪ 2 x AR (IO Controller AR) ▪ 1 x AR (IO-Supervisor Device AR connection allowed) ▪ 1 x Input CR (Communication Relation) ▪ 1 x Output CR (Communication Relation) ▪ 1 x Alarm CR (Communication Relation)
Configuration options for device	▪ Manufacturer-specific software (FieldCare, DeviceCare) ▪ Web browser ▪ Device master file (GSD), can be read out via the integrated web server of the device ▪ DIP switch for setting the service IP address
Configuration of the device name	▪ DCP protocol ▪ Process Device Manager (PDM) ▪ Integrated web server
Supported functions	▪ Identification & Maintenance Simple device identification via: ▪ Control system ▪ Nameplate ▪ Measured value status The process variables are communicated with a measured value status ▪ Blinking feature via the local display for simple device identification and assignment ▪ Device operation via operating tools (e.g. FieldCare, DeviceCare, SIMATIC PDM)
System integration	For information on system integration, see Operating Instructions ▪ Cyclic data transmission ▪ Overview and description of the modules ▪ Status coding ▪ Startup parameterization ▪ Factory setting

HART data

- Minimum start-up voltage: 10.5 V
- Start-up current: > 3.6 mA
- Start-up time: < 8 s
- Minimum operating voltage: 10.5 V
- Multidrop current: 4 mA

Heartbeat Technology

Heartbeat Technology modules

Heartbeat Technology comprises 3 modules. These three modules combined check, evaluate and monitor device functionality and process conditions.

- Heartbeat Diagnostics
- Heartbeat Verification
- Heartbeat Monitoring

Power supply

Terminal assignment

Single compartment housing

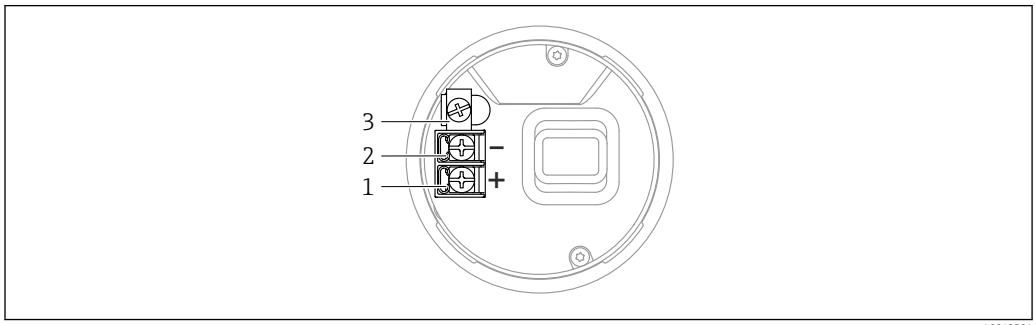

A0042594

2 *Connection terminals and ground terminal in the connection compartment, single compartment housing*

1 *Positive terminal*
2 *Negative terminal*
3 *Internal ground terminal*

Dual-compartment housing, L-form

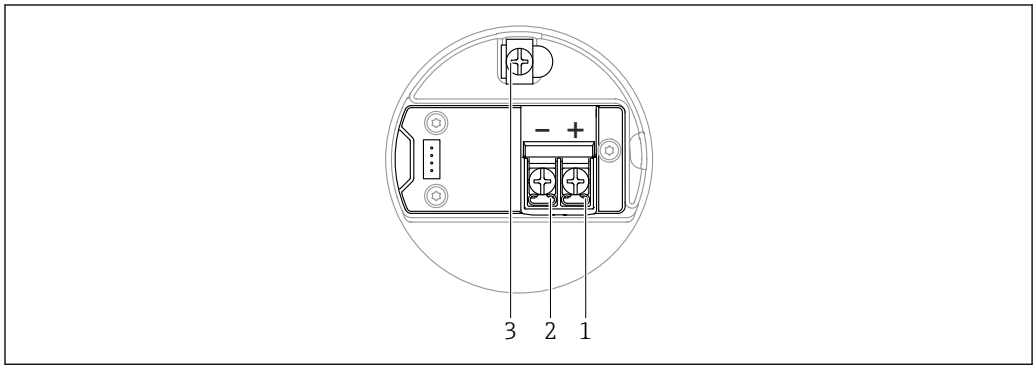

A0045842

3 *Connection terminals and ground terminal in the connection compartment, dual-compartment housing, L-form*

1 *Plus terminal*
2 *Minus terminal*
3 *Internal ground terminal*

Available device plugs

In the case of devices with a plug, it is not necessary to open the housing for connection purposes.

Various M12 sockets are available as accessories for devices with M12 plugs.

For more details, see the "Accessories" section.

M12 plug with pin assignment for HART

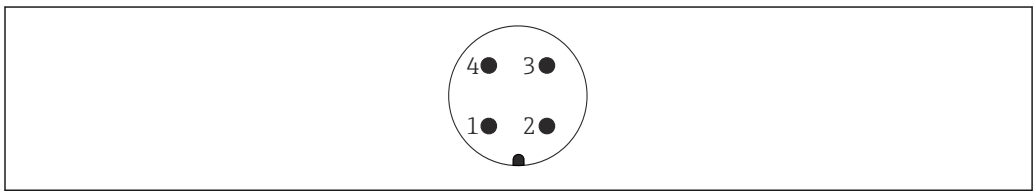

A0011175

4 *View of the connection on the device*

1 *Signal +*
2 *Not used*
3 *Signal –*
4 *Ground*

M12 plug with pin assignment for PROFINET over Ethernet-APL

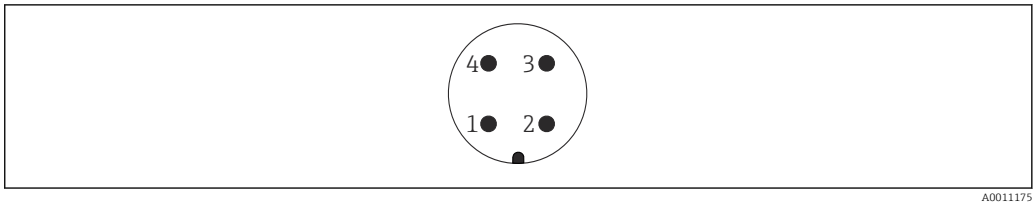

5 View of the connection on the device

1 *APL signal -*
2 *Ethernet-APL signal +*
3 *Shielding*
4 *Not used*

Supply voltage

HART

- U = DC 10.5 to 35 V (Ex d, Ex e, not Ex)
- U = DC 10.5 to 30 V (Ex i)
- Rated current: 4 to 20 mA HART

- The power unit must be tested to ensure it meets safety requirements (e.g. PELV, SELV, Class 2) and must comply with the relevant protocol specifications.
- Comply with the following according to IEC 61010-1: provide a suitable circuit breaker for the device.

Depending on the supply voltage at the moment the device is switched on, the backlight is switched off (supply voltage < 13 V).

PROFINET over Ethernet-APL

APL power class A (DC 9.6 to 15 V 540 mW)

The APL field switch must be tested to ensure it meets safety requirements (e.g., PELV, SELV, Class 2) and must comply with the relevant protocol specifications.

Electrical connection

Connection example

PROFINET over Ethernet-APL

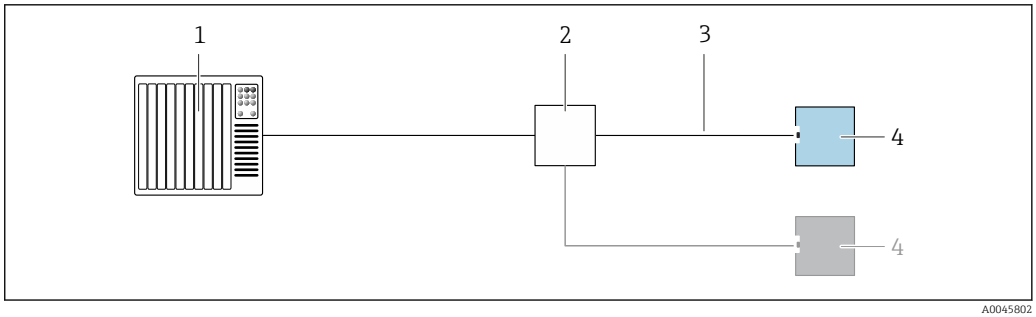

6 Connection example for PROFINET over Ethernet-APL

1 *Automation system*
2 *APL field switch*
3 *Observe cable specifications*
4 *Transmitter*

Potential equalization

WARNING

Ignitable sparks or excessively high surface temperatures.
Explosion hazard!

- Please refer to the separate documentation on applications in hazardous areas for the safety instructions.

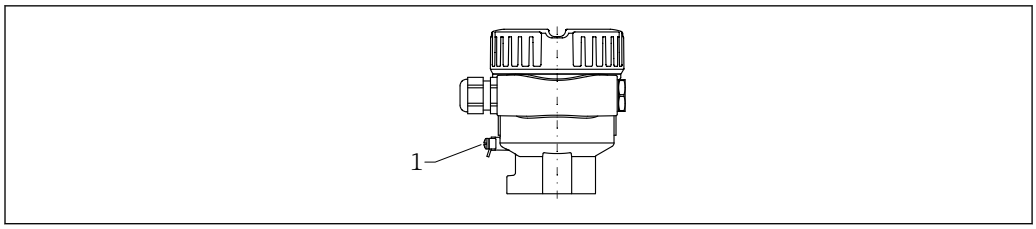

1 Ground terminal for connecting the potential matching line (example)

If necessary, the potential matching line can be connected to the external ground terminal of the transmitter before the device is connected.

For optimum electromagnetic compatibility:
- Potential matching line as short as possible
- Observe a cross-section of at least 2.5 mm² (14 AWG)

Terminals

- Supply voltage and internal ground terminal: 0.5 to 2.5 mm² (20 to 14 AWG)
- External ground terminal: 0.5 to 4 mm² (20 to 12 AWG)

Cable entries

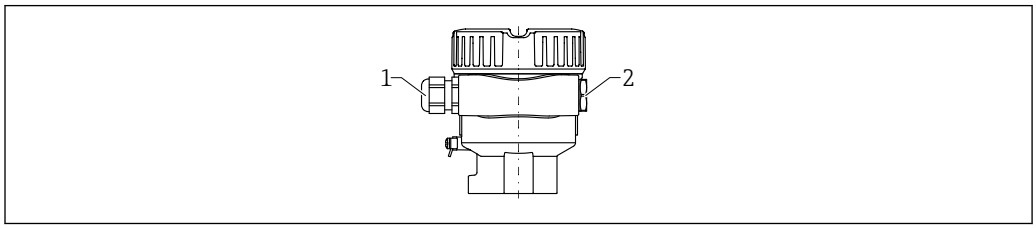

7 Example

1 Cable entry
2 Blind plug

The type of cable entry depends on the device version ordered.

Cable specification

The cable outer diameter depends on the cable entry used.
Cable outer diameter:
- Plastic gland: Ø5 to 10 mm (0.2 to 0.38 in)
- Nickel-plated brass gland: Ø7 to 10.5 mm (0.28 to 0.41 in)
- Stainless steel gland: Ø7 to 12 mm (0.28 to 0.47 in)

PROFINET over Ethernet-APL

Rated cross-section
Protective earth or grounding of the cable shield
> 1 mm² (17 AWG)

Reference cable type

The reference cable type for APL segments is fieldbus cable type A, MAU type 1 and 3 (specified in IEC 61158-2). This cable meets the requirements for intrinsically safe applications according to IEC TS 60079-47 and can also be used in non-intrinsically safe applications.

Cable type	A
Cable capacitance	45 to 200 nF/km
Loop resistance	15 to 150 Ω/km
Cable inductance	0.4 to 1 mH/km

Further details are provided in the Ethernet-APL Engineering Guideline (https://www.ethernet-apl.org).

Overvoltage protection

Devices without optional overvoltage protection

Equipment from Endress+Hauser fulfills the requirements of the product standard IEC 61326-1 (Table 2 Industrial Environment).

Depending on the type of connection (DC power supply, input line, output line) and in accordance with IEC 6132 6-1, different test levels are used to prevent transient overvoltages (IEC 61000-4-5 Surge): Test level for DC power supply lines and IO lines: 1 000-V-wire to ground

Devices with optional overvoltage protection

- Spark-over voltage: min. DC 400 V
- Tested in accordance with:
  - IEC 60079-14 Subsection 12.3
  - IEC 60060-1 Section 7
- Nominal discharge current: 10 kA

NOTICE

The device can be damaged by excessively high electrical voltages.

▶ Always ground the device with integrated overvoltage protection.

Overvoltage category

Overvoltage category II

Performance characteristics

Reference operating conditions

- As per IEC 62828-1
- Ambient temperature: +23 °C (+73 °F)
- Process temperature: +23 °C (+73 °F)
- Humidity φ = constant, in the range: 5 to 80 % rF ± 5 %
- Medium density (water): 1 g/cm³ (62.4 lb/ft³)
- Medium viscosity: 1 mPa·s
- Atmospheric pressure p_A = constant, in the range: 860 to 1 060 mbar (12.47 to 15.37 psi)
- Process pressure: Atmospheric pressure/unpressurized
- Sensor installation: Vertically and from above
- Density selection switch: > 0.7 g/cm³ (43.7 lb/ft³)
- Switch direction of sensor: Uncovered to covered
- Supply voltage: DC 24 V ±3 V

Taking the switch point into consideration

The following are typical switch points, depending on the orientation of the level switch.

Minimum distance between the tuning fork and the tank wall or pipe wall: 10 mm (0.39 in)

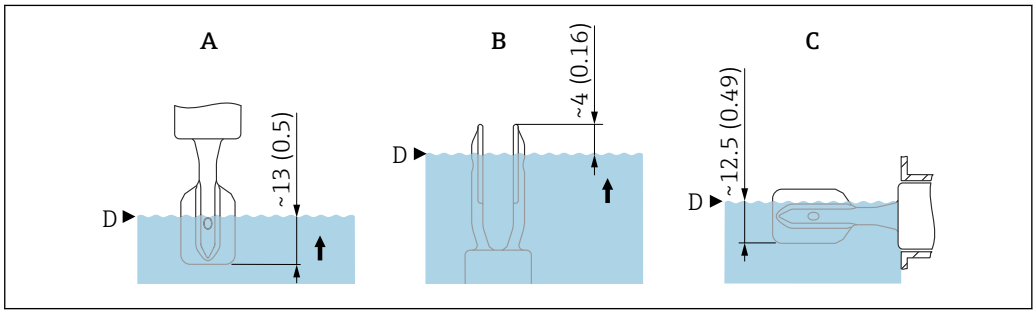

8 *Typical switch points. Unit of measurement mm (in)*

A Installation from above
B Installation from below
C Installation from the side
D Switch point (at reference operating conditions, e.g., water with a temperature of 23 °C (73 °F))

Maximum measurement error	At reference operating conditions: max. ± 1 mm (0.04 in) at switch point
Resolution	**HART** Current output: < 1 µA
Reaction time	**Dead time, time constant, settling time** Presentation of the dead time, time constant and settling time as per DIN EN 61298-2

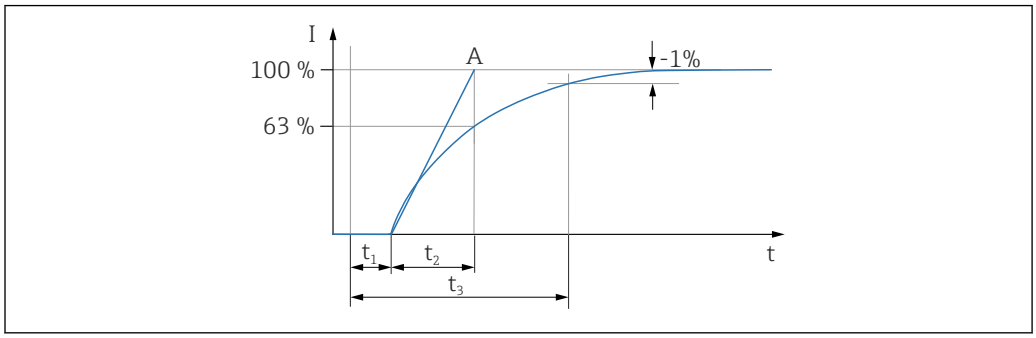

t_1 Dead time
t_2 Time constant
t_3 Settling time
A Stable full scale value

Dynamic behavior, current output	**HART** ▪ Dead time (t_1): 100 ms ▪ Time constant T63 (t_2): can be set from 0 to 999 s ▪ Settling time (t_3): minimum 250 ms

Dynamic behavior, digital output	**HART**
	▪ Dead time (t_1):
	  ▪ Minimum: 200 ms
	  ▪ Maximum: 800 ms
	▪ Time constant T63 (t_2): can be set from 0 to 999 s
	▪ Settling time (t_3): minimum 200 ms
	
	Reading cycle:
	▪ Acyclic: maximum 3/s, typically 1/s (depending on command # and number of preambles)
	▪ Cyclic (burst): maximum 3/s, typically 2/s
	
	The device commands the burst mode function for cyclic value transmission via the HART communication protocol.
	
	Cycle time (update time):
	Cyclic (burst): at least 300 ms
	
	PROFINET over Ethernet-APL
	▪ Dead time (t_1):
	  Maximum: 32 ms
	▪ Time constant T63 (t_2): 0 s
	▪ Settling time (t_3): 0 ms
	
	Cycle time (update time): at least 32 ms

Hysteresis	Typically 2.5 mm (0.1 in)
Non-repeatability	0.5 mm (0.02 in)
Influence of the process temperature	The switch point moves from +1.4 to −2.6 mm (+0.06 to −0.1 in) in the temperature range of −50 to +150 °C (−58 to +302 °F)
Influence of the process pressure	The switch point moves from 0 to 2.6 mm (0 to 0.1 in) in the pressure range of −1 to +64 bar (−14.5 to +928 psi)

Influence of the density of the process medium (at room temperature and normal pressure)

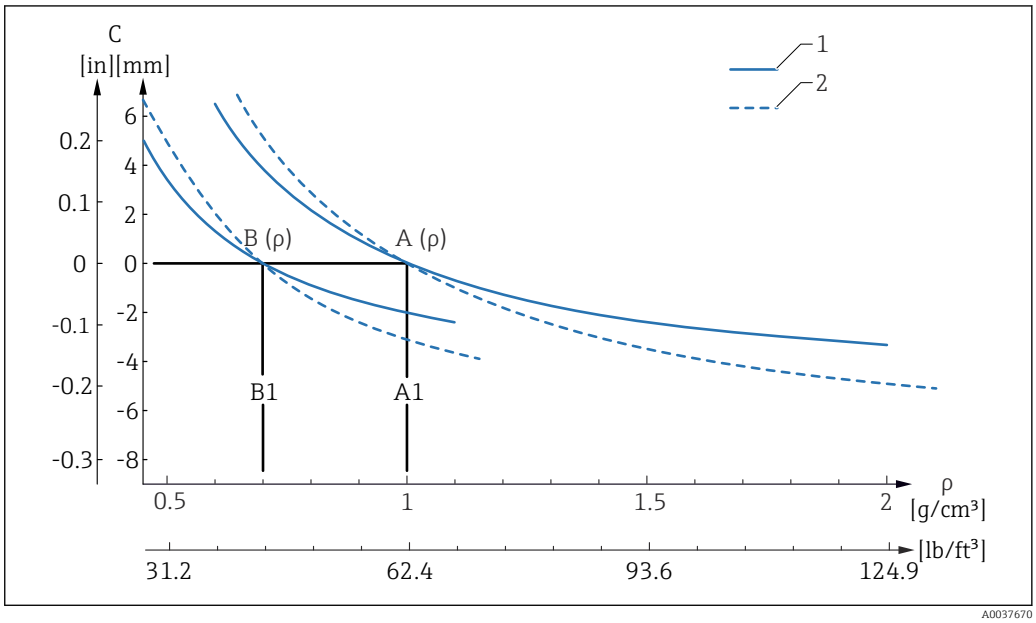

9 Switch point deviation over density

A Set density (ρ) > 0.7 g/cm³ (43.7 lb/ft³)
A1 Reference condition ρ = 1 g/cm³ (62.4 lb/ft³)
B Set density (ρ) > 0.5 g/cm³ (31.21 lb/ft³)
B1 Reference condition ρ = 0.7 g/cm³ (43.7 lb/ft³)
C Switch point deviation
1 Material 316L
2 Material Alloy C22

Density setting
- TC_{typ}, [mm/10 k]
  - ρ > 0.7 g/cm³ (43.7 lb/ft³): −0.2
  - ρ > 0.5 g/cm³ (31.21 lb/ft³): −0.2
- $Pressure_{typ}$, [mm/10 bar]
  - ρ > 0.7 g/cm³ (43.7 lb/ft³): −0.3
  - ρ > 0.5 g/cm³ (31.21 lb/ft³): −0.4

Installation

Mounting location, orientation

Mounting instructions
- Any orientation for compact version or version with a pipe length of up to 500 mm (19.7 in)approx.
- Vertical orientation from above for device with long pipe
- Minimum distance between the tuning fork and the tank wall or pipe wall: 10 mm (0.39 in)

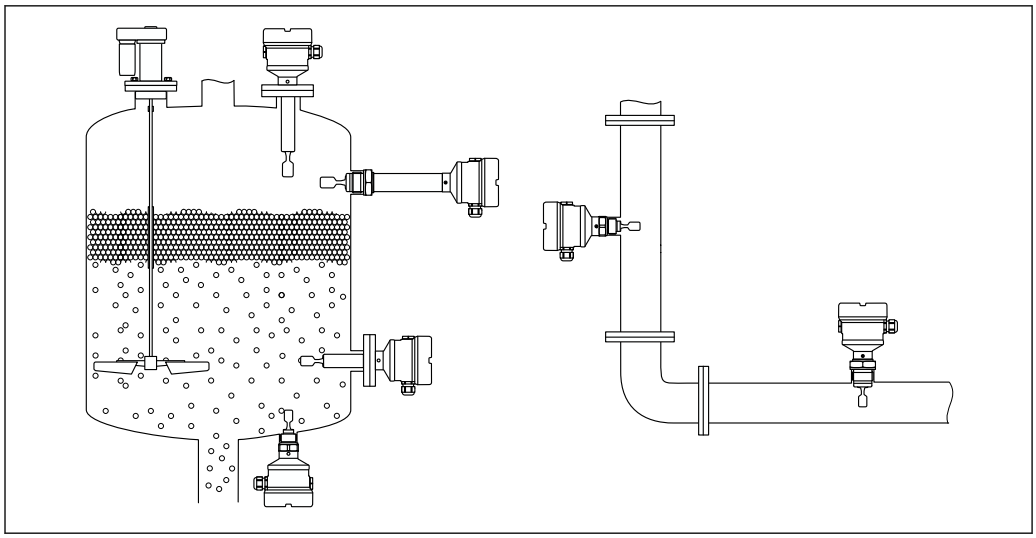

10 *Installation examples for a vessel, tank or pipe*

Installation instructions

Take viscosity into consideration

Viscosity values
- Low viscosity : < 2 000 mPa·s
- High viscosity: > 2 000 to 10 000 mPa·s

Low viscosity

Low viscosity, e.g. water: < 2 000 mPa·s

It is permitted to position the tuning fork within the installation socket.

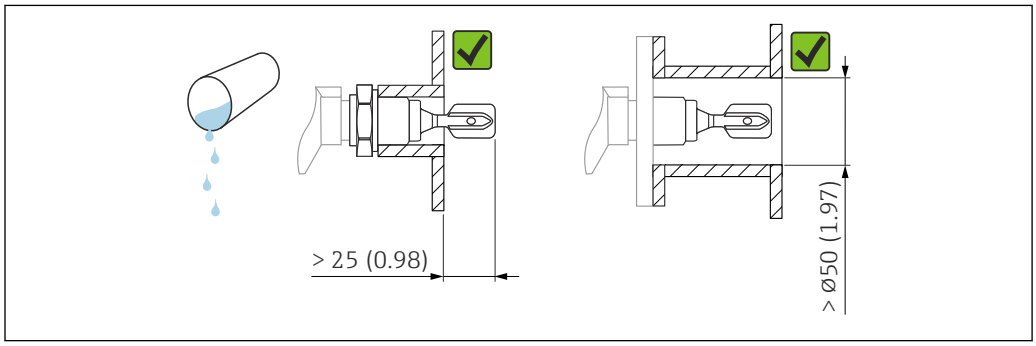

11 *Installation example for low-viscosity liquids. Unit of measurement mm (in)*

High viscosity

NOTICE

Highly viscous liquids may cause switching delays.
- ▶ Make sure that the liquid can run off the tuning fork easily.
- ▶ Deburr the socket surface.

High viscosity, e.g. viscous oils: ≤ 10 000 mPa·s

The tuning fork must be located outside the installation socket!

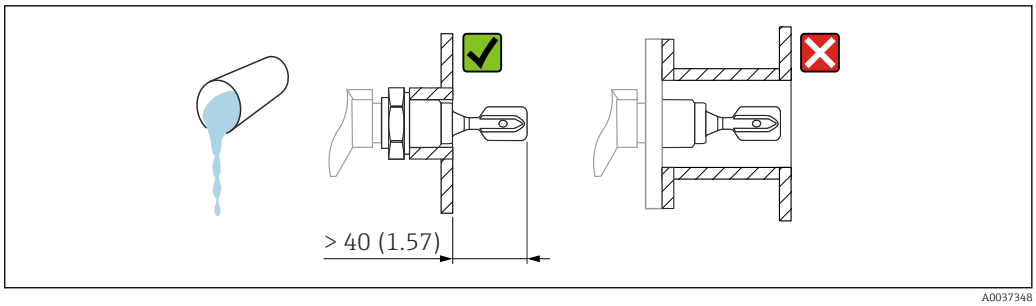

12 *Installation example for a highly viscous liquid. Unit of measurement mm (in)*

Avoid buildup

- Use short installation sockets to ensure that the tuning fork projects freely into the vessel
- Leave sufficient distance between the buildup expected on the tank wall and the tuning fork

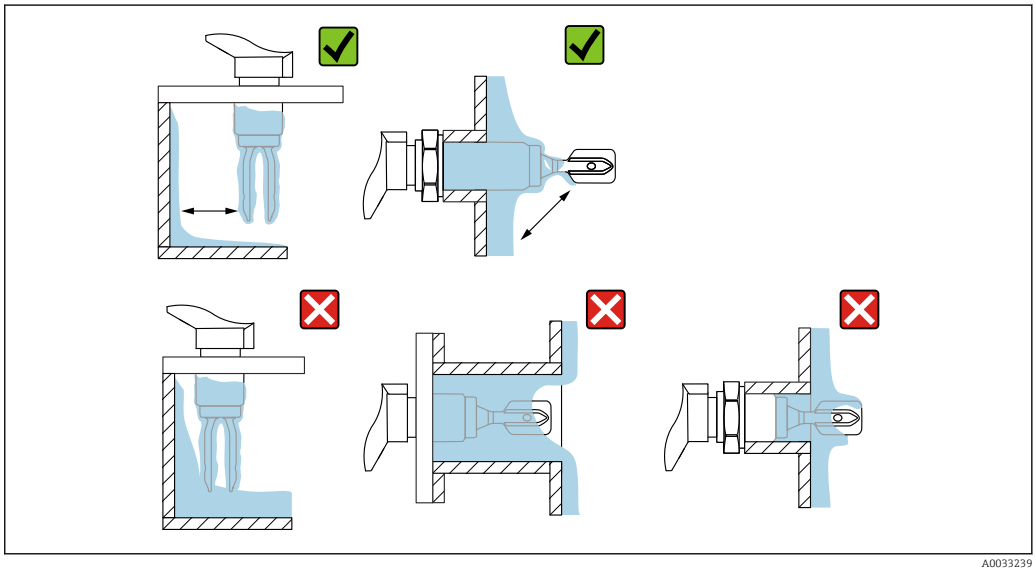

13 *Installation examples for a highly viscous process medium*

Take clearance into consideration

Allow sufficient space outside the tank for mounting, connection and settings involving the electronic insert.

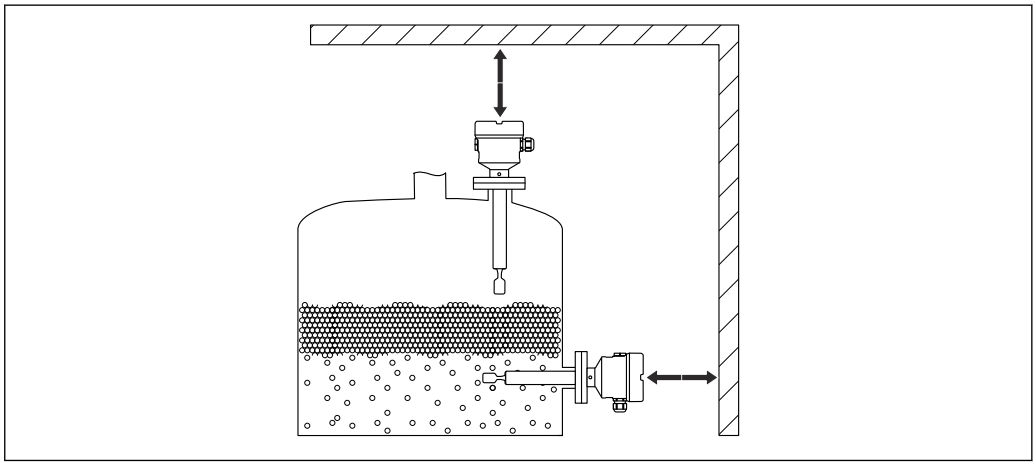

14 *Take clearance into consideration*

Align the vibrating fork using the marking

The vibrating fork can be aligned using the marking in such a way that the medium drains off easily and buildup is avoided.

- Markings for threaded connections: Circle (material specification/thread designation opposite)
- Markings for flange or clamp connections: Line or double line

In addition, the threaded connections have a matrix code that is **not** used for alignment.

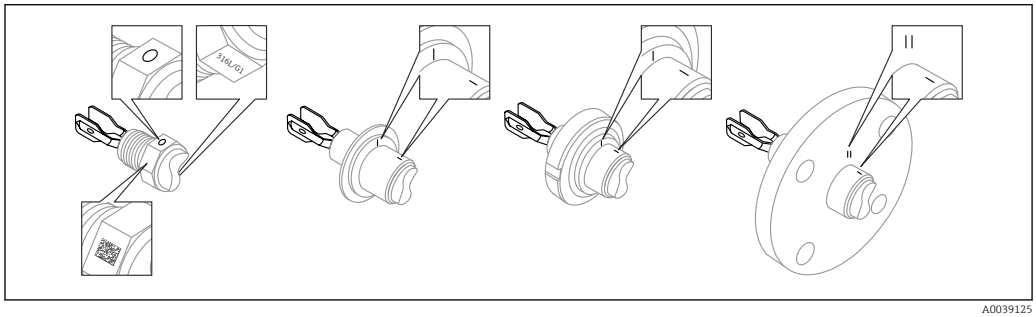

15 *Position of the vibrating fork when installed horizontally in the vessel using the marking*

Installing the device in piping

- Flow velocity up to 5 m/s with a viscosity of 1 mPa·s and density of 1 g/cm³ (62.4 lb/ft³) (SGU). Check for correct functioning in the event of other process medium conditions.
- The flow will not be significantly impeded if the tuning fork is correctly aligned and the marking is pointing in the direction of flow.
- The marking is visible when installed

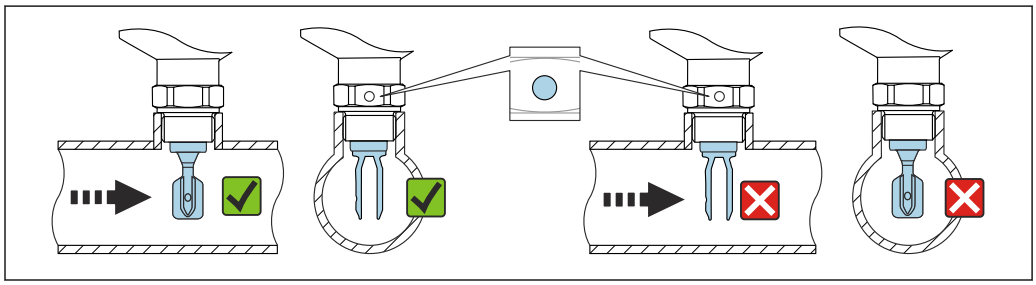

16 *Installation in pipes (take fork position and marking into consideration)*

Aligning the cable entry

All housings can be aligned. Forming a drip loop on the cable prevents moisture from entering the housing.

Housing without set screw

The device housing can be rotated up to 350°.

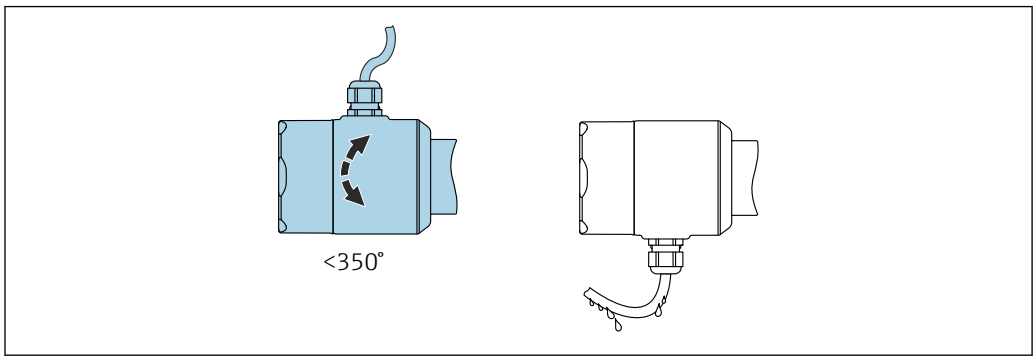

17 *Housing without set screw; form a drip loop on the cable.*

Housing with locking screw

NOTICE

The locking screw is not sufficiently tightened when the device is delivered.
The housing may rotate and become loose due to vibration.
▶ Tighten the locking screw to 3.5 Nm (2.58 lbf ft).

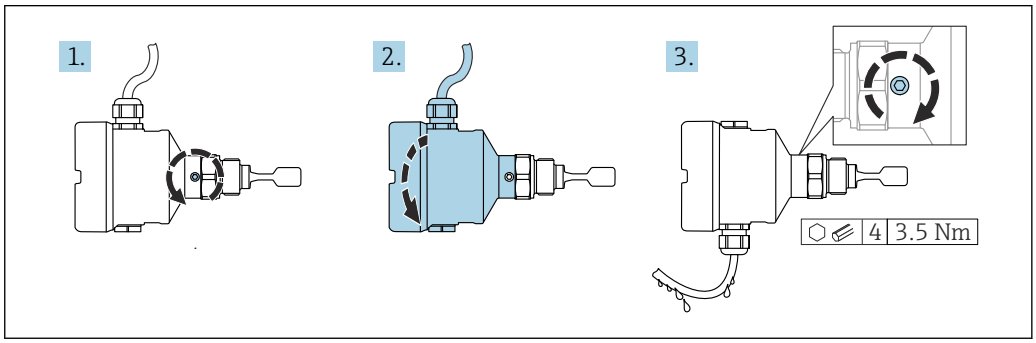

18 *Housing with external locking screw; form a drip loop on the cable*

Special installation instructions

Vessel with heat insulation

If process temperatures are high, the device should be included in the vessel insulation system to prevent the electronics from heating as a result of thermal radiation or convection. The insulation in this case should not be higher than the neck of the device.

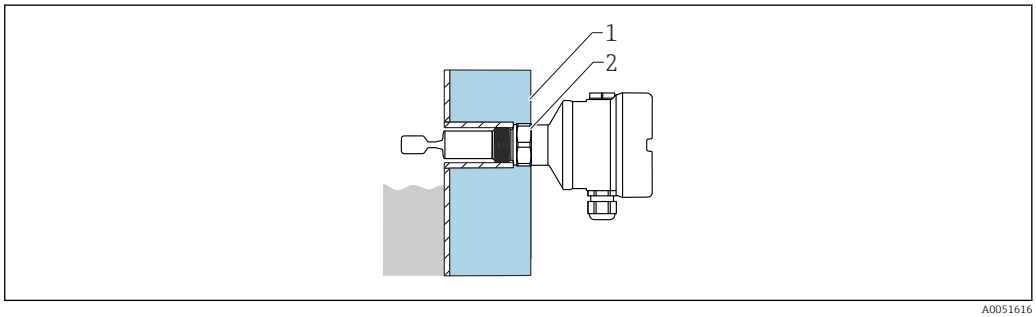

19 *Example of a vessel with heat insulation*

1 *Vessel insulation*
2 *Insulation (up to the housing neck max.)*

Support the device

Support the device in the event of severe dynamic load. Maximum lateral loading capacity of the pipe extensions and sensors: 75 Nm (55 lbf ft).

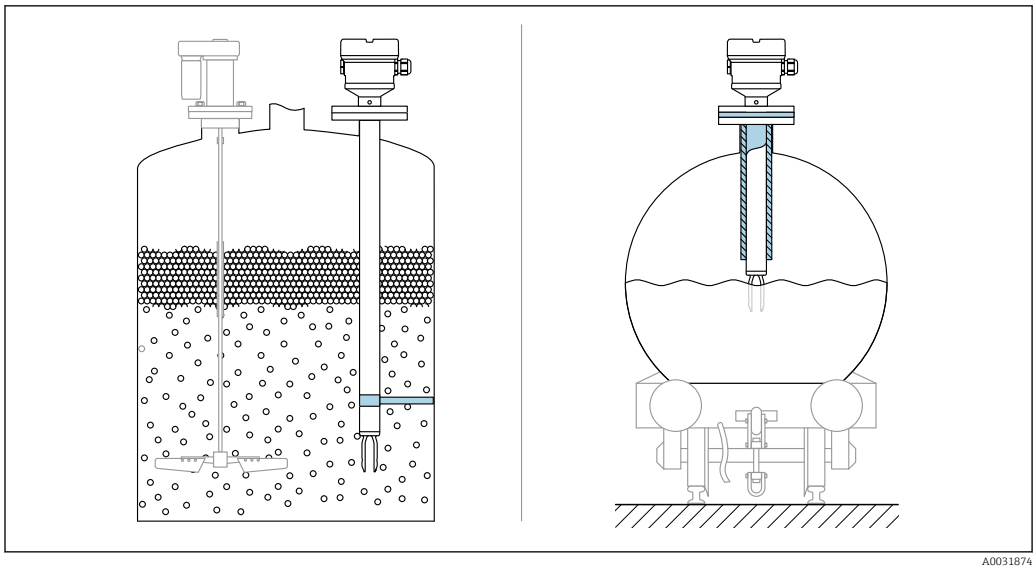

20 *Examples of support in the event of dynamic load*

Marine approval: In the case of pipe extensions or sensors longer than 1 600 mm (63 in), a support is needed at least every 1 600 mm (63 in).

Weld-in adapter with leakage hole

Position the weld-in adapter so that the leakage hole points downwards. This allows any leakage to be detected at an early stage, as the escaping medium becomes visible.

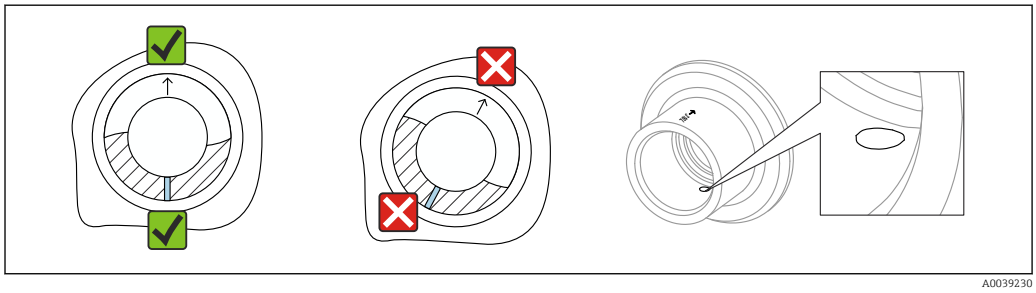

21 *Weld-in adapter with leakage hole*

Sliding sleeves

For more details, see the "Accessories" section.

Special Documentation SD02398F (Installation Instructions)

Environment

Ambient temperature range

The following values apply up to a process temperature of +90 °C (+194 °F). At higher process temperatures, the permitted ambient temperature is reduced (see diagram).
- Without LCD display: −40 to +70 °C (−40 to +158 °F)
- With LCD display: −40 to +70 °C (−40 to +158 °F) with limitations in optical properties, such as display speed and contrast
  Can be used without limitations: −20 to +60 °C (−4 to +140 °F)

Optionally available in combination with HART:
- −50 °C (−58 °F) with restricted operating life and performance
- −60 °C (−76 °F) with restricted operating life and performance,
  Below −50 °C (−58 °F): devices can be permanently damaged

The following ambient temperature applies over the entire process temperature range for devices with a temperature spacer: +70 °C (+158 °F)

Outdoor operation in strong sunlight:
- Mount the device in a shaded location
- Avoid direct sunlight, particularly in warmer climatic regions
- Use a protective cover, can be ordered as an accessory

Single compartment housing (plastic)

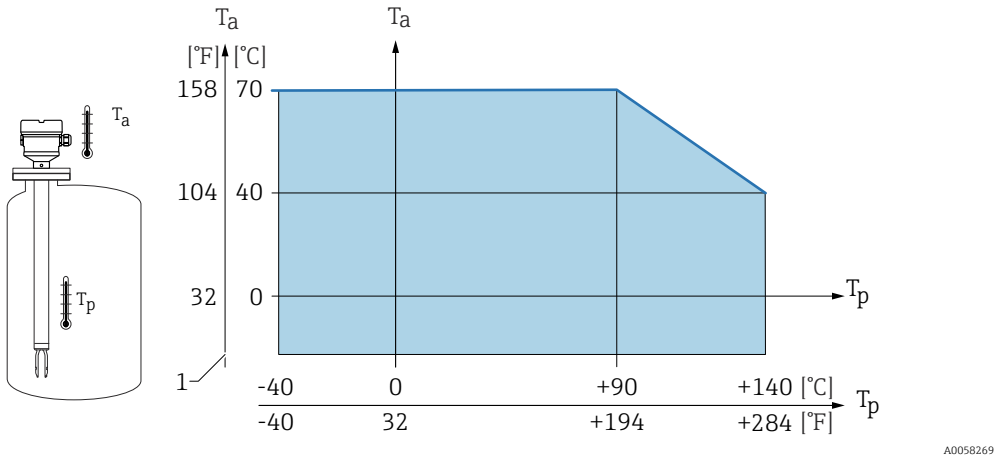

22 *Permitted ambient temperature T_a at the housing as a function of the process temperature T_p in the vessel*

1 *Europe: −20 °C (−4 °F)*
CSA GP: 0 °C (32 °F) indoor use

Single compartment housing (aluminum, coated) and dual compartment housing (aluminum, coated and 316L)

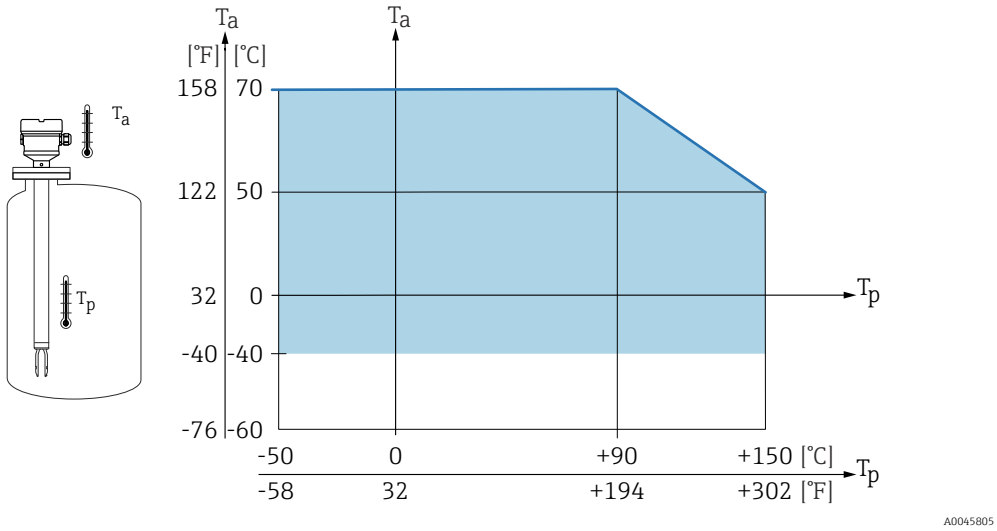

23 *Permitted ambient temperature T_a at the housing as a function of the process temperature T_p in the vessel*

Single compartment housing (316 L, hygiene)

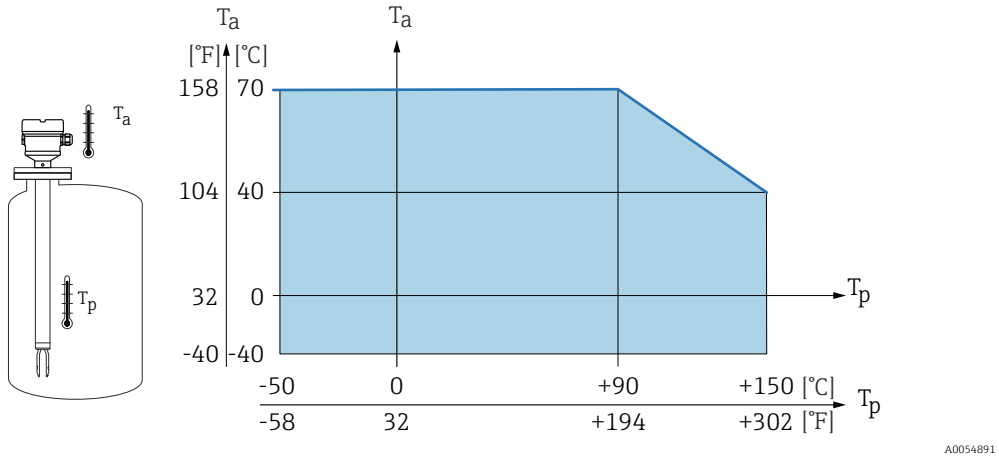

24 *Permitted ambient temperature T_a at the housing as a function of the process temperature T_p in the vessel*

Hazardous area

In the hazardous area, the permitted ambient temperature can be limited depending on the zones and gas groups. Pay attention to the information in the Ex documentation (XA).

Storage temperature	−40 to +80 °C (−40 to +176 °F) Optionally in combination with HART: −50 °C (−58 °F) or −60 °C (−76 °F)
Humidity	Operation up to 100 %. Do not open in a condensing atmosphere.
Operating height	Up to 5 000 m (16 404 ft) above sea level.
Climate class	As per IEC 60068-2-38 test Z/AD
Degree of protection	Testing according to IEC 60529 and NEMA 250 IP68 test condition: 1.83 m H_2O for 24 h **Housing** See cable entries **Cable entries** ▪ M20 coupling, plastic, IP66/68 NEMA Type 4X/6P ▪ M20 coupling, nickel-plated brass, IP66/68 NEMA Type 4X/6P ▪ M20 coupling, 316L, IP66/68 NEMA Type 4X/6P ▪ M20 thread, IP66/68 NEMA Type 4X/6P ▪ G ½ thread, NPT ½ , IP66/68 NEMA Type 4X/6P Degree of protection for M12 plug ▪ When housing is closed and connecting cable is plugged in: IP66/67 NEMA Type 4X ▪ When housing is open or connecting cable is not plugged in: IP20, NEMA Type 1 NOTICE **M12 plug: Loss of IP protection class due to incorrect installation!** ▶ The degree of protection only applies if the connecting cable used is plugged in and screwed tight. ▶ The degree of protection only applies if the connecting cable used is specified according to IP67 NEMA Type 4X. If the "M12 plug" option is selected as the electrical connection, **IP66/67 NEMA Type 4X** applies for all housing types.
Vibration resistance	As per IEC 60068-2-64-2008 a(RMS) = 50 m/s², f = 5 to 2 000 Hz, t = 3 axes x 2 h

For increased oscillations or vibrations, the following additional option is recommended: feature "Application", version "B" 100 bar (1 450 psi) process pressure.

Shock resistance

As per IEC 60068-2-27-2008: 300 m/s² [= 30 g_n] + 18 ms

g_n: standard acceleration of gravity

Mechanical load

Support the device in the event of severe dynamic load. Maximum lateral loading capacity of the pipe extensions and sensors: 75 Nm (55 lbf ft).

For more details, see the "Supporting the device" section.

Pollution degree

Pollution level 2

Electromagnetic compatibility (EMC)

- Electromagnetic compatibility according to EN 61326 series. Interference immunity according to Table 2 (Industrial), interference radiation according to Group 1 Class B
- Electromagnetic compatibility as per NAMUR recommendation EMC NE21
- Maximum deviation during EMC testing: < 0.5 % of span
- Fulfills the requirements of functional safety (SIL) in accordance with EN 61326-3-1 (with FEL60H electronic insert)

For more details, refer to the EU Declaration of Conformity.

Process

Process temperature range

−50 to +150 °C (−58 to +302 °F)

Observe pressure and temperature dependency, see the "Process pressure range of the sensors" section.

Thermal shock

≤ 120 K/s

Process pressure range

−1 to +64 bar (−14.5 to 928 psi) at max. 150 °C (302 °F)

Optionally available for pipe extension and short pipe version:
100 bar (1 450 psi) at max. 150 °C (302 °F)

The maximum pressure for the device depends on the lowest-rated element with regard to pressure.

Components are: process connection, optional mounting parts, or accessories.

WARNING

Incorrect design or use of the device may lead to bursting parts!
This may result in severe, possibly irreversible injury to persons and environmental hazards.

- Only operate the device within the specified limits for the components!
- MWP (maximum working pressure): The maximum working pressure is specified on the nameplate. This value refers to a reference temperature of 20 °C (68 °F) and may be present at the device for an unlimited time. Note temperature dependency of MWP. For higher temperatures, refer to the following standards for the permitted pressure values for flanges:EN 1092-1 (materials 1.4435 and 1.4404 are identical with regard to their stability/ temperature property and are grouped together in under 13E0 in EN 1092-1 Tab. 18. The chemical composition of the two materials can be identical), ASME B 16.5a, JIS B 2220 (the latest version of the standard applies in each case).
- The Pressure Equipment Directive (2014/68/EU) uses the abbreviation "PS". The abbreviation "PS" corresponds to the maximum working pressure (MWP) of the device
- MWP data that deviate from this is provided in the relevant sections of the Technical Information.

The lowest value from the derating curves of the device and of the selected flange applies in each case.

Devices with CRN approval: maximum 90 bar (1 305 psi) for devices with a pipe extension
Information on the Endress+Hauser website: www.endress.com → Downloads.

Process pressure range of the sensors

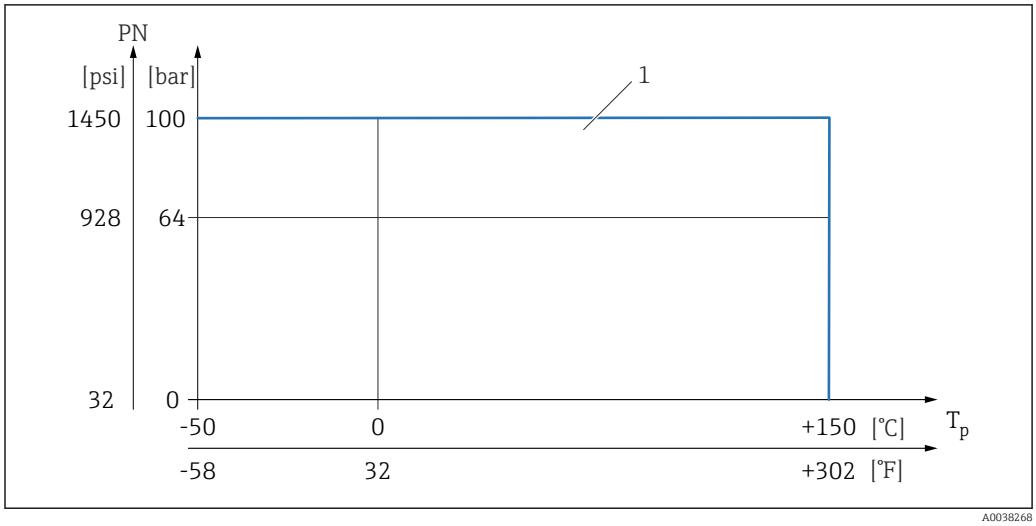

1 *Permissible pressure rating with the "Application" feature selected in the Product Configurator, version "100 bar (1 450 psi)". Exceptions: see "Process connections" section. Canadian CRN approval: The maximum permitted process pressure is limited to 90 bar (1 305 psi) only in combination with the CRN approval. More details on the maximum pressure values are available in the download area of the product page under "www.endress.com".*

Overpressure limit

- PN = 64 bar (928 psi): overpressure limit = 1.5·PN maximum100 bar (1 450 psi) depending on process connection selected
- Membrane burst pressure at 200 bar (2 900 psi)
- PN = 100 bar (1 450 psi): overpressure limit = 1.5·PN maximum150 bar (2 175 psi) depending on process connection selected
- Membrane burst pressure at 400 bar (5 800 psi)

The device function is limited during the pressure test.

The mechanical integrity is guaranteed at pressures up to 1.5 times the process nominal pressure (PN).

Medium density

Liquids with density > 0.7 g/cm³ (43.7 lb/ft³)
Setting > 0.7 g/cm³ (43.7 lb/ft³), as supplied to the customer

Liquids with density > 0.5 g/cm³ (31.2 lb/ft³)
Setting > 0.5 g/cm³ (31.2 lb/ft³), can be ordered as preset value or configurable

Liquids with density > 0.4 g/cm³ (25.0 lb/ft³)
- Setting > 0.4 g/cm³ (25.0 lb/ft³), can be ordered as preset value or configurable
- Functional safety (SIL) for defined media and process parameters on request (only in combination with HART)

Viscosity

≤ 10 000 mPa·s

Pressure tightness

Up to vacuum

In vacuum evaporation plants, select the 0.4 g/cm³ (25.0 lb/ft³)/ density setting.

Solids contents

Ø ≤ 5 mm (0.2 in)

Mechanical construction

Design, dimensions

Device height

The device height consists of the following components:
- Housing including cover
- Temperature spacer and/or pressure-tight feedthrough (second line of defense), optional
- Compact version, pipe extension or short pipe version
- Process connection

The individual heights of the components can be found in the following sections:
- Determine the height of the device and add the individual heights
- Take into consideration the installation distance (space that is used to install the device)

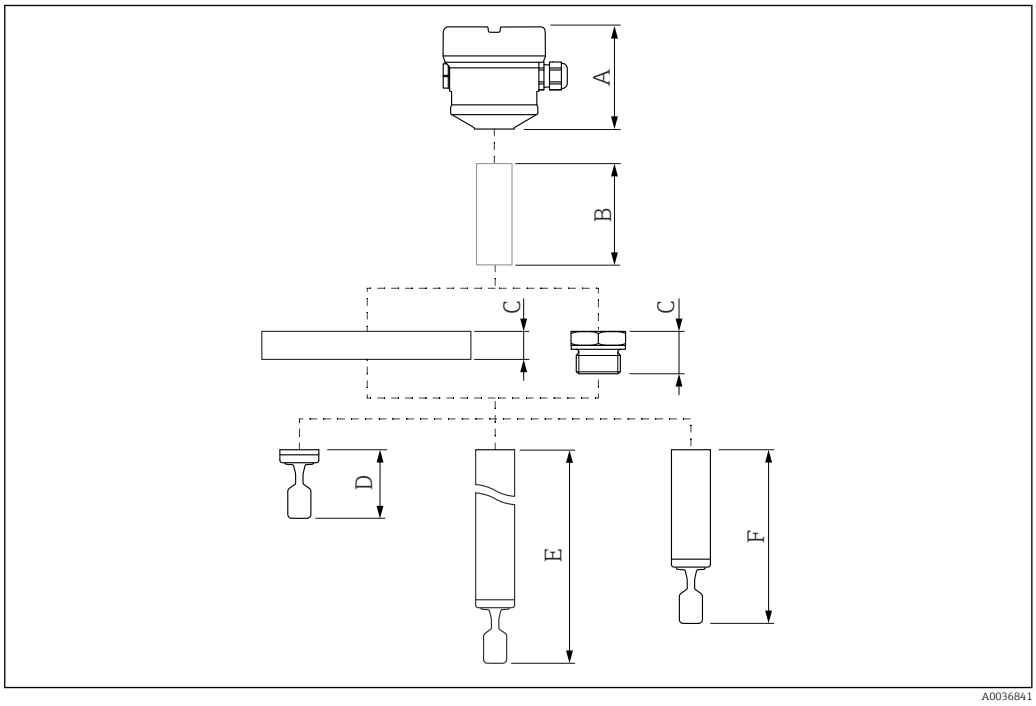

25 Components for determining the height of the device

A Housing including cover
B Temperature spacer, pressure-tight feedthrough (optional)
C Process connection
D Probe design: compact version with vibrating fork
E Probe design: pipe extension with vibrating fork
F Probe design: short pipe version with vibrating fork

Dimensions

The following dimensions are rounded values. As a result, there may be deviations from the specifications in the Product Configurator at www.endress.com.

To view CAD data:

1. Enter www.endress.com in your web browser
2. Search for the device
3. Select the **Configuration** button
4. Configure the device
5. Select the **CAD drawings** button

Housing and cover

All housings can be aligned. The housing alignment can be fixed on housings with a locking screw.

Single compartment housing, plastic

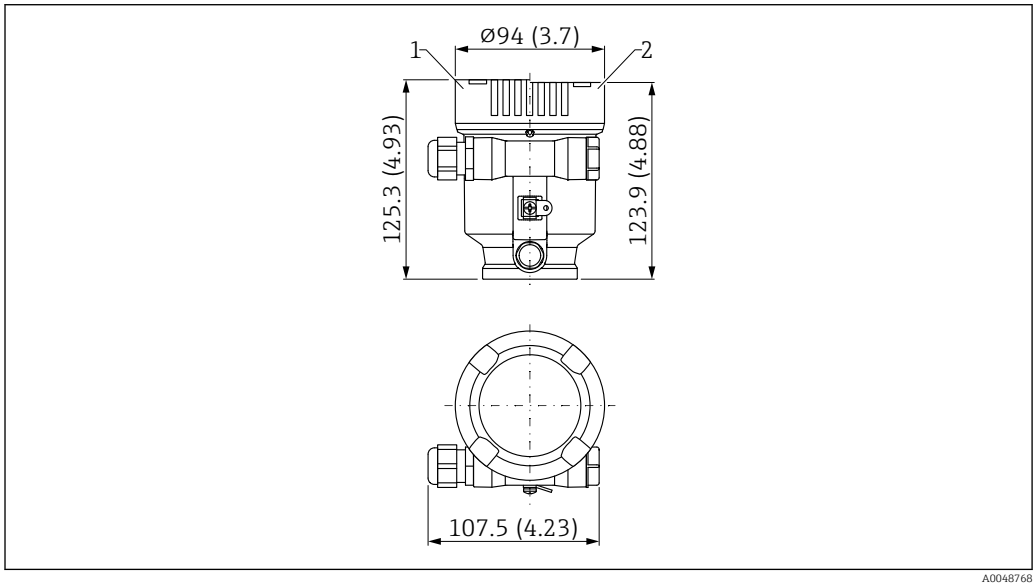

26 Dimensions; single compartment housing, plastic; incl. M20 coupling and plug, plastic. Unit of measurement mm (in)

1 Height with cover including sight glass made of plastic
2 Height with cover without sight glass

Single-compartment housing, aluminum, coated

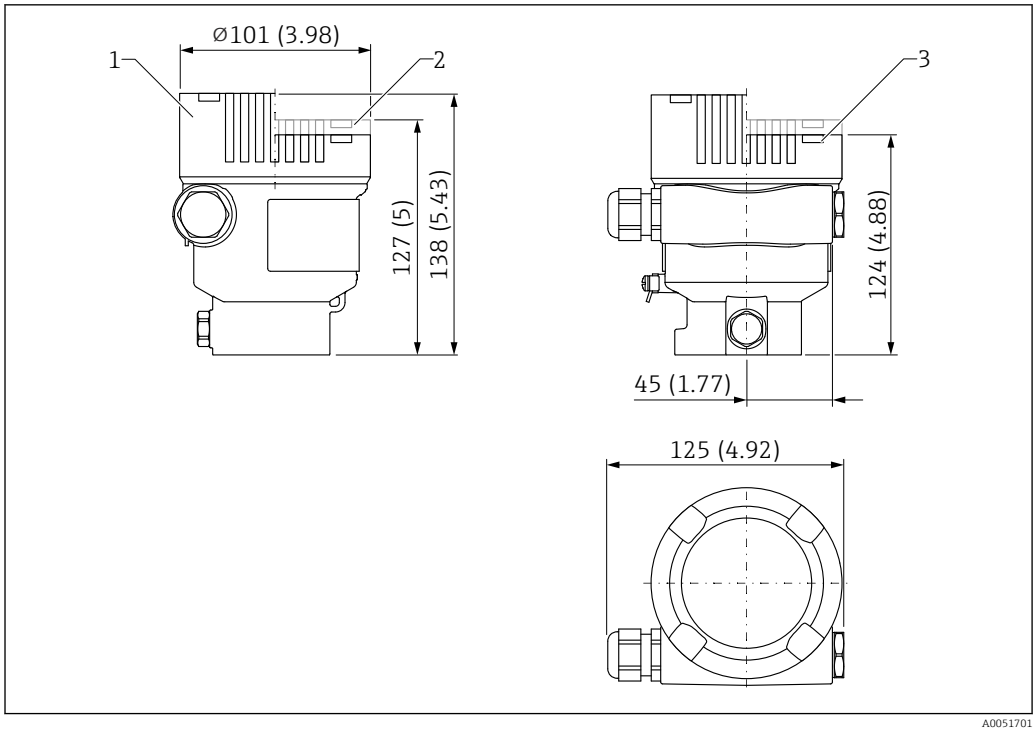

27 Dimensions of single-compartment housing, aluminum, coated. Unit of measurement mm (in)

1 Height with cover comprising glass sight glass (devices for Ex d/XP, dust Ex)
2 Height with cover including sight glass made of plastic
3 Height with cover without sight glass

Single compartment housing, 316L, hygiene

For use in hazardous areas with a certain type of protection, the ground terminal on the outside of the housing is required.

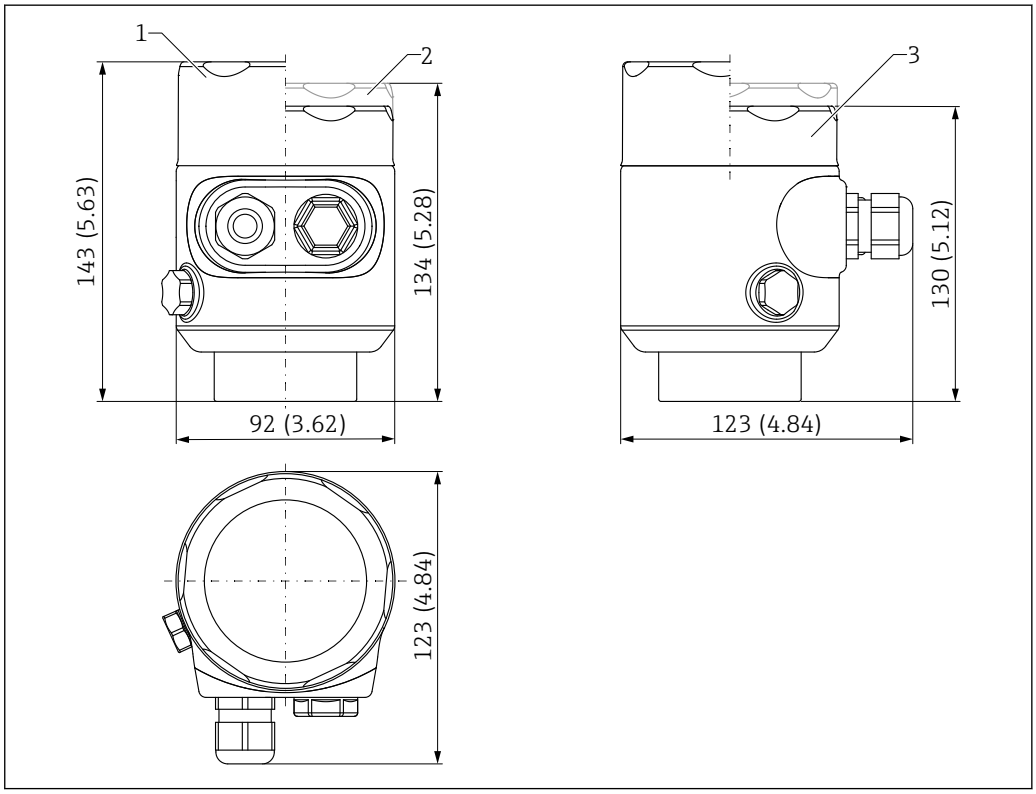

28 *Dimensions of single compartment housing, 316 L, hygienic. Unit of measurement mm (in)*

1 *Height with cover comprising glass sight glass*
2 *Height with cover comprising plastic sight glass*
3 *Height with cover without sight glass*

Dual-compartment housing, L-shaped, aluminum, coated

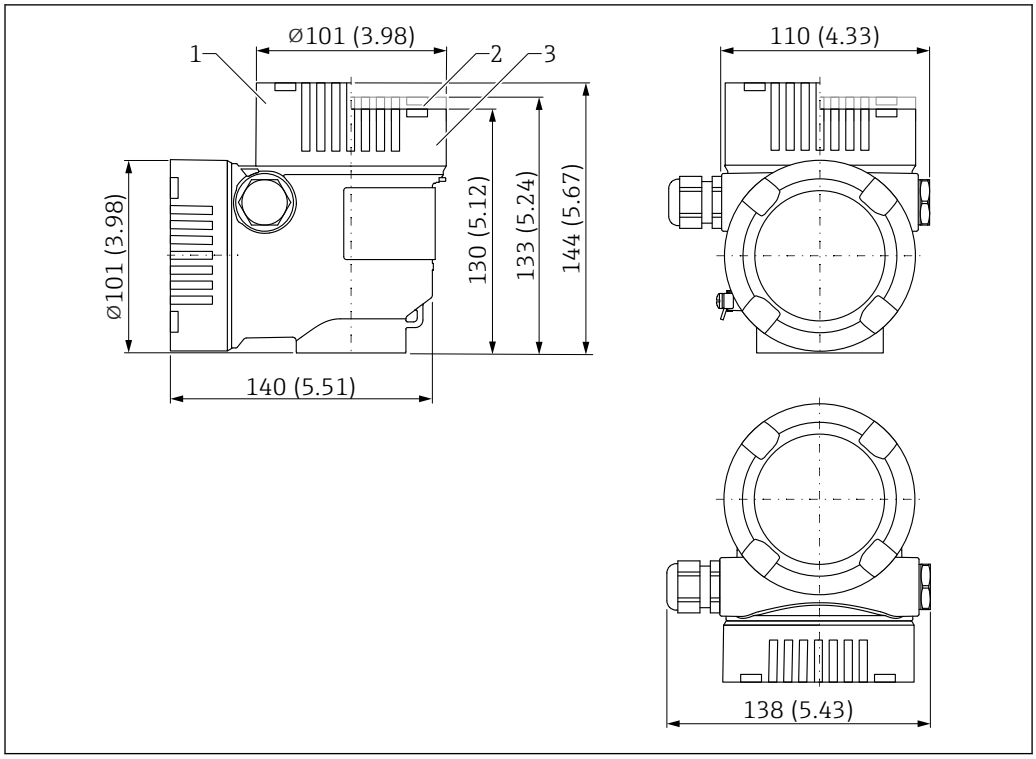

29 Dimensions; dual compartment housing L-shaped, aluminum, coated; incl. M20 coupling and plug, plastic. Unit of measurement mm (in)

1 Height with cover comprising glass sight glass (devices for Ex d/XP, dust Ex)
2 Height with cover including sight glass made of plastic
3 Cover without sight glass

Dual compartment housing, L-shaped, 316L

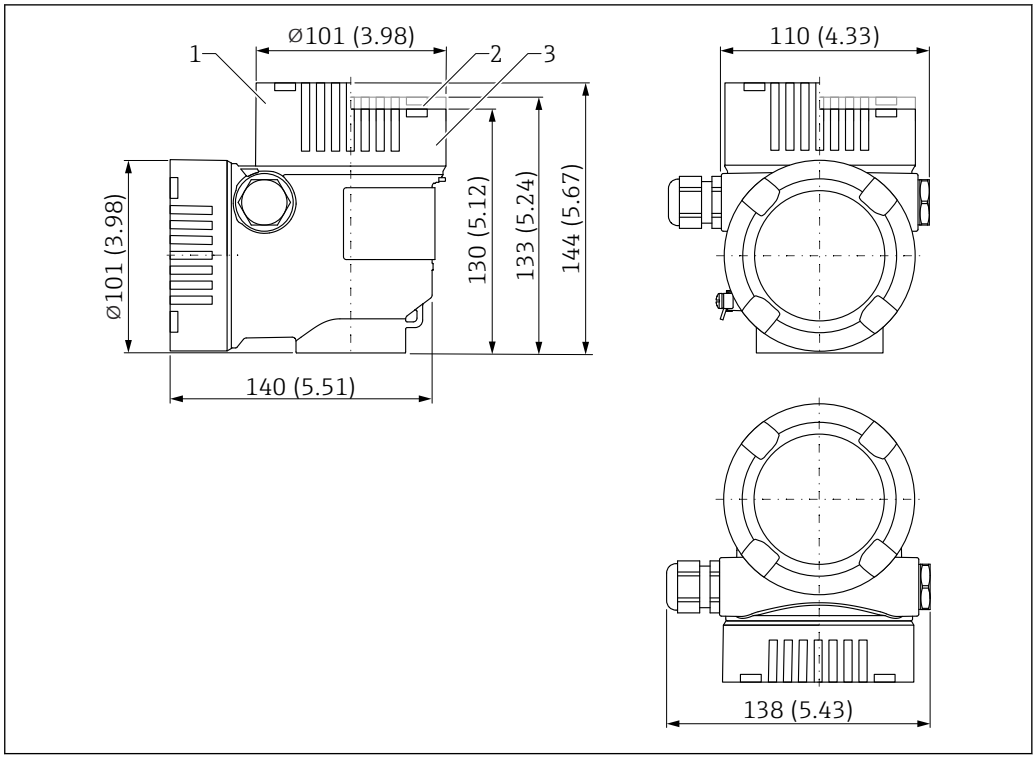

30 Dimensions; dual compartment housing L-shaped, 316L; incl. M20 coupling and plug, plastic. Unit of measurement mm (in)

1 Height with cover comprising glass sight glass (devices for Ex d/XP, dust Ex)
2 Height with cover including sight glass made of plastic
3 Cover without sight glass

Temperature spacer, pressure-tight feedthrough (optional)

Provides sealed insulation for the vessel and a normal ambient temperature for the housing.

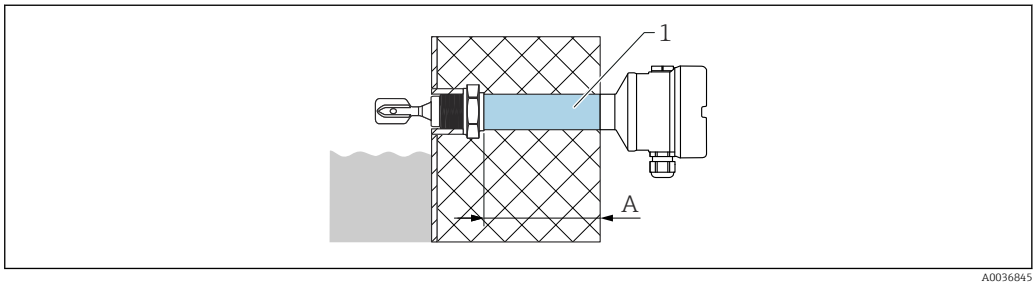

1 Temperature spacer and/or pressure-tight feedthrough with maximum insulation length
A Approx. 140 mm (5.51 in)

Dimension A depends on the process connection selected and can therefore vary. For exact dimensions, information is available from the Endress+Hauser sales office.

Product Configurator, feature "Sensor design":
- Temperature spacer
- Pressure-tight feedthrough (second line of defense)
  If the sensor is damaged, this protects the housing from vessel pressures up to 100 bar (1 450 psi).

Both versions cannot be ordered in combination with Ex d approval.

The "Pressure-tight feedthrough" version can only be selected in conjunction with the "Temperature spacer" option.

Ex d glass feedthrough for pipe extensions

If a pipe extension is required in combination with an Ex d approval, the following design is used:

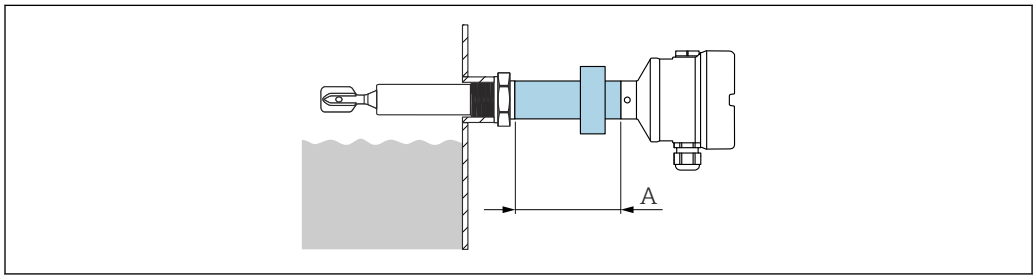

A0046136

31 Ex d glass feedthrough for pipe extensions

A Approx. 76 mm (2.99 in)

Dimension A depends on the process connection selected and can therefore vary. For exact dimensions, information is available from the Endress+Hauser sales office.

Probe design

Compact version

Sensor length L: depends on process connection

For further details, see the "Process connections" section.

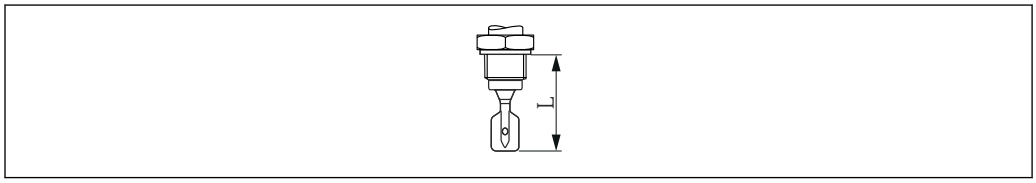

A0042435

32 Probe design: compact version, sensor length L

Short pipe version

Sensor length L: depends on process connection

- Flange approx. 115 mm (4.53 in)
- Thread G ¾ approx. 115 mm (4.53 in)
- Thread G 1 approx. 118 mm (4.65 in)
- Thread NPT, R approx. 99 mm (3.9 in)
- Tri-Clamp approx. 115 mm (4.53 in)
- Flush mount 1" (G 1 welding boss from Endress+Hauser): approx. 104 mm (4.09 in)

Pipe extension

- Sensor lengths L: 117 to 6 000 mm or 4.61 to 236.22 in (material: 316 L)
- Sensor lengths L: 148 to 3 000 mm or 5.83 to 118.11 in (material: Alloy C)
- Length tolerances L:
  - < 1 m (3.3 ft) = −5 mm (−0.2 in)
  - 1 to 3 m (3.3 to 9.8 ft) = −10 mm (−0.39 in)
  - 3 to 6 m (9.8 to 20 ft) = −20 mm (−0.79 in)

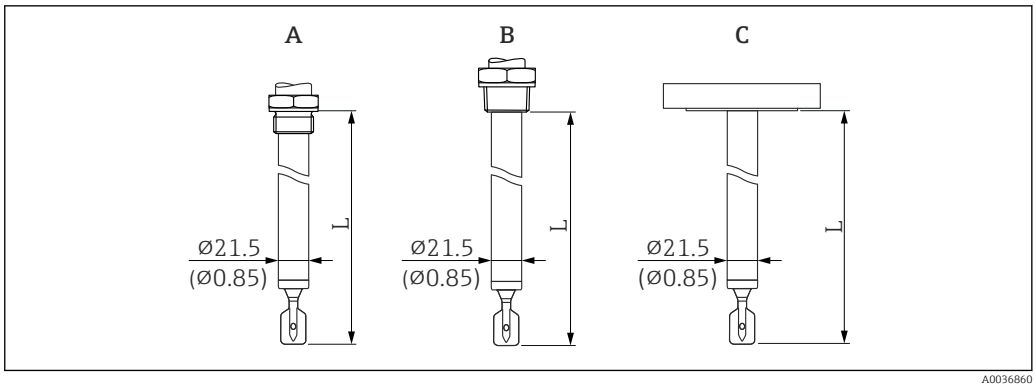

33 Probe designs: pipe extension, short pipe version (sensor length L). Unit of measurement mm (in)

A G ¾, G 1
B NPT ¾, NPT 1, R ¾, R 1
C Flange, clamp/Tri-Clamp

Tuning fork

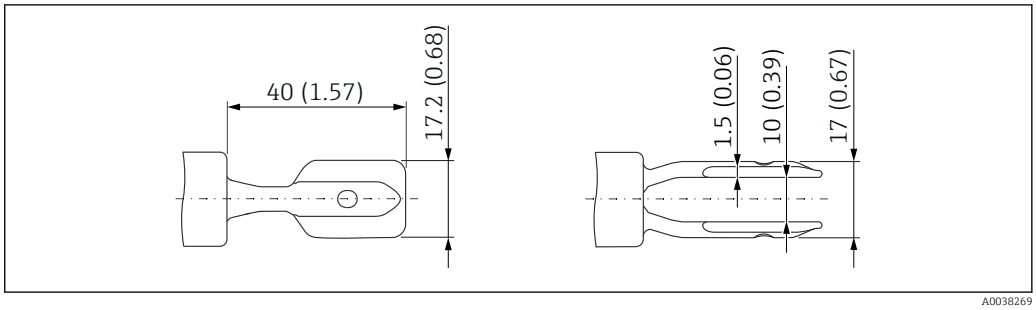

34 Tuning fork. Unit of measurement mm (in)

Process connections

Process connection, sealing surface

- Thread ISO 228, G
- Thread ASME B1.20.01, NPT
- Thread EN 10226, R
- Clamp/Tri-Clamp

- Flange ASME B16.5, RF (Raised Face)
- Flange ASME B16.5, FF (Flat Face)
- Flange ASME B16.5, RTJ (Ring Type Joint)
- Flange EN 1092-1, Form A
- Flange EN 1092-1, Form B1
- Flange EN 1092-1, Form C
- Flange EN 1092-1, Form D
- Flange EN 1092-1, Form E
- Flange JIS B2220, RF (Raised Face)

Height of process connection

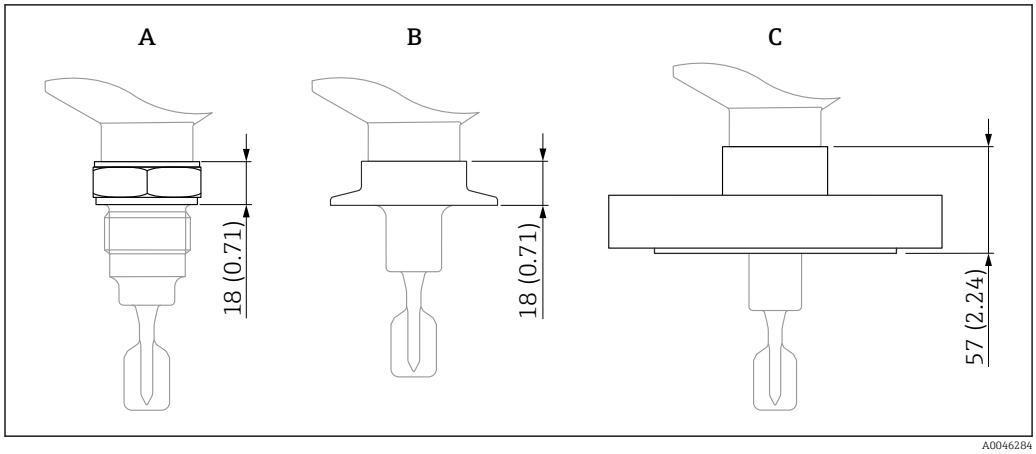

35 Maximum height specification for the process connections. Unit of measurement mm (in)

A Process connection with threaded connection
B Process connection with clamp/Tri-Clamp
C Process connection with flange

Thread ISO228 G for installing in weld-in adapter

G ¾, G 1 suitable for installation in weld-in adapter
- Pressure rating, temperature: ≤ 40 bar (580 psi), ≤ 100 °C (212 °F)
- Pressure rating, temperature: ≤ 25 bar (363 psi), ≤ 150 °C (302 °F)
- Weight G ¾: 0.2 kg (0.44 lb)
- Weight G 1: 0.33 kg (0.73 lb)
- Accessory: weld-in adapter

The weld-in adapter is not included in the scope of delivery. Optionally ordered as “accessory enclosed".

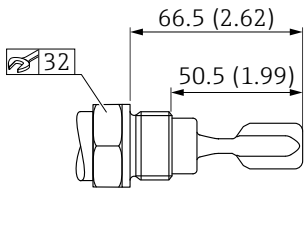

36 ISO 228 G ¾ thread. Unit of measurement mm (in)

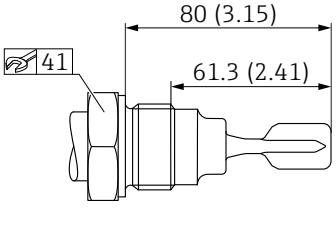

37 ISO 228 G 1 thread. Unit of measurement mm (in)

Thread ISO228 G with flat seal

G ¾, G 1
- Pressure rating: ≤ 100 bar (1 450 psi)
- Temperature: ≤ 150 °C (302 °F)
- Weight G ¾: 0.2 kg (0.44 lb)
- Weight G 1: 0.33 kg (0.73 lb)

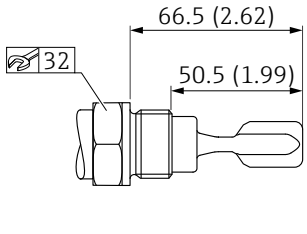

38 Thread ISO228 G ¾. Unit of measurement mm (in)

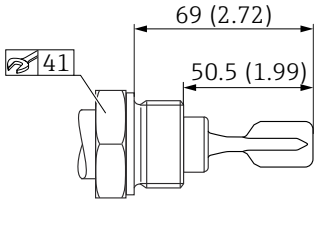

39 Thread ISO228 G 1. Unit of measurement mm (in)

Thread ASME B1.20.1, NPT

- Pressure rating: ≤ 100 bar (1 450 psi)
- Temperature: ≤ 150 °C (302 °F)
- Weight: 0.3 kg (0.66 lb)

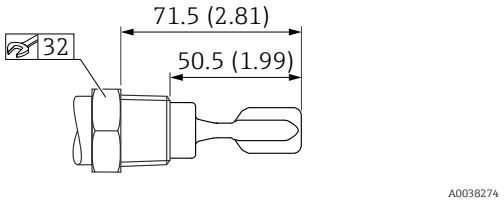

40 *Thread ASME B1.20.1, NPT ¾. Unit of measurement mm (in)*

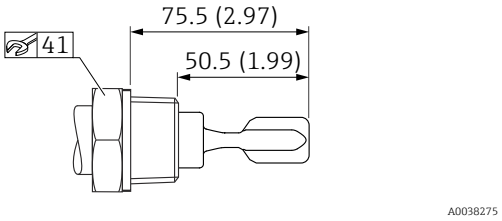

41 *Thread ASME B1.20.1, NPT 1. Unit of measurement mm (in)*

Thread EN10226, R

- Pressure rating: ≤ 100 bar (1 450 psi)
- Temperature: ≤ 150 °C (302 °F)
- Weight: 0.3 kg (0.66 lb)

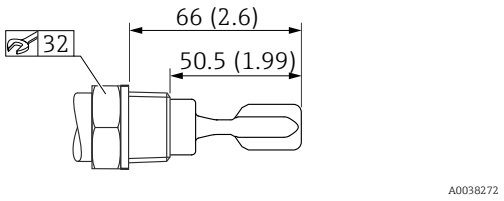

42 *Thread EN10226, R ¾. Unit of measurement mm (in)*

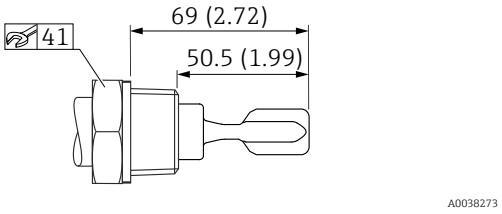

43 *Thread EN10226, R 1. Unit of measurement mm (in)*

Tri-Clamp

ISO2852 DN25-38 (1 to 1 ½"), DIN32676 DN25-40
- Pressure rating: ≤ 25 bar (363 psi)
- Temperature: ≤ 150 °C (302 °F)
- Weight: 0.22 kg (0.49 lb)

ISO2852 DN40-51 (2"), DIN32676 DN50
- Pressure rating: ≤ 25 bar (363 psi)
- Temperature: ≤ 150 °C (302 °F)
- Weight: 0.3 kg (0.66 lb)

The maximum temperature and the maximum pressure are dependent on the clamping ring and the seal used. The lowest value applies in each case.

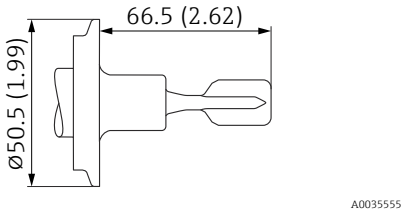

44 *Tri-Clamp 1 to 1 ½". Unit of measurement mm (in)*

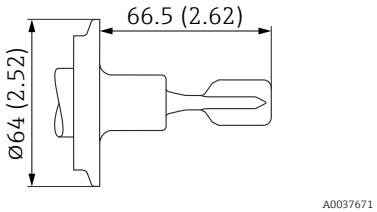

45 *Tri-Clamp 2". Unit of measurement mm (in)*

Flanges

Alloy C22-plated flanges are available for higher chemical resistance. The flange carrier material is made of 316L and is welded to an Alloy C22 disk.

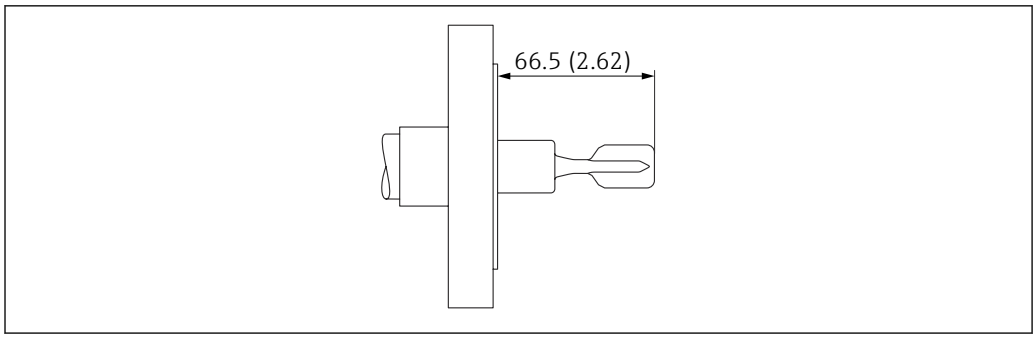

46 *Sample illustration. Unit of measurement mm (in)*

The raised face is smaller than described in the standard. However, a standard seal can be used.

ASME B16.5 flanges, RF

Pressure rating	Type	Material	Weight
Cl.150	NPS 1"	316/316L	1.0 kg (2.21 lb)
Cl.150	NPS 1-¼"	316/316L	1.2 kg (2.65 lb)
Cl.150	NPS 1-½"	316/316L	1.5 kg (3.31 lb)
Cl.150	NPS 2"	316/316L	2.4 kg (5.29 lb)
Cl.150	NPS 2"	Alloy C22>316/316L	2.4 kg (5.29 lb)
Cl.150	NPS 3"	316/316L	4.9 kg (10.8 lb)
Cl.150	NPS 4"	316/316L	7.0 kg (15.44 lb)
Cl.300	NPS 1"	316/316L	1.5 kg (3.31 lb)
Cl.300	NPS 1-¼"	316/316L	2.0 kg (4.41 lb)
Cl.300	NPS 1-½"	316/316L	2.7 kg (5.95 lb)
Cl.300	NPS 2"	316/316L	3.2 kg (7.06 lb)
Cl.300	NPS 3"	316/316L	6.8 kg (14.99 lb)
Cl.300	NPS 3"	Alloy C22>316/316L	6.8 kg (14.99 lb)
Cl.300	NPS 4"	316/316L	11.5 kg (25.6 lb)
Cl.600	NPS 2"	316/316L	4.2 kg (9.26 lb)
Cl.600	NPS 3"	316/316L	6.8 kg (14.99 lb)

ASME B16.5 flanges, FF

Pressure rating	Type	Material	Weight
Cl.150	NPS 1"	316/316L	1.0 kg (2.21 lb)
Cl.150	NPS 2"	316/316L	2.4 kg (5.29 lb)
Cl.300	NPS 1-½"	316/316L	2.7 kg (5.95 lb)
Cl.300	NPS 2"	316/316L	3.2 kg (7.06 lb)

ASME B16.5 flanges, RTJ

Pressure rating	Type	Material	Weight
Cl.300	NPS 2"	316/316L	3.2 kg (7.06 lb)
Cl.300	NPS 3"	316/316L	7.2 kg (15.88 lb)

Pressure rating	Type	Material	Weight
Cl.300	NPS 4"	316/316L	11.5 kg (25.6 lb)
Cl.600	NPS 2"	316/316L	4.2 kg (9.26 lb)

EN flanges EN 1092-1, A

Pressure rating	Type	Material	Weight
PN6	DN32	316L (1.4404)	1.2 kg (2.65 lb)
PN6	DN40	316L (1.4404)	1.4 kg (3.09 lb)
PN6	DN50	316L (1.4404)	1.6 kg (3.53 lb)
PN10/16	DN50	316L (1.4404)	2.9 kg (6.39 lb)
PN10/16	DN80	316L (1.4404)	4.8 kg (10.58 lb)
PN10/16	DN100	316L (1.4404)	5.6 kg (12.35 lb)
PN25/40	DN25	316L (1.4404)	1.3 kg (2.87 lb)
PN25/40	DN32	316L (1.4404)	2.0 kg (4.41 lb)
PN25/40	DN40	316L (1.4404)	2.4 kg (5.29 lb)
PN25/40	DN50	316L (1.4404)	3.2 kg (7.06 lb)
PN25/40	DN65	316L (1.4404)	4.3 kg (9.48 lb)
PN25/40	DN80	316L (1.4404)	5.9 kg (13.01 lb)
PN25/40	DN100	316L (1.4404)	7.5 kg (16.54 lb)
PN100	DN50	316L (1.4404)	5.5 kg (12.13 lb)

EN flanges EN 1092-1, B1

Pressure rating	Type	Material	Weight
PN6	DN32	316L (1.4404)	1.2 kg (2.65 lb)
PN6	DN50	316L (1.4404)	1.6 kg (3.53 lb)
PN6	DN50	Alloy C22>316L	1.6 kg (3.53 lb)
PN10/16	DN50	316L (1.4404)	2.7 kg (6.02 lb)
PN10/16	DN100	316L (1.4404)	5.6 kg (12.35 lb)
PN10/16	DN100	Alloy C22>316L	5.6 kg (12.35 lb)
PN25/40	DN25	316L (1.4404)	1.4 kg (3.09 lb)
PN25/40	DN25	Alloy C22>316L	1.4 kg (3.09 lb)
PN25/40	DN40	316L (1.4404)	1.3 kg (2.93 lb)
PN25/40	DN50	316L (1.4404)	3.2 kg (7.06 lb)
PN25/40	DN50	Alloy C22>316L	3.2 kg (7.06 lb)
PN25/40	DN80	316L (1.4404)	5.9 kg (13.01 lb)
PN25/40	DN80	Alloy C22>316L	5.2 kg (11.47 lb)
PN100	DN50	316L (1.4404)	5.5 kg (12.13 lb)

EN flanges EN 1092-1, C

Pressure rating	Type	Material	Weight
PN25/40	DN50	316L (1.4404)	3.2 kg (7.06 lb)

EN flanges EN 1092-1, D

Pressure rating	Type	Material	Weight
PN25/40	DN50	316L (1.4404)	3.2 kg (7.06 lb)

EN flanges EN 1092-1, E

Pressure rating	Type	Material	Weight
PN25/40	DN50	316L (1.4404)	3.2 kg (7.06 lb)

JIS flanges B2220

Pressure rating	Type	Material	Weight
10K	10K 25A	316L (1.4404)	1.3 kg (2.87 lb)
10K	10K 40A	316L (1.4404)	1.5 kg (3.31 lb)
10K	10K 50A	316L (1.4404)	1.7 kg (3.75 lb)
10K	10K 50A	AlloyC22>316L	1.7 kg (3.75 lb)
10K	10K 80A	316L (1.4404)	2.2 kg (4.85 lb)
10K	10K 100A	316L (1.4404)	2.8 kg (6.17 lb)

Weight

Housing
Weight including electronics and display (graphic display):

Single compartment housing
- Plastic: 0.5 kg (1.10 lb)
- Aluminum, coated: 1.2 kg (2.65 lb)
- 316L, hygienic: 1.2 kg (2.65 lb)

Dual compartment housing, L-shaped
- Aluminum, coated: 1.7 kg (3.75 lb)
- 316L: 4.3 kg (9.48 lb)

Temperature spacer
0.6 kg (1.32 lb)

Pressure-tight feedthrough
0.7 kg (1.54 lb)

Ex d glass feedthrough
0.5 kg (1.10 lb)

Pipe extension
- 1000 mm: 0.9 kg (1.98 lb)
- 50 in: 1.15 kg (2.54 lb)

Process connection

See "Process connections" section

Protective cover, plastic
0.2 kg (0.44 lb)

Protective cover, 316L
0.93 kg (2.05 lb)

Materials

Materials in contact with process

Process connection and pipe extension

316L (1.4404 or 1.4435)
Optional Alloy C22 (2.4602)

Tuning fork

316L (1.4435)
Optional Alloy C22 (2.4602)

Flanges

- Flanges, process connections
- Flange plating: Alloy C22 (2.4602)

Seals

Flat seal for process connection G ¾ or G 1: fiber-reinforced elastomer seal, asbestos-free according to DIN 7603

Scope of delivery with flat seal according to DIN7603
- Metric thread G ¾, G 1 standard
- Metric thread G ¾, G 1 for installation in weld-in adapter

Scope of delivery without seal
- Tri-Clamp
- Flanges
- R and NPT thread

Materials not in contact with process

Single compartment housing, plastic

- Housing: PBT/PC
- Dummy cover: PBT/PC
- Cover with sight glass: PBT/PC and PC
- Cover seal: EPDM
- Potential equalization: 316L
- Seal under potential equalization: EPDM
- Plug: PBT-GF30-FR
- Seal on plug: EPDM
- Nameplate: plastic foil
- TAG plate: plastic foil, metal or provided by the customer

The cable entry with material specification can be ordered via the product structure "Electrical connection".

Single-compartment housing, aluminum, coated

- Housing: EN AC 43400 aluminum (Cu max. 0.1%)
- Housing coating, cover: polyester
- EN AC 43400 aluminum cover (Cu max. 0.1%) with Lexan 943A PC sight glass
  EN AC 43400 aluminum cover (Cu max. 0.1%) with borosilicate sight glass; for Ex d/XP, dust Ex
- Dummy cover: EN AC 43400 aluminum (Cu max. 0.1%)
- Cover sealing materials: HNBR
- Cover sealing materials: FVMQ (in low temperature version only)
- Plug: PBT-GF30-FR or aluminum
- Plug sealing material: EPDM
- Nameplate: plastic foil
- TAG plate: plastic foil, stainless steel or provided by the customer

The cable entry with material specification can be ordered via the product structure "Electrical connection".

Single compartment housing, 316L, hygienic

- Housing: stainless steel 316 L (1.4404)
- Dummy cover: stainless steel 316 L (1.4404)
- Cover stainless steel 316 L (1.4404) with PC Lexan 943A sight glass
  Cover stainless steel 316 L (1.4404) with borosilicate sight glass; can optionally be ordered as a mounted accessory
- Cover sealing materials: VMQ
- Potential equalization: 316L
- Seal under potential equalization: EPDM
- Plug: PBT-GF30-FR or stainless steel

- Plug sealing material: EPDM
- Nameplate: stainless steel housing labeled directly
- TAG plate: plastic foil, stainless steel or provided by the customer

The cable entry with material specification can be ordered via the product structure "Electrical connection".

Dual-compartment housing, L-shaped, aluminum, coated

- Housing: EN AC 43400 aluminum (Cu max. 0.1%)
- Housing coating, cover: polyester
- EN AC 43400 aluminum cover (Cu max. 0.1%) with Lexan 943A PC sight glass
  EN AC 43400 aluminum cover (Cu max. 0.1%) with borosilicate sight glass; for Ex d/XP, dust Ex
- Dummy cover: EN AC 43400 aluminum (Cu max. 0.1%)
- Cover sealing materials: HNBR
- Cover sealing materials: FVMQ (in low temperature version only)
- Plug: PBT-GF30-FR or aluminum
- Plug sealing material: EPDM
- Nameplate: plastic foil
- TAG plate: plastic foil, stainless steel or provided by the customer

The cable entry with material specification can be ordered via the product structure "Electrical connection".

Dual compartment housing, L-shaped, 316L

- Housing: stainless steel AISI 316L (1.4409)
  Stainless steel (ASTM A351 : CF3M (cast equivalent to material AISI 316L)/EN 10213 : 1.4409)
- Dummy cover: stainless steel AISI 316L (1.4409)
- Cover: stainless steel AISI 316L (1.4409) with borosilicate sight glass
- Cover sealing materials: HNBR
- Cover sealing materials: FVMQ (in low temperature version only)
- Plug: stainless steel
- Plug sealing material: EPDM
- Nameplate: stainless steel housing labeled directly
- TAG plate: plastic foil, stainless steel or provided by the customer

The cable entry with material specification can be ordered via the product structure "Electrical connection".

Wired-on nameplate

- Stainless steel
- Plastic film
- Provided by customer
- RFID tag: polyurethane potting compound

Electrical connection

Coupling M20, plastic
- Material: PA
- Seal on cable gland: EPDM
- Dummy plug: plastic

Coupling M20, nickel-plated brass
- Material: nickel-plated brass
- Seal on cable gland: EPDM
- Dummy plug: plastic

Coupling M20, 316L
- Material: 316L
- Seal on cable gland: EPDM
- Dummy plug: plastic

M20 thread
The device is supplied with M20 thread as standard.
Transport plug: LD-PE

Thread G ½
The device is supplied as standard with an M20 thread and an enclosed adapter to G ½ including documentation (aluminum housing, 316L housing, hygienic housing) or with a mounted adapter to G ½ (plastic housing).
- Adapter made of PA66-GF or aluminum or 316L (depends on housing version ordered)
- Transport plug: LD-PE

NPT ½ thread
The device is supplied as standard with an NPT ½ thread (aluminum housing, 316L housing) or with a mounted adapter to NPT ½ (plastic housing, hygienic housing).
- Adapter made of PA66-GF or 316L (depends on housing version ordered)
- Transport plug: LD-PE

M12 plug
- Material: nickel-plated CuZn or 316L (depends on housing version ordered)
- Transport cap: LD-PE

Surface roughness

The surface roughness of the surface in contact with the process is Ra ≤3.2 µm (126 µin).

Operability

Operation concept

Operator-oriented menu structure for user-specific tasks
- Guidance
- Diagnostics
- Application
- System

Fast and safe commissioning
- Interactive wizard with graphical user interface for guided commissioning in FieldCare, DeviceCare or DTM, AMS and PDM-based third-party tools or SmartBlue
- Menu guidance with brief descriptions of the individual parameter functions
- Standardized operation at the device and in the operating tools
- PROFINET over Ethernet-APL: access to the device via web server

Integrated HistoROM data memory
- Adoption of data configuration when electronics modules are replaced
- Up to 100 event messages recorded in the device

Efficient diagnostic behavior increases measurement reliability
- Remedial action is integrated in plain text
- Diverse simulation options

Bluetooth® wireless technology (optionally integrated in local display)
- Quick and easy setup with SmartBlue app or PC with DeviceCare, version 1.07.05 and higher, or Field Xpert SMT70
- No additional tools or adapters required
- Encrypted single point-to-point data transmission (tested by Fraunhofer Institute) and password-protected communication via Bluetooth® wireless technology

Languages

Local display

The operating language of the local display (optional) can be selected via the Product Configurator.

If a different language was not selected, the local display is delivered from the factory with English.

The operating language can be changed subsequently via the **Language** parameter.

Local operation

FEL60H electronic insert - HART

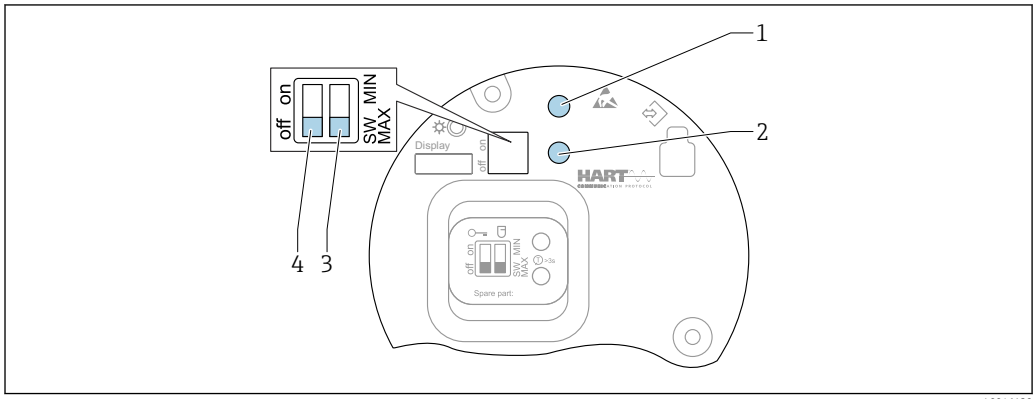

47 Operating keys and DIP switch on FEL60H electronic insert

1 Operating key for reset password
1+2 Operating keys for device reset (as-delivered state)
2 Operating key for Proof test
3 DIP switch for safety function
4 DIP switch for locking and unlocking the device

1: Operating key for reset password:
- For login via Bluetooth® wireless technology
- For Maintenance user role

1 + 2: Operating keys for resetting the device:
- Reset the device to the order configuration
- Press both keys 1 + 2 simultaneously

2: Operating key for Proof test:
- The output changes from the OK status to demand mode
- Press the key for > 3 s

3: DIP switch for safety function:
- SW: When the switch is set to "SW", the MIN or MAX setting is defined by the software (MAX = default value)
- MIN: In the MIN switch position, the value is permanently set to MIN irrespective of the software

4: Overview of the operating keys and DIP switch functions:
- Switch position on: Device locked
- Switch position off: Device unlocked

The minimum detection and maximum detection operating modes can be switched directly on the electronic insert:
- MIN (minimum detection): when the vibrating fork is uncovered, the output switches to demand mode, e.g. use to prevent pumps from running dry
- MAX (maximum detection): when the vibrating fork is covered, the output switches to demand mode, e.g. use as overfill protection system

The setting of the DIP switches on the electronic insert has priority over the settings made via other operation methods (e.g. FieldCare/DeviceCare).

Density switchover: A density preset can be ordered as an option or configured via the display, Bluetooth® wireless technology and HART.

Electronic insert (FEL60P) - Ethernet-APL

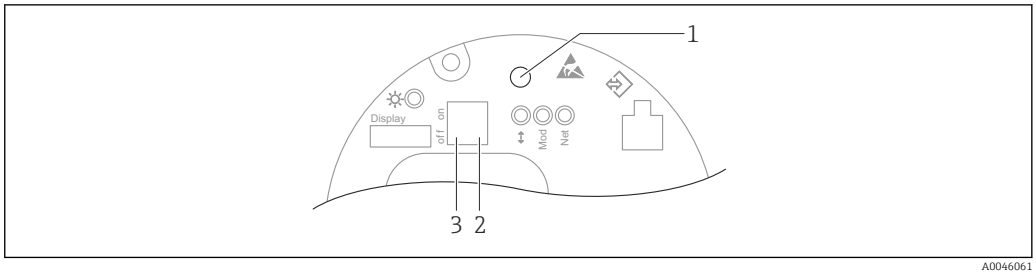

A0046061

48 *Operating key and DIP switches on the electronic insert (FEL60P) - Ethernet-APL*

1 *Operating key for Reset password and Reset device*
2 *DIP switch for setting the service IP address*
3 *DIP switch for locking and unlocking the device*

The setting of the DIP switches on the electronic insert has priority over the settings made via other operation methods (e.g. FieldCare/DeviceCare).

Local display

Device display (optional)

Functions:
- Display measured values along with fault and notice messages
- Background lighting, which switches from green to red in the event of an error
- The device display can be removed for easier operation

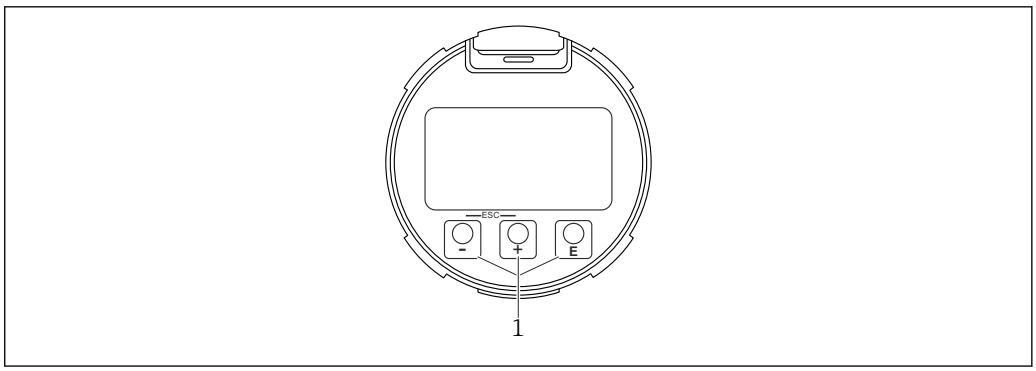

A0039284

49 *Graphic display with optical operating keys (1)*

Remote operation

Via 2-wire 4–20 mA HART protocol or Bluetooth® wireless technology

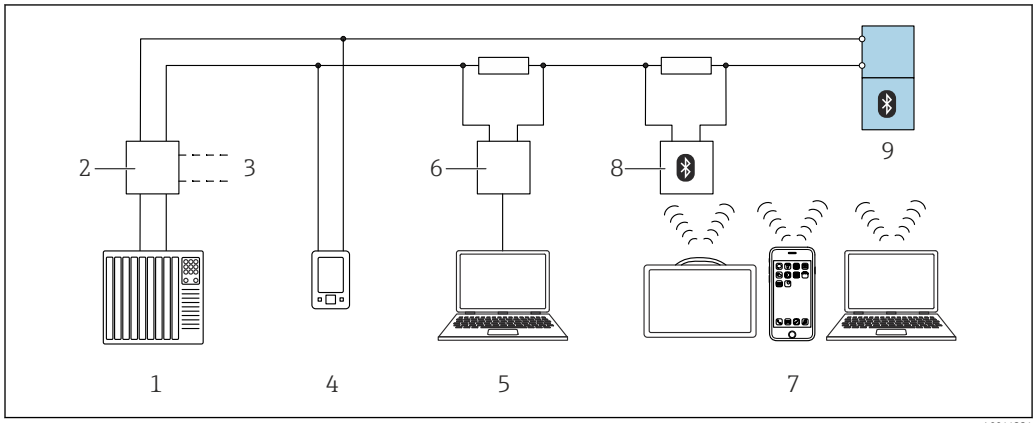

50 Options for remote operation via HART protocol

1 *PLC (programmable logic controller)*
2 *Transmitter power supply unit, e.g. RN42 (with communication resistor)*
3 *Connection for Commubox FXA195 and AMS Trex™ device communicator*
4 *AMS Trex™ device communicator*
5 *Computer with operating tool (e.g. DeviceCare/FieldCare , AMS Device View, SIMATIC PDM)*
6 *Commubox FXA195 (USB)*
7 *Field Xpert, smartphone or computer with operating tool (e.g. DeviceCare)*
8 *Bluetooth® modem with connecting cable (e.g. VIATOR)*
9 *Transmitter*

Via PROFINET over Ethernet-APL network

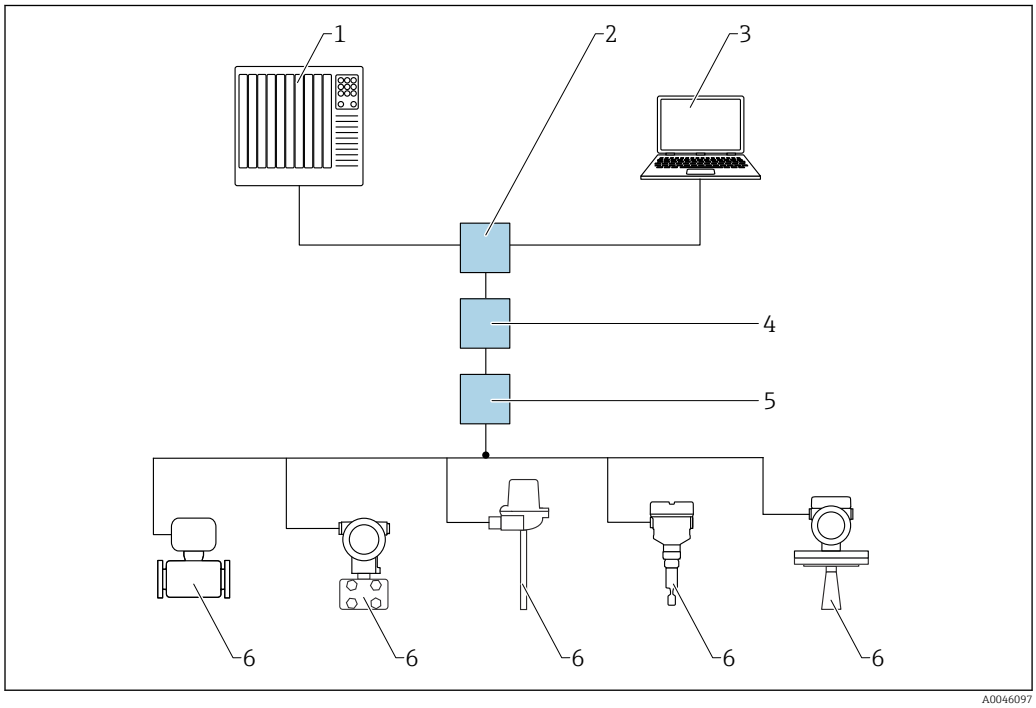

51 Options for remote operation via PROFINET over Ethernet-APL network: star topology

1 *Automation system, e.g. Simatic S7 (Siemens)*
2 *Ethernet switch*
3 *Computer with web browser (e.g., Microsoft Edge) for accessing the integrated device web server or computer with operating tool (e.g. FieldCare, DeviceCare, SIMATIC PDM) with iDTM PROFINET Communication*
4 *APL power switch (optional)*
5 *APL field switch*
6 *APL field device*

Call up the website via the computer in the network. The IP address of the device must be known.

The IP address can be assigned to the device in a variety of ways:
- Dynamic Configuration Protocol (DCP), factory setting
  The IP address is automatically assigned to the device by the automation system (e.g. Siemens S7)
- Software addressing
  The IP address is entered via the **IP address** parameter
- DIP switch for service
  The device then has the fixed assigned IP address IP address 192.168.1.212
  ℹ The IP address is only adopted after a restart.
  The IP address can now be used to establish the network connection

The default setting is that the device uses the Dynamic Configuration Protocol (DCP). The device's IP address is automatically assigned by the automation system (e.g. Siemens S7).

Via Web browser (for devices with PROFINET)

Function scope

Thanks to the integrated Web server the device can be operated and configured via a Web browser. The structure of the operating menu is the same as for the local display. In addition to the measured values, device status information is also displayed and allows users to monitor the status of the device. Furthermore the device data can be managed and the network parameters can be configured.

Via service interface (CDI)

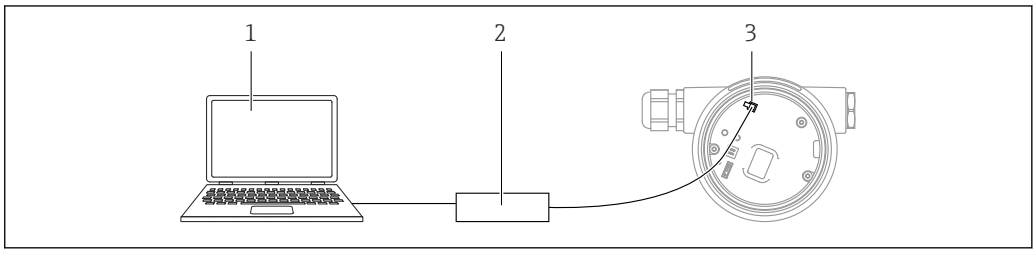

A0039148

1 *Computer with FieldCare/DeviceCare operating tool*
2 *Commubox*
3 *Service interface (CDI) of the device (= Endress+Hauser Common Data Interface)*

Operation via Bluetooth® wireless technology (optional)

Prerequisite
- Measuring instrument with display including Bluetooth® wireless technology
- Smartphone or tablet with Endress+Hauser SmartBlue app or PC with DeviceCare from version 1.07.05 or FieldXpert SMT70

The connection has a range of up to 25 m (82 ft). The range can vary depending on environmental conditions such as attachments, walls or ceilings.

ℹ The operating keys on the display are locked as soon as the device is connected via Bluetooth.

Supported operating tools

Smartphone or tablet with Endress+Hauser SmartBlue app, DeviceCare as of version 1.07.05, FieldCare, DTM, AMS and PDM.

PC with Web server via fieldbus protocol.

System integration

HART

Version 7

PROFINET over Ethernet-APL

PROFINET Profile 4.02

HistoROM data management

When replacing the electronic insert, the stored data is transferred by reconnecting the HistoROM.

The device serial number is saved in the HistoROM. The electronics serial number is saved in the electronics.

Certificates and approvals

Current certificates and approvals for the product are available at www.endress.com on the relevant product page:

1. Select the product using the filters and search field.
2. Open the product page.
3. Select **Downloads**.

The features described in this section depend on the selected product configuration.

CE mark

The measuring system meets the legal requirements of the applicable EU Directives. These are listed in the corresponding EU Declaration of Conformity together with the standards applied. Endress +Hauser confirms successful testing of the device by affixing to it the CE mark.

RCM marking

The supplied product or measuring system meets the ACMA (Australian Communications and Media Authority) requirements for network integrity, interoperability, performance characteristics as well as health and safety regulations. Here, especially the regulatory arrangements for electromagnetic compatibility are met. The products bear the RCM marking on the nameplate.

A0029561

Ex approval

All data relating to explosion protection are provided in separate Ex documentation and are available from the Downloads Area. The Ex documentation is supplied as standard with all devices approved for use in explosion hazardous areas.

Explosion-protected smartphones and tablets

If used in hazardous areas, mobile devices with an Ex approval must be used.

Corrosion test

Standards and test methods:
- 316L: ASTM A262 Practice E and ISO 3651-2 Method A
- Alloy C22 and Alloy C276: ASTM G28 Practice A and ISO 3651-2 Method C
- 22Cr duplex, 25Cr duplex: ASTM G48 Practice A or ISO 17781 and ISO 3651-2 Method C

The corrosion test is confirmed for all wetted and pressure-bearing parts.

A 3.1 material certificate must be ordered as confirmation of the test.

General material compliance

Endress+Hauser guarantees compliance with all relevant laws and regulations, including the current guidelines for materials and substances.

Examples:
- RoHS
- China RoHS
- REACH
- POP VO (Stockholm Convention)

For further information and general declarations of compliance, see the Endress+Hauser website www.endress.com

Overfill protection system

Before mounting the device, observe the documentation from the WHG approvals (German Federal Water Act).

Approved for overfill protection systems and leakage detection.

Product Configurator: feature "Additional approval"

Functional safety

In combination with HART:

The device has been developed according to the IEC 61508 standard. The device is suitable for overfill protection systems and dry-run protection up to SIL 2 (SIL 3 with homogeneous redundancy).

A detailed description of the safety functions with the device, settings and functional safety data are provided in the "Functional Safety Manual" on the Endress+Hauser website: www.endress.com → Downloads.

Product Configurator: feature "Additional approval"

Subsequent confirmation of usability according to IEC 61508 is not possible.

Radio approval

Further information and currently available documentation can be found on the Endress+Hauser website: www.endress.com → Downloads.

CRN approval

Device versions with a CRN approval (Canadian Registration Number) are listed in the corresponding registration documents. CRN-approved devices are marked with a registration number.

Any restrictions regarding the maximum process pressure values are listed on the CRN certificate.

Product Configurator: feature "Additional approval"

Pressure equipment with permitted pressure less than 200 bar, no pressure-bearing volume

Pressure instruments with a process connection that does not have a pressurized housing do not fall within the scope of the Pressure Equipment Directive, irrespective of the maximum working pressure.

If pressure equipment does not have a pressure-bearing housing, there is no pressure accessory present within the meaning of the Directive.

Druckgeräterichtlinie DGRL (PED) 2014/68/EU, Artikel 2, Absatz 5

Process seal as per ANSI/ISA 12.27.01

North American practice for the installation of process seals.

In accordance with ANSI/ISA 12.27.01, Endress+Hauser devices are designed as either single seal or dual seal devices with a warning message. This allows the user to forego the use of - and save the cost of installing - an external secondary process seal in the mating pipe as required in ANSI/NFPA 70 (NEC) and CSA 22.1 (CEC).

These instruments comply with the North American installation practice and provide a very safe and cost-saving installation for pressurized applications with hazardous fluids.

Please refer to the Safety Instructions (XA) of the relevant device for further information.

EAC conformity

The measuring system meets the legal requirements of the applicable EAC guidelines. These are listed in the corresponding EAC Declaration of Conformity along with the standards applied.

The manufacturer confirms successful testing of the device by affixing to it the EAC mark.

ASME B 31.3/31.1

Design and materials in accordance with ASME B31.3/31.1. The welds are through-penetration welded and meet the requirements of the ASME Boiler and Pressure Vessel Code, Section IX and EN ISO 15614-1.

HART certification

HART interface

The measuring instrument is certified and registered by the FieldComm Group. The measuring system meets all the requirements of the following specifications:
- Certified according to HART 7
- The device can also be operated with certified devices of other manufacturers (interoperability)

PROFINET over Ethernet-APL certification

PROFINET interface

The device is certified and registered by the PNO (PROFIBUS Nutzerorganisation e. V.). The measuring system meets all the requirements of the following specifications:
- Certified according to:
  - Test specification for PROFINET devices
  - PROFINET PA Profile 4.02
  - PROFINET Netload Robustness Class 2 10 Mbit/s
  - APL conformance test
- The device can also be operated with certified devices of other manufacturers (interoperability)
- The device supports PROFINET S2 system redundancy.

Ordering information

Detailed ordering information is available from your nearest sales organization www.addresses.endress.com or in the Product Configurator at www.endress.com:

1. Select the product using the filters and search field.
2. Open the product page.
3. Select **Configuration**.

Product Configurator - the tool for individual product configuration
- Up-to-the-minute configuration data
- Depending on the device: direct input of information specific to the measuring point, such as the measuring range or operating language
- Automatic verification of exclusion criteria
- Automatic creation of the order code and its breakdown in PDF or Excel output format
- Ability to order directly in the Endress+Hauser Online Shop

Service

The following services, among others, can be selected using the Product Configurator:
- Cleaned of oil+grease (wetted)
- PWIS-free (paint-wetting impairment substances)
  The plastic protective cover and weld-in adapters are excluded from the PWIS cleaning
- ANSI safety red coating (housing cover)
- Switching delay setting to be spec.
- Setting for MIN safety mode
- Set HART burst mode PV
- Setting for max. alarm current
- Default density setting > 0.4 g/cm³ (25.0 lb/ft³)
- Default density setting > 0.5 g/cm³ (31.2 lb/ft³)
- Bluetooth communication is disabled on delivery

Test reports, declarations and inspection certificates

All test reports, declarations and inspection certificates are provided electronically in the *Device Viewer*:
Enter the serial number from the nameplate
(https://www.endress.com/de/pages/supporting-tools/device-viewer)

Product documentation on paper
Test reports, declarations and inspection certificates in hard copy can optionally be ordered with feature 570 "Service", Version I7 "Product documentation on paper". The documents are then provided with the device upon delivery.

Test, certificate, declaration

Versions can be selected for which the following certificates are available:
- Inspection certificate 3.1, EN10204 (material certificate, wetted parts)
- NACE MR0175 / ISO 15156 (wetted parts), declaration
- NACE MR0103 / ISO 17945 (wetted parts), declaration
- AD 2000 (wetted parts), declaration, excluding cast parts
- ASME B31.3 process piping, declaration
- ASME B31.1 process piping, declaration
- Pressure test, internal procedure, test report
- Helium leak test, internal procedure, test report
- PMI test, internal procedure (wetted parts), test report
- Penetrant testing AD2000-HP5-3 (PT), wetted/pressurized metallic parts, test report
- Penetrant testing ISO23277-1 (PT), wetted/pressurized metallic parts, test report
- Penetrant testing ASME VIII-1 (PT), wetted/pressurized metallic parts, test report
- Welding documentation, wetted/pressurized seams, declaration / ISO / ASME
  Welding documentation consisting of:
  - Welding drawing
  - WPQR (Welding Procedure Qualification Record) according to ISO 14613/ISO14614 or ASME Sect. IX
  - WPS (Welding Procedure Specifications)
  - WQR (Manufacturer Declaration for Welding Professionals' Qualifications)

Documentation currently available on the Endress+Hauser website: www.endress.com → Downloads or with the serial number of the device under Online Tools in the Device Viewer.

TAG

Measuring point (TAG)

The device can be ordered with a tag name.

Location of tag name
In the additional specification, select:
- Stainless steel tag plate
- Paper adhesive label
- TAG provided by the customer
- RFID tag
- RFID tag + stainless steel tag plate
- RFID tag + paper adhesive label
- RFID tag + tag provided by the customer
- IEC 61406 stainless steel tag
- IEC 61406 stainless steel + NFC tag
- IEC 61406 stainless steel tag, stainless steel tag
- IEC 61406 stainless steel tag + NFC, stainless steel tag
- IEC 61406 stainless steel tag, plate supplied
- IEC 61406 stainless steel tag + NFC, plate supplied

Definition of tag name
In the additional specification, specify:
Three lines of maximum 18 characters each
The specified tag name appears on the selected plate and/or on the RFID tag.

Visualization in SmartBlue app
The first 32 characters of the tag name
The tag name can always be changed specifically for the measuring point via Bluetooth.

Display in electronic nameplate (ENP)
The first 32 characters of the tag name

Application packages

Heartbeat Technology

Availability:
The Heartbeat Verification + Monitoring application package is optionally available for all device versions
The application package can be ordered together with the device or can be activated subsequently with an activation code.

SD02874F: Heartbeat Verification + Monitoring application package (HART)

SD03459F: Heartbeat Verification + Monitoring application package (PROFINET over Ethernet APL)

Heartbeat Technology module

Heartbeat Diagnostics
Continuously monitors and assesses the device condition and process conditions. Generates diagnostic messages when certain events occur and provides troubleshooting measures in accordance with NAMUR NE 107.

Heartbeat Verification
Performs a verification of the current device condition on demand and generates the Heartbeat Technology verification report showing the verification result.

Heartbeat Monitoring
Continuously provides device and/or process data for an external system. Analysis of this data provides a basis for process optimization and predictive maintenance.

Heartbeat Diagnostics

Diagnostic messages output to:
- the local display
- an asset management system (e.g. FieldCare or DeviceCare)
- an automation system (e.g. PLC)
- Web server

Heartbeat Verification

- Verification of device status in the installed state without interrupting the process
- Ensure measuring point reliability and documentation compliant to standards
- Verification on demand
- Clear measuring point analysis (Passed/Failed)
- High total test coverage within the framework of manufacturer specifications
- Compliance with regulatory requirements (e.g., ISO 9001:2015, Section 7.1.5.2)

"Heartbeat Verification" wizard:

- Integrated in the Heartbeat Verification module
- Operation via SmartBlue app, DTM, display
- Guides the user through the verification process step-by-step

Information contained in the verification report:

- Operating hours counter
- Temperature and frequency indicator
- Oscillation frequency in as-delivered state (in air) as reference value
- Oscillation frequency:
  - High oscillation frequency → Reference to corrosion
  - Reduced oscillation frequency → Note on buildup or covered sensor
    Deviations can be affected by the process temperature or process pressure
- Frequency history:
  Storage of last 16 sensor frequencies at the time of verification

Heartbeat Monitoring

- **Process window** wizard: Two frequency limits for monitoring the upper and lower range of the oscillation frequency (can be defined independently of one another). Changes in the process can be identified, e.g. corrosion or buildup.
- In combination with HART:
  Loop diagnostics wizard: Detection of elevated measuring circuit resistance values or declining power supply

Proof testing (HART)

Proof testing is only available for devices with HART communication that have a SIL or WHG (German Federal Water Act)approval.

A proof test is required at appropriate intervals in the following applications: SIL (IEC 61508/ IEC 61511), WHG (German Federal Water Act).

The **Proof test** wizard is available with the ordered SIL or WHG approval. The wizard guides the user through the entire process for creating the verification report. The verification report can be saved as a PDF file.

Accessories

The accessories currently available for the product can be selected at www.endress.com:

1. Select the product using the filters and search field.
2. Open the product page.
3. Select **Spare parts & Accessories**.

The accessories can be partially ordered via the "Accessory enclosed" product structure.

Device Viewer

All the spare parts for the device, along with the order code, are listed in the *Device Viewer* (www.endress.com/deviceviewer).

Weather protection cover: 316L, XW112

The weather protection cover can be ordered together with the device via the "Accessory enclosed" product structure.

It is used to protect against direct sunlight, precipitation and ice.

Weather protection cover 316L is suitable for the dual compartment housing made of aluminum or 316L. The delivery includes the holder for direct mounting on the housing.

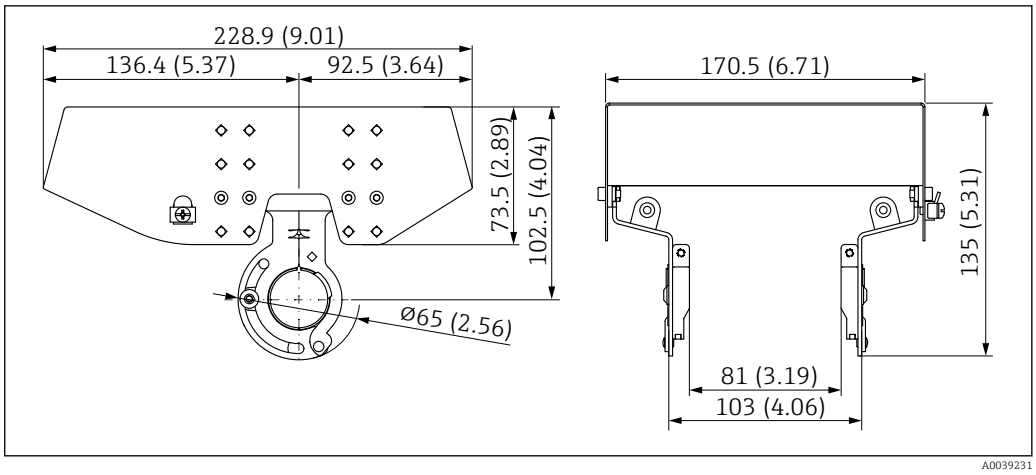

52 *Dimensions of weather protection cover, 316 L, XW112. Unit of measurement mm (in)*

Material
- Weather protection cover: 316L
- Clamping screw: A4
- Bracket: 316L

Accessory order code:
71438303

Special Documentation SD02424F

Weather protection cover, plastic, XW111

The weather protection cover can be ordered together with the device via the "Accessory enclosed" product structure.

It is used to protect against direct sunlight, precipitation and ice.

The plastic weather protection cover is suitable for the single compartment housing made of aluminum. The delivery includes the holder for direct mounting on the housing.

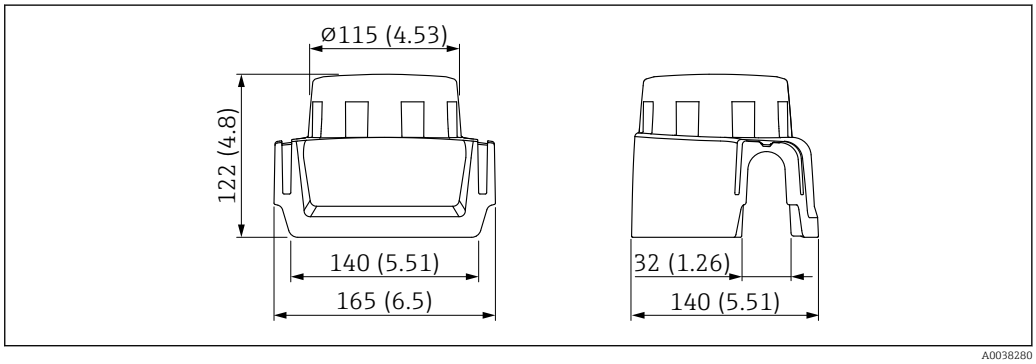

53 *Dimensions of weather protection cover, plastic, XW111. Unit of measurement mm (in)*

Material
Plastic

Accessory order code:
71438291

Special Documentation SD02423F

Weld-in adapter

Various weld-in adapters are available for installation in vessels or pipes. The adapters are optionally available with inspection certificate 3.1 EN 10204.

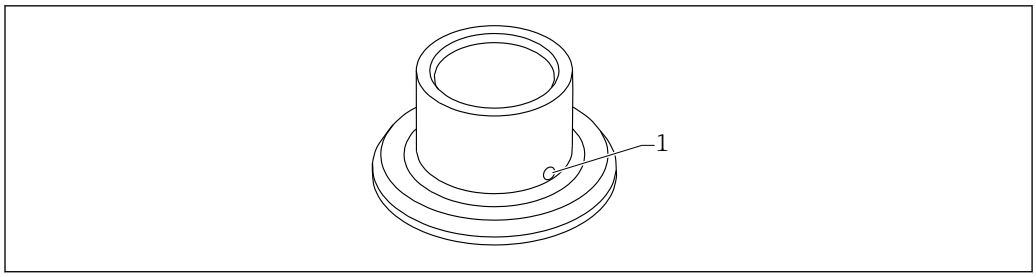

54 *Weld-in adapter (sample view)*

1 Leakage hole

Weld in the weld-in adapter in such a way that the leakage hole is pointing downwards. This enables any leaks to be detected quickly.

- G 1, Ø53 mounting on the pipe
- G 1, Ø60 flush mount on the vessel
- G ¾, Ø55 flush mount
- G 1 sensor adjustable

For detailed information, see "Technical Information" TI00426F (Weld-in adapters, process adapters and flanges)

Available in the Downloads area of the Endress+Hauser website (www.endress.com/downloads).

M12 socket

The M12 sockets listed are suitable for use in the temperature range −25 to 70 °C (−13 to 158 °F).

M12 socket IP69
- Terminated at one end
- Angled
- 5 m (16 ft) PVC cable (orange)
- Slotted nut 316L (1.4435)
- Body: PVC
- Order number: 52024216

M12 socket IP67
- Angled
- 5 m (16 ft) PVC cable (gray)
- Slotted nut Cu Sn/Ni
- Body: PUR
- Order number: 52010285

Sliding sleeves for unpressurized operation

Not suitable for use in explosive atmospheres.

Switch point, infinitely adjustable.

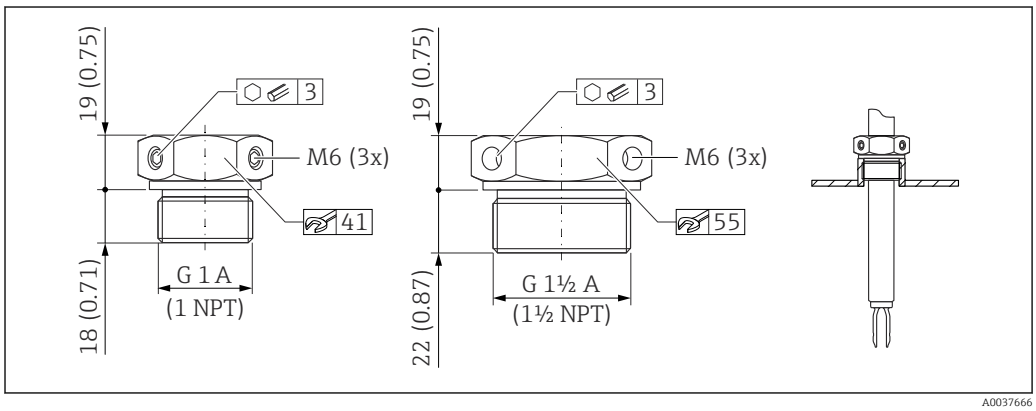

55 *Sliding sleeves for unpressurized operation p_e = 0 bar (0 psi). Unit of measurement mm (in)*

G 1, DIN ISO 228/I
- Material: 1.4435 (AISI 316L)
- Weight: 0.21 kg (0.46 lb)
- Order number: 52003978
- Order number: 52011888, approval: with inspection certificate EN 10204 - 3.1 material

NPT 1, ASME B 1.20.1
- Material: 1.4435 (AISI 316L)
- Weight: 0.21 kg (0.46 lb)
- Order number: 52003979
- Order number: 52011889, approval: with inspection certificate EN 10204 - 3.1 material

G 1½, DIN ISO 228/I
- Material: 1.4435 (AISI 316L)
- Weight: 0.54 kg (1.19 lb)
- Order number: 52003980
- Order number: 52011890, approval: with inspection certificate EN 10204 - 3.1 material

NPT 1½, ASME B 1.20.1
- Material: 1.4435 (AISI 316L)
- Weight: 0.54 kg (1.19 lb)
- Order number: 52003981
- Order number: 52011891, approval: with inspection certificate EN 10204 - 3.1 material

More detailed information and documentation are available:
- Product Configurator on the Endress+Hauser website www.endress.com
- Endress+Hauser Sales Organizationwww.addresses.endress.com

High pressure sliding sleeves

Suitable for use in explosive atmospheres.

- Switch point, infinitely adjustable
- Seal package made of graphite
- Graphite seal available as spare part 71078875
- For G 1, G 1½: seal is included in the delivery

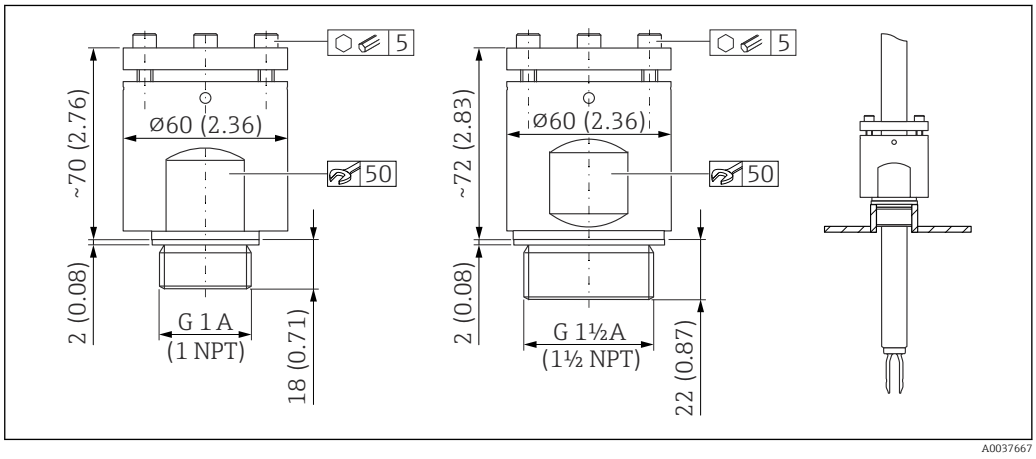

56 *High pressure sliding sleeves. Unit of measurement mm (in)*

G 1, DIN ISO 228/I
- Material: 1.4435 (AISI 316L)
- Weight: 1.13 kg (2.49 lb)
- Order number: 52003663
- Order number: 52011880, approval: with inspection certificate EN 10204 - 3.1 material

G 1, DIN ISO 228/I
- Material: AlloyC22
- Weight: 1.13 kg (2.49 lb)
- Approval: with inspection certificate EN 10204 - 3.1 material
- Order number: 71118691

NPT 1, ASME B 1.20.1
- Material: 1.4435 (AISI 316L)
- Weight: 1.13 kg (2.49 lb)
- Order number: 52003667
- Order number: 52011881, approval: with inspection certificate EN 10204 - 3.1 material

NPT 1, ASME B 1.20.1
- Material: AlloyC22
- Weight: 1.13 kg (2.49 lb)
- Approval: with inspection certificate EN 10204 - 3.1 material
- Order number: 71118694

G 1½, DIN ISO 228/1
- Material: 1.4435 (AISI 316L)
- Weight: 1.32 kg (2.91 lb)
- Order number: 52003665
- Order number: 52011882, approval: with inspection certificate EN 10204 - 3.1 material

G 1½, DIN ISO 228/1
- Material: AlloyC22
- Weight: 1.32 kg (2.91 lb)
- Approval: with inspection certificate EN 10204 - 3.1 material
- Order number: 71118693

NPT 1½, ASME B 1.20.1
- Material: 1.4435 (AISI 316L)
- Weight: 1.32 kg (2.91 lb)
- Order number: 52003669
- Order number: 52011883, approval: with inspection certificate EN 10204 - 3.1 material

NPT 1½, ASME B 1.20.1
- Material: AlloyC22
- Weight: 1.32 kg (2.91 lb)
- Approval: with inspection certificate EN 10204 - 3.1 material
- Order number: 71118695

More detailed information and documentation are available:
- Product Configurator on the Endress+Hauser website www.endress.com
- Endress+Hauser sales organization www.addresses.endress.com

Field Xpert SMT70

Universal, high-performance tablet PC for device configuration in Ex Zone 2 and non-Ex areas

Technical Information TI01342S

DeviceCare SFE100

Configuration tool for HART, PROFIBUS and FOUNDATION Fieldbus field devices

Technical Information TI01134S

FieldCare SFE500

FDT-based plant asset management tool

It can configure all smart field units in your system and helps you manage them. By using the status information, it is also a simple but effective way of checking their status and condition.

Technical Information TI00028S

Documentation

For an overview of the scope of the associated Technical Documentation, refer to the following:
- *Device Viewer* (www.endress.com/deviceviewer): Enter the serial number from the nameplate
- *Endress+Hauser Operations app*: Enter serial number from nameplate or scan matrix code on nameplate.

Standard documentation

Document type: Operating Instructions (BA)
Installation and initial commissioning – contains all functions in the operating menu that are required for a typical measuring task. Functions beyond this scope are not included.

Document type: Description of Device Parameters (GP)
The document is part of the Operating Instructions and serves as a reference for parameters, providing a detailed explanation of each individual parameter of the operating menu.

Document type: Brief Operating Instructions (KA)
Quick guide to the first measured value – includes all essential information from incoming acceptance to electrical connection.

Document type: Safety Instructions, certificates
Depending on the approval, Safety Instructions are supplied with the device, e.g. XA. This documentation is an integral part of the Operating Instructions.
The nameplate indicates which Safety Instructions (XA) apply to the device in question.

Supplementary device-dependent documentation

Additional documents are supplied depending on the device version ordered: Always comply strictly with the instructions in the supplementary documentation. The supplementary documentation is a constituent part of the device documentation.

Special Documentation

- SD02874F: Heartbeat Verification + Monitoring application package (HART)
- SD03459F: Heartbeat Verification + Monitoring application package (PROFINET over Ethernet APL)
- SD02530P: Remote operation via Bluetooth® wireless technology (radio approval, commissioning with Bluetooth® wireless technology)
- SD02398F: Sliding sleeve for Liquiphant (installation instructions)
- SD01622P: Weld-in adapter (installation instructions)
- TI00426F: Weld-in adapters, process adapters and flanges (overview)

Registered trademarks

HART®
Registered trademark of the FieldComm Group, Austin, Texas, USA

PROFINET®
Registered trademark of the PROFIBUS User Organization, Karlsruhe, Germany

Ethernet-APL™
- Ethernet-APL ADVANCED PHYSICAL LAYER
- Registered trademark of the PROFIBUS Nutzerorganisation e.V. (Profibus User Organization), Karlsruhe - Germany

Bluetooth®
The *Bluetooth®* word mark and logos are registered trademarks owned by the Bluetooth SIG, Inc. and any use of such marks by Endress+Hauser is under license. Other trademarks and trade names are those of their respective owners.

Apple®
Apple, the Apple logo, iPhone, and iPod touch are trademarks of Apple Inc., registered in the U.S. and other countries. App Store is a service mark of Apple Inc.

Android®
Android, Google Play and the Google Play logo are trademarks of Google Inc.

71783334

www.addresses.endress.com

Endress+Hauser

People for Process Automation