KA01480F/00/EN/05.26-00
71783248
2026-09-11

Brief Operating Instructions
Liquiphant FTL64

Vibronic
Level switch for liquids in high-temperature applications

These Brief Operating Instructions are not a substitute for the Operating Instructions. For further information on the product, see:

- www.endress.com/deviceviewer
- Smartphone/tablet: Endress+Hauser Operations app

Endress+Hauser
People for Process Automation

1 Related documentation

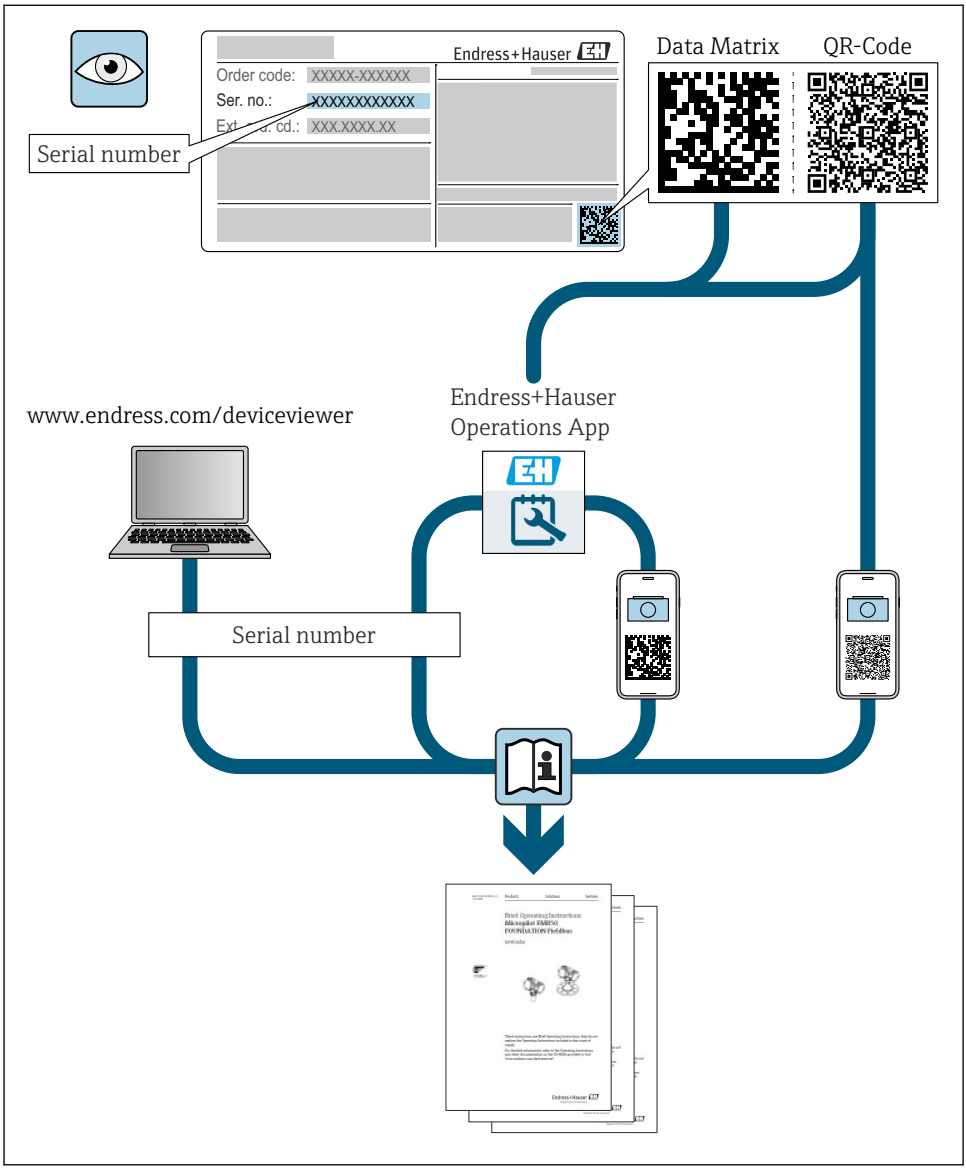

A0023555

2 Document information

2.1 Symbols

2.1.1 Safety symbols

DANGER

This symbol alerts you to a dangerous situation. Failure to avoid this situation will result in serious or fatal injury.

WARNING

This symbol alerts you to a potentially dangerous situation. Failure to avoid this situation can result in serious or fatal injury.

CAUTION

This symbol alerts you to a potentially dangerous situation. Failure to avoid this situation can result in minor or medium injury.

NOTICE

This symbol alerts you to a potentially harmful situation. Failure to avoid this situation can result in damage to the product or something in its vicinity.

2.1.2 Electrical symbols

Ground connection
Grounded clamp, which is grounded via a grounding system.

Protective earth (PE)
Ground terminals, which must be grounded prior to establishing any other connections. The ground terminals are located on the inside and outside of the device.

2.1.3 Tool symbols

Flat-blade screwdriver

Allen key

Open-ended wrench

2.1.4 Symbols for certain types of Information

Permitted
Procedures, processes or actions that are permitted.

Forbidden
Procedures, processes or actions that are forbidden.

Tip
Indicates additional information

Reference to documentation

Reference to another section

1., 2., 3. Series of steps

2.1.5 Symbols in graphics

A, B, C ... View

1, 2, 3 ... Item numbers

Hazardous area

Safe area (non-hazardous area)

3 Basic safety instructions

3.1 Requirements for the personnel

The personnel must fulfill the following requirements for its tasks:
- Trained, qualified specialists must have a relevant qualification for this specific function and task.
- Are authorized by the plant owner/operator.
- Are familiar with federal/national regulations.
- Before starting work, read and understand the instructions in the manual and supplementary documentation as well as the certificates (depending on the application).
- Follow instructions and comply with basic conditions.

3.2 Intended use

The device described in this manual is intended only for the level measurement of liquids.

Do not exceed or drop below the relevant limit values for the device
See the Technical Documentation

Incorrect use
The manufacturer is not liable for damage caused by improper or non-designated use.

Avoid mechanical damage:
- Do not touch or clean device surfaces with pointed or hard objects.

Clarification for borderline cases:
- For special media and fluids for cleaning, Endress+Hauser is glad to provide assistance in verifying the corrosion resistance of fluid-wetted materials, but does not accept any warranty or liability.

Residual risks
Due to the transfer of heat from the process and power dissipation within the electronics, the temperature of the housing may increase to up to 80 °C (176 °F) during operation. When in operation, the sensor can reach a temperature close to the medium temperature.

Danger of burns from contact with surfaces!
- In the event of elevated fluid temperatures, ensure protection against contact to prevent burns.

3.3 Workplace safety

For work on and with the device:
- ▶ Wear the required personal protective equipment according to federal/national regulations.

3.4 Operational safety

Damage to the device!
- ▶ Operate the device only if it is in proper technical condition, free from errors and faults.
- ▶ The operator is responsible for the trouble-free operation of the device.

Configuration, testing and maintenance work on the device

Process safety may be at risk during configuration, testing and maintenance work on the device.
- ▶ Alternative supervisory measures must be taken to guarantee the operational safety and process safety.

Modifications to the device

Unauthorized modifications to the device are not permitted and can lead to unforeseeable dangers.
- ▶ If modifications are nevertheless required, consult Endress+Hauser.

Repair

To ensure continued operational safety and reliability:
- ▶ Only perform repair work on the device if this is expressly permitted.
- ▶ Observe federal/national regulations pertaining to the repair of an electrical device.
- ▶ Use original spare parts and accessories from Endress+Hauser only.

Hazardous area

To eliminate danger to persons or the facility when the device is used in the hazardous area (e.g. explosion protection):
- ▶ Check the nameplate to verify if the device ordered can be put to its intended use in the hazardous area.
- ▶ Comply with the instructions in the separate supplementary documentation, which is an integral part of this manual.

3.5 Product safety

This state-of-the-art device is designed and tested in accordance with good engineering practice to meet operational safety standards. It left the factory in a condition in which it is safe to operate.

It meets general safety standards and legal requirements. It also complies with the EU directives listed in the device-specific EU declaration of conformity. The manufacturer confirms this by affixing the CE mark.

3.6 IT security

The manufacturer warranty is valid only if the product is installed and used as described in the Operating Instructions. The product features security mechanisms to protect it against any inadvertent changes to the settings. Security measures, which provide additional protection for the product and associated data transfer, must be implemented by the operators themselves in line with their security standards.

4 Incoming acceptance and product identification

4.1 Incoming acceptance

On receipt of the delivery:

1. Check the packaging for damage.
   ↳ Report all damage immediately to the manufacturer.
   Do not install damaged components.
2. Check the scope of delivery using the delivery note.
3. Compare the data on the nameplate with the order specifications on the delivery note.
4. Check the technical documentation and all other necessary documents, e.g. certificates, to ensure they are complete.

If one of the conditions is not satisfied, contact the manufacturer.

4.2 Product identification

The following options are available for identification of the device:
- Nameplate specifications
- Order code with breakdown of the device features on the delivery note
- Enter the serial numbers from the nameplates in *Device Viewer* (www.endress.com/deviceviewer): all the information about the device is displayed.

4.2.1 Nameplate

Do you have the correct device?

The nameplate provides you with the following information on the device:
- Manufacturer identification, device designation
- Order code
- Extended order code
- Serial number
- Tag name (TAG) (optional)
- Technical values such as supply voltage, current consumption, ambient temperature, communication-specific data (optional)

- Degree of protection
- Approvals with symbols
- Reference to Safety Instructions (XA) (optional)

▶ Compare the information on the nameplate with the order.

4.2.2 Electronic insert

Identify the electronic insert via the order code on the nameplate.

4.2.3 Manufacturer address

Endress+Hauser SE+Co. KG
Hauptstraße 1
79689 Maulburg, Germany

Place of manufacture: See nameplate.

4.3 Storage and transport

Use original packaging.

4.3.1 Storage temperature

−40 to +80 °C (−40 to +176 °F)
Optional: −50 °C (−58 °F), −60 °C (−76 °F)

4.3.2 Transporting the device

- Transport the device to the measuring point in the original packaging
- Hold the device by the housing, temperature spacer, process connection or extension pipe
- Do not bend, shorten or extend the tuning fork.

5 Installation

Mounting instructions
- Any orientation for compact version or version with a pipe length up to approx. 500 mm (19.7 in)
- Vertical orientation from above for device with long pipe
- Minimum distance between the vibrating fork and the tank wall or pipe wall: 10 mm (0.39 in)

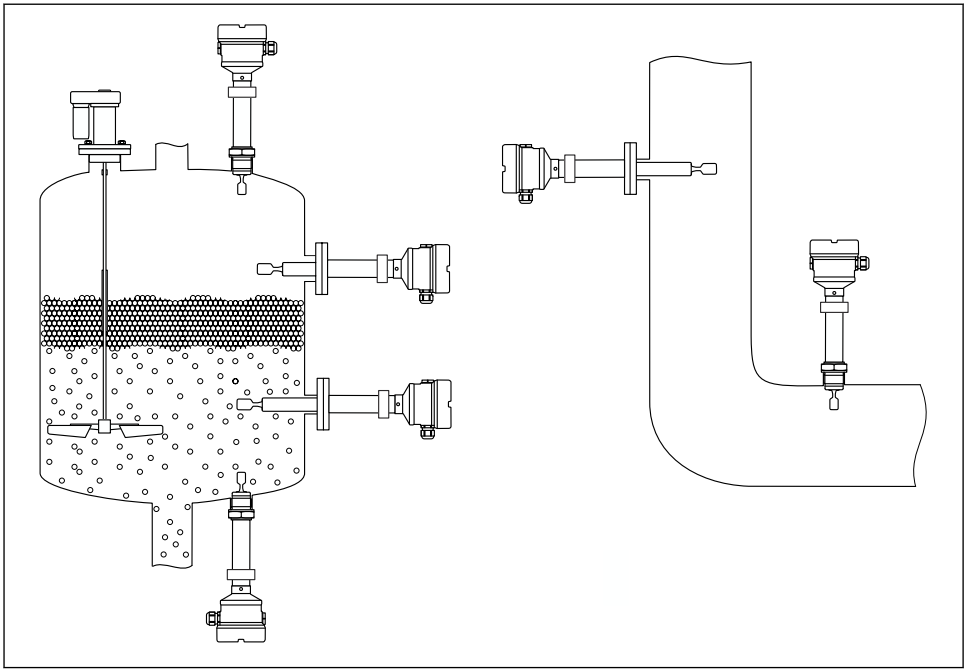

A0042329

1 *Installation examples for a vessel, tank or pipe*

5.1 Installation requirements

NOTICE

Scratches or impacts damage the coated surface of the device.

- Ensure the device is handled properly and professionally during all mounting work.

5.1.1 Taking the switch point into consideration

The following are typical switch points, depending on the orientation of the level switch

Water +23 °C (+73 °F)

Minimum distance between the tuning fork and the tank wall or pipe wall:
10 mm (0.39 in)

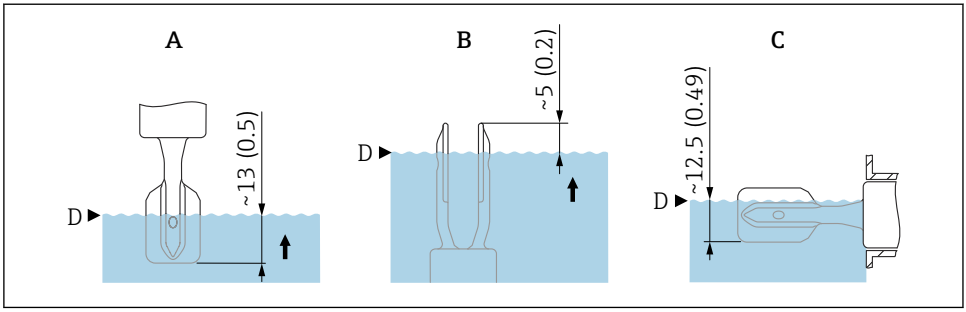

2 *Typical switch points. Unit of measurement mm (in)*

A Installation from above
B Installation from below
C Installation from the side
D Switch point

5.1.2 Take viscosity into consideration

Viscosity values
- Low viscosity : < 2 000 mPa·s
- High viscosity: > 2 000 to 10 000 mPa·s

Low viscosity

It is permitted to position the tuning fork within the installation socket.

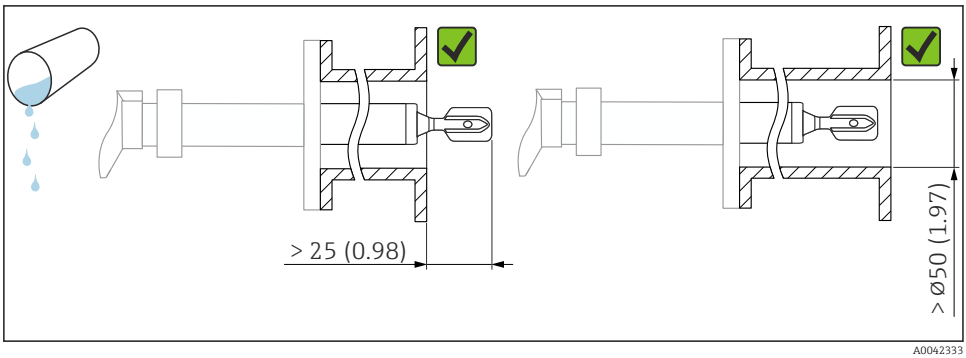

3 *Installation example for low-viscosity liquids. Unit of measurement mm (in)*

High viscosity

NOTICE

Highly viscous liquids may cause switching delays.

- ▶ Make sure that the liquid can run off the tuning fork easily.
- ▶ Deburr the socket surface.

The tuning fork must be located outside the installation socket!

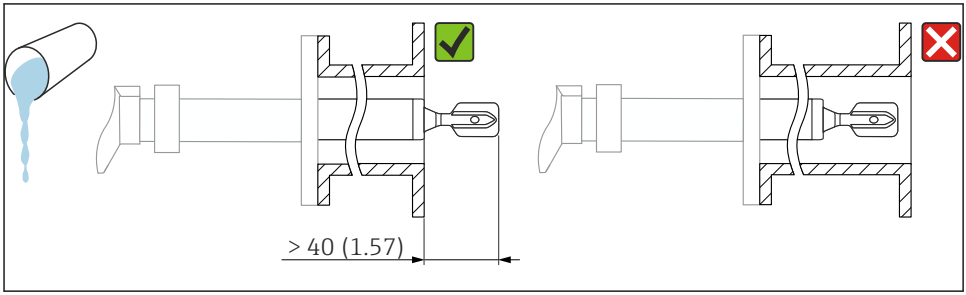

4 Installation example for a highly viscous liquid. Unit of measurement mm (in)

5.1.3 Avoid buildup

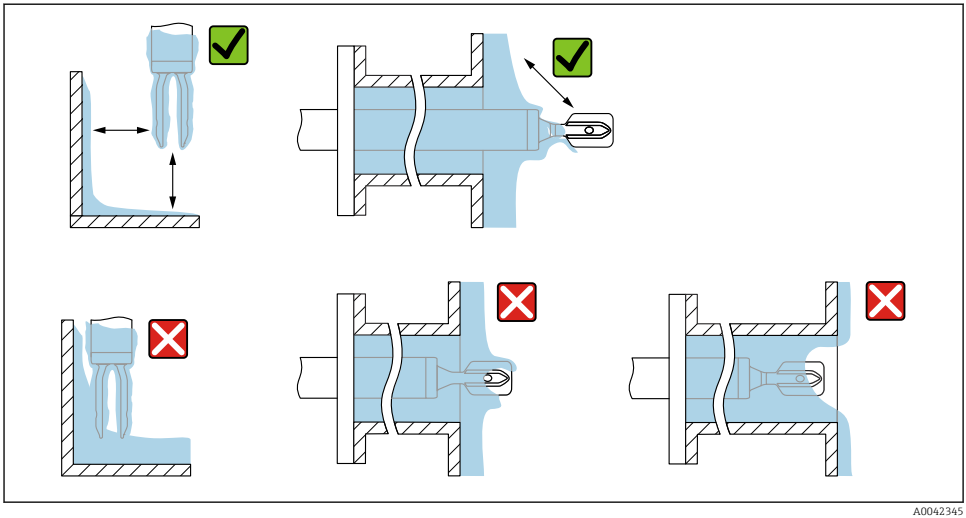

5 Installation examples for a highly viscous process medium

5.1.4 Take clearance into consideration

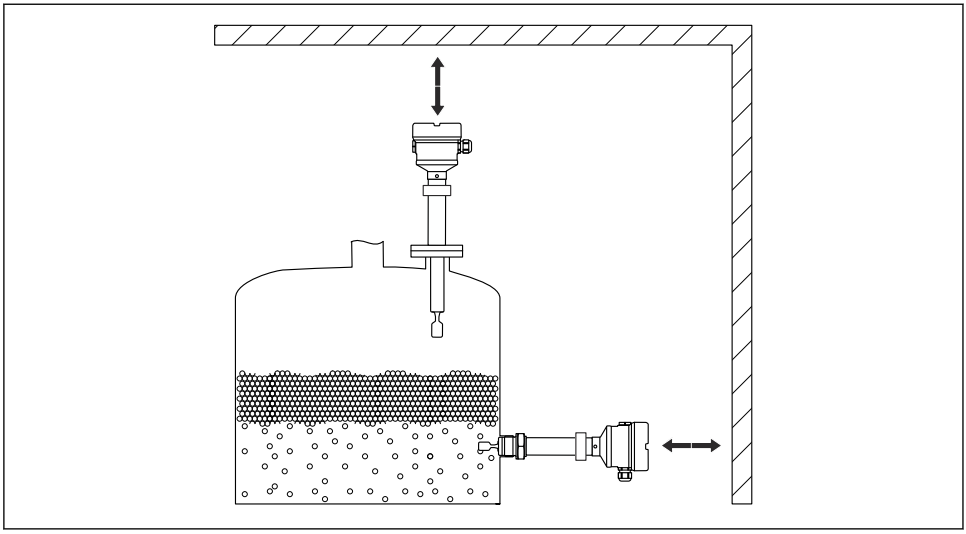

6 *Take clearance outside the tank into consideration*

5.1.5 Support the device

NOTICE

If the device is supported incorrectly, shocks and vibrations can damage the coated surface.

- Only use suitable supports.

Support the device in the event of severe dynamic load. Maximum lateral loading capacity of the pipe extensions and sensors: 75 Nm (55 lbf ft).

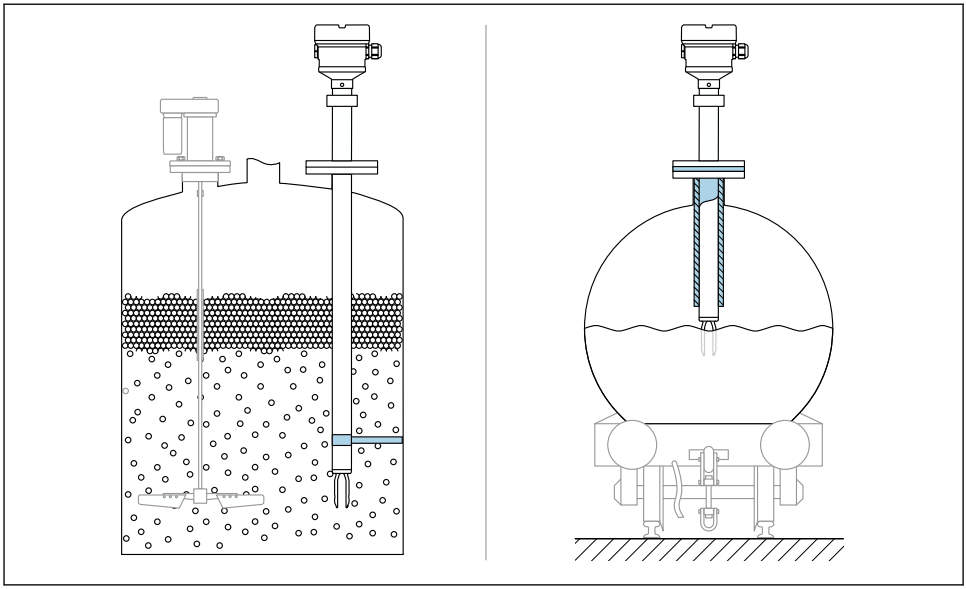

A0042356

7 *Examples of support in the event of dynamic load*

5.2 Installing the device

5.2.1 Required tool

- Open-ended wrench for sensor installation
- Allen key for housing locking screw

5.2.2 Installation

Aligning the vibrating fork using the marking

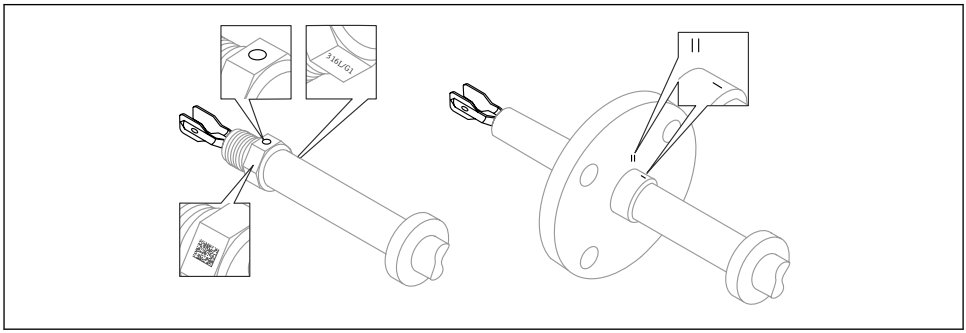

A0042348

8 *Position of the vibrating fork when installed horizontally in the vessel using the marking*

Installing the device in piping

- Flow velocity up to 5 m/s with a viscosity of 1 mPa·s and density of 1 g/cm³ (62.4 lb/ft³) (SGU).
  Check for correct functioning in the event of other process medium conditions.
- The flow will not be significantly impeded if the tuning fork is correctly aligned and the marking is pointing in the direction of flow.
- The marking is visible when installed

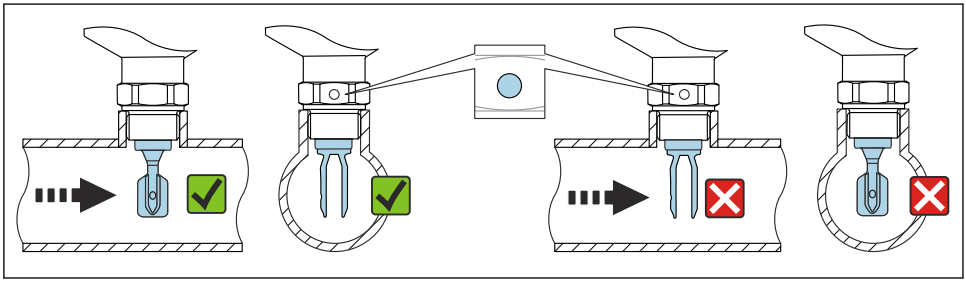

A0034851

9 *Installation in pipes (take fork position and marking into consideration)*

Screwing in the device

- Turn by the hex bolt only, 15 to 30 Nm (11 to 22 lbf ft)
- Do not turn at the housing!

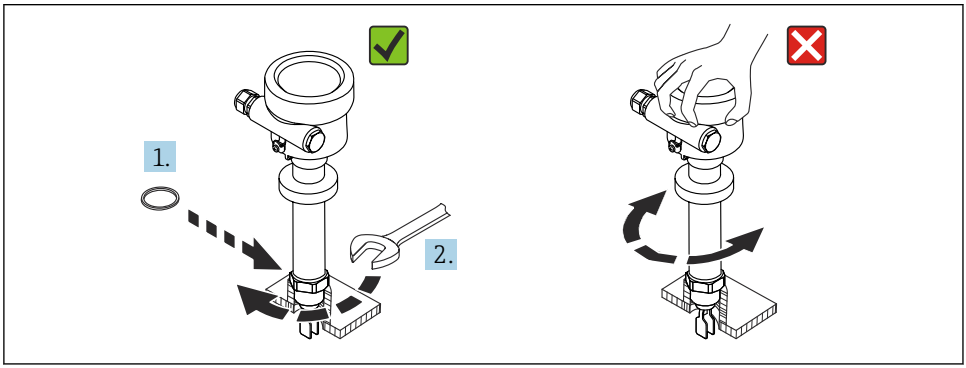

A0042423

10 *Screwing in the device*

Aligning the cable entry

All housings can be aligned. Forming a drip loop on the cable prevents moisture from entering the housing.

Housing without set screw

The device housing can be rotated up to 350°.

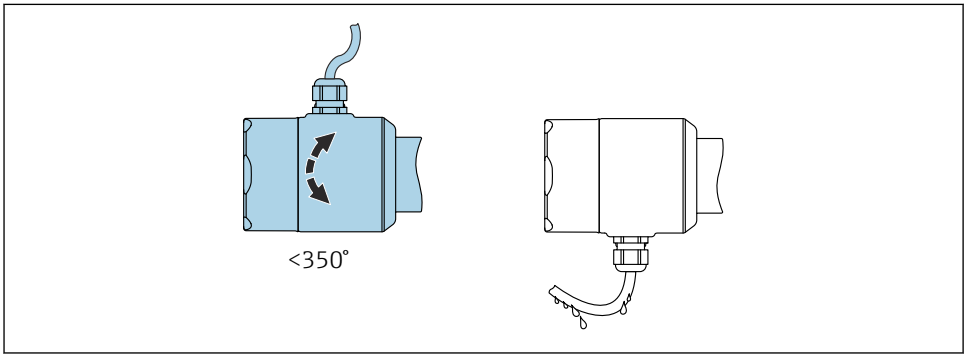

11 Housing without set screw; form a drip loop on the cable.

Housing with locking screw

NOTICE

The locking screw is not sufficiently tightened when the device is delivered.

The housing may rotate and become loose due to vibration.

▶ Tighten the locking screw to 3.5 Nm (2.58 lbf ft).

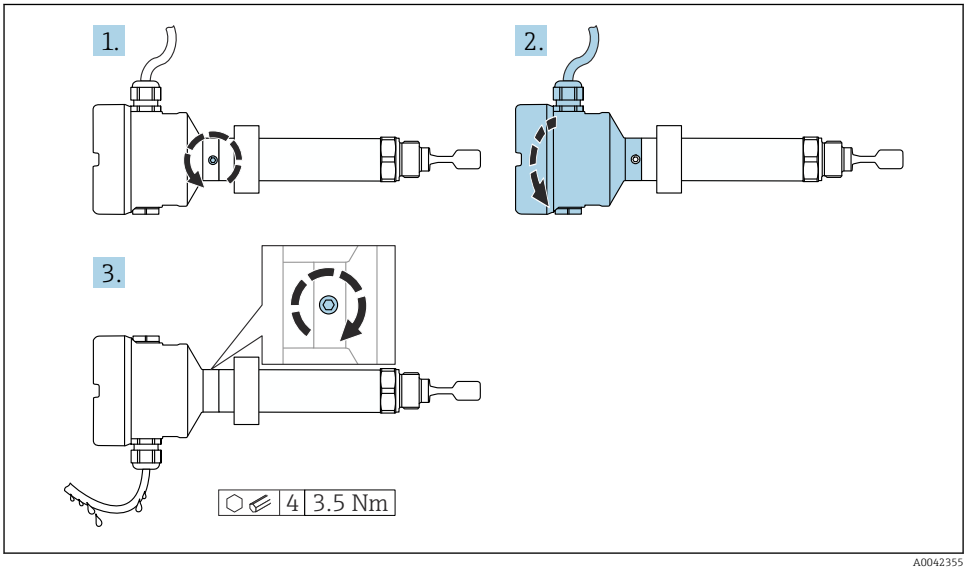

12 Housing with external locking screw; form a drip loop on the cable

1. Loosen the external locking screw (maximum 1.5 turns).
2. Turn the housing and align the cable entry.
3. Tighten the external locking screw.

Rotating the housing

The housing can be rotated up to 380° by loosening the locking screw.

NOTICE

The housing cannot be completely unscrewed.

- Loosen the external locking screw by a maximum of 1.5 turns. If the screw is turned further or completely removed (beyond the screw lifting point), small parts (counter disk) may become loose and fall out.
- Tighten the locking screw (hex socket 4 mm (0.16 in)) to 3.5 Nm (2.58 lbf ft) ±0.3 Nm (±0.22 lbf ft).

Closing the housing covers

NOTICE

Thread and housing cover damaged from dirt and fouling!

- Remove dirt (e.g. sand) on the thread of the covers and housing.
- If you continue to encounter resistance when closing the cover, check the thread again for fouling.

Housing thread

The threads of the electronics and connection compartment can be coated with an anti-friction coating.
The following applies for all housing materials:
Do not lubricate the housing threads.

6 Electrical connection

6.1 Required tool

- Screwdriver for electrical connection
- Allen key for screw of cover lock

6.2 Connecting requirements

6.2.1 Cover with securing screw

The cover is locked by a securing screw in devices for use in hazardous areas with certain explosion protection.

NOTICE

If the securing screw is not positioned correctly, the cover cannot provide secure sealing.

- ▶ Open the cover: slacken the screw of the cover lock with a maximum of 2 turns so that the screw does not fall out. Fit the cover and check the cover seal.
- ▶ Close the cover: screw the cover securely onto the housing, making sure that the securing screw is positioned correctly. There should not be any gap between the cover and housing.

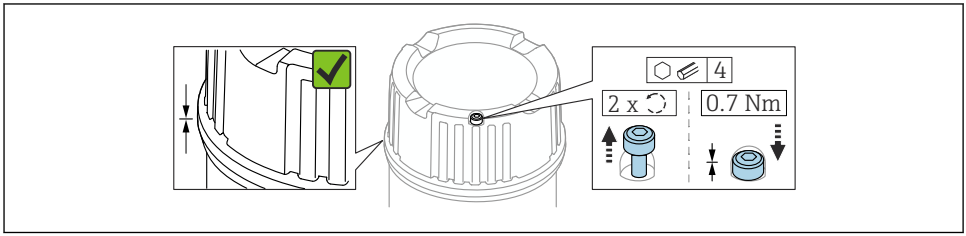

13 Cover with securing screw

6.2.2 Connecting protective earth (PE)

The protective earth conductor at the device must only be connected if the device's operating voltage is ≥ 35 V_{DC} or ≥ 16 V_{AC}eff.

When the device is used in hazardous areas, it must always be included in the potential equalization of the system, irrespective of the operating voltage.

The plastic housing is available with or without an external protective earth connection (PE). If the operating voltage of the electronic insert is < 35 V, the plastic housing has no external protective earth connection.

6.3 Connecting the device

Housing thread
The threads of the electronics and connection compartment can be coated with an anti-friction coating.
The following applies for all housing materials:
Do not lubricate the housing threads.

6.3.1 2-wire AC (electronic insert FEL61)

- Two-wire alternating current version
- Switches the load directly in the power supply circuit via an electronic switch; always connect in series with a load.
- Functional testing without level change
  A functional test can be performed on the device using the test button on the electronic insert.

Supply voltage

U = AC 19 to 253 V, 50 Hz/60 Hz

Residual voltage when switched through: typically 12 V

In accordance with IEC 61010-1: Provide a suitable circuit breaker for the device and limit the current to 1 A, e.g. by installing a 1 A fuse (slow-blow) in the phase (not the neutral conductor) of the supply circuit.

Power consumption

S ≤ 2 VA

Current consumption

Residual current when blocked: I ≤ 3.8 mA

The red LED flashes in the event of an overload or short-circuit. Check for an overload or short-circuit every 5 s. The test is deactivated after 60 s.

Load

- Load with a minimum holding power/rated power of 2.5 VA at 253 V (10 mA) or 0.5 VA at 24 V (20 mA)
- Load with a maximum holding power/rated power of 89 VA at 253 V (350 mA) or 8.4 VA at 24 V (350 mA)
- With overload and short-circuit protection

Behavior of output signal

- OK status: Load on (switched through)
- Demand mode: Load off (blocked)
- Alarm: Load off (blocked)

Terminals

Terminals for cable cross-section up to 2.5 mm^2 (14 AWG). Use ferrules for the wires.

Overvoltage protection

Overvoltage category II

Terminal assignment

Always connect an external load. The electronic insert has integrated short-circuit protection.

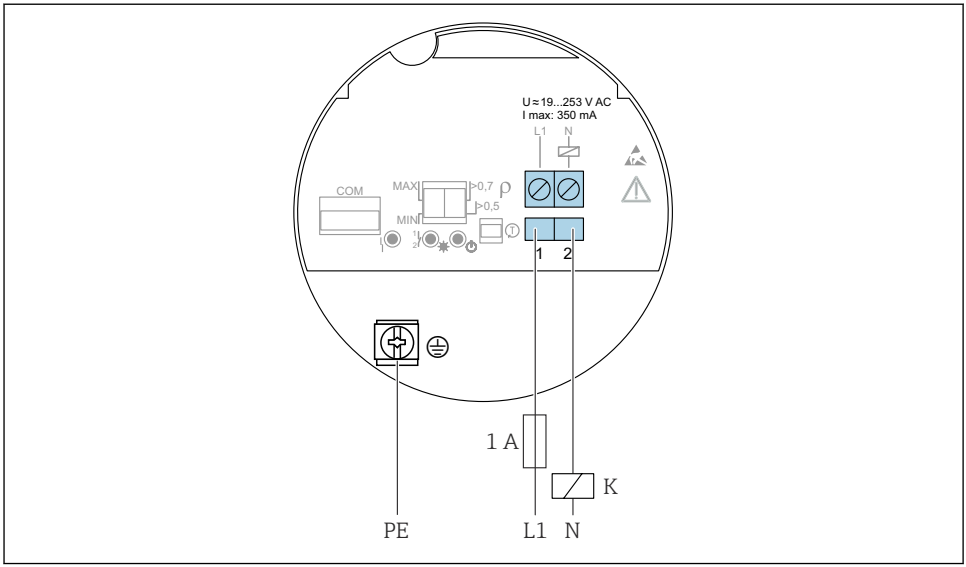

A0036060

14 2-wire AC, electronic insert FEL61

Behavior of switch output and signaling

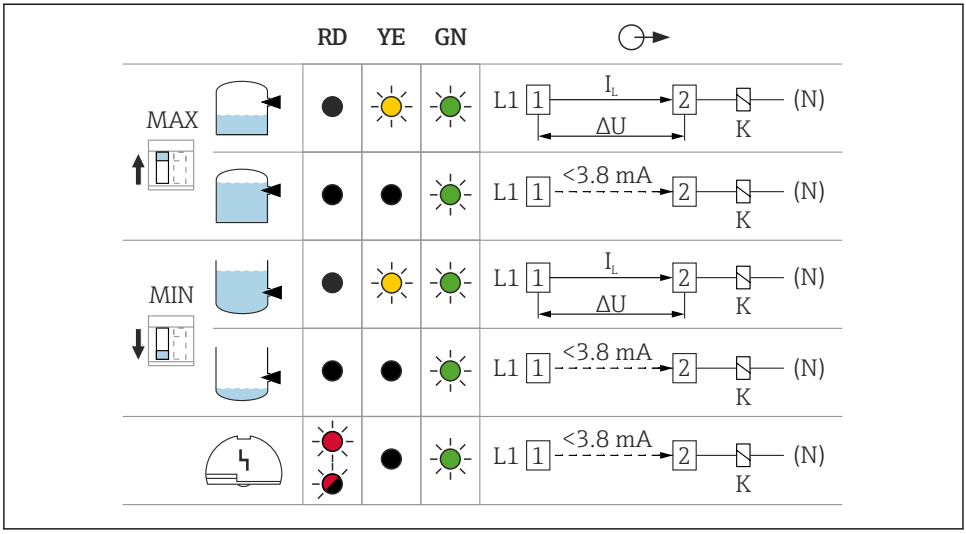

15 *Behavior of switch output and signaling, electronic insert FEL61*

MAX DIP switch for setting MAX safety mode
MIN DIP switch for setting MIN safety mode
RD LED red for warning or alarm
YE LED yellow, switch status
GN LED green, operational status, device on
I_L Load current switched through

Selection tool for relays

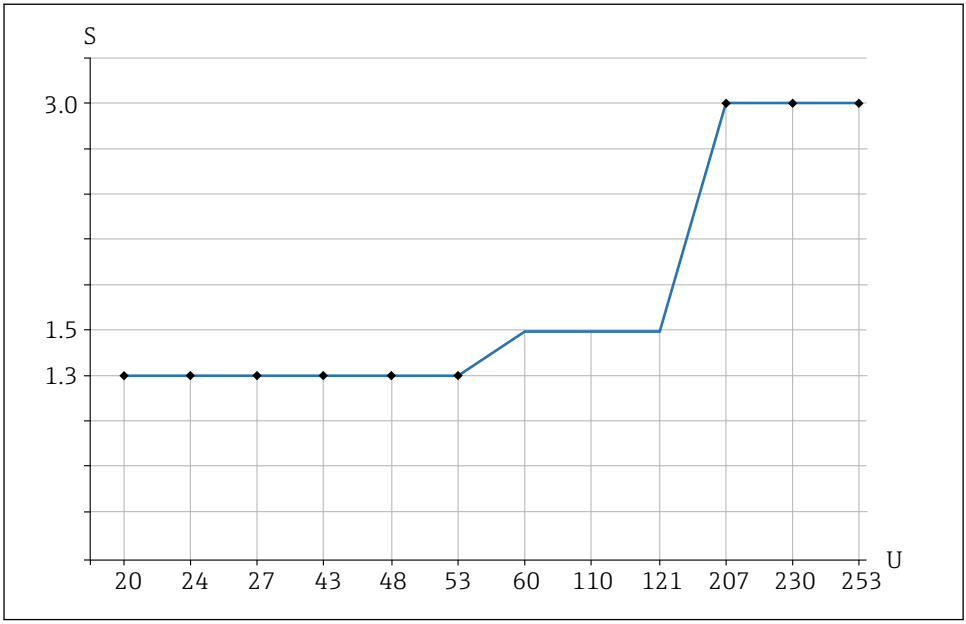

A0042052

16 Recommended minimum holding power/rated power for load

S Holding power/rated power in [VA]
U Operating voltage in [V]

AC mode

- Operating voltage: 24 V, 50 Hz/60 Hz
- Holding power/rated power: > 0.5 VA, < 8.4 VA

- Operating voltage: 110 V, 50 Hz/60 Hz
- Holding power/rated power: > 1.1 VA, < 38.5 VA

- Operating voltage: 230 V, 50 Hz/60 Hz
- Holding power/rated power: > 2.3 VA, < 80.5 VA

6.3.2 3-wire DC PNP (electronic insert FEL62)

- Three-wire direct current version
- Preferably in conjunction with programmable logic controllers (PLC), DI modules as per EN 61131-2. Positive signal at switching output of electronics module (PNP)
- Functional testing without level change
  A functional test can be performed on the device using the test button on the electronic insert or using the test magnet (can be ordered as an option) with the housing closed.

Supply voltage

WARNING

Failure to use the prescribed power supply unit.
Risk of potentially life-threatening electric shock!
- The FEL62 may only be powered by devices with reliable galvanic isolation in accordance with IEC 61010-1.

U = 10 to 55 V_{DC}

The device must be powered by a voltage supply categorized as "CLASS 2" or "SELV".

Comply with the following according to IEC 61010-1: Provide a suitable circuit breaker for the device and limit the current to 500 mA, e.g. by installing a 0.5 A fuse (slow-blow) in the power supply circuit.

Power consumption

P ≤ 0.5 W

Current consumption

I ≤ 10 mA (without load)

The red LED flashes in the event of an overload or short-circuit. Check for an overload or short-circuit every 5 s.

Load current

I ≤ 350 mA with overload and short-circuit protection

Capacitance load

C ≤ 0.5 µF at 55 V, C ≤ 1.0 µF at 24 V

Residual current

I < 100 µA (for blocked transistor)

Residual voltage

U < 3 V (for switched through transistor)

Behavior of output signal

- OK status: Switched through
- Demand mode: Blocked
- Alarm: Blocked

Terminals

Terminals for cable cross-section up to 2.5 mm^2 (14 AWG). Use ferrules for the wires.

Overvoltage protection

Overvoltage category I

Terminal assignment

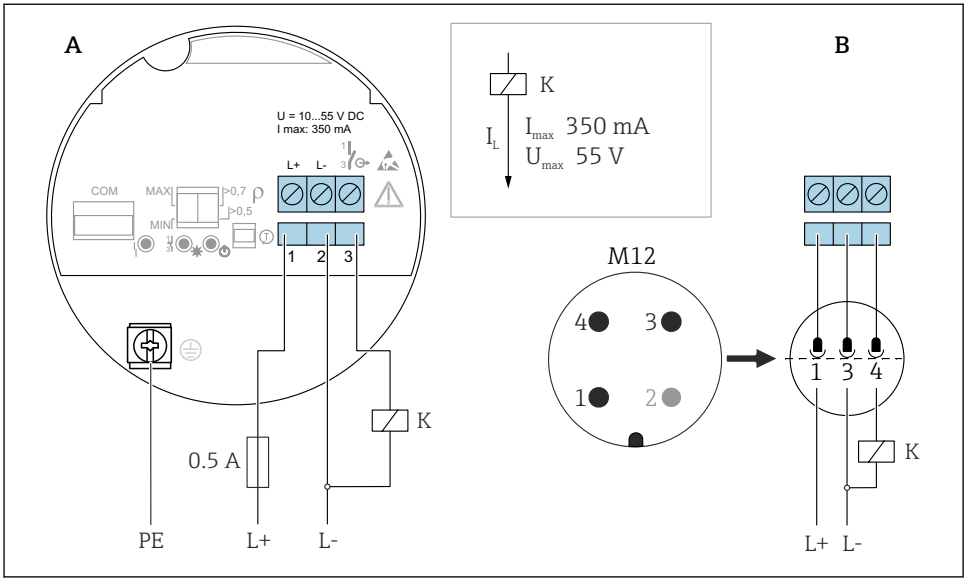

17 3-wire DC-PNP, electronic insert FEL62

A Connection wiring with terminals
B Connection wiring with M12 plug in housing according to EN61131-2 standard

Behavior of switch output and signaling

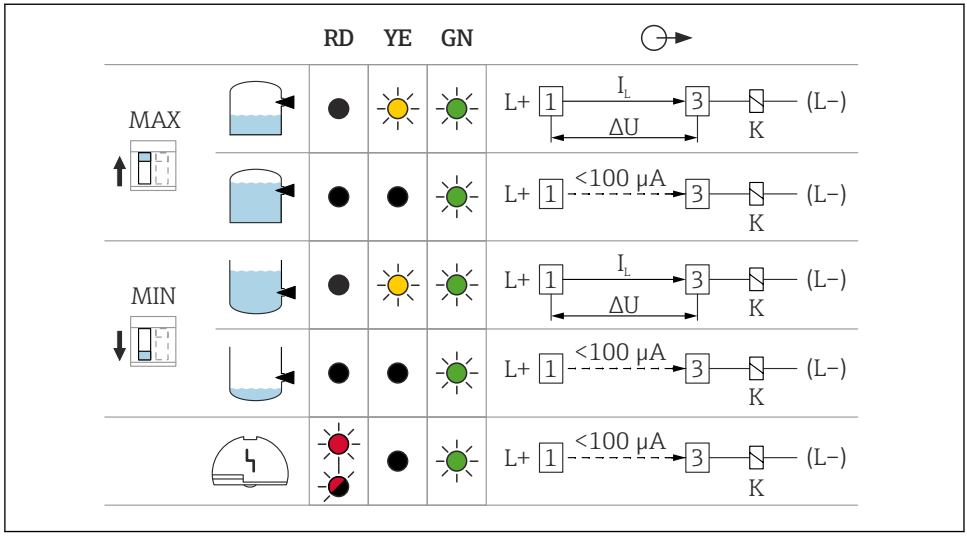

18 *Behavior of switch output and signaling, electronic insert FEL62*

MAX DIP switch for setting MAX safety mode
MIN DIP switch for setting MIN safety mode
RD LED red for warning or alarm
YE LED yellow, switch status
GN LED green, operational status, device on
I_L Load current switched through

6.3.3 Universal current connection with relay output (electronic insert FEL64)

- Switches the loads via two potential-free change-over contacts
- Two galvanically isolated change-over contacts (DPDT), both change-over contacts switch simultaneously
- Functional testing without level change. A functional test can be performed on the device using the test button on the electronic insert or using the test magnet (can be ordered as an option) with the housing closed.

WARNING

An error at the electronic insert can cause the permitted temperature for touch-safe surfaces to be exceeded. This presents a risk of burns.

▶ Do not touch the electronics in the event of an error!

Supply voltage

U = 19 to 253 V_{AC}, 50 Hz/60 Hz / 19 to 55 V_{DC}

Comply with the following according to IEC 61010-1: Provide a suitable circuit breaker for the device and limit the current to 500 mA, e.g. by installing a 0.5 A fuse (slow-blow) in the power supply circuit.

Power consumption

S < 25 VA, P < 1.3 W

Connectable load

Loads switched via two potential-free change-over contacts (DPDT)

- I_{AC} ≤ 6 A, U~ ≤ AC 253 V; P~ ≤ 1 500 VA, cos φ = 1, P~ ≤ 750 VA, cos φ > 0.7
- I_{DC} ≤ 6 A to DC 30 V, I DC ≤ 0.2 A to 125 V

Additional restrictions for the connectable load depend on the selected approval. Pay attention to the information in the Safety Instructions (XA).

According to IEC 61010, the following applies: Total voltage from relay outputs and auxiliary power supply ≤ 300 V.

Use electronic insert FEL62 DC PNP for small DC load currents, e.g. for connection to a PLC.

Relay contact material: Silver/nickel AgNi 90/10

When connecting a device with high inductance, provide a spark quenching unit to protect the relay contact. A fine-wire fuse (depending on the connected load) protects the relay contact in the event of a short-circuit.

Both relay contacts switch simultaneously.

Behavior of output signal

- OK status: Relay energized
- Demand mode: Relay de-energized
- Alarm: Relay de-energized

Terminals

Terminals for cable cross-section up to 2.5 mm^2 (14 AWG). Use ferrules for the wires.

Overvoltage protection

Overvoltage category II

Terminal assignment

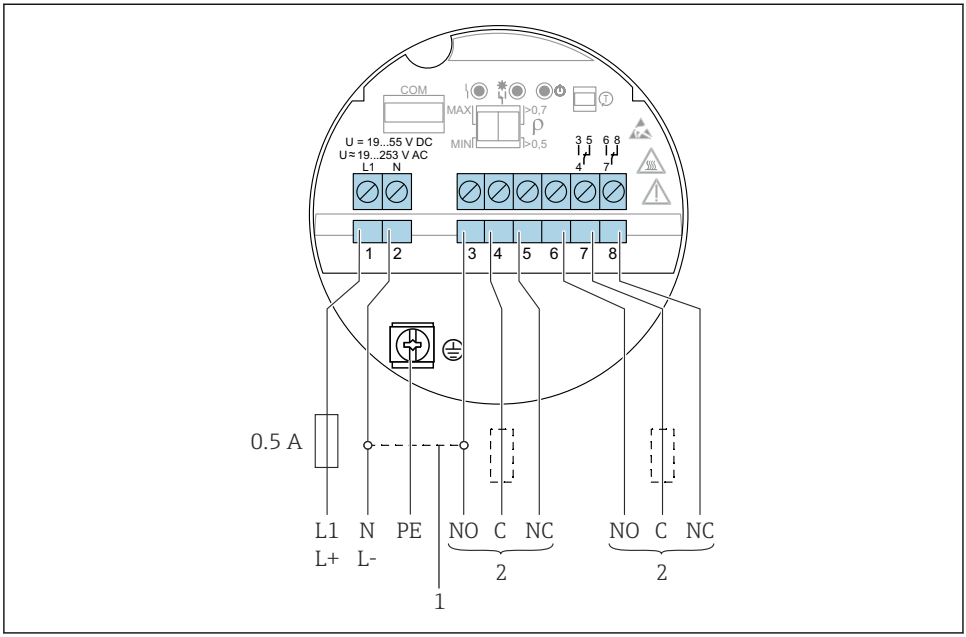

A0036062

19 Universal current connection with relay output, electronic insert FEL64

1 When bridged, the relay output works with NPN logic
2 Connectable load

Behavior of switch output and signaling

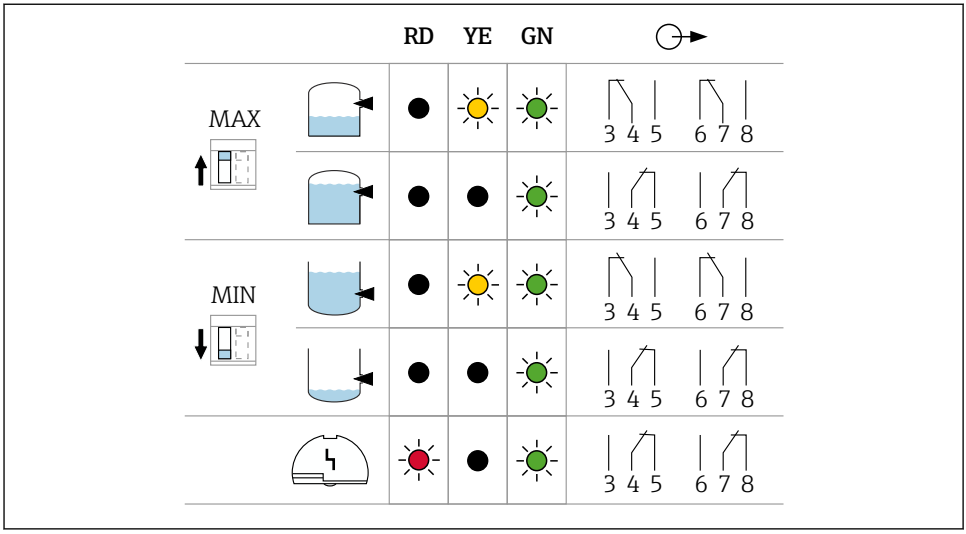

20 Behavior of switch output and signaling, electronic insert FEL64

MAX DIP switch for setting MAX safety mode
MIN DIP switch for setting MIN safety mode
RD LED red for alarm
YE LED yellow, switch status
GN LED green, operational status, device on

6.3.4 Relay output DC connection (electronic insert FEL64 DC)

- Switches the loads via two potential-free change-over contacts
- Two galvanically isolated change-over contacts (DPDT), both change-over contacts switch simultaneously
- Functional testing without level change. A functional test can be performed on the entire device using the test button on the electronic insert or using the test magnet (can be ordered as an option) with the housing closed.

Supply voltage

U = DC 9 to 20 V

The device must be powered by a voltage supply categorized as "CLASS 2" or "SELV".

Comply with the following according to IEC 61010-1: Provide a suitable circuit breaker for the device and limit the current to 500 mA, e.g. by installing a 0.5 A fuse (slow-blow) in the power supply circuit.

Power consumption

P < 1.0 W

Connectable load

Loads switched via two potential-free change-over contacts (DPDT)

- I_{AC} ≤ 6 A, U~ ≤ AC 253 V; P~ ≤ 1 500 VA, cos φ = 1, P~ ≤ 750 VA, cos φ > 0.7
- I_{DC} ≤ 6 A to DC 30 V, I DC ≤ 0.2 A to 125 V

Additional restrictions for the connectable load depend on the selected approval. Pay attention to the information in the Safety Instructions (XA).

According to IEC 61010, the following applies: Total voltage from relay outputs and auxiliary power supply ≤ 300 V

Electronic insert FEL62 DC PNP preferred for small DC load currents, e.g. connection to a PLC.

Relay contact material: Silver/nickel AgNi 90/10

When connecting a device with high inductance, fit a spark quenching unit to protect the relay contact. A fine-wire fuse (depending on the connected load) protects the relay contact in the event of a short-circuit.

Behavior of output signal

- OK status: Relay energized
- Demand mode: Relay de-energized
- Alarm: Relay de-energized

Terminals

Terminals for cable cross-section up to 2.5 mm^2 (14 AWG). Use ferrules for the wires.

Overvoltage protection

Overvoltage category I

Terminal assignment

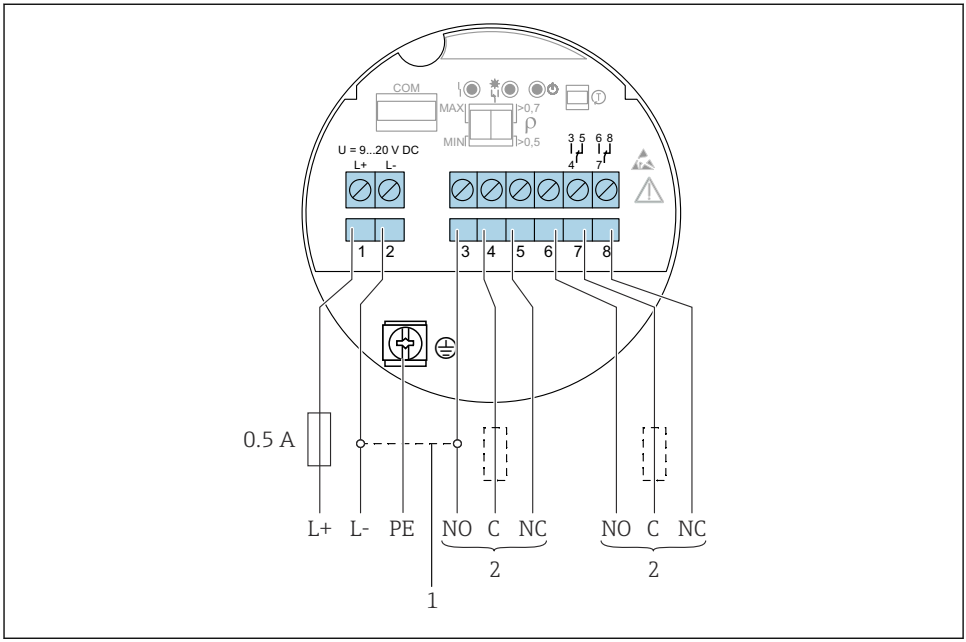

A0037685

21 DC connection with relay output, electronic insert FEL64 DC

1 When bridged, the relay output works with NPN logic
2 Connectable load

Behavior of switch output and signaling

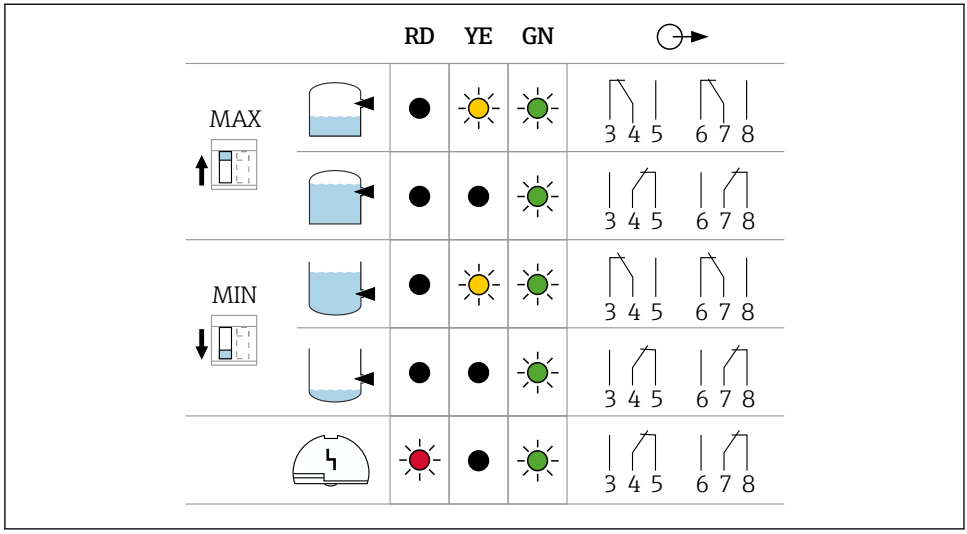

22 *Behavior of switch output and signaling, electronic insert FEL64 DC*

MAX DIP switch for setting MAX safety mode
MIN DIP switch for setting MIN safety mode
RD LED red for alarm
YE LED yellow, switch status
GN LED green, operational status, device on

6.3.5 PFM output (electronic insert FEL67)

- For connection to Endress+Hauser Nivotester switching units FTL325P and FTL375P
- PFM signal transmission; pulse frequency modulation, superimposed on the power supply along the two-wire cabling
- Functional testing without level change:
  - A functional test can be performed on the device using the test button on the electronic insert.
  - The functional test can also be prompted by disconnecting the supply voltage or triggered directly by the Nivotester FTL325P and FTL375P switching unit.

Supply voltage

U = DC 9.5 to 12.5 V_{DC}

The device must be powered by a voltage supply categorized as "CLASS 2" or "SELV".

Comply with the following according to IEC 61010-1: Provide a suitable circuit breaker for the device.

Power consumption

P ≤ 150 mW with Nivotester FTL325P or FTL375P

Behavior of output signal

- OK status: MAX mode of operation 150 Hz, MIN mode of operation 50 Hz
- Demand mode: MAX mode of operation 50 Hz, MIN mode of operation 150 Hz
- Alarm: MAX/MIN mode of operation 0 Hz

Terminals

Terminals for cable cross-section up to 2.5 mm^2 (14 AWG). Use ferrules for the wires.

Overvoltage protection

Overvoltage category I

Terminal assignment

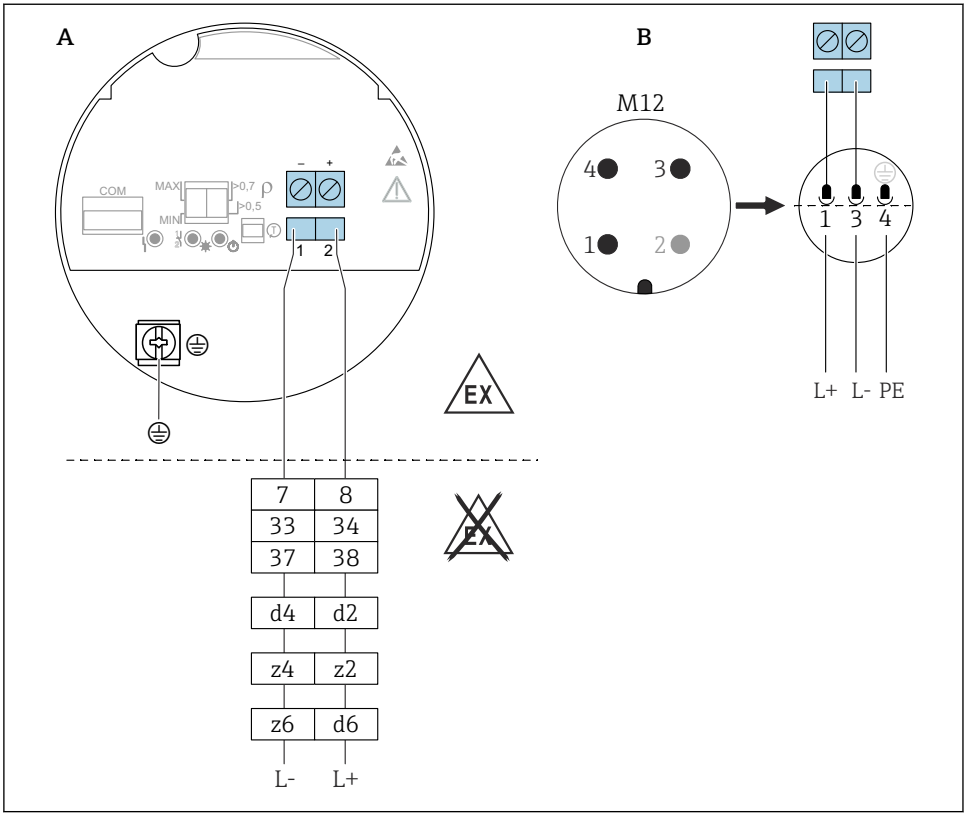

A0036065

23 PFM output, electronic insert FEL67

A Connection wiring with terminals
B Connection wiring with M12 plug in housing according to EN61131-2 standard
7/ 8: Nivotester FTL325P 1 CH, FTL325P 3 CH input 1
33/ 34: Nivotester FTL325P 3 CH input 2
37/ 38: Nivotester FTL325P 3 CH input 3
d4/ d2: Nivotester FTL375P input 1
z4/ z2: Nivotester FTL375P input 2
z6/ d6: Nivotester FTL375P input 3

Connection cable

- Maximum cable resistance: 25 Ω per core
- Maximum cable capacitance: < 100 nF
- Maximum cable length: 1 000 m (3 281 ft)

Behavior of switch output and signaling

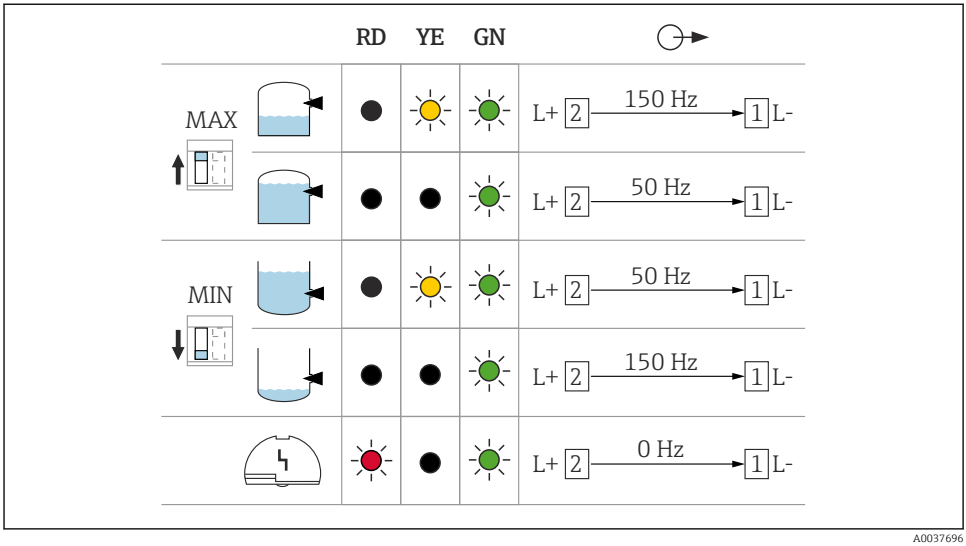

24 *Switching behavior and signaling, electronic insert FEL67*

MAX DIP switch for setting MAX safety mode
MIN DIP switch for setting MIN safety mode
RD LED red for alarm
YE LED yellow, switch status
GN LED green, operational status, device on

The switches for MAX/MIN on the electronic insert and the FTL325P switching unit must be set according to the application. Only then is it possible to perform the functional test correctly.

6.3.6 2-wire NAMUR > 2.2 mA/< 1.0 mA (electronic insert FEL68)

- To connect to isolating amplifiers according to NAMUR (IEC 60947-5-6), e.g. Nivotester FTL325N from Endress+Hauser
- To connect to isolating amplifiers of third-party suppliers according to NAMUR (IEC 60947-5-6), a permanent power supply for electronic insert FEL68 must be ensured.
- Signal transmission H-L edge 2.2 to 3.8 mA/0.4 to 1.0 mA according to NAMUR (IEC 60947-5-6) on two-wire cabling
- Functional testing without level change. A functional test can be performed on the device using the test button on the electronic insert or using the test magnet (can be ordered as an option) with the housing closed.
  The functional test can also be triggered by interrupting the supply voltage or activated directly from the Nivotester FTL325N.

Supply voltage

U = DC 8.2 V ±10 %

The device must be powered by a voltage supply categorized as "CLASS 2" or "SELV".

Comply with the following according to IEC 61010-1: Provide a suitable circuit breaker for the device.

Power consumption

NAMUR IEC 60947-5-6

< 6 mW with I < 1 mA; < 38 mW with I = 3.5 mA

Connection data interface

NAMUR IEC 60947-5-6

Behavior of output signal

- OK status: Output current 2.2 to 3.8 mA
- Demand mode: Output current 0.4 to 1.0 mA
- Alarm: Output current < 1.0 mA

Terminals

Terminals for cable cross-section up to 2.5 mm^2 (14 AWG). Use ferrules for the wires.

Overvoltage protection

Overvoltage category I

Terminal assignment

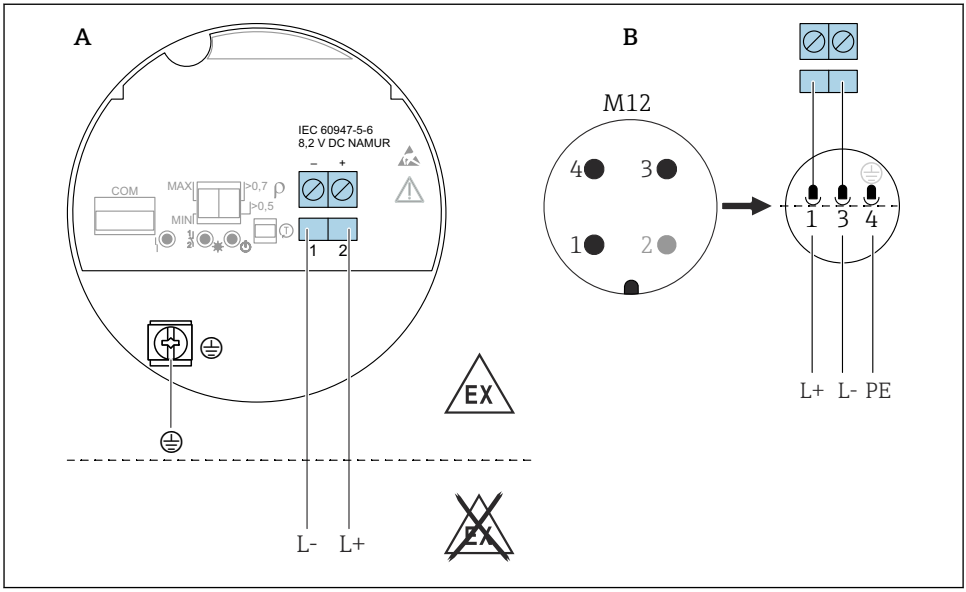

A0036066

25 2-wire NAMUR ≥ 2.2 mA/≤ 1.0 mA, electronic insert FEL68

A Connection wiring with terminals
B Connection wiring with M12 plug in housing according to EN61131-2 standard

Behavior of switching output and signaling

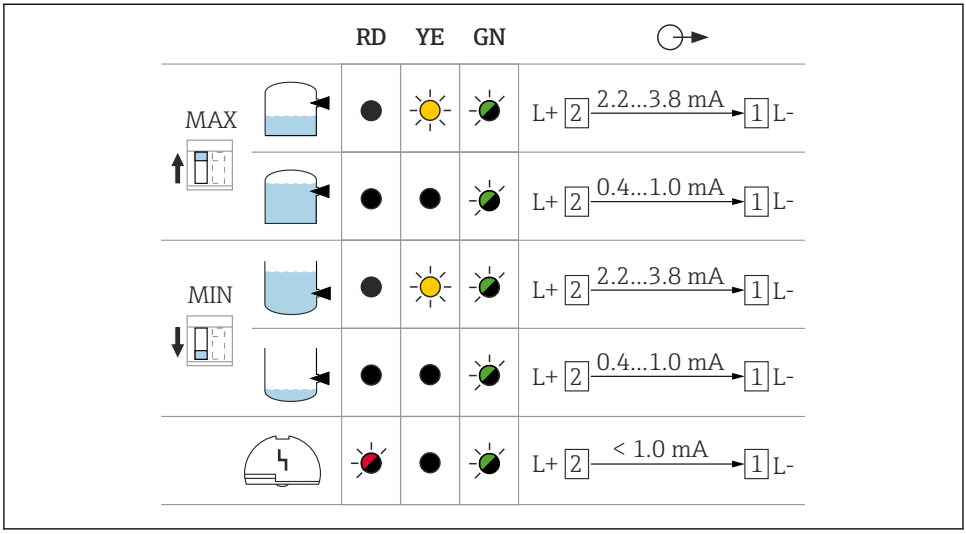

26 Behavior of switching output and signaling, electronic insert FEL68

MAX DIP switch, for setting MAX safety mode
MIN DIP switch, for setting MIN safety mode
RD Red LED, for alarm
YE Yellow LED, for switch status
GN Green LED, for operational status, device on

The yellow LED is disabled if the Bluetooth® module is connected.

The Bluetooth® module for use in conjunction with electronic insert FEL68 (2-wire NAMUR) must be ordered separately with the required battery.

6.3.7 LED module VU120 (optional)

A brightly lit LED indicates the operational status (switch status or alarm status) in green, yellow or red. The LED module can be connected to the following electronic inserts: FEL62, FEL64, FEL64DC.

6.3.8 Bluetooth® module VU121 (optional)

The Bluetooth® module can be connected via the COM interface to the following electronic inserts: FEL61, FEL62, FEL64, FEL64 DC, FEL67, FEL68 (2-wire NAMUR). In conjunction with electronic insert FEL68 (2-wire NAMUR), the Bluetooth® module must be ordered separately with the required battery.

6.3.9 Connecting the cables

Required tools

- Flat-blade screwdriver (0.6 mm x 3.5 mm) for terminals
- Suitable tool with width across flats AF24/25 (8 Nm (5.9 lbf ft)) for M20 cable gland

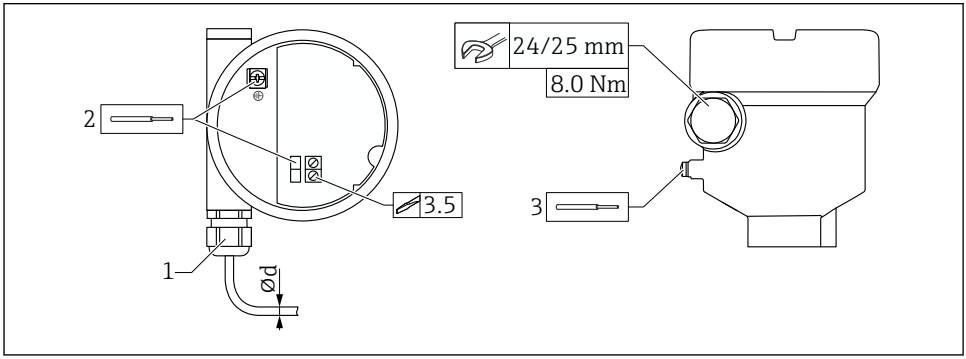

A0018023

27 Example of coupling with cable entry, electronic insert with terminals

1 M20 coupling (with cable entry), example
2 Conductor cross-section maximum 2.5 mm² (AWG14), ground terminal on inside in housing + terminals on the electronics
3 Conductor cross-section maximum 4.0 mm² (AWG12), ground terminal on outside of the housing (example: plastic housing with outer protective ground connection (PE))
Ød Nickel-plated brass 7 to 10.5 mm (0.28 to 0.41 in),
Plastic 5 to 10 mm (0.2 to 0.38 in),
Stainless steel 7 to 12 mm (0.28 to 0.47 in)

Pay attention to the following when using the M20 coupling

Following cable entry:

- Counter-tighten the coupling
- Tighten the union nut of the coupling with 8 Nm (5.9 lbf ft)
- Screw the enclosed coupling into the housing with 3.75 Nm (2.76 lbf ft)

7 Operation options

7.1 Overview of operation options

7.1.1 Operation concept

- Operation with button and DIP switches on the electronic insert
- Display with optional Bluetooth® module and SmartBlue app via Bluetooth® wireless technology, see the Operating Instructions.
- Indication of the operational status (switch status or alarm status) with optional LED module (signal lights visible from the outside), see the Operating Instructions.

7.2 Elements on the electronic insert

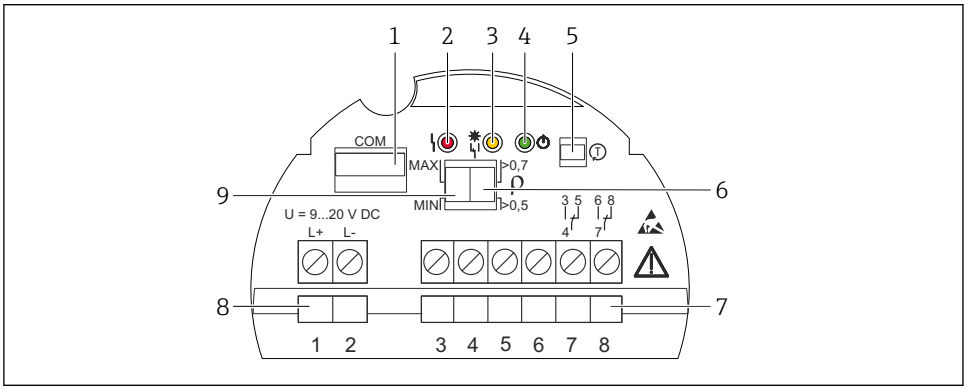

A0037705

28 *Example of electronic insert FEL64DC*

1 *COM interface for additional modules (LED module, Bluetooth® module)*
2 *Red LED, for warning or alarm*
3 *Yellow LED, for switch status*
4 *Green LED, for operational status (device on)*
5 *Test button, for activating function test*
6 *DIP switch, for setting density 0.7 or 0.5*
7 *Terminals (3 to 8), for relay contact*
8 *Terminals (1 to 2), for power supply*
9 *DIP switch, for configuring MAX/MIN safety mode*

7.3 Heartbeat diagnostics and verification with Bluetooth® wireless technology

7.3.1 Access via Bluetooth® wireless technology

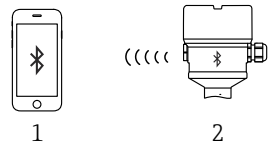

A0033411

29 Remote operation via Bluetooth® wireless technology

1 Smartphone or tablet with SmartBlue app
2 Device with optional Bluetooth® module

8 Commissioning

8.1 Functional test using button on electronic insert

- The functional test must be performed in the OK status: MAX safety and sensor free or MIN safety and sensor covered.
- The LEDs flash one after another as a chaser light during the functional test.
- When performing the proof test in safety instrumented systems according to SIL or WHG: Comply with the instructions in the Safety Manual.

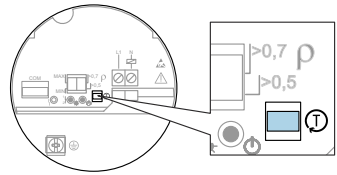

A0037132

30 Position of button for the functional test for electronic inserts FEL61/62/64/64DC/67/68

1. Make sure that no unintended switching operations are triggered!
2. Press the "T" button on the electronic insert for at least 1 s (e.g. with a screwdriver).
   ↳ The device functional test is performed. The output changes from the OK status to demand mode.
   Duration of the functional test: At least 10 s or if the button is pressed for > 10 s, the test lasts until the test button is released.

The device returns to normal measurement operation if the internal test is successful.

If the housing may not be opened during operation due to explosion protection requirements, e.g. Ex d /XP, the functional test can also be started from the outside with the test magnet (optionally available), (FEL62, FEL64, FEL64DC, FEL68).

The functional test of the PFM electronics (FEL67) and NAMUR electronics (FEL68) can be started at the Nivotester FTL325P/N.

8.2 Functional test of the electronic switch using the test magnet

The functional test of the electronic switch can be performed without opening the device:

- Hold the test magnet against the marking on the nameplate on the outside.
  - Simulation is possible in the case of the FEL62, FEL64, FEL64DC, FEL68 electronic inserts.

The functional test with the test magnet acts in the same way as the functional test using the test button on the electronic insert.

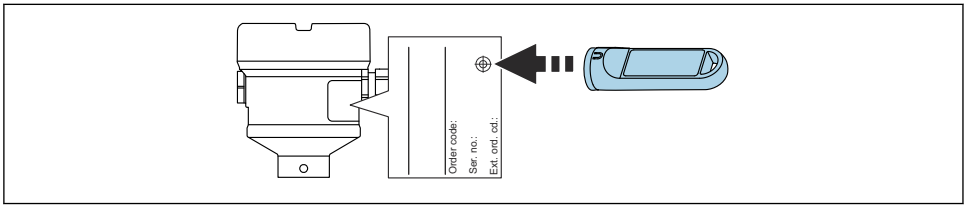

31 Functional test with test magnet

8.3 Switching on the device

During the power-up time, the device output is in the safety-oriented state, or in the alarm state if available:

- For electronic insert FEL61, the output will be in the correct state after a maximum of 4 sfollowing power-up.
- For electronic inserts FEL62, FEL64, FEL64DC, the output will be in the correct state after a maximum of 3 s following power-up.
- For electronic inserts FEL68 NAMUR and FEL67 PFM, a functional test is always performed upon power-up. The output will be in the correct state after a maximum of 10 s.

71783248

www.addresses.endress.com

Endress+Hauser

People for Process Automation