BA01058D/06/EN/05.25-00
71726238
2025-12-01

Valid as of version
01.03.zz (Device firmware)

Operating Instructions
Proline Promass I 100

Coriolis flowmeter
Modbus RS485

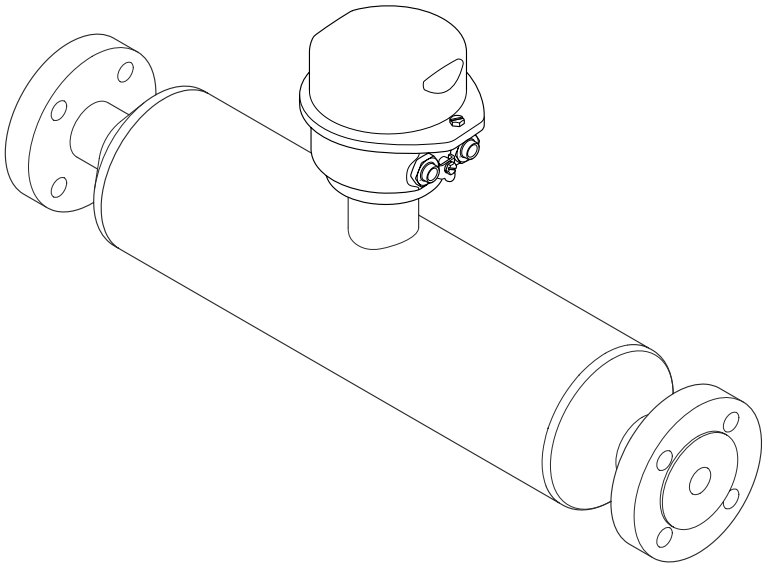

Endress+Hauser
People for Process Automation

- Make sure the document is stored in a safe place such that it is always available when working on or with the device.
- To avoid danger to individuals or the facility, read the "Basic safety instructions" section carefully, as well as all other safety instructions in the document that are specific to working procedures.
- The manufacturer reserves the right to modify technical data without prior notice. Your Endress+Hauser sales organization will supply you with current information and updates to this manual.

Table of contents

1 About this document 6
1.1 Document function 6
1.2 Symbols 6
1.2.1 Safety symbols 6
1.2.2 Electrical symbols 6
1.2.3 Tool symbols 6
1.2.4 Symbols for certain types of information 7
1.2.5 Symbols in graphics 7
1.3 Documentation 7
1.4 Registered trademarks 8

2 Safety instructions 9
2.1 Requirements for the personnel 9
2.2 Intended use 9
2.3 Workplace safety 10
2.4 Operational safety 10
2.5 Product safety 10
2.6 IT security 10

3 Product description 11
3.1 Product design 11
3.1.1 Device version with Modbus RS485 communication protocol 11

4 Incoming acceptance and product identification 12
4.1 Incoming acceptance 12
4.2 Product identification 12
4.2.1 Transmitter nameplate 13
4.2.2 Sensor nameplate 14
4.2.3 Promass 100 safety barrier nameplate 15
4.2.4 Symbols on the device 15

5 Storage and transport 16
5.1 Storage conditions 16
5.2 Transporting the product 16
5.2.1 Measuring devices without lifting lugs 16
5.2.2 Measuring devices with lifting lugs . . 17
5.2.3 Transporting with a fork lift 17
5.3 Packaging disposal 17

6 Installation 18
6.1 Installation requirements 18
6.1.1 Installation position 18
6.1.2 Environmental and process requirements 20
6.1.3 Special installation instructions 21
6.2 Installing the device 23
6.2.1 Required tools 23
6.2.2 Preparing the measuring instrument . 23
6.2.3 Installing the measuring instrument . 24
6.3 Post-installation check 24

7 Electrical connection 25
7.1 Electrical safety 25
7.2 Connecting requirements 25
7.2.1 Required tools 25
7.2.2 Requirements for connection cable . . . 25
7.2.3 Terminal assignment 26
7.2.4 Pin assignment, device plug 28
7.2.5 Shielding and grounding 29
7.2.6 Preparing the device 29
7.3 Connecting the device 30
7.3.1 Connecting the transmitter 30
7.3.2 Connecting Safety Barrier Promass 100 32
7.4 Potential equalization 32
7.4.1 Requirements 32
7.5 Special connection instructions 33
7.5.1 Connection examples 33
7.6 Hardware settings 33
7.6.1 Activating the terminating resistor . . 33
7.7 Ensuring the degree of protection 34
7.8 Post-connection check 35

8 Operation options 36
8.1 Overview of operation options 36
8.2 Structure and function of the operating menu 37
8.2.1 Structure of the operating menu 37
8.2.2 Operating philosophy 38
8.3 Displaying the measured values via the local display (optionally available) 39
8.3.1 Operational display 39
8.3.2 User roles and related access authorization 40
8.4 Access to the operating menu via the operating tool 41
8.4.1 Connecting the operating tool 41
8.4.2 FieldCare 41
8.4.3 DeviceCare 42

9 System integration 43
9.1 Overview of device description files 43
9.1.1 Current version data for the device . . . 43
9.1.2 Operating tools 43
9.2 ModbusRS485 information 43
9.2.1 Function codes 43
9.2.2 Register information 44
9.2.3 Response time 44
9.2.4 Data types 44

9.2.5 Byte transmission sequence 45
9.2.6 Modbus data map 46

10 Commissioning 48

10.1 Post-installation and post-connection check . . 48
10.2 Connecting via FieldCare 48
10.3 Setting the operating language 48
10.4 Configuring the device 48
10.4.1 Defining the tag name 48
10.4.2 Setting the system units 49
10.4.3 Selecting and setting the medium . . . 52
10.4.4 Configuring the communication interface 53
10.4.5 Configuring the low flow cut off 55
10.4.6 Partially filled pipe detection 56
10.5 Advanced settings 57
10.5.1 Using the parameter to enter the access code 57
10.5.2 Calculated process variables 57
10.5.3 Carrying out a sensor adjustment 59
10.5.4 Configuring the totalizer 60
10.5.5 Using parameters for device administration 61
10.6 Simulation 61
10.7 Protecting settings from unauthorized access . 62
10.7.1 Write protection via write protection switch 62

11 Operation 64

11.1 Reading the device locking status 64
11.2 Adjusting the operating language 64
11.3 Reading off measured values 64
11.3.1 "Measured variables" submenu 64
11.3.2 "Totalizer" submenu 67
11.4 Adapting the measuring device to the process conditions 68
11.5 Performing a totalizer reset 68
11.5.1 Function scope of "Control Totalizer" parameter 69
11.5.2 Function range of "Reset all totalizers" parameter 69

12 Diagnostics and troubleshooting . . . 70

12.1 General troubleshooting 70
12.2 Diagnostic information via LEDs 70
12.2.1 Transmitter 70
12.2.2 Promass 100 safety barrier 71
12.3 Diagnostic information in FieldCare or DeviceCare 72
12.3.1 Diagnostic options 72
12.3.2 Calling up remedy information 73
12.4 Diagnostic information via communication interface 73
12.4.1 Reading out diagnostic information . . 73
12.4.2 Configuring error response mode 73
12.5 Adapting the diagnostic information 74
12.5.1 Adapting the diagnostic behavior 74
12.6 Overview of diagnostic information 74
12.7 Pending diagnostic events 76
12.8 Diagnostic list 77
12.9 Event logbook 77
12.9.1 Reading out the event logbook 77
12.9.2 Filtering the event logbook 78
12.9.3 Overview of information events 78
12.10 Resetting the device 79
12.10.1 Function scope of the "Device reset" parameter 79
12.11 Device information 79
12.12 Firmware history 81

13 Maintenance 82

13.1 Maintenance work 82
13.1.1 Cleaning 82
13.2 Measuring and test equipment 82
13.3 Maintenance services 82

14 Repair 83

14.1 General notes 83
14.1.1 Repair and conversion concept 83
14.1.2 Notes for repair and conversion 83
14.2 Spare parts 83
14.3 Repair services 83
14.4 Return 83
14.5 Disposal 84
14.5.1 Removing the measuring instrument 84
14.5.2 Disposing of the measuring instrument 84

15 Accessories 85

15.1 Device-specific accessories 85
15.1.1 For the sensor 85
15.2 Communication-specific accessories 85
15.3 Service-specific accessories 86
15.4 System components 87

16 Technical data 88

16.1 Application 88
16.2 Function and system design 88
16.3 Input 89
16.4 Output 91
16.5 Power supply 92
16.6 Performance characteristics 94
16.7 Installation 98
16.8 Environment 98
16.9 Process 99
16.10 Mechanical construction 102
16.11 Operability 105
16.12 Certificates and approvals 105
16.13 Application packages 108
16.14 Accessories 109
16.15 Documentation 109

Index **111**

1 About this document

1.1 Document function

These Operating Instructions contain all the information required in the various life cycle phases of the device: from product identification, incoming acceptance and storage, to installation, connection, operation and commissioning, through to troubleshooting, maintenance and disposal.

1.2 Symbols

1.2.1 Safety symbols

⚠ DANGER
This symbol alerts you to a dangerous situation. Failure to avoid this situation will result in serious or fatal injury.

⚠ WARNING
This symbol alerts you to a potentially dangerous situation. Failure to avoid this situation can result in serious or fatal injury.

⚠ CAUTION
This symbol alerts you to a potentially dangerous situation. Failure to avoid this situation can result in minor or medium injury.

NOTICE
This symbol alerts you to a potentially harmful situation. Failure to avoid this situation can result in damage to the product or something in its vicinity.

1.2.2 Electrical symbols

Symbol	Meaning
⎓	Direct current
∼	Alternating current
≂	Direct current and alternating current
⏚	**Ground connection** A grounded terminal which, as far as the operator is concerned, is grounded via a grounding system.
⏚	**Protective earth (PE)** Ground terminals that must be connected to ground prior to establishing any other connections. The ground terminals are located on the interior and exterior of the device: ▪ Interior ground terminal: protective earth is connected to the mains supply. ▪ Exterior ground terminal: device is connected to the plant grounding system.

1.2.3 Tool symbols

Symbol	Meaning
⬡	Allen key
	Open-end wrench

1.2.4 Symbols for certain types of information

Symbol	Meaning
✓	**Permitted** Procedures, processes or actions that are permitted.
✓✓	**Preferred** Procedures, processes or actions that are preferred.
✗	**Forbidden** Procedures, processes or actions that are forbidden.
ℹ	**Tip** Indicates additional information.
	Reference to documentation
	Reference to page
	Reference to graphic
▶	Notice or individual step to be observed
1., 2., 3....	Series of steps
↳	Result of a step
?	Help in the event of a problem
	Visual inspection

1.2.5 Symbols in graphics

Symbol	Meaning
1, 2, 3, ...	Item numbers
1., 2., 3., ...	Series of steps
A, B, C, ...	Views
A-A, B-B, C-C, ...	Sections
EX	Hazardous area
~~EX~~	Safe area (non-hazardous area)
≋➡	Flow direction

1.3 Documentation

ℹ For an overview of the scope of the associated Technical Documentation, refer to the following:

- *Device Viewer* (www.endress.com/deviceviewer): Enter the serial number from the nameplate
- *Endress+Hauser Operations app*: Enter serial number from nameplate or scan matrix code on nameplate.

The following document types are available in the Downloads area of the Endress+Hauser website (www.endress.com/downloads), depending on the device version:

Document type	Purpose and content of the document
Technical Information (TI)	**Planning aid for your device** The document contains all the technical data on the device and provides an overview of the accessories and other products that can be ordered for the device.
Brief Operating Instructions (KA)	**Guide that takes you quickly to the 1st measured value** The Brief Operating Instructions contain all the essential information from incoming acceptance to initial commissioning.
Operating Instructions (BA)	**Your reference document** The Operating Instructions contain all the information that is required in various phases of the life cycle of the device: from product identification, incoming acceptance and storage, to mounting, connection, operation and commissioning through to troubleshooting, maintenance and disposal.
Description of Device Parameters (GP)	**Reference for your parameters** The document provides a detailed explanation of each individual parameter. The description is aimed at those who work with the device over the entire life cycle and perform specific configurations.
Safety instructions (XA)	Depending on the approval, safety instructions for electrical equipment in hazardous areas are also supplied with the device. These are an integral part of the Operating Instructions. The nameplate indicates which Safety Instructions (XA) apply to the device.
Supplementary device-dependent documentation (SD/FY)	Always comply strictly with the instructions in the relevant supplementary documentation. The supplementary documentation is a constituent part of the device documentation.

1.4 Registered trademarks

Modbus®
Registered trademark of SCHNEIDER AUTOMATION, INC.

TRI-CLAMP®
Registered trademark of Ladish & Co., Inc., Kenosha, USA

2 Safety instructions

2.1 Requirements for the personnel

The personnel for installation, commissioning, diagnostics and maintenance must fulfill the following requirements:
- Trained, qualified specialists must have a relevant qualification for this specific function and task.
- Are authorized by the plant owner/operator.
- Are familiar with federal/national regulations.
- Before starting work, read and understand the instructions in the manual and supplementary documentation as well as the certificates (depending on the application).
- Follow instructions and comply with basic conditions.

The operating personnel must fulfill the following requirements:
- Are instructed and authorized according to the requirements of the task by the facility's owner-operator.
- Follow the instructions in this manual.

2.2 Intended use

Application and media
The measuring instrument described in this manual is intended only for the flow measurement of liquids and gases.

Depending on the version ordered, the measuring instrument can also measure potentially explosive, flammable, poisonous and oxidizing media.

Measuring instruments for use in hazardous areas, in hygienic applications, or where there is an increased risk due to pressure, are specially labeled on the nameplate.

To ensure that the measuring instrument remains in proper condition during the operating time:
- Only use the measuring instrument in full compliance with the data on the nameplate and the general conditions listed in the manual and supplementary documentation.
- Using the nameplate, check whether the ordered device is permitted for the intended use in the hazardous area (e.g. explosion protection, pressure vessel safety).
- Use the measuring instrument only for media against which the materials in contact with the process are sufficiently resistant.
- Keep within the specified pressure and temperature range.
- Keep within the specified ambient temperature range.
- Protect the measuring instrument permanently against corrosion from environmental influences.

Incorrect use
Non-designated use can compromise safety. The manufacturer is not liable for damage caused by improper or non-designated use.

⚠ WARNING
Danger of breakage due to corrosive or abrasive fluids and ambient conditions!
- Verify the compatibility of the process fluid with the sensor material.
- Ensure the resistance of all wetted materials during the process.
- Keep within the specified pressure and temperature range.

NOTICE

Verification for borderline cases:

- For special fluids and fluids for cleaning, Endress+Hauser is glad to provide assistance in verifying the corrosion resistance of fluid-wetted materials, but does not accept any warranty or liability as minute changes in the temperature, concentration or level of contamination in the process can alter the corrosion resistance properties.

Residual risks

WARNING

Risk of hot or cold burns! The use of media and electronics with high or low temperatures can produce hot or cold surfaces on the device.

- Mount suitable touch protection.

2.3 Workplace safety

For work on and with the device:

- Wear the required personal protective equipment according to federal/national regulations.

2.4 Operational safety

Damage to the device!

- Operate the device in proper technical condition and fail-safe condition only.
- The operator is responsible for the interference-free operation of the device.

Modifications to the device

Unauthorized modifications to the device are not permitted and can lead to unforeseeable dangers!

- If modifications are nevertheless required, consult with the manufacturer.

Repair

To ensure continued operational safety and reliability:

- Carry out repairs on the device only if they are expressly permitted.
- Observe federal/national regulations pertaining to the repair of an electrical device.
- Use only original spare parts and accessories.

2.5 Product safety

This state-of-the-art device is designed and tested in accordance with good engineering practice to meet operational safety standards. It left the factory in a condition in which it is safe to operate.

It meets general safety standards and legal requirements. It also complies with the EU directives listed in the device-specific EU declaration of conformity. The manufacturer confirms this by affixing the CE mark.

2.6 IT security

The manufacturer warranty is valid only if the product is installed and used as described in the Operating Instructions. The product is equipped with security mechanisms to protect it against any inadvertent changes to the settings.

IT security measures, which provide additional protection for the product and associated data transfer, must be implemented by the operators themselves in line with their security standards.

3 Product description

The device consists of a transmitter and a sensor. The Safety Barrier Promass 100 is part of the scope of supply and must be implemented to operate the device.

The device is available as a compact version:
The transmitter and sensor form a mechanical unit.

3.1 Product design

3.1.1 Device version with Modbus RS485 communication protocol

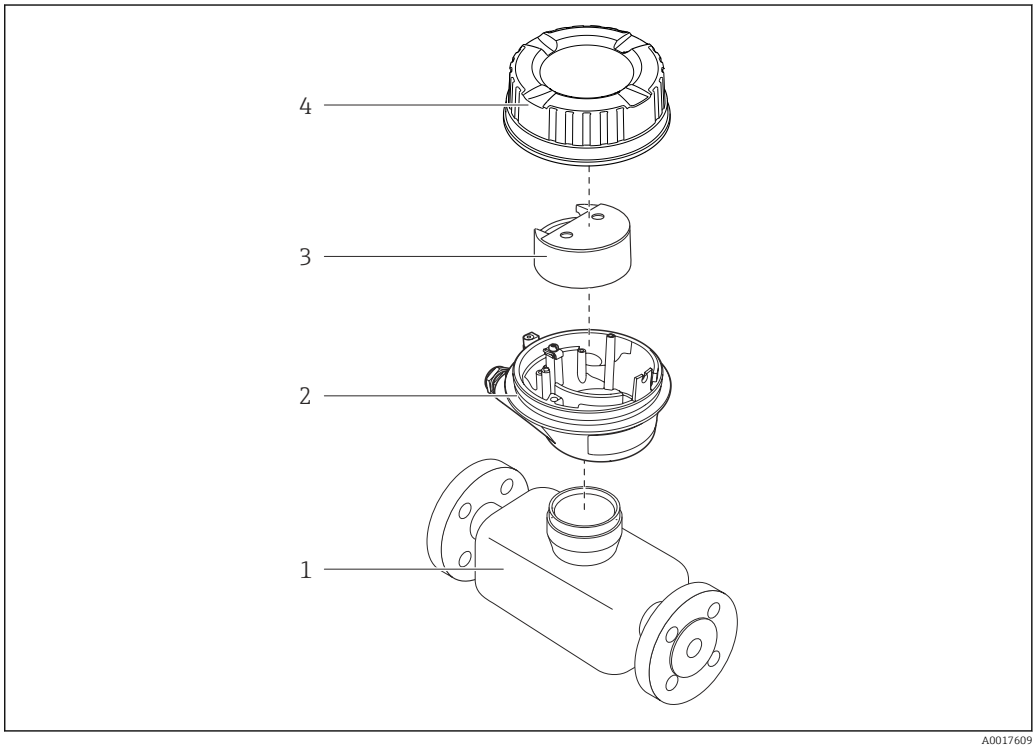

1 Important components of a measuring device

1 Sensor
2 Transmitter housing
3 Main electronics module
4 Transmitter housing cover

In the case of the device version with Modbus RS485 intrinsically safe, the Safety Barrier Promass 100 forms part of the scope of supply.

4 Incoming acceptance and product identification

4.1 Incoming acceptance

On receipt of the delivery:

1. Check the packaging for damage.
   ↳ Report all damage immediately to the manufacturer.
   Do not install damaged components.
2. Check the scope of delivery using the delivery note.
3. Compare the data on the nameplate with the order specifications on the delivery note.
4. Check the technical documentation and all other necessary documents, e.g. certificates, to ensure they are complete.

If one of the conditions is not satisfied, contact the manufacturer.

4.2 Product identification

The device can be identified in the following ways:
- Nameplate
- Order code with details of the device features on the delivery note
- Enter the serial numbers from the nameplates in the *Device Viewer* (www.endress.com/deviceviewer): all the information about the device is displayed.
- Enter the serial numbers from the nameplates into the *Endress+Hauser Operations app* or scan the DataMatrix code on the nameplate with the *Endress+Hauser Operations app*: all the information about the device is displayed.

For an overview of the scope of the associated Technical Documentation, refer to the following:
- The "Additional standard device documentation" and "Supplementary device-dependent documentation" sections
- The *Device Viewer*: Enter the serial number from the nameplate (www.endress.com/deviceviewer)
- The *Endress+Hauser Operations app*: Enter the serial number from the nameplate or scan the DataMatrix code on the nameplate.

4.2.1 Transmitter nameplate

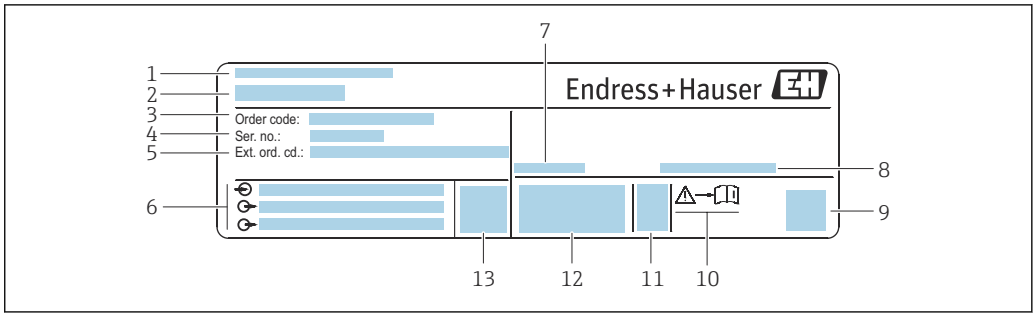

2 Example of a transmitter nameplate

1 *Manufacturer address/certificate holder*
2 *Name of the transmitter*
3 *Order code*
4 *Serial number*
5 *Extended order code*
6 *Electrical connection data, e.g. available inputs and outputs, supply voltage*
7 *Permitted ambient temperature (T_a)*
8 *Degree of protection*
9 *2-D matrix code*
10 *Document number of safety-related supplementary documentation → 110*
11 *Date of manufacture: year-month*
12 *CE mark, RCM-Tick mark*
13 *Firmware version (FW)*

4.2.2 Sensor nameplate

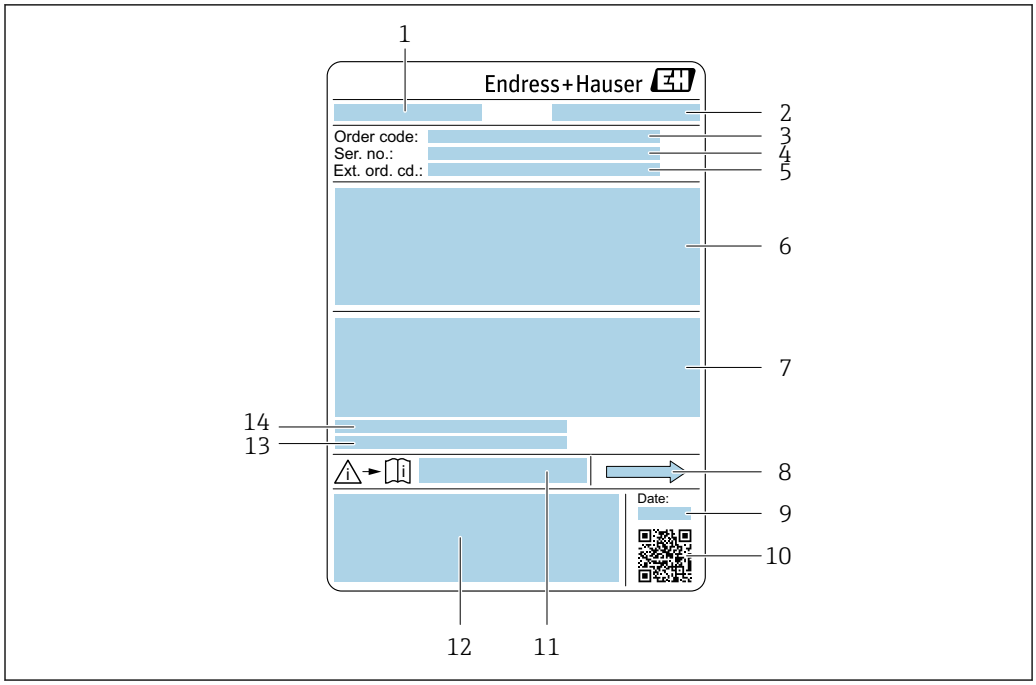

3 *Example of a sensor nameplate*

1 *Name of sensor*
2 *Manufacturer/certificate holder*
3 *Order code*
4 *Serial number (Ser. no.)*
5 *Extended order code (Ext. ord. cd.)*
6 *Nominal diameter of the sensor; flange nominal diameter/nominal pressure; sensor test pressure; medium temperature range; material of measuring tube and manifold; sensor-specific information: e.g. pressure range of sensor housing, wide-range density specification (special density calibration)*
7 *Approval information for explosion protection, Pressure Equipment Directive and degree of protection*
8 *Flow direction*
9 *Manufacturing date: year-month*
10 *2-D matrix code*
11 *Document number of safety-related supplementary documentation*
12 *CE mark, RCM symbol*
13 *Surface roughness*
14 *Permitted ambient temperature (T_a)*

Order code
The measuring device is reordered using the order code.

Extended order code
- The device type (product root) and basic specifications (mandatory features) are always listed.
- Of the optional specifications (optional features), only the safety and approval-related specifications are listed (e.g. LA). If other optional specifications are also ordered, these are indicated collectively using the # placeholder symbol (e.g. #LA#).
- If the ordered optional specifications do not include any safety and approval-related specifications, they are indicated by the + placeholder symbol (e.g. XXXXXX-ABCDE +).

4.2.3 Promass 100 safety barrier nameplate

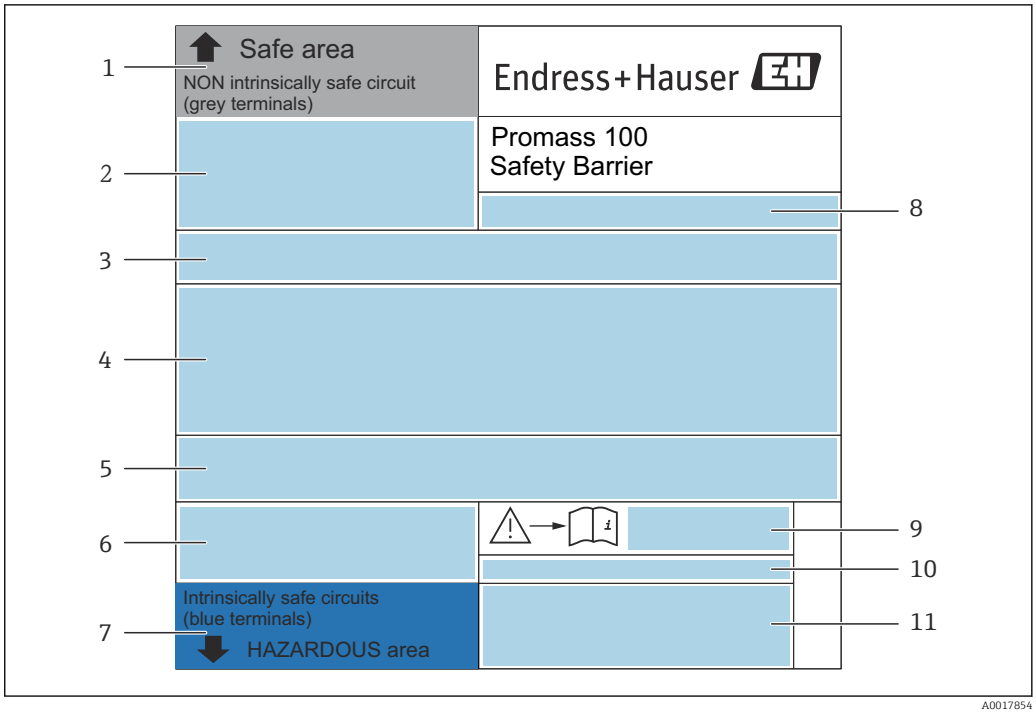

4 *Example of a Promass 100 safety barrier nameplate*

1 *Non-hazardous area or Zone 2/Div. 2*
2 *Serial number, material number and 2-D matrix code of the Promass 100 safety barrier*
3 *Electrical connection data, e.g. available inputs and outputs, supply voltage*
4 *Approval information for explosion protection*
5 *Safety warning*
6 *Communication-specific information*
7 *Intrinsically safe area*
8 *Place of manufacture*
9 *Document number of safety-related supplementary documentation*
10 *Permitted ambient temperature (T_a)*
11 *CE mark, C-Tick*

4.2.4 Symbols on the device

Symbol	Meaning
⚠	**WARNING!** This symbol alerts you to a dangerous situation. Failure to avoid this situation can result in serious or fatal injury. Please consult the documentation for the measuring instrument to discover the type of potential danger and measures to avoid it.
📖	**Reference to documentation** Refers to the corresponding device documentation.
⏚	**Protective ground connection** A terminal that must be connected to the ground prior to establishing any other connections.

5 Storage and transport

5.1 Storage conditions

Observe the following notes for storage:
- ▶ Store in the original packaging to ensure protection from shock.
- ▶ Do not remove protective covers or protective caps installed on process connections. They prevent mechanical damage to the sealing surfaces and contamination in the measuring tube.
- ▶ Protect from direct sunlight. Avoid unacceptably high surface temperatures.
- ▶ Store in a dry and dust-free place.
- ▶ Do not store outdoors.

Storage temperature → 98

5.2 Transporting the product

Transport the measuring device to the measuring point in the original packaging.

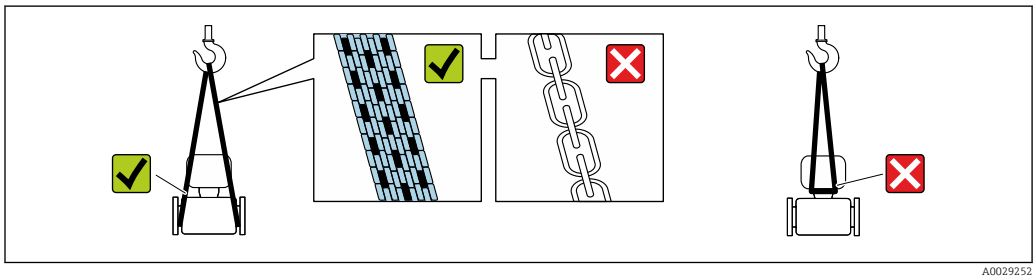

A0029252

Do not remove protective covers or caps installed on process connections. They prevent mechanical damage to the sealing surfaces and contamination in the measuring tube.

5.2.1 Measuring devices without lifting lugs

WARNING

Center of gravity of the measuring device is higher than the suspension points of the webbing slings.

Risk of injury if the measuring device slips.
- ▶ Secure the measuring device against slipping or turning.
- ▶ Observe the weight specified on the packaging (stick-on label).

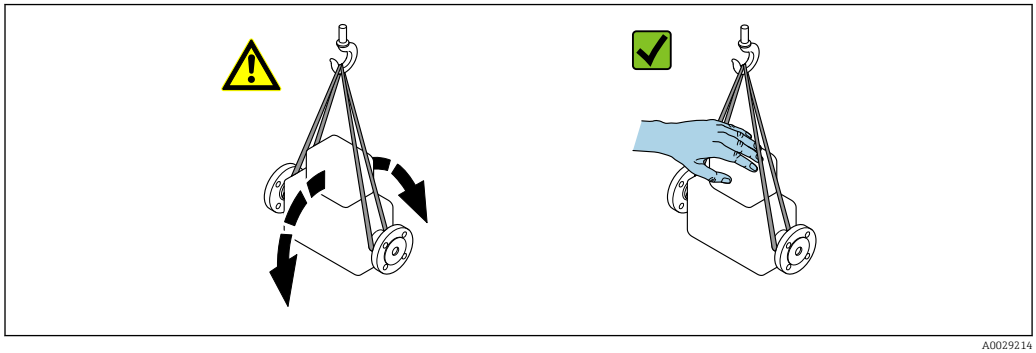

A0029214

5.2.2 Measuring devices with lifting lugs

⚠ CAUTION

Special transportation instructions for devices with lifting lugs

- ▶ Only use the lifting lugs fitted on the device or flanges to transport the device.
- ▶ The device must always be secured at two lifting lugs at least.

5.2.3 Transporting with a fork lift

If transporting in wood crates, the floor structure enables the crates to be lifted lengthwise or at both sides using a forklift.

5.3 Packaging disposal

All packaging materials are environmentally friendly and 100% recyclable:

- Outer packaging of device
  Stretch wrap made of polymer in accordance with EU Directive 2002/95/EC (RoHS)
- Packaging
  - Wood crate treated in accordance with ISPM 15 standard, confirmed by IPPC logo
  - Cardboard box in accordance with European packaging guideline 94/62/EC, recyclability confirmed by Resy symbol
- Transport material and fastening fixtures
  - Disposable plastic pallet
  - Plastic straps
  - Plastic adhesive strips
- Filler material
  Paper pads

6 Installation

6.1 Installation requirements

6.1.1 Installation position

Mounting location

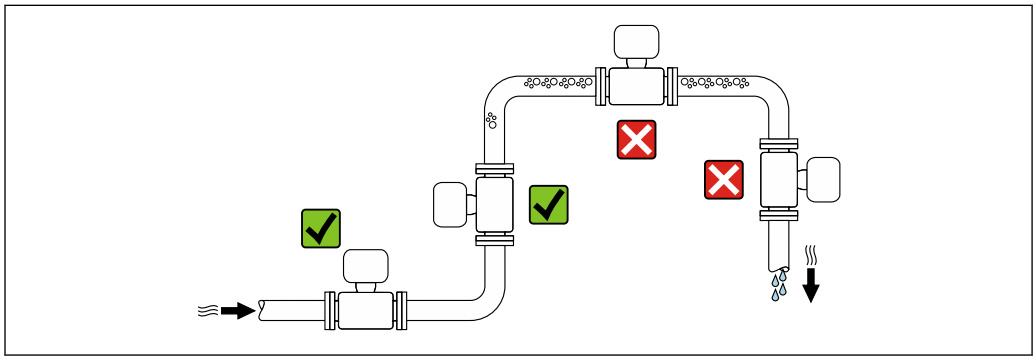

A0028772

To avoid measurement errors caused by gas bubble formation in the measuring tube, avoid the following installation locations in the pipe:
- Highest point of a pipeline
- Directly upstream of a free pipe outlet in a down pipe

Installation in down pipes

However, the following installation suggestion allows for installation in an open vertical pipeline. Pipe restrictions or the use of an orifice with a smaller cross-section than the nominal diameter prevent the sensor running empty while measurement is in progress.

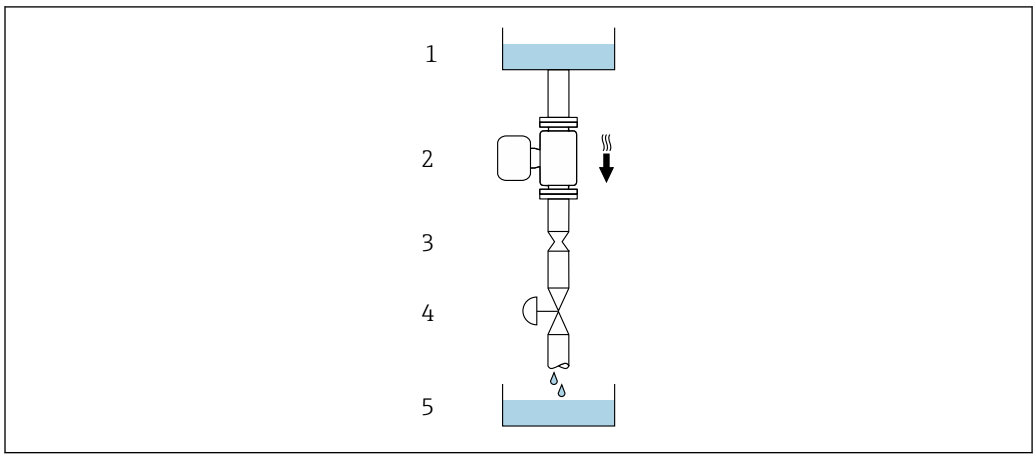

A0028773

5 Installation in a down pipe (e.g. for batching applications)

1 Supply tank
2 Sensor
3 Orifice plate, pipe restriction
4 Valve
5 Filling container

DN/NPS		Ø orifice plate, pipe restriction	
[mm]	[in]	[mm]	[in]
8	⅜	6	0.24
15	½	10	0.40
15 FB	½ FB	15	0.60
25	1	14	0.55
25 FB	1 FB	24	0.95
40	1 ½	22	0.87
40 FB	1½ FB	35	1.38
50	2	28	1.10
50 FB	2 FB	54	2.13
80	3	50	1.97
FB = Full bore			

Orientation

The direction of the arrow on the sensor nameplate helps you to install the sensor according to the flow direction (direction of medium flow through the piping).

Orientation			Recommendation
A	Vertical orientation	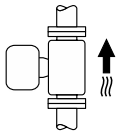 A0015591	✓✓ ✓✓ 1)
B	Horizontal orientation, transmitter at top	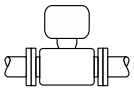 A0015589	✓✓ 2)
C	Horizontal orientation, transmitter at bottom	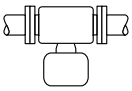 A0015590	✓✓ 3)
D	Horizontal orientation, transmitter at side	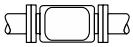 A0015592	✓✓

1) This orientation is recommended to ensure self-draining.
2) Applications with low process temperatures may reduce the ambient temperature. To maintain the minimum ambient temperature for the transmitter, this orientation is recommended.
3) Applications with high process temperatures may increase the ambient temperature. To maintain the maximum ambient temperature for the transmitter, this orientation is recommended.

Inlet and outlet runs

No special precautions need to be taken for fittings that create turbulence, such as valves, elbows or T-pieces, as long as no cavitation occurs → 📄 20.

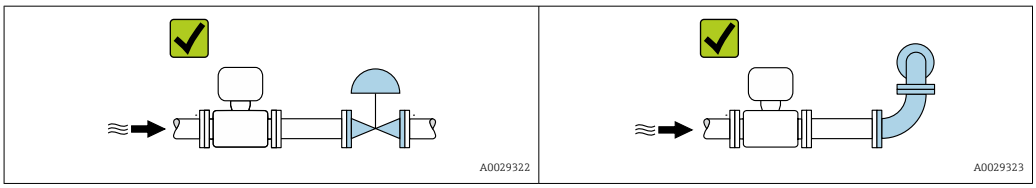

Installation dimensions

For the dimensions and installed lengths of the device, see the "Technical Information" document, "Mechanical construction" section

6.1.2 Environmental and process requirements

Ambient temperature range

Measuring instrument	▪ −40 to +60 °C (−40 to +140 °F) ▪ Order code for "Test, certificate", option JM: −50 to +60 °C (−58 to +140 °F)
Safety Barrier Promass 100	−40 to +60 °C (−40 to +140 °F)

▶ If operating outdoors:
Avoid direct sunlight, particularly in warm climatic regions.

Static pressure

It is important that cavitation does not occur, or that gases entrained in the liquids do not outgas.

Cavitation is caused if the pressure drops below the vapor pressure:
- In liquids that have a low boiling point (e.g. hydrocarbons, solvents, liquefied gases)
- In suction lines

▶ Ensure the static pressure is sufficiently high to prevent cavitation and outgassing.

For this reason, the following mounting locations are recommended:
- At the lowest point in a vertical pipe
- Downstream from pumps (no danger of vacuum)

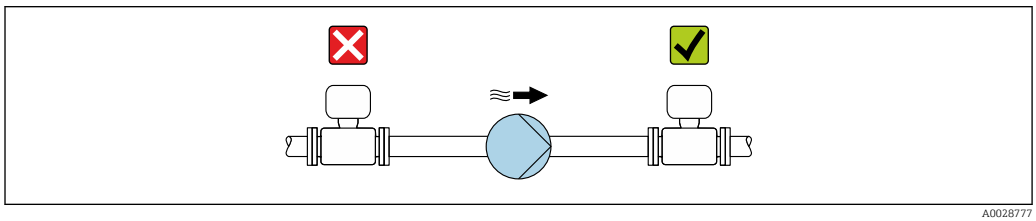

A0028777

Thermal insulation

In the case of some fluids, it is important to keep the heat radiated from the sensor to the transmitter to a low level. A wide range of materials can be used for the required insulation.

The following device versions are recommended for applications with thermal insulation:
Version with extended neck for insulation:
Order code for "Sensor option", option CG with an extended neck length of 105 mm (4.13 in).

NOTICE

Electronics overheating on account of thermal insulation!
- ▶ Recommended orientation: horizontal orientation, transmitter housing pointing downwards.
- ▶ Do not insulate the transmitter housing .
- ▶ Maximum permissible temperature at the lower end of the transmitter housing: 80 °C (176 °F)
- ▶ Thermal insulation with exposed extension neck: We recommend that you do not insulate the extension neck in order to ensure optimum dissipation of heat.

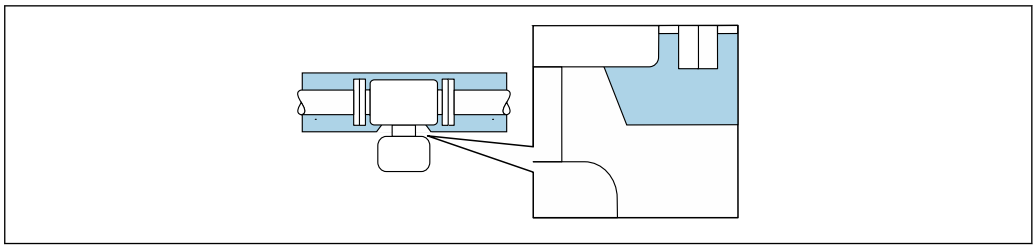

6 *Thermal insulation with exposed extension neck*

Heating

NOTICE

Electronics can overheat due to elevated ambient temperature!

- Observe maximum permitted ambient temperature for the transmitter.
- Depending on the medium temperature, take the device orientation requirements into account.

NOTICE

Danger of overheating when heating

- Ensure that the temperature at the lower end of the transmitter housing does not exceed 80 °C (176 °F).
- Ensure that sufficient convection takes place at the transmitter neck.
- Ensure that a sufficiently large area of the transmitter neck remains exposed. The uncovered part serves as a radiator and protects the electronics from overheating and excessive cooling.
- When using in potentially explosive atmospheres, observe the information in the device-specific Ex documentation. For detailed information on the temperature tables, see the separate document entitled "Safety Instructions" (XA) for the device.
- Consider the behavior of the process diagnostics "830 Ambient temperature too high" and "832 Electronics temperature too high" if overheating cannot be avoided by a suitable system design.

Heating options

If a medium requires that no heat loss should occur at the sensor, users can avail of the following heating options:

- Electrical heating, e.g. with electric band heaters [1)]
- Via pipes carrying hot water or steam
- Via heating jackets

Vibrations

The high oscillation frequency of the measuring tubes ensures that the correct operation of the measuring system is not influenced by plant vibrations.

6.1.3 Special installation instructions

Drainability

When installed vertically, the measuring tube can be drained completely and protected against buildup.

When the sensor is installed in a horizontal line, eccentric clamps can be used to ensure complete drainability. When the system is pitched in a specific direction and at a specific slope, gravity can be used to achieve complete drainability. The sensor must be mounted in

1) The use of parallel electric band heaters is generally recommended (bidirectional electricity flow). Particular considerations must be made if a single-wire heating cable is to be used. Additional information is provided in the document EA01339D "Installation instructions for electrical trace heating systems".

the correct position to ensure full drainability in the horizontal position. Markings on the sensor show the correct mounting position to optimize drainability.

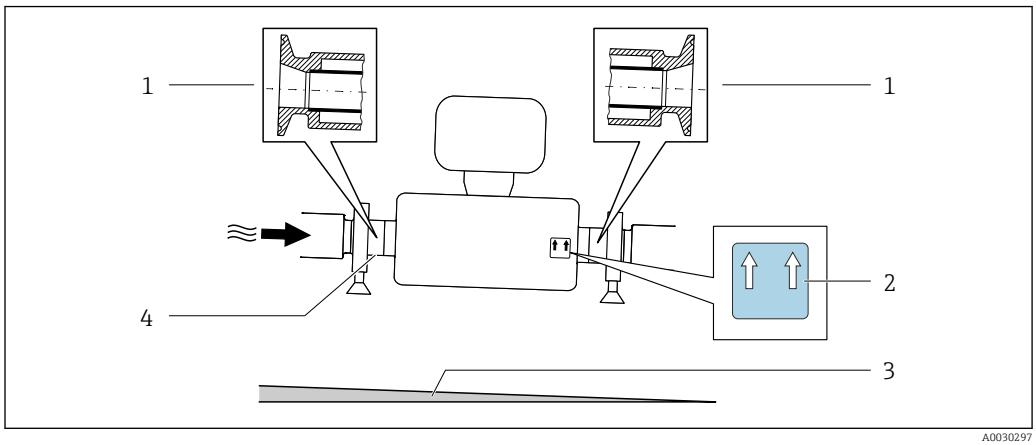

1 *Eccentric clamp connection*
2 *"This side up" label indicates which side is up*
3 *Slope the device in accordance with the hygiene guidelines. Slope: approx. 2 % or 21 mm/m (0.24 in/feet)*
4 *Line on the underside indicates the lowest point of the eccentric process connection.*

Hygienic compatibility

When installing in hygienic applications, please refer to the information in the "Certificates and approvals/hygienic compatibility" section → 📄 106

Securing with mounting clamp in the case of hygiene connections

It is not necessary to provide additional support for the sensor for operational performance purposes. If, however, additional support is required for installation purposes, the following dimensions must be observed.

Use mounting clamp with lining between clamp and measuring instrument.

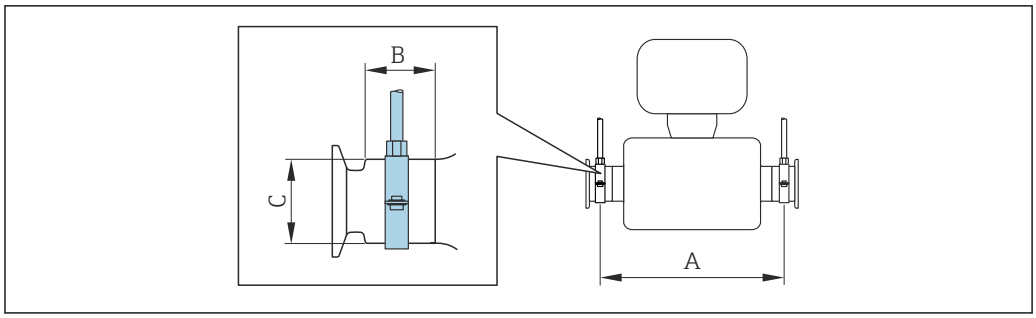

DN		A		B		C	
[mm]	[in]	[mm]	[in]	[mm]	[in]	[mm]	[in]
8	8	373	14.69	20	0.79	40	1.57
15	15	409	16.1	20	0.79	40	1.57
15 FB	15 FB	539	21.22	30	1.18	44.5	1.75
25	25	539	21.22	30	1.18	44.5	1.75
25 FB	25 FB	668	26.3	28	1.1	60	2.36
40	40	668	26.3	28	1.1	60	2.36
40 FB	40 FB	780	30.71	35	1.38	80	3.15
50	50	780	30.71	35	1.38	80	3.15

DN		A		B		C	
[mm]	[in]	[mm]	[in]	[mm]	[in]	[mm]	[in]
50 FB	50 FB	1 152	45.35	57	2.24	90	3.54
80	80	1 152	45.35	57	2.24	90	3.54

Zero point verification and zero adjustment

All measuring instruments are calibrated in accordance with state-of-the-art technology. Calibration takes place under reference conditions → 🗎 94. Therefore, a zero adjustment in the field is generally not required.

Experience shows that zero adjustment is advisable only in special cases:
- To achieve maximum measurement accuracy even with low flow rates.
- Under extreme process or operating conditions (e.g. very high process temperatures or very high-viscosity media).
- For gas applications with low pressure.

To achieve the highest possible measurement accuracy at low flow rates, the installation must protect the sensor from mechanical stress during operation.

To get a representative zero point, ensure that
- any flow in the device is prevented during the adjustment
- the process conditions (e.g. pressure, temperature) are stable and representative

Verification and adjustment cannot be performed if the following process conditions are present:
- Gas pockets
  Ensure that the system has been sufficiently flushed with the medium. Repeat flushing can help to eliminate gas pockets
- Thermal circulation
  In the event of temperature differences (e.g. between the measuring tube inlet and outlet section), induced flow can occur even if the valves are closed due to thermal circulation in the device
- Leaks at the valves
  If the valves are not leak-tight, flow is not sufficiently prevented when determining the zero point

If these conditions cannot be avoided, it is advisable to keep the factory setting for the zero point.

6.2 Installing the device

6.2.1 Required tools

For sensor

For flanges and other process connections: Use a suitable mounting tool.

6.2.2 Preparing the measuring instrument

1. Remove all remaining transport packaging.
2. Remove any protective covers or protective caps present from the sensor.
3. Remove stick-on label on the electronics compartment cover.

6.2.3 Installing the measuring instrument

WARNING

Danger due to improper process sealing!

- Ensure that the inside diameters of the gaskets are greater than or equal to that of the process connections and piping.
- Ensure that the seals and sealing surfaces are clean and undamaged.
- Secure the seals correctly.

1. Ensure that the direction of the arrow on the nameplate of the sensor matches the flow direction of the medium.
2. Install the measuring instrument or turn the transmitter housing so that the cable entries do not point upwards.

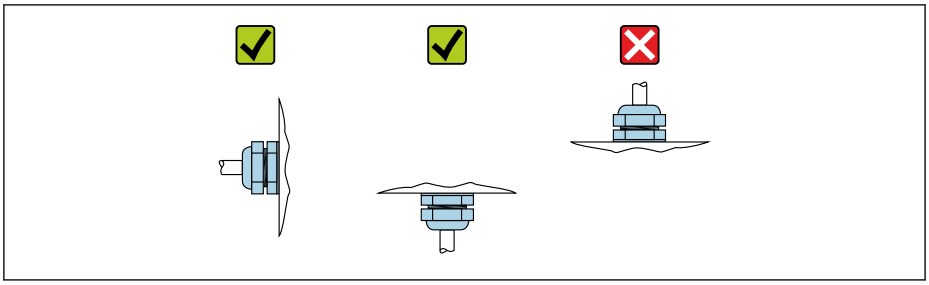

A0029263

6.3 Post-installation check

Is the device undamaged (visual inspection)?	❑
Does the measuring instrument correspond to the measuring point specifications? For example: ▪ Process temperature → 🗎 99 ▪ Pressure (refer to the "Pressure-temperature ratings" section of the "Technical Information" document). ▪ Ambient temperature → 🗎 98 ▪ Measuring range	❑
Has the correct orientation for the sensor been selected → 🗎 19? ▪ According to sensor type ▪ According to medium temperature ▪ According to medium properties (outgassing, with entrained solids)	❑
Does the arrow on the sensor match the direction of flow of the medium? → 🗎 19?	❑
Is the tag name and labeling correct (visual inspection)?	❑
Is the device sufficiently protected from precipitation and direct sunlight?	❑
Are the securing screw and securing clamp tightened securely?	❑

7 Electrical connection

⚠ WARNING

Live parts! Incorrect work performed on the electrical connections can result in an electric shock.

- ▶ Set up a disconnecting device (switch or power-circuit breaker) to easily disconnect the device from the supply voltage.
- ▶ In addition to the device fuse, include an overcurrent protection unit with max. 16 A in the plant installation.

7.1 Electrical safety

In accordance with applicable national regulations.

7.2 Connecting requirements

7.2.1 Required tools

- For cable entries: Use corresponding tools
- For securing clamp (on aluminum housing): Allen screw3 mm
- For securing screw (for stainless steel housing): open-ended wrench 8 mm
- Wire stripper
- When using stranded cables: crimper for wire end ferrule

7.2.2 Requirements for connection cable

The connecting cables provided by the customer must fulfill the following requirements.

Permitted temperature range

- The installation guidelines that apply in the country of installation must be observed.
- The cables must be suitable for the minimum and maximum temperatures to be expected.

Power supply cable (incl. conductor for the inner ground terminal)

Standard installation cable is sufficient.

Signal cable

Pulse/frequency/switch output

Standard installation cable is sufficient.

Modbus RS485

Shielded twisted-pair cable.

See https://modbus.org "MODBUS over Serial Line Specification and Implementation Guide".

Cable diameter

- Cable glands supplied:
  M20 × 1.5 with cable Ø 6 to 12 mm (0.24 to 0.47 in)
- Spring terminals:
  Wire cross-sections 0.5 to 2.5 mm^2 (20 to 14 AWG)
- With Safety Barrier Promass 100:
  Plug-in screw terminals for wire cross-sections0.5 to 2.5 mm^2 (20 to 14 AWG)

7.2.3 Terminal assignment

Transmitter

Modbus RS485 connection version

For use in the non-hazardous area and Zone 2/Div. 2

Order code for "Output", option **M**

Depending on the housing version, the transmitters can be ordered with terminals or device plugs.

Order code for "Housing"	Connection methods available		Possible options for order code "Electrical connection"
	Output	Power supply	
Options **A**, **B**	Terminals	Terminals	▪ Option **A**: coupling M20x1 ▪ Option **B**: thread M20x1 ▪ Option **C**: thread G ½" ▪ Option **D**: thread NPT ½"
Options **A**, **B**	Device plug → 28	Terminals	▪ Option **L**: plug M12x1 + thread NPT ½" ▪ Option **N**: plug M12x1 + coupling M20 ▪ Option **P**: plug M12x1 + thread G ½" ▪ Option **U**: plug M12x1 + thread M20
Options **A**, **B**, **C**	Device plug → 28	Device plug → 28	Option **Q**: 2 x plug M12x1
Order code for "Housing": ▪ Option **A**: compact, coated aluminum ▪ Option **B**: compact, hygienic, stainless ▪ Option **C**: ultra-compact, hygienic, stainless			

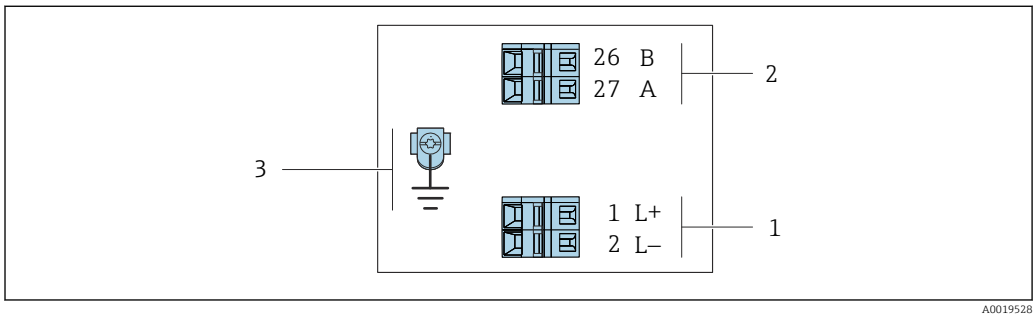

7 *Modbus RS485 terminal assignment, connection version for use in non-hazardous areas and Zone 2/Div. 2*

1 *Power supply: DC 24 V*
2 *Modbus RS485*
3 *Connection for cable shield (IO signals) if present and/or protective ground from the supply voltage if present. Not for option C "Ultra-compact, hygienic, stainless".*

Order code for "Output"	Terminal number			
	Power supply		Output	
	1 (L+)	2 (L-)	26 (B)	27 (A)
Option **M**	DC 24 V		Modbus RS485	
Order code for "Output": Option **M**: Modbus RS485, for use in non-hazardous areas and Zone 2/Div. 2				

Modbus RS485 connection version

For use in the intrinsically safe area. Connection via Safety Barrier Promass 100.

Order code for "Output", option **M**

Depending on the housing version, the transmitters can be ordered with terminals or device plugs.

Order code for "Housing"	Connection methods available		Possible options for order code "Electrical connection"
	Output	Power supply	
Options **A**, **B**	Terminals	Terminals	▪ Option **A**: coupling M20x1 ▪ Option **B**: thread M20x1 ▪ Option **C**: thread G ½" ▪ Option **D**: thread NPT ½"
A, **B**, **C**	Device plug → 📄 28		Option **I**: plug M12x1
Order code for "Housing": ▪ Option **A**: compact, coated aluminum ▪ Option **B**: compact, hygienic, stainless ▪ Option **C**: ultra-compact, hygienic, stainless			

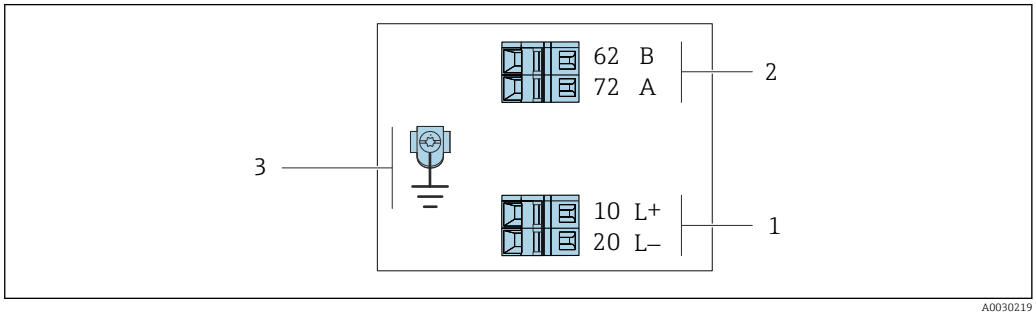

8 Modbus RS485 terminal assignment, connection version for use in intrinsically safe areas (connection via Safety Barrier Promass 100)

1 *Intrinsically safe power supply*
2 *Modbus RS485*
3 *Connection for cable shield (IO signals) if present and/or protective ground from the supply voltage if present. Not for option C "Ultra-compact, hygienic, stainless".*

Order code for "Output"	10 (L+)	20 (L-)	62 (B)	72 (A)
Option **M**	Intrinsically safe supply voltage		Modbus RS485, intrinsically safe	
Order code for "Output": Option **M**: Modbus RS485, for use in the intrinsically safe area (connection via Safety Barrier Promass 100)				

Safety Barrier Promass 100

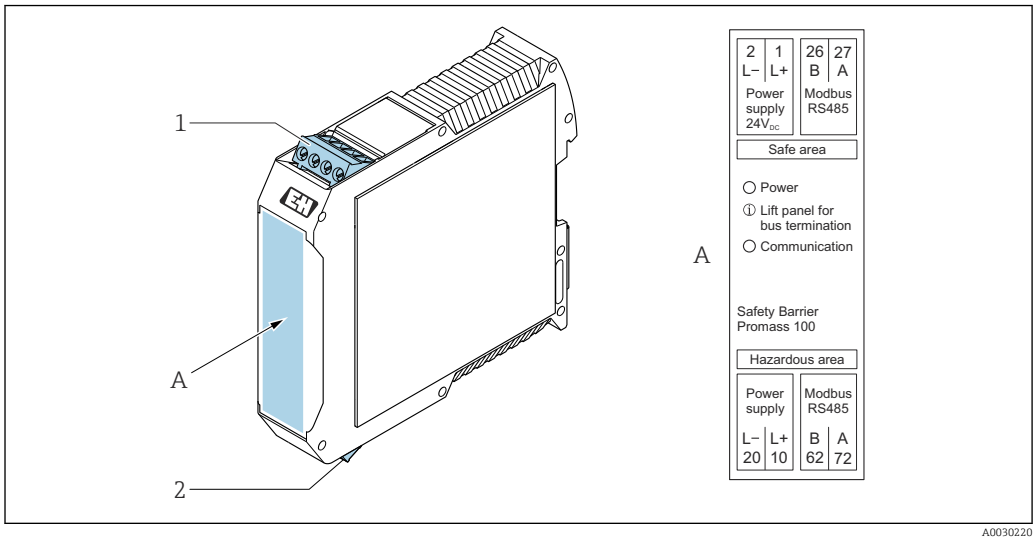

9 Safety Barrier Promass 100 with terminals

1 Non-hazardous area: Zone 2; Class I, Division 2
2 Intrinsically safe area

7.2.4 Pin assignment, device plug

Supply voltage

Promass 100

Device plug for signal transmission with supply voltage (device side), MODBUS RS485 (intrinsically safe)

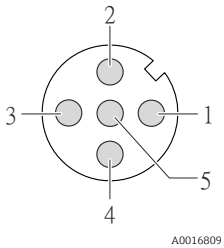

Pin	Assignment	
1	L+	Supply voltage, intrinsically safe
2	A	Modbus RS485, intrinsically safe
3	B	
4	L-	Supply voltage, intrinsically safe
5		Grounding/shielding
Coding		**Plug/socket**
A		Plug

Device plug for supply voltage (device side), MODBUS RS485 (not intrinsically safe)

For use in the non-hazardous area and Zone 2/Div. 2.

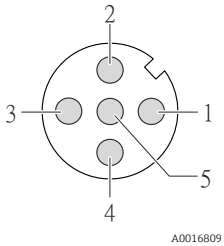

Pin	Assignment	
1	L+	DC 24 V
2		Not used
3		Not used
4	L-	DC 24 V
5		Grounding/shielding
Coding		**Plug/socket**
A		Plug

Signal transmission

Promass

Device plug for signal transmission (device side), MODBUS RS485 (not intrinsically safe)

For use in the non-hazardous area and Zone 2/Div. 2.

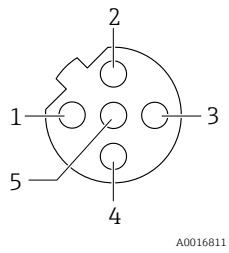

Pin	Assignment	
1		Not used
2	A	Modbus RS485
3		Not used
4	B	Modbus RS485
5		Grounding/shielding
Coding		**Plug/socket**
B		Socket

7.2.5 Shielding and grounding

Shielding and grounding concept

1. Maintain electromagnetic compatibility (EMC).
2. Take explosion protection into consideration.
3. Pay attention to the protection of persons.
4. Comply with national installation regulations and guidelines.
5. Observe cable specifications .
6. Keep the stripped and twisted lengths of cable shield to the ground terminal as short as possible.
7. Shield cables fully.

Grounding of the cable shield

NOTICE

In systems without potential matching, the multiple grounding of the cable shield causes mains frequency equalizing currents!

Damage to the bus cable shield.

- Only ground the bus cable shield to either the local ground or the protective ground at one end.
- Insulate the shield that is not connected.

To comply with EMC requirements:

1. Ensure the cable shield is grounded to the potential matching line at multiple points.
2. Connect every local ground terminal to the potential matching line.

7.2.6 Preparing the device

NOTICE

Insufficient sealing of the housing!

Operational reliability of the measuring device could be compromised.

- Use suitable cable glands corresponding to the degree of protection.

1. Remove dummy plug if present.
2. If the measuring instrument is supplied without cable glands:
   Provide suitable cable gland for corresponding connecting cable.

3. If the measuring instrument is supplied with cable glands:
   Observe requirements for connecting cables → 25.

7.3 Connecting the device

NOTICE

An incorrect connection compromises electrical safety!

- Only properly trained specialist staff may perform electrical connection work.
- Observe applicable federal/national installation codes and regulations.
- Comply with local workplace safety regulations.
- Always connect the protective ground cable ⏚ before connecting additional cables.
- When using in potentially explosive atmospheres, observe the information in the device-specific Ex documentation.

7.3.1 Connecting the transmitter

The connection of the transmitter depends on the following order codes:
- Housing version: compact or ultra-compact
- Connection version: device plug or terminals

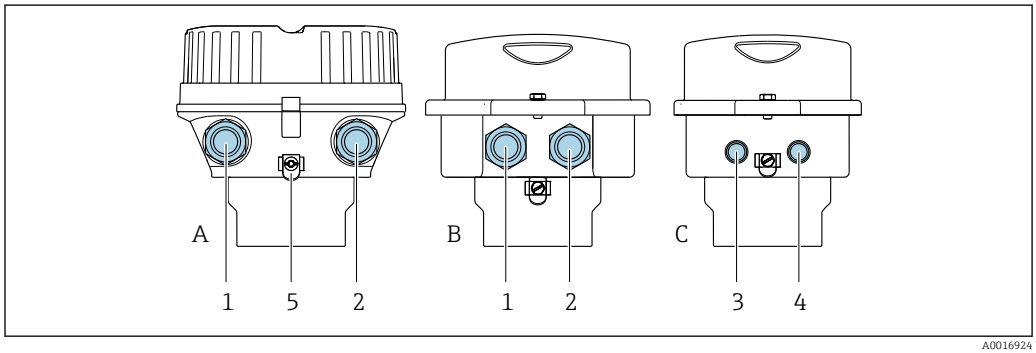

10 Housing versions and connection versions

A Housing version: compact, coated, aluminum
B Housing version: compact, hygienic, stainless
C Housing version: ultra-compact, hygienic, stainless
1 Cable entry or device plug for signal transmission
2 Cable entry or device plug for supply voltage
3 Device plug for signal transmission
4 Device plug for supply voltage
5 Ground terminal. Cable lugs, pipe clips or ground disks are recommended for optimization of the grounding/shielding.

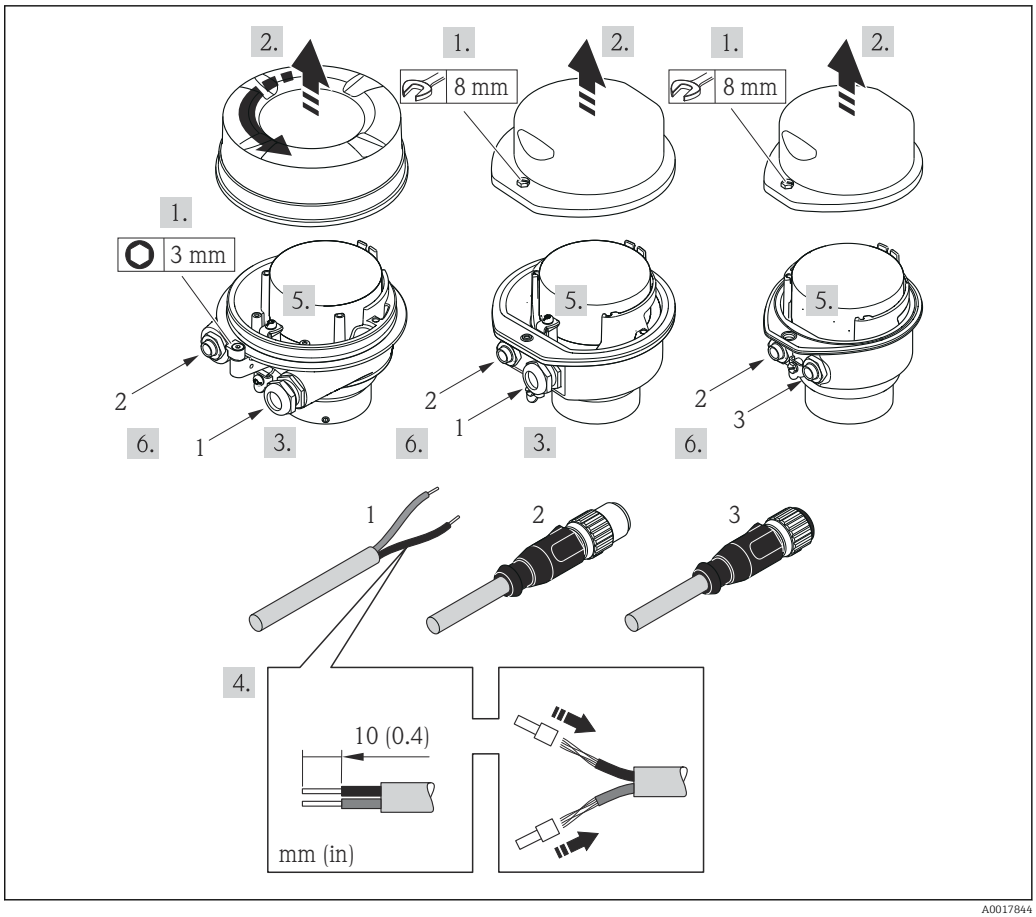

11 Device versions with connection examples

1 Cable
2 Device plug for signal transmission
3 Device plug for supply voltage

For device version with device plug: follow step 6 only.

1. Depending on the housing version, loosen the securing clamp or fixing screw of the housing cover.
2. Depending on the housing version, unscrew or open the housing cover.
3. Push the cable through the cable entry . To ensure tight sealing, do not remove the sealing ring from the cable entry.
4. Strip the cable and cable ends. In the case of stranded cables, also fit wire end ferrules.
5. Connect the cable in accordance with the terminal assignment or the device plug pin assignment .
6. Depending on the device version, tighten the cable glands or insert the device plug and tighten .
7. Enable the terminating resistor if applicable .
8. **NOTICE**

   Housing degree of protection voided due to insufficient sealing of the housing.

   ▶ Screw in the screw without using any lubricant. The threads on the cover are coated with a dry lubricant.

   Reassemble the transmitter in the reverse order.

7.3.2 Connecting Safety Barrier Promass 100

In the case of the device version with Modbus RS485, intrinsically safe, the transmitter must be connected to Safety Barrier Promass 100.

1. Strip the cable ends. In the case of stranded cables, also fit wire end ferrules.
2. Connect the cable according to the terminal assignment → 26.
3. Where applicable, enable the terminating resistor in Safety Barrier Promass 100 → 33.

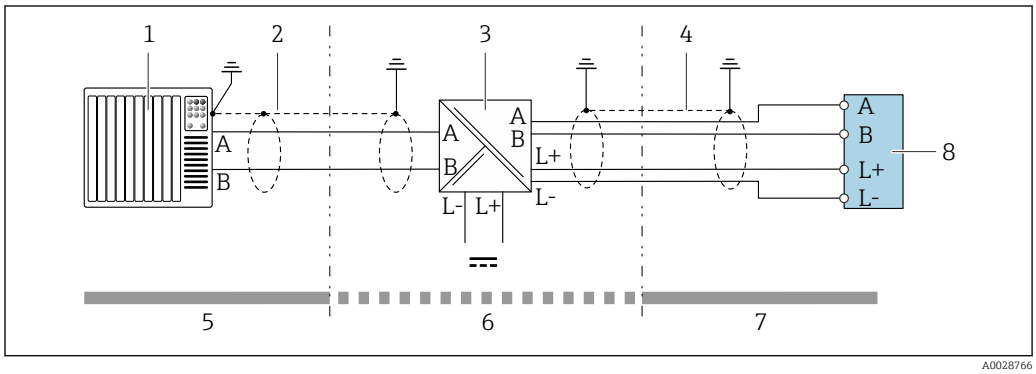

12 *Electrical connection between the transmitter and Safety Barrier Promass 100*

1 *Automation system (e.g. PLC)*
2 *Observe cable specification → 25*
3 *Safety Barrier Promass 100: Terminal assignment → 28*
4 *Observe cable specification*
5 *Non-hazardous area*
6 *Non-hazardous area and Zone 2/Div. 2*
7 *Intrinsically safe area*
8 *Transmitter: Terminal assignment → 26*

7.4 Potential equalization

7.4.1 Requirements

For potential equalization:
- Pay attention to in-house grounding concepts
- Take account of operating conditions like the pipe material and grounding
- Connect the medium, sensor and transmitter to the same electric potential
- Use a ground cable with a minimum cross-section of 6 mm^2 (10 AWG) and a cable lug for potential equalization connections

7.5 Special connection instructions

7.5.1 Connection examples

Pulse output/frequency output/switch output

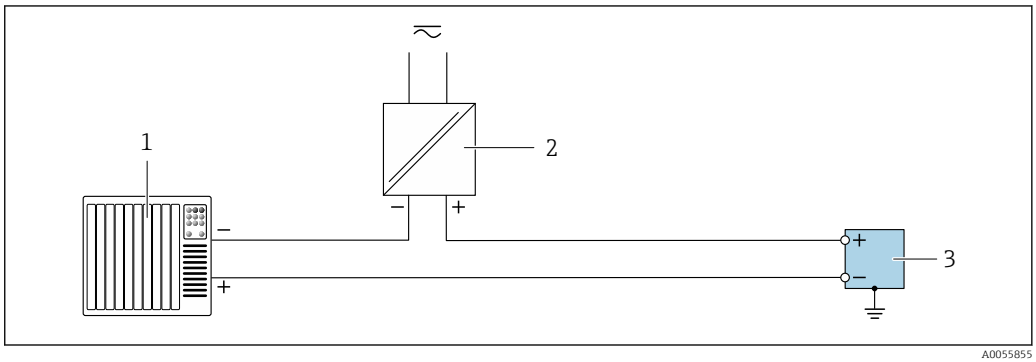

13 Connection example for pulse output/frequency output/switch output (passive)

1 Automation system with pulse input/frequency input/switch input (e.g. PLC)
2 Power supply
3 Transmitter with pulse output/frequency output/switch output (passive)

Modbus RS485

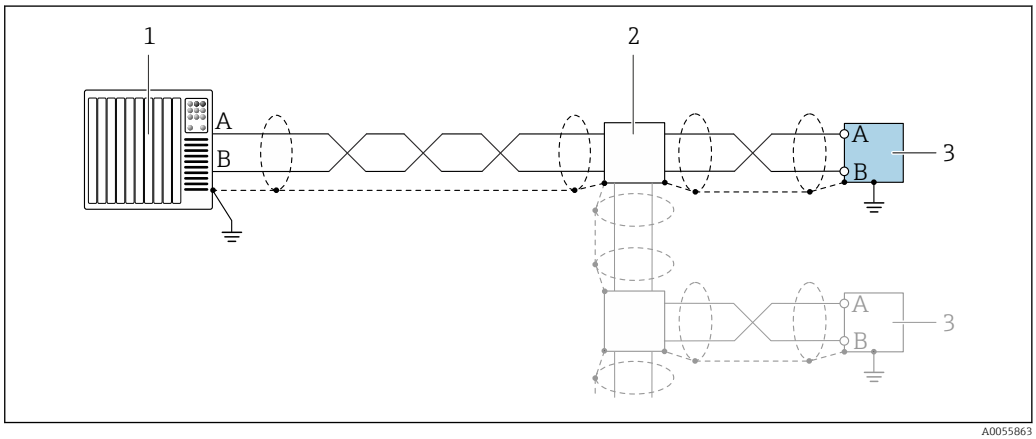

14 Connection example for Modbus RS485

1 Automation system with Modbus master (e.g. PLC)
2 Optional distribution box
3 Transmitter with Modbus RS485

7.6 Hardware settings

7.6.1 Activating the terminating resistor

Modbus RS485

To avoid incorrect communication transmission caused by impedance mismatch, connect the Modbus RS485 cable correctly to the start and end of the bus segment.

If the transmitter is used in the non-hazardous area or Zone 2/Div. 2

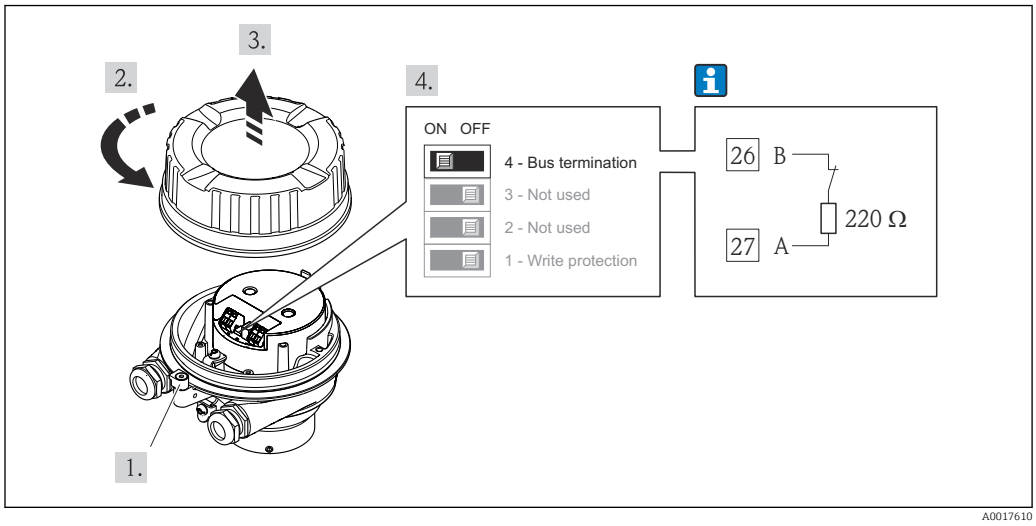

15 *Terminating resistor can be enabled via DIP switch on the electronics module*

If the transmitter is used in the intrinsically safe area

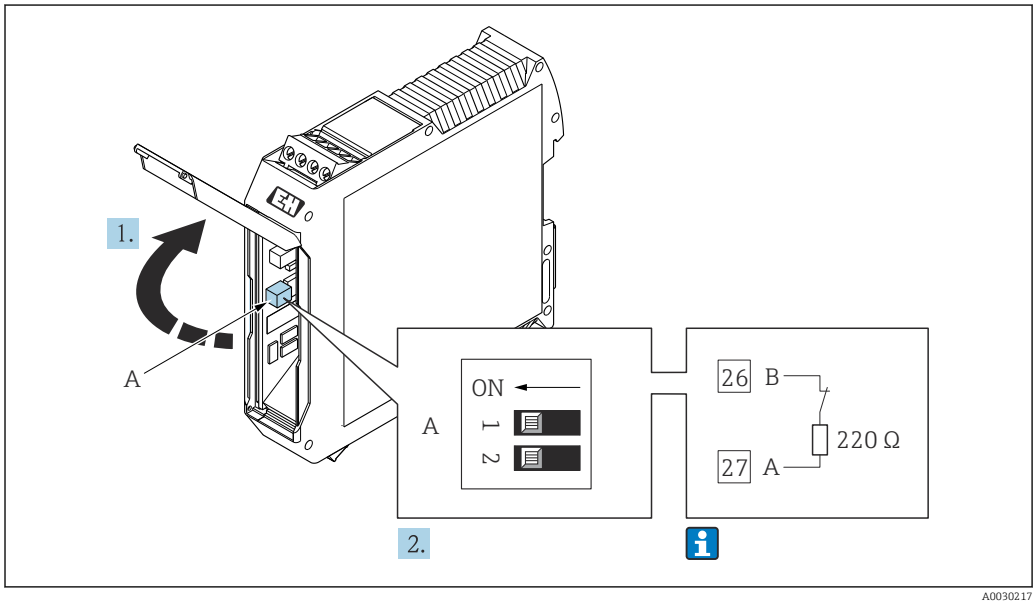

16 *Terminating resistor can be enabled via DIP switch in the Safety Barrier Promass 100*

7.7 Ensuring the degree of protection

The measuring instrument fulfills all the requirements for the degree of protection IP66/67, Type 4X enclosure.

To ensure degree of protection IP66/67, Type 4X enclosure, carry out the following steps after making the electrical connection:

1. Check that the housing seals are clean and fitted correctly.
2. Dry, clean or replace the seals if necessary.
3. Tighten all housing screws and screw covers.
4. Firmly tighten the cable glands.

5. To ensure that moisture does not enter the cable entry:
Route the cable so that it loops down before the cable entry ("water trap").

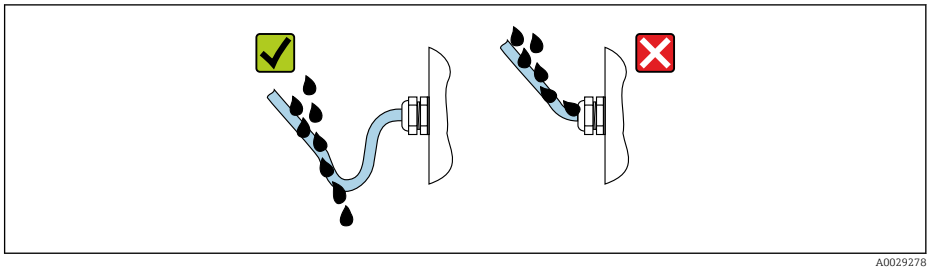

A0029278

6. The supplied cable glands and plastic dummy plugs used for the threaded cable entries do not ensure degree of protection IP66/67, Type 4X enclosure. To achieve this degree of protection, cable glands and plastic dummy plugs that are not used must be replaced by threaded dummy plugs with the degree of protection IP66/67, Type 4X enclosure.

7.8 Post-connection check

Are the device and cable undamaged (visual inspection)?	❑
Do the cables used meet the requirements → 🗎 25?	❑
Are the mounted cables strain-relieved and fixed securely in place?	❑
Are all cable glands installed, securely tightened and leak-tight? Cable run with "water trap" → 🗎 34?	❑
Depending on the device version: Are all the device plugs firmly tightened → 🗎 30?	❑
▪ Does the supply voltage match the specifications on the transmitter nameplate → 🗎 92? ▪ For device version with Modbus RS485 intrinsically safe: does the supply voltage match the specifications on the nameplate of the Safety Barrier Promass 100 → 🗎 92?	❑
Is the terminal assignment → 🗎 26 or the device plug pin assignment → 🗎 28 correct?	❑
If supply voltage is present: ▪ Is the power LED on the electronics module of the transmitter lit green → 🗎 11? ▪ For device version with Modbus RS485 intrinsically safe, if supply voltage is present, is the power LED on the Safety Barrier Promass 100 → 🗎 11 lit?	❑
Depending on the device version: ▪ Have the fixing screws been tightened with the correct tightening torque? ▪ Is the securing clamp securely tightened?	❑

8 Operation options

8.1 Overview of operation options

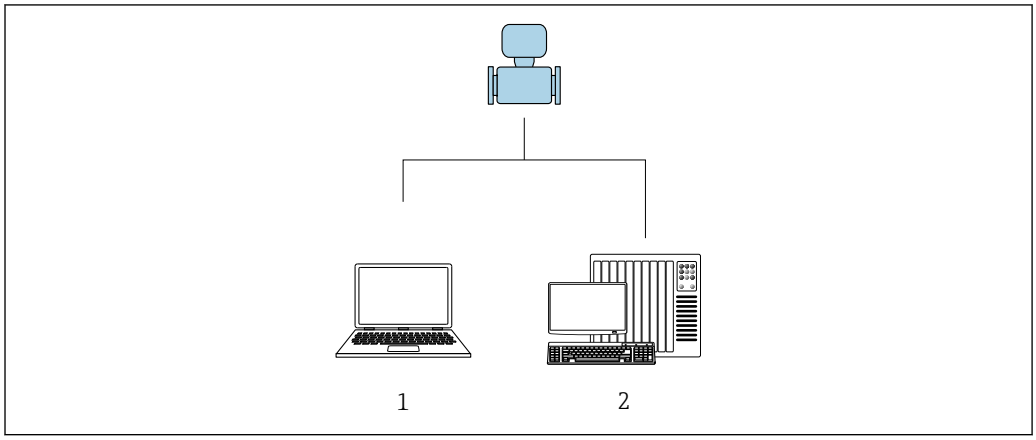

1 Computer with "FieldCare" or "DeviceCare" operating tool via Commubox FXA291 and service interface
2 Automation system (e.g. PLC)

8.2 Structure and function of the operating menu

8.2.1 Structure of the operating menu

For an overview of the operating menu for experts: see the "Description of Device Parameters" document supplied with the device → 110

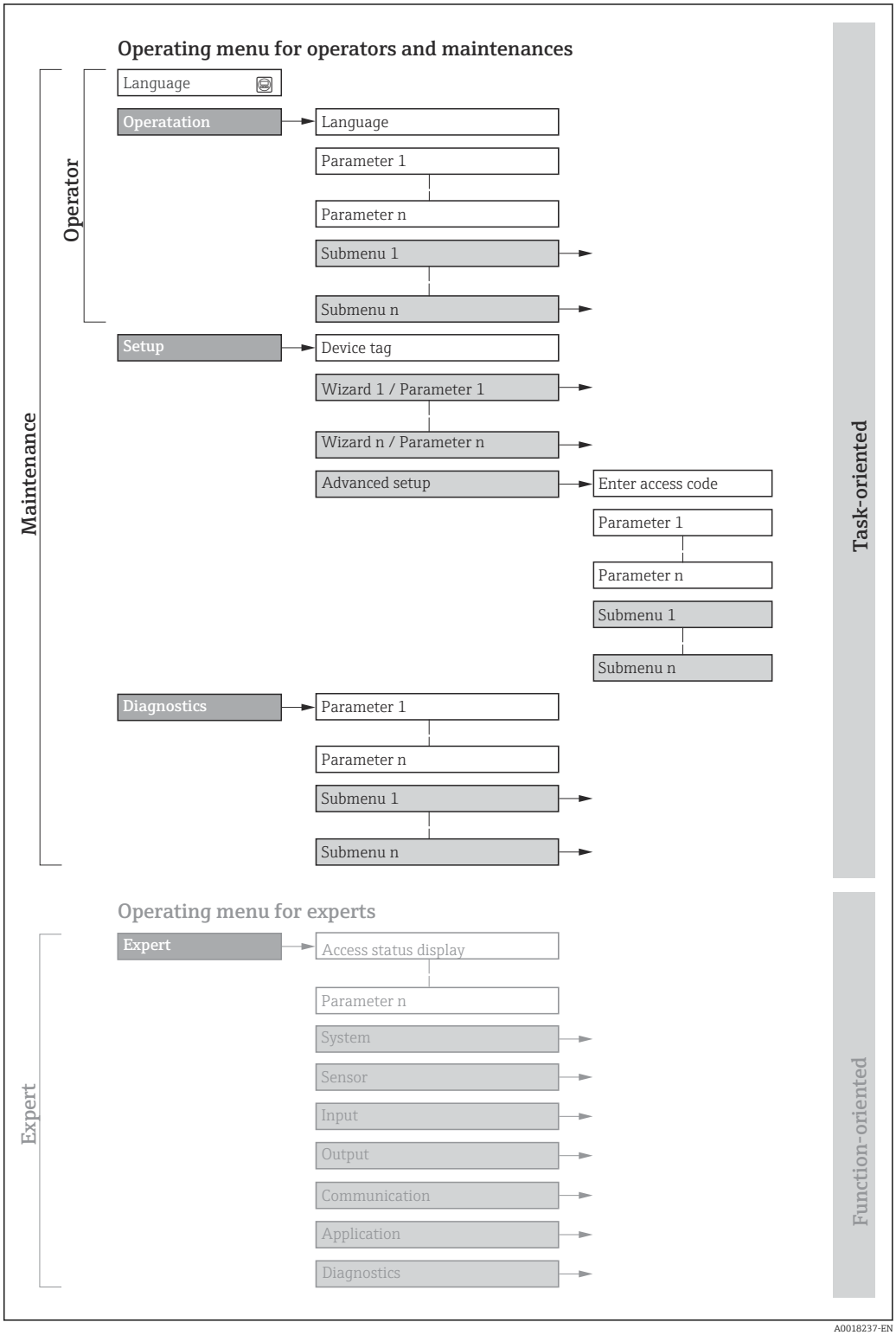

17 *Schematic structure of the operating menu*

8.2.2 Operating philosophy

The individual parts of the operating menu are assigned to certain user roles (e.g. operator, maintenance etc.). Each user role contains typical tasks within the device life cycle.

Menu/parameter		User role and tasks	Content/meaning
Language	Task-oriented	**Role "Operator", "Maintenance"** Tasks during operation: Reading measured values	Defining the operating language
Operation			▪ Defining the operating language ▪ Resetting and controlling totalizers ▪ Resetting and controlling totalizers
Setup		**"Maintenance" role** Commissioning: ▪ Configuring the measurement ▪ Configuring the communication interface	Submenus for fast commissioning: ▪ Configuring the system units ▪ Defining the medium ▪ Configuring the digital communication interface ▪ Configuring the operational display ▪ Configuring the low flow cut off ▪ Configuring the detection of partially filled and empty pipes Advanced setup ▪ For more customized configuration of the measurement (adaptation to special measuring conditions) ▪ Configuring totalizers ▪ Administration (define access code, reset measuring instrument)
Diagnostics		**"Maintenance" role** Troubleshooting: ▪ Diagnostics and elimination of process and device errors ▪ Measured value simulation	Contains all parameters for error detection and analyzing process and device errors: ▪ Diagnostic list Contains up to 5 currently pending diagnostic messages. ▪ Event logbook Contains event messages that have occurred. ▪ Device information Contains information for identifying the device. ▪ Measured values Contains all current measured values. ▪ Heartbeat Technology The functionality of the device is checked on demand and the verification results are documented. ▪ Simulation Used to simulate measured values or output values. ▪ Testpoints
Expert	Function-oriented	Tasks that require detailed knowledge of the function of the device: ▪ Commissioning measurements under difficult conditions ▪ Optimal adaptation of the measurement to difficult conditions ▪ Detailed configuration of the communication interface ▪ Error diagnostics in difficult cases	Contains all the parameters of the device and makes it possible to access these parameters directly using an access code. The structure of this menu is based on the function blocks of the device: ▪ System Contains all higher-level device parameters that do not affect measurement or measured value communication. ▪ Sensor Configuring the measurement. ▪ Communication Configuring the digital communication interface. ▪ Application Configuring the functions that go beyond the actual measurement (e.g. totalizer). ▪ Diagnostics Error detection and analysis of process and device errors and for device simulation and the Heartbeat Technology menu.

8.3 Displaying the measured values via the local display (optionally available)

8.3.1 Operational display

The local display is optionally available:

Order code for "Display; operation", option B "'4-line, illuminated; via communication".

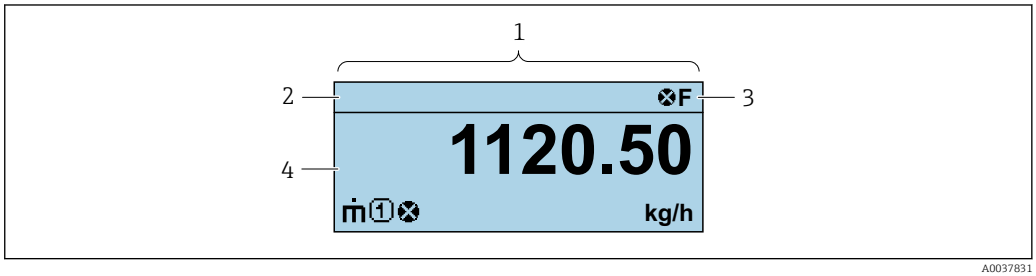

1 *Operational display*
2 *Tag name*
3 *Status area*
4 *Display area for measured values (4-line)*

Status area

The following symbols appear in the status area of the operational display at the top right:

- Status signals
  - **F**: Failure
  - **C**: Function check
  - **S**: Out of specification
  - **M**: Maintenance required
- Diagnostic behavior
  - ⊗: Alarm
  - ⚠: Warning
- 🔒: Locking (the device is locked via the hardware)
- ⇆: Communication (communication via remote operation is active)

Display area

In the display area, each measured value is prefaced by certain symbol types for further description:

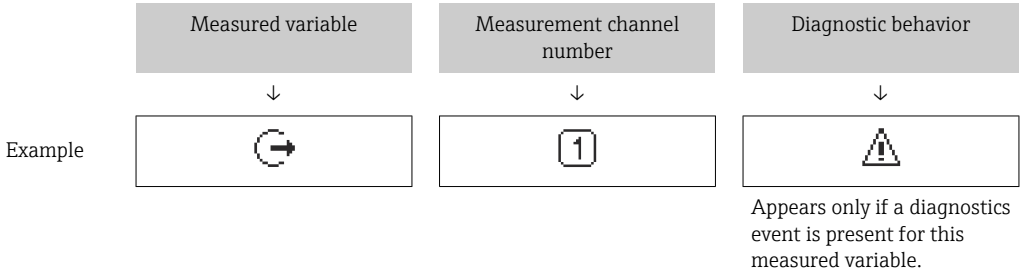

Measured variables

Symbol	Meaning
ṁ	Mass flow
U̇	▪ Volume flow ▪ Corrected volume flow

ρ	▪ Density ▪ Reference density
	Temperature
Σ	Totalizer The measurement channel number indicates which of the three totalizers is displayed.
	Output

Measurement channel numbers

Symbol	Meaning
1 ... 4	Measurement channel 1 to 4
The measurement channel number is displayed only if more than one channel is present for the same measured variable type (e.g. Totalizer 1 to 3).	

Diagnostic behavior

The diagnostic behavior pertains to a diagnostic event that is relevant to the displayed measured variable. For information on the symbols

The number and display format of the measured values can only be configured via the control system.

8.3.2 User roles and related access authorization

The two user roles "Operator" and "Maintenance" have different write access to the parameters if the customer defines a user-specific access code. This protects the device configuration from unauthorized access .

Defining access authorization for user roles

An access code is not yet defined when the device is delivered from the factory. Access authorization (read and write access) to the device is not restricted and corresponds to the "Maintenance" user role.

- Define the access code.
  - The "Operator" user role is redefined in addition to the "Maintenance" user role. Access authorization differs for the two user roles.

Access authorization to parameters: "Maintenance" user role

Access code status	Read access	Write access
An access code has not yet been defined (factory setting).	✔	✔
After an access code has been defined.	✔	✔ [1]

1) The user only has write access after entering the access code.

Access authorization to parameters: "Operator" user role

Access code status	Read access	Write access
After an access code has been defined.	✔	– [1]

1) Despite the defined access code, certain parameters can always be modified and thus are excluded from the write protection as they do not affect the measurement: write protection via access code

The user role with which the user is currently logged on is indicated by the .
Navigation path:

8.4 Access to the operating menu via the operating tool

8.4.1 Connecting the operating tool

Via service interface (CDI)

Modbus RS485

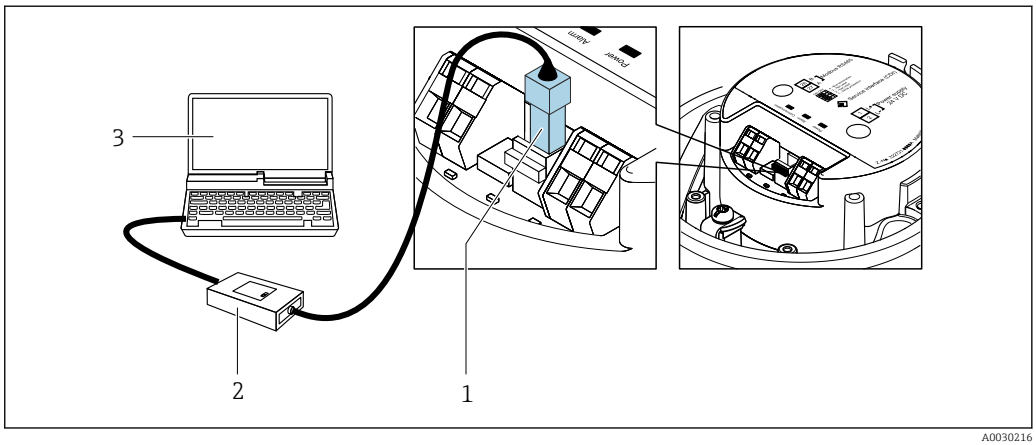

A0030216

1 Service interface (CDI) of the measuring instrument
2 Commubox FXA291
3 Computer with FieldCare operating tool with COM DTM "CDI Communication FXA291"

8.4.2 FieldCare

Function range

FDT-based (Field Device Technology) plant asset management tool from Endress+Hauser. It can configure all smart field units in a system and helps you manage them. By using the status information, it is also a simple but effective way of checking their status and condition.

Access is via:
CDI service interface

Typical functions:
- Transmitter parameter configuration
- Loading and saving of device data (upload/download)
- Documentation of the measuring point
- Visualization of the measured value memory (line recorder) and event logbook

- Operating Instructions BA00027S
- Operating Instructions BA00059S

Source for device description files → 43

8.4.3 DeviceCare

Function range

Tool for connecting and configuring Endress+Hauser field devices.

The fastest way to configure Endress+Hauser field devices is with the dedicated "DeviceCare" tool. Together with the device type managers (DTMs) it presents a convenient, comprehensive solution.

Innovation brochure IN01047S

Source for device description files → 43

9 System integration

9.1 Overview of device description files

9.1.1 Current version data for the device

Firmware version	01.03.zz	▪ On the title page of the manual ▪ On the transmitter nameplate ▪ Firmware version Diagnostics → Device information → Firmware version
Release date of firmware version	10.2014	---

For an overview of the various firmware versions for the device

9.1.2 Operating tools

The suitable device description file for the individual operating tools is listed in the table below, along with information on where the file can be acquired.

FieldCare	▪ www.endress.com → Downloads area ▪ USB stick (contact Endress+Hauser) ▪ E-mail → Downloads area
DeviceCare	▪ www.endress.com → Downloads area ▪ E-mail → Downloads area

9.2 ModbusRS485 information

9.2.1 Function codes

Function codes are used to define which read or write action is carried out via the Modbus protocol. The measuring instrument supports the following function codes:

Code	Name	Description	Application
03	Read holding register	The controller reads one or more Modbus registers of the measuring instrument. A maximum of 125 consecutive registers can be read with one telegram: 1 register = 2 bytes The measuring instrument does not make a distinction between function codes 03 and 04; these codes therefore yield the same result.	Read device parameters with read and write access Example: Read mass flow
04	Read input register	The controller reads one or more Modbus registers of the measuring instrument. A maximum of 125 consecutive registers can be read with one telegram: 1 register = 2 bytes The measuring instrument does not make a distinction between function codes 03 and 04; these codes therefore yield the same result.	Read device parameters with read access Example: Read totalizer value

Code	Name	Description	Application
06	Write single registers	Controller writes a new value to **one** Modbus register of the measuring instrument. Function code 16 can be used to write multiple registers with a single telegram.	Writing only 1 device parameter Example: Reset totalizer
08	Diagnostics	Controller checks the communication connection to the measuring instrument. The following “Diagnostics codes” are supported: ▪ Sub-function 00 = return query data (loopback test) ▪ Sub-function 02 = return diagnostics register	
16	Write multiple registers	Controller writes a new value to multiple Modbus registers of the measuring instrument. A maximum of 120 consecutive registers can be written with one telegram. If the required device parameters are not available as a group, yet must nevertheless be addressed with a single telegram, use Modbus data map → 46	Writing multiple device parameters Example: ▪ Mass flow unit ▪ Mass unit
23	Read/Write multiple registers	Controller reads and writes a maximum of 118 Modbus registers of the measuring instrument simultaneously with one telegram. Write access is executed **before** read access.	Writing and reading multiple device parameters Example: ▪ Read mass flow ▪ Reset the totalizer

Broadcast messages are only allowed with function codes 06, 16 and 23.

9.2.2 Register information

For an overview of device parameters and their corresponding Modbus register information, refer to the "ModbusRS485 section in the "Description of Device Parameters" documentation.register information → 43.

9.2.3 Response time

Response time of the measuring instrument to the request telegram of the Modbus master: typically 3 to 5 ms

9.2.4 Data types

The measuring device supports the following data types:

FLOAT (floating point number IEEE 754) Data length = 4 bytes (2 registers)			
Byte 3	Byte 2	Byte 1	Byte 0
SEEEEEEE	EMMMMMMM	MMMMMMMM	MMMMMMMM
S = sign, E = exponent, M = mantissa			

INTEGER Data length = 2 bytes (1 register)	
Byte 1	Byte 0
Most significant byte (MSB)	Least significant byte (LSB)

STRING Data length = depends on the device parameter, e.g. presentation of a device parameter with a data length = 18 bytes (9 registers)				
Byte 17	Byte 16	...	Byte 1	Byte 0
Most significant byte (MSB)		...		Least significant byte (LSB)

9.2.5 Byte transmission sequence

Byte addressing, i.e. the transmission sequence of the bytes, is not specified in the Modbus specification. For this reason, it is important to coordinate or match the addressing method between the master and slave during commissioning. This can be configured in the measuring device using the **Byte order** parameter.

The bytes are transmitted depending on the selection in the **Byte order** parameter:

FLOAT				
	Sequence			
Options	1.	2.	3.	4.
1 – 0 – 3 – 2 *	Byte 1 (MMMMMMMM)	Byte 0 (MMMMMMMM)	Byte 3 (SEEEEEEE)	Byte 2 (EMMMMMMM)
0 – 1 – 2 – 3	Byte 0 (MMMMMMMM)	Byte 1 (MMMMMMMM)	Byte 2 (EMMMMMMM)	Byte 3 (SEEEEEEE)
2 – 3 – 0 – 1	Byte 2 (EMMMMMMM)	Byte 3 (SEEEEEEE)	Byte 0 (MMMMMMM)	Byte 1 (MMMMMMM)
3 – 2 – 1 – 0	Byte 3 (SEEEEEEE)	Byte 2 (EMMMMMMM)	Byte 1 (MMMMMMMM)	Byte 0 (MMMMMMMM)
* = factory setting, S = sign, E = exponent, M = mantissa				

INTEGER		
	Sequence	
Options	1.	2.
1 – **0** – 3 – 2 * 3 – 2 – **1** – **0**	Byte 1 (MSB)	Byte 0 (LSB)
0 – **1** – 2 – 3 2 – 3 – **0** – **1**	Byte 0 (LSB)	Byte 1 (MSB)
* = factory setting, MSB = most significant byte, LSB = least significant byte		

STRING Presentation taking the example of a device parameter with a data length of 18 bytes.					
	Sequence				
Options	1.	2.	...	17.	18.
1 – **0** – 3 – 2 * 3 – 2 – **1** – **0**	Byte 17 (MSB)	Byte 16	...	Byte 1	Byte 0 (LSB)

0 – **1** – 2 – 3 2 – 3 – **0** – **1**	Byte 16	Byte 17 (MSB)	...	Byte 0 (LSB)	Byte 1
* = factory setting, MSB = most significant byte, LSB = least significant byte					

9.2.6 Modbus data map

Function of the Modbus data map

To ensure that retrieving device parameters via Modbus RS485 is no longer limited to individual device parameters or a group of consecutive device parameters, the measuring instrument provides a special memory area: the Modbus data map for a maximum of 16 device parameters.

Grouping of device parameters is flexible and the Modbus master can read or write to the entire data block simultaneously with a single request telegram.

Structure of the Modbus data map

The Modbus data map consists of two data sets:
- Scan list: Configuration area
  The device parameters to be grouped are defined in a list by entering their ModbusRS485 register addresses in the list.
- Data area
  The measuring instrument reads out the register addresses entered in the scan list cyclically and writes the associated device data (values) to the data area.

For an overview of device parameters and their corresponding Modbus register information, refer to the "ModbusRS485 section in the "Description of Device Parameters" documentation.register information → 📄 43.

Scan list configuration

For configuration, the ModbusRS485 register addresses of the device parameters to be grouped must be entered in the scan list. Please note the following basic requirements of the scan list:

Max. entries	16 device parameters
Supported device parameters	Only parameters with the following characteristics are supported: ▪ Access type: read or write access ▪ Data type: float or integer

Configuration of the scan list via FieldCare or DeviceCare

Carried out using the operating menu of the measuring instrument:
Expert → Communication → Modbus data map → Scan list register 0 to 15

Scan list	
No.	**Configuration register**
0	Scan list register 0
...	...
15	Scan list register 15

Configuration of the scan list via Modbus RS485

Carried out using register addresses 5001-5016

Scan list			
No.	**Modbus RS485 register**	**Data type**	**Configuration register**
0	5001	Integer	Scan list register 0
...	...	Integer	...
15	5016	Integer	Scan list register 15

Reading out data via Modbus RS485

The Modbus master accesses the data area of the Modbus data map to read out the current values of the device parameters defined in the scan list.

Master access to data area	Via register addresses 5051-5081

Data area				
Device parameter value	**Modbus RS485 register**		**Data type***	**Access****
	Start register	**End register (Float only)**		
Value of scan list register 0	5051	5052	Integer/float	Read/write
Value of scan list register 1	5053	5054	Integer/float	Read/write
Value of scan list register ...	...	...	...	...
Value of scan list register 15	5081	5082	Integer/float	Read/write

***** Data type depends on the device parameters entered in the scan list.
****** Data access depends on the device parameters entered in the scan list. If the device parameter entered supports read and write access, the parameter can also be accessed via the data area.

10 Commissioning

10.1 Post-installation and post-connection check

Before commissioning the device:

- ▶ Make sure that the post-installation and post-connection checks have been performed successfully.

- Checklist for "Post-installation" check→ 📄 24
- Checklist for "Post-connection" check→ 📄 35

10.2 Connecting via FieldCare

- For connecting FieldCare
- For connecting via FieldCare
- For user interface of FieldCare

10.3 Setting the operating language

Factory setting: English or ordered local language

The operating language can be set in FieldCare or DeviceCare: Operation → Display language

10.4 Configuring the device

The **Setup** menu with its submenus contains all the parameters needed for standard operation.

Setup	
Device tag	→ 📄 49
▶ **System units**	→ 📄 49
▶ **Medium selection**	→ 📄 52
▶ **Communication**	→ 📄 53
▶ **Low flow cut off**	→ 📄 55
▶ **Partially filled pipe detection**	
▶ **Advanced setup**	→ 📄 57

10.4.1 Defining the tag name

To enable fast identification of the measuring point within the system, you can enter a unique designation using the **Device tag** parameter and thus change the factory setting.

ℹ Enter the tag name in the "FieldCare" operating tool

Navigation
"Setup" menu → Device tag

Parameter overview with brief description

Parameter	Description	User entry
Device tag	Enter the name for the measuring point.	Max. 32 characters, such as letters, numbers or special characters (e.g. @, %, /).

10.4.2 Setting the system units

In the **System units** submenu the units of all the measured values can be set.

The number of submenus and parameters can vary depending on the device version. Certain submenus and parameters in these submenus are not described in the Operating Instructions. Instead a description is provided in the Special Documentation for the device ("Supplementary documentation").

Navigation
"Setup" menu → Advanced setup → System units

▶ System units	
Mass flow unit	→ 📄 50
Mass unit	→ 📄 50
Volume flow unit	→ 📄 50
Volume unit	→ 📄 50
Corrected volume flow unit	→ 📄 50
Corrected volume unit	→ 📄 50
Density unit	→ 📄 50
Reference density unit	→ 📄 50
Temperature unit	→ 📄 51
Pressure unit	→ 📄 51

Parameter overview with brief description

Parameter	Description	Selection	Factory setting
Mass flow unit	Select mass flow unit. *Effect* The selected unit applies to: ▪ Output ▪ Low flow cut off ▪ Simulation process variable	Unit choose list	Country-specific: ▪ kg/h ▪ lb/min
Mass unit	Select mass unit.	Unit choose list	Country-specific: ▪ kg ▪ lb
Volume flow unit	Select volume flow unit. *Effect* The selected unit applies to: ▪ Output ▪ Low flow cut off ▪ Simulation process variable	Unit choose list	Country-specific: ▪ l/h ▪ gal/min (us)
Volume unit	Select volume unit.	Unit choose list	Country-specific: ▪ l (DN > 150 (6"): **m³** option) ▪ gal (us)
Corrected volume flow unit	Select corrected volume flow unit. *Effect* The selected unit applies to: **Corrected volume flow** parameter (→ 🗎 66)	Unit choose list	Country-specific: ▪ Nl/h ▪ Sft³/min
Corrected volume unit	Select corrected volume unit.	Unit choose list	Country-specific: ▪ Nl ▪ Sft³
Reference density unit	Select reference density unit.	Unit choose list	Country-specific ▪ kg/Nl ▪ lb/Sft³
Density unit	Select density unit. *Effect* The selected unit applies to: ▪ Output ▪ Simulation process variable ▪ Density adjustment (**Expert** menu)	Unit choose list	Country-specific: ▪ kg/l ▪ lb/ft³
Density 2 unit	Select second density unit.	Unit choose list	Country-specific: ▪ kg/l ▪ lb/ft³

Parameter	Description	Selection	Factory setting
Temperature unit	Select temperature unit. *Effect* The selected unit applies to: ▪ **Electronic temperature** parameter (6053) ▪ **Maximum value** parameter (6051) ▪ **Minimum value** parameter (6052) ▪ **External temperature** parameter (6080) ▪ **Maximum value** parameter (6108) ▪ **Minimum value** parameter (6109) ▪ **Carrier pipe temperature** parameter (6027) ▪ **Maximum value** parameter (6029) ▪ **Minimum value** parameter (6030) ▪ **Reference temperature** parameter (1816) ▪ **Temperature** parameter	Unit choose list	Country-specific: ▪ ℃ ▪ ℉
Pressure unit	Select process pressure unit. *Effect* The unit is taken from: ▪ **Pressure value** parameter (→ 🗎 53) ▪ **External pressure** parameter (→ 🗎 53) ▪ Pressure value	Unit choose list	Country-specific: ▪ bar a ▪ psi a

10.4.3 Selecting and setting the medium

The **Select medium** wizard submenu contains parameters that must be configured in order to select and set the medium.

Navigation
"Setup" menu → Medium selection

▶ Medium selection	
Select medium	→ 52
Select gas type	→ 52
Reference sound velocity	→ 53
Temperature coefficient sound velocity	→ 53
Pressure compensation	→ 53
Pressure value	→ 53
External pressure	→ 53

Parameter overview with brief description

Parameter	Prerequisite	Description	Selection / User entry
Select medium	–	Use this function to select the type of medium: "Gas" or "Liquid". Select the "Other" option in exceptional cases in order to enter the properties of the medium manually (e.g. for highly compressive liquids such as sulfuric acid).	▪ Liquid ▪ Gas
Select gas type	In the **Medium selection** submenu, the **Gas** option is selected.	Select measured gas type.	▪ Air ▪ Ammonia NH3 ▪ Argon Ar ▪ Sulfur hexafluoride SF6 ▪ Oxygen O2 ▪ Ozone O3 ▪ Nitrogen oxide NOx ▪ Nitrogen N2 ▪ Nitrous oxide N2O ▪ Methane CH4 ▪ Hydrogen H2 ▪ Helium He ▪ Hydrogen chloride HCl ▪ Hydrogen sulfide H2S ▪ Ethylene C2H4 ▪ Carbon dioxide CO2 ▪ Carbon monoxide CO ▪ Chlorine Cl2 ▪ Butane C4H10 ▪ Propane C3H8 ▪ Propylene C3H6 ▪ Ethane C2H6 ▪ Others

Parameter	Prerequisite	Description	Selection / User entry
Reference sound velocity	In the **Select gas type** parameter, the **Others** option is selected.	Enter sound velocity of gas at 0 °C (32 °F).	1 to 99 999.9999 m/s
Temperature coefficient sound velocity	In the **Select gas type** parameter, the **Others** option is selected.	Enter temperature coefficient for the gas sound velocity.	Positive floating-point number
Pressure compensation	–	Select pressure compensation type.	▪ Off ▪ Fixed value ▪ External value
Pressure value	In the **Pressure compensation** parameter, the **Fixed value** option or the **Current input 1…n** option is selected.	Enter process pressure to be used for pressure correction.	Positive floating-point number
External pressure	In the **Pressure compensation** parameter, the **External value** option is selected.		

10.4.4 Configuring the communication interface

The **Communication** submenu guides you systematically through all the parameters that have to be configured for selecting and setting the communication interface.

Navigation

"Setup" menu → Communication

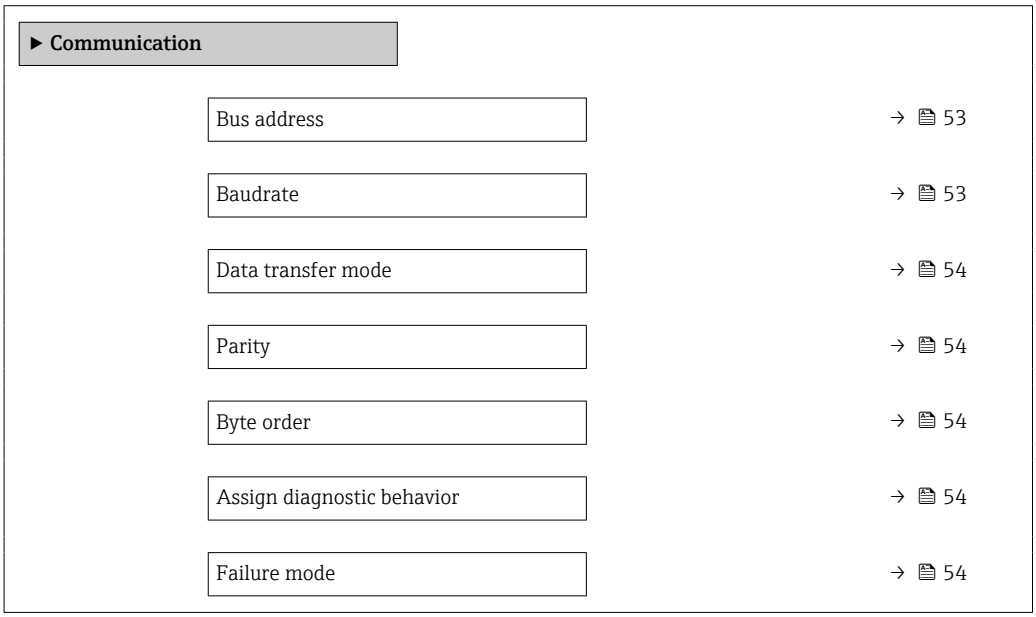

Parameter overview with brief description

Parameter	Description	User entry / Selection
Bus address	Enter device address.	1 to 247
Baudrate	Define data transfer speed.	▪ 1200 BAUD ▪ 2400 BAUD ▪ 4800 BAUD ▪ 9600 BAUD ▪ 19200 BAUD ▪ 38400 BAUD ▪ 57600 BAUD ▪ 115200 BAUD

Parameter	Description	User entry / Selection
Data transfer mode	Select data transfer mode.	▪ ASCII ▪ RTU
Parity	Select parity bits.	Picklist **ASCII** option: ▪ 0 = **Even** option ▪ 1 = **Odd** option Picklist **RTU** option: ▪ 0 = **Even** option ▪ 1 = **Odd** option ▪ 2 = **None / 1 stop bit** option ▪ 3 = **None / 2 stop bits** option
Byte order	Select byte transmission sequence.	▪ 0-1-2-3 ▪ 3-2-1-0 ▪ 1-0-3-2 ▪ 2-3-0-1
Assign diagnostic behavior	Select diagnostic behavior for MODBUS communication.	▪ Off ▪ Alarm or warning ▪ Warning ▪ Alarm
Failure mode	Select measured value output behavior when a diagnostic message occurs via Modbus communication. NaN [1]	▪ NaN value ▪ Last valid value

1) Not a Number

10.4.5 Configuring the low flow cut off

The **Low flow cut off** submenu contains the parameters that must be set in order to configure the low flow cut off.

Navigation
"Setup" menu → Low flow cut off

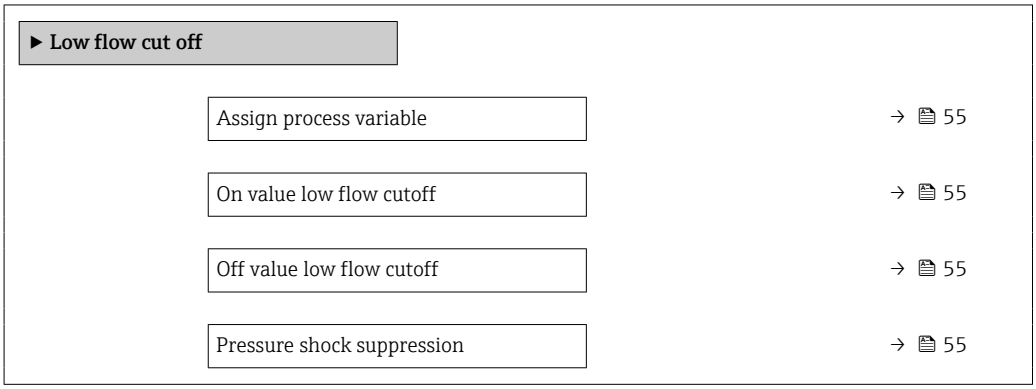

Parameter overview with brief description

Parameter	Prerequisite	Description	Selection / User entry	Factory setting
Assign process variable	–	Select process variable for low flow cut off.	▪ Off ▪ Mass flow ▪ Volume flow ▪ Corrected volume flow	–
On value low flow cutoff	A process variable is selected in the **Assign process variable** parameter (→ 55).	Enter on value for low flow cut off.	Signed floating-point number	Depends on country and nominal diameter
Off value low flow cutoff	A process variable is selected in the **Assign process variable** parameter (→ 55).	Enter off value for low flow cut off.	0 to 100.0 %	–
Pressure shock suppression	A process variable is selected in the **Assign process variable** parameter (→ 55).	Enter time frame for signal suppression (= active pressure shock suppression).	0 to 100 s	–

10.4.6 Partially filled pipe detection

The **Partially filled pipe detection** submenu contains parameters that have to be set for configuring empty pipe detection.

Navigation
"Setup" menu → Partially filled pipe detection

▶ **Partially filled pipe detection**	
Assign process variable	→ 🗎 56
Low value partial filled pipe detection	→ 🗎 56
High value partial filled pipe detection	→ 🗎 56
Response time part. filled pipe detect.	→ 🗎 56

Parameter overview with brief description

Parameter	Prerequisite	Description	Selection / User entry	Factory setting
Assign process variable	–	Select process variable for partially filled pipe detection.	▪ Off ▪ Density ▪ Reference density	Density
Low value partial filled pipe detection	A process variable is selected in the **Assign process variable** parameter (→ 🗎 56).	Enter lower limit value for deactivating partialy filled pipe detection.	Positive floating-point number	Depends on country: ▪ 200 kg/m^3 ▪ 12.5 lb/ft^3
High value partial filled pipe detection	A process variable is selected in the **Assign process variable** parameter (→ 🗎 56).	Enter upper limit value for deactivating partialy filled pipe detection.	Signed floating-point number	Depends on country: ▪ 6000 kg/m^3 ▪ 374.6 lb/ft^3
Response time part. filled pipe detect.	A process variable is selected in the **Assign process variable** parameter (→ 🗎 56).	Use this function to enter the minimum time (hold time) the signal must be present before diagnostic message S962 "Pipe only partly filled" is triggered in the event of a partially filled or empty measuring pipe.	0 to 100 s	–

10.5 Advanced settings

The **Advanced setup** submenu with its submenus contains parameters for specific settings.

The number of submenus can vary depending on the device version, e.g. viscosity is available only with the Promass I.

Navigation
"Setup" menu → Advanced setup

▶ **Advanced setup**	
Enter access code	→ 📄 57
▶ **Calculated values**	→ 📄 57
▶ **Sensor adjustment**	→ 📄 59
▶ **Totalizer 1 to n**	→ 📄 60
▶ **Viscosity**	
▶ **Concentration**	
▶ **Heartbeat setup**	
▶ **Administration**	→ 📄 61

10.5.1 Using the parameter to enter the access code

Navigation
"Setup" menu → Advanced setup

Parameter overview with brief description

Parameter	Description	User entry
Enter access code	Enter access code to disable write protection of parameters.	Max. 16-digit character string comprising numbers, letters and special characters

10.5.2 Calculated process variables

The **Calculated values** submenu contains parameters for calculating the corrected volume flow.

Navigation
"Setup" menu → Advanced setup → Calculated values

▶ **Calculated values**	
▶ **Corrected volume flow calculation**	→ 📄 58

"Corrected volume flow calculation" submenu

Navigation
"Setup" menu → Advanced setup → Calculated values → Corrected volume flow calculation

▶ Corrected volume flow calculation	
Corrected volume flow calculation (1812)	→ 📄 58
External reference density (6198)	→ 📄 58
Fixed reference density (1814)	→ 📄 58
Reference temperature (1816)	→ 📄 58
Linear expansion coefficient (1817)	→ 📄 59
Square expansion coefficient (1818)	→ 📄 59

Parameter overview with brief description

Parameter	Prerequisite	Description	Selection / User interface / User entry	Factory setting
Corrected volume flow calculation	–	Select reference density for calculating the corrected volume flow.	▪ Fixed reference density ▪ Calculated reference density ▪ Reference density by API table 53 ▪ External reference density	–
External reference density	In the **Corrected volume flow calculation** parameter, the **External reference density** option is selected.	Shows external reference density.	Floating point number with sign	–
Fixed reference density	The **Fixed reference density** option is selected in the **Corrected volume flow calculation** parameter parameter.	Enter fixed value for reference density.	Positive floating-point number	–
Reference temperature	The **Calculated reference density** option is selected in the **Corrected volume flow calculation** parameter parameter.	Enter reference temperature for calculating the reference density.	−273.15 to 99 999 °C	Country-specific: ▪ +20 °C ▪ +68 °F

Parameter	Prerequisite	Description	Selection / User interface / User entry	Factory setting
Linear expansion coefficient	The **Calculated reference density** option is selected in the **Corrected volume flow calculation** parameter parameter.	Enter linear, medium-specific expansion coefficient for calculating the reference density.	0 to 1	–
Square expansion coefficient	The **Calculated reference density** option is selected in the **Corrected volume flow calculation** parameter parameter.	For media with a non-linear expansion pattern: enter the quadratic, medium-specific expansion coefficient for calculating the reference density.	0 to 1	–

10.5.3 Carrying out a sensor adjustment

The **Sensor adjustment** submenu contains parameters that pertain to the functionality of the sensor.

Navigation

"Setup" menu → Advanced setup → Sensor adjustment

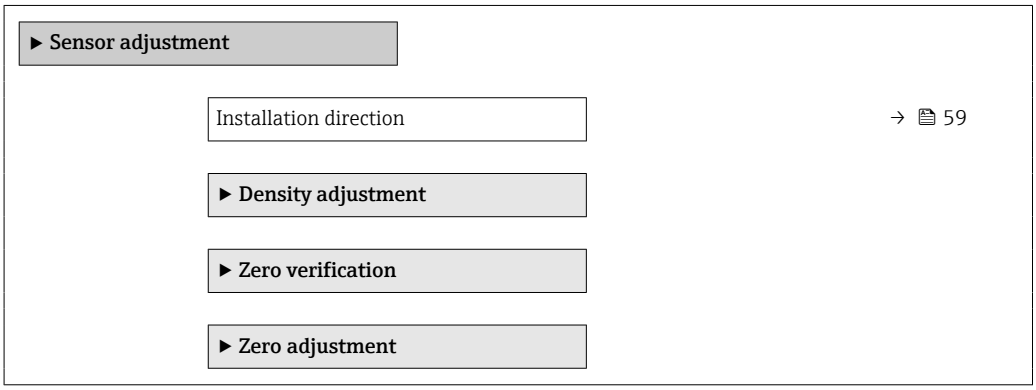

Parameter overview with brief description

Parameter	Description	Selection
Installation direction	Set sign of flow direction to match the direction of the arrow on the sensor.	▪ Flow in arrow direction ▪ Flow against arrow direction

Zero verification and zero adjustment

All measuring instruments are calibrated in accordance with state-of-the-art technology. Calibration takes place under reference conditions → 94. Therefore, a zero adjustment in the field is generally not required.

Experience shows that zero adjustment is advisable only in special cases:
- To achieve maximum measurement accuracy even with low flow rates.
- Under extreme process or operating conditions (e.g. very high process temperatures or very high-viscosity media).
- For gas applications with low pressure.

To achieve the highest possible measurement accuracy at low flow rates, the installation must protect the sensor from mechanical stress during operation.

To get a representative zero point, ensure that:
- any flow in the device is prevented during the adjustment
- the process conditions (e.g. pressure, temperature) are stable and representative

Zero verification and zero adjustment cannot be performed if the following process conditions are present:
- Gas pockets
  Ensure that the system has been sufficiently flushed with the medium. Repeat flushing can help to eliminate gas pockets
- Thermal circulation
  In the event of temperature differences (e.g. between the measuring tube inlet and outlet section), induced flow can occur even if the valves are closed due to thermal circulation in the device
- Leaks at the valves
  If the valves are not leak-tight, flow is not sufficiently prevented when determining the zero point

If these conditions cannot be avoided, it is advisable to keep the factory setting for the zero point.

Navigation
"Setup" menu → Advanced setup → Sensor adjustment → Zero point adjustment

▶ Zero point adjustment	
Zero point adjustment control	→ 📄 60
Progress	→ 📄 60

Parameter overview with brief description

Parameter	Description	Selection / User interface	Factory setting
Zero point adjustment control	Start zero point adjustment.	▪ Cancel ▪ Busy ▪ Zero point adjust failure ▪ Start	–
Progress	Shows the progress of the process.	0 to 100 %	–

10.5.4 Configuring the totalizer

In the **"Totalizer 1 to n" submenu**, you can configure the specific totalizer.

Navigation
"Setup" menu → Advanced setup → Totalizer 1 to n

▶ Totalizer 1 to n	
Assign process variable	→ 📄 61
Unit totalizer	→ 📄 61
Totalizer operation mode	→ 📄 61
Failure mode	→ 📄 61

Parameter overview with brief description

Parameter	Prerequisite	Description	Selection	Factory setting
Assign process variable	–	Select process variable for totalizer.	▪ Off ▪ Mass flow ▪ Volume flow ▪ Corrected volume flow ▪ Target mass flow * ▪ Carrier mass flow *	–
Unit totalizer	A process variable is selected in the **Assign process variable** parameter (→ 🗎 61) of the **Totalizer 1 to n** submenu.	Select process variable totalizer unit.	Unit choose list	Depends on country: ▪ kg ▪ lb
Totalizer operation mode	A process variable is selected in the **Assign process variable** parameter (→ 🗎 61) of the **Totalizer 1 to n** submenu.	Select totalizer calculation mode.	▪ Net flow total ▪ Forward flow total ▪ Reverse flow total	–
Failure mode	A process variable is selected in the **Assign process variable** parameter (→ 🗎 61) of the **Totalizer 1 to n** submenu.	Define totalizer behavior in alarm condition.	▪ Stop ▪ Actual value ▪ Last valid value	–

* Visibility depends on order options or device settings

10.5.5 Using parameters for device administration

The **Administration** submenu systematically guides the user through all the parameters that can be used for device administration purposes.

Navigation
"Setup" menu → Advanced setup → Administration

▶ **Administration**

Device reset → 🗎 61

Parameter overview with brief description

Parameter	Description	Selection
Device reset	Reset the device configuration - either entirely or in part - to a defined state.	▪ Cancel ▪ To delivery settings ▪ Restart device ▪ Delete powerfail storage ▪ Delete T-DAT ▪ Faulty device parameters ▪ DeleteFactoryData

10.6 Simulation

Via the **Simulation** submenu, it is possible to simulate various process variables in the process and the device alarm mode and verify downstream signal chains (switching valves or closed-control loops). The simulation can be performed without a real measurement (no flow of medium through the device).

Navigation
"Diagnostics" menu → Simulation

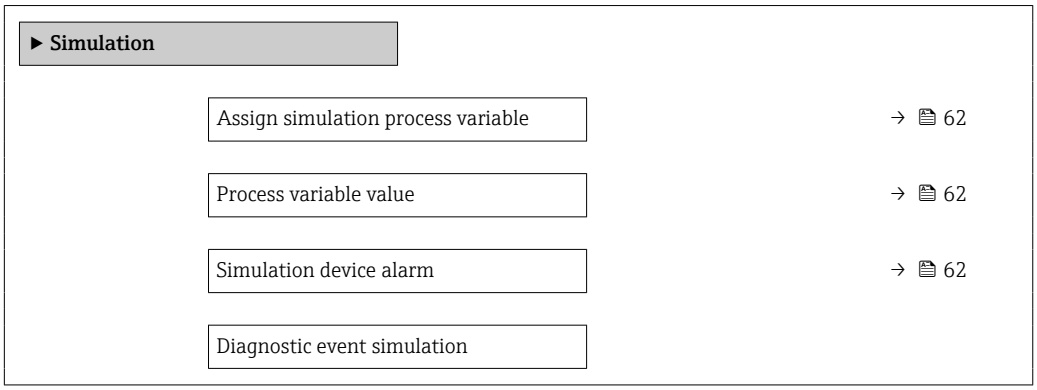

Parameter overview with brief description

Parameter	Prerequisite	Description	Selection / User entry
Assign simulation process variable	–	Select a process variable for the simulation process that is activated.	▪ Off ▪ Mass flow ▪ Volume flow ▪ Corrected volume flow ▪ Density ▪ Reference density ▪ Temperature ▪ Dynamic viscosity * ▪ Kinematic viscosity * ▪ Temp. compensated dynamic viscosity * ▪ Temp. compensated kinematic viscosity * ▪ Concentration * ▪ Target mass flow * ▪ Carrier mass flow *
Process variable value	A process variable is selected in the **Assign simulation process variable** parameter (→ 62).	Enter the simulation value for the selected process variable.	Depends on the process variable selected
Simulation device alarm	–	Switch the device alarm on and off.	▪ Off ▪ On

* Visibility depends on order options or device settings

10.7 Protecting settings from unauthorized access

The following options exist for protecting the configuration of the measuring device from unintentional modification after commissioning:
Write protection via write protection switch → 62

10.7.1 Write protection via write protection switch

The write protection switch makes it possible to block write access to the entire operating menu with the exception of the following parameters:
- External pressure
- External temperature
- Reference density
- All parameters for configuring the totalizer

The parameter values are now read only and cannot be edited any more:
- Via service interface (CDI)
- Via Modbus RS485

1. Depending on the housing version, loosen the securing clamp or fixing screw of the housing cover.
2. Depending on the housing version, unscrew or open the housing cover.
3. 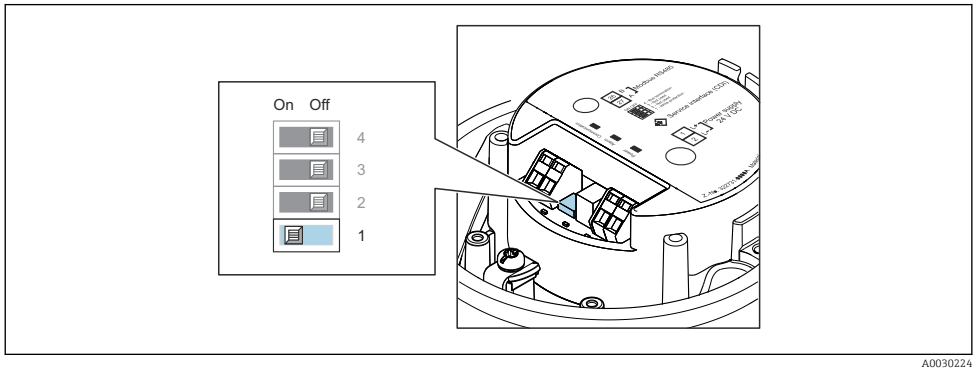

A0030224

   Setting the write protection switch on the main electronics module to the **On** position enables hardware write protection. Setting the write protection switch on the main electronics module to the **Off** position (factory setting) disables hardware write protection.

   ↳ If hardware write protection is enabled: the **Locking status** parameter displays the **Hardware locked** option ; if disabled, the **Locking status** parameter does not display any option .
4. Reverse the removal procedure to reassemble the transmitter.

11 Operation

11.1 Reading the device locking status

Device active write protection: **Locking status** parameter

Navigation
"Operation" menu → Locking status

Function scope of "Locking status" parameter

Options	Description
Hardware locked	The locking switch (DIP switch) for locking the hardware is activated on the main electronic module. This prevents write access to the parameters .
Temporarily locked	Write access to the parameters is temporarily locked on account of internal processes running in the device (e.g. data upload/download, reset etc.). Once the internal processing has been completed, the parameters can be changed once again.

11.2 Adjusting the operating language

Detailed information:
- To configure the operating language → 📄 48
- For information on the operating languages supported by the measuring device → 📄 105

11.3 Reading off measured values

With the **Measured values** submenu, it is possible to read all the measured values.

Navigation
"Diagnostics" menu → Measured values

▶ **Measured values**		
	▶ **Process variables**	→ 📄 64
	▶ **Totalizer**	→ 📄 67

11.3.1 "Measured variables" submenu

The **Process variables** submenu contains all the parameters needed to display the current measured values for each process variable.

Navigation
"Diagnostics" menu → Measured values → Measured variables

▶ **Measured variables**		
	Mass flow	→ 📄 65

Volume flow	→ 65
Corrected volume flow	→ 66
Density	→ 66
Reference density	→ 66
Temperature	→ 66
Pressure	→ 66
Dynamic viscosity	→ 66
Kinematic viscosity	→ 66
Temp. compensated dynamic viscosity	→ 66
Temp. compensated kinematic viscosity	→ 66
Concentration	→ 66
Target mass flow	→ 67
Carrier mass flow	→ 67
Target corrected volume flow	→ 67
Carrier corrected volume flow	→ 67
Target volume flow	→ 67
Carrier volume flow	→ 67

Parameter overview with brief description

Parameter	Prerequisite	Description	User interface
Measured values 1	–	Displays the mass flow that is currently measured. *Dependency* The unit is taken from: **Mass flow unit** parameter (→ 50)	Signed floating-point number
Measured values 2	–	Displays the volume flow that is currently calculated. *Dependency* The unit is taken from the **Volume flow unit** parameter (→ 50).	Signed floating-point number

Parameter	Prerequisite	Description	User interface
Measured values 4	–	Displays the corrected volume flow that is currently calculated. *Dependency* The unit is taken from: **Corrected volume flow unit** parameter (→ 📄 50)	Signed floating-point number
Measured values 3	–		Signed floating-point number
Measured values 5	–	Displays the reference density that is currently calculated. *Dependency* The unit is taken from: **Reference density unit** parameter (→ 📄 50)	Signed floating-point number
Measured values 6	–		Signed floating-point number
Pressure value	–	Displays either a fixed or external pressure value. *Dependency* The unit is taken from the **Pressure unit** parameter (→ 📄 51).	Signed floating-point number
Dynamic viscosity	For the following order code: "Application package", option EG "Viscosity" ℹ The software options currently enabled are displayed in the **Software option overview** parameter.	Displays the dynamic viscosity that is currently calculated. *Dependency* The unit is taken from: **Dynamic viscosity unit** parameter	Signed floating-point number
Kinematic viscosity	For the following order code: "Application package", option EG "Viscosity" ℹ The software options currently enabled are displayed in the **Software option overview** parameter.	Displays the kinematic viscosity that is currently calculated. *Dependency* The unit is taken from: **Kinematic viscosity unit** parameter	Signed floating-point number
Temp. compensated dynamic viscosity	For the following order code: "Application package", option EG "Viscosity" ℹ The software options currently enabled are displayed in the **Software option overview** parameter.	Displays the temperature compensation that is currently calculated for the viscosity. *Dependency* The unit is taken from: **Dynamic viscosity unit** parameter	Signed floating-point number
Temp. compensated kinematic viscosity	For the following order code: "Application package", option EG "Viscosity" ℹ The software options currently enabled are displayed in the **Software option overview** parameter.	Displays the temperature compensation that is currently calculated for the kinetic viscosity. *Dependency* The unit is taken from: **Kinematic viscosity unit** parameter (0578)	Signed floating-point number
Concentration	For the following order code: Order code for "Application package", option **ED** "Concentration" ℹ The software options currently enabled are displayed in the **Software option overview** parameter.	Displays the concentration that is currently calculated. *Dependency* The unit is taken from the **Concentration unit** parameter.	Signed floating-point number

Parameter	Prerequisite	Description	User interface
Target mass flow	With the following conditions: Order code for "Application package", option **ED** "Concentration" The software options currently enabled are displayed in the **Software option overview** parameter.	Displays the mass flow that is currently measured for the target medium. *Dependency* The unit is taken from: **Mass flow unit** parameter (→ 50)	Signed floating-point number
Carrier mass flow	With the following conditions: Order code for "Application package", option **ED** "Concentration" The software options currently enabled are displayed in the **Software option overview** parameter.	Displays the mass flow of the carrier medium that is currently measured. *Dependency* The unit is taken from: **Mass flow unit** parameter (→ 50)	Signed floating-point number
Target corrected volume flow	–		Signed floating-point number
Carrier corrected volume flow	–		Signed floating-point number
Target volume flow	–		Signed floating-point number
Carrier volume flow	–		Signed floating-point number

11.3.2 "Totalizer" submenu

The **Totalizer** submenu contains all the parameters needed to display the current measured values for every totalizer.

Navigation
"Diagnostics" menu → Measured values → Totalizer

▶ **Totalizer**	
Totalizer value 1 to n	→ 68
Totalizer overflow 1 to n	→ 68

Parameter overview with brief description

Parameter	Prerequisite	Description	User interface
Totalizer value 1 to n	One of the following options is selected in the **Assign process variable** parameter (→ 61) of the **Totalizer 1 to n** submenu: ▪ Volume flow ▪ Mass flow ▪ Corrected volume flow ▪ Target mass flow * ▪ Carrier mass flow *	Displays the current totalizer counter value.	Signed floating-point number
Totalizer overflow 1 to n	One of the following options is selected in the **Assign process variable** parameter (→ 61) of the **Totalizer 1 to n** submenu: ▪ Volume flow ▪ Mass flow ▪ Corrected volume flow ▪ Target mass flow * ▪ Carrier mass flow *	Displays the current totalizer overflow.	Integer with sign

* Visibility depends on order options or device settings

11.4 Adapting the measuring device to the process conditions

The following are available for this purpose:
- Basic settings using the**Setup** menu (→ 48)
- Advanced settings using the**Advanced setup** submenu (→ 57)

11.5 Performing a totalizer reset

The totalizers are reset in the **Operation** submenu:
- Control Totalizer
- Reset all totalizers

Navigation
"Operation" menu → Totalizer handling

▶ **Totalizer handling**	
Control Totalizer 1 to n	→ 69
Preset value 1 to n	→ 69
Reset all totalizers	→ 69

Parameter overview with brief description

Parameter	Prerequisite	Description	Selection / User entry	Factory setting
Control Totalizer 1 to n	A process variable is selected in the **Assign process variable** parameter (→ 🗎 61) of the **Totalizer 1 to n** submenu.	Control totalizer value.	▪ Totalize ▪ Reset + hold ▪ Preset + hold ▪ Reset + totalize ▪ Preset + totalize ▪ Hold	–
Preset value 1 to n	A process variable is selected in the **Assign process variable** parameter (→ 🗎 61) of the **Totalizer 1 to n** submenu.	Specify start value for totalizer. *Dependency* ℹ The unit of the selected process variable is defined for the totalizer based on the selection made in the **Assign process variable** parameter: ▪ **Volume flow** option: **Volume flow unit** parameter ▪ **Mass flow** option, **Target mass flow** option, **Carrier mass flow** option: **Mass flow unit** parameter ▪ **Corrected volume flow** option: **Corrected volume unit** parameter	Signed floating-point number	Depends on country: ▪ 0 kg ▪ 0 lb
Reset all totalizers	–	Reset all totalizers to 0 and start.	▪ Cancel ▪ Reset + totalize	–

11.5.1 Function scope of "Control Totalizer" parameter

Options	Description
Totalize	The totalizer is started or continues running.
Reset + hold	The totaling process is stopped and the totalizer is reset to 0.
Preset + hold [1]	The totaling process is stopped and the totalizer is set to its defined start value from the **Preset value** parameter.
Reset + totalize	The totalizer is reset to 0 and the totaling process is restarted.
Preset + totalize [1]	The totalizer is set to the defined start value in the **Preset value** parameter and the totaling process is restarted.

1) Visible depending on the order options or device settings

11.5.2 Function range of "Reset all totalizers" parameter

Options	Description
Cancel	No action is executed and the user exits the parameter.
Reset + totalize	Resets all totalizers to 0 and restarts the totaling process. This deletes all the previously aggregated flow values.

12 Diagnostics and troubleshooting

12.1 General troubleshooting

For output signals

Fault	Possible causes	Remedial action
Green power LED on the main electronics module of the transmitter is dark	Supply voltage does not match the voltage specified on the nameplate.	Apply the correct supply voltage → 30.
Green power LED on the main electronics module of the transmitter is dark	Power supply cable connected incorrectly	Check the terminal assignment → 26.
Green power LED on Safety Barrier Promass 100 is dark	Supply voltage does not match the voltage specified on the nameplate.	Apply the correct supply voltage → 30.
Green power LED on Safety Barrier Promass 100 is dark	Power supply cable connected incorrectly	Check the terminal assignment → 26.
Device is measuring incorrectly.	Configuration error or device is operated outside the application.	1. Check and correct parameter configuration. 2. Observe limit values specified in the "Technical Data".

For access

Fault	Possible causes	Remedial action
Write access to parameters is not possible.	Hardware write protection is enabled.	Set the write protection switch on the main electronics module to the **OFF** position → 62.
Connection via Modbus RS485 is not possible.	Modbus RS485 bus cable is connected incorrectly.	Check the terminal assignment → 26.
Connection via Modbus RS485 is not possible.	Device plug is connected incorrectly.	Check the pin assignment of the device plugs → 28.
Connection via Modbus RS485 is not possible.	Modbus RS485 cable is incorrectly terminated.	Check the terminating resistor → 33.
Connection via Modbus RS485 is not possible.	Settings for the communication interface are incorrect.	Check the Modbus RS485 configuration → 53.
Connection via the service interface is not possible.	▪ The USB port on the PC is incorrectly configured. ▪ The driver is not installed correctly.	Observe the documentation for the Commubox FXA291: Technical Information TI00405C
Connection to the web server is not possible.	The IP address on the PC is incorrectly configured.	Check the IP address: 192.168.1.212
Operation with FieldCare or DeviceCare via service interface CDI-RJ45 (port 8000) is not possible.	Firewall of the PC or network is blocking communication.	Depending on the settings of the firewall used on the PC or in the network, the firewall must be adapted or disabled to allow FieldCare/ DeviceCare access.
Flashing the firmware with FieldCare or DeviceCare via service interface CDI-RJ45 (port 8000 or TFTP ports) is not possible.	Firewall of the PC or network is blocking communication.	Depending on the settings of the firewall used on the PC or in the network, the firewall must be adapted or disabled to allow FieldCare/ DeviceCare access.

12.2 Diagnostic information via LEDs

12.2.1 Transmitter

Various LEDs in the transmitter provide information on the device status.

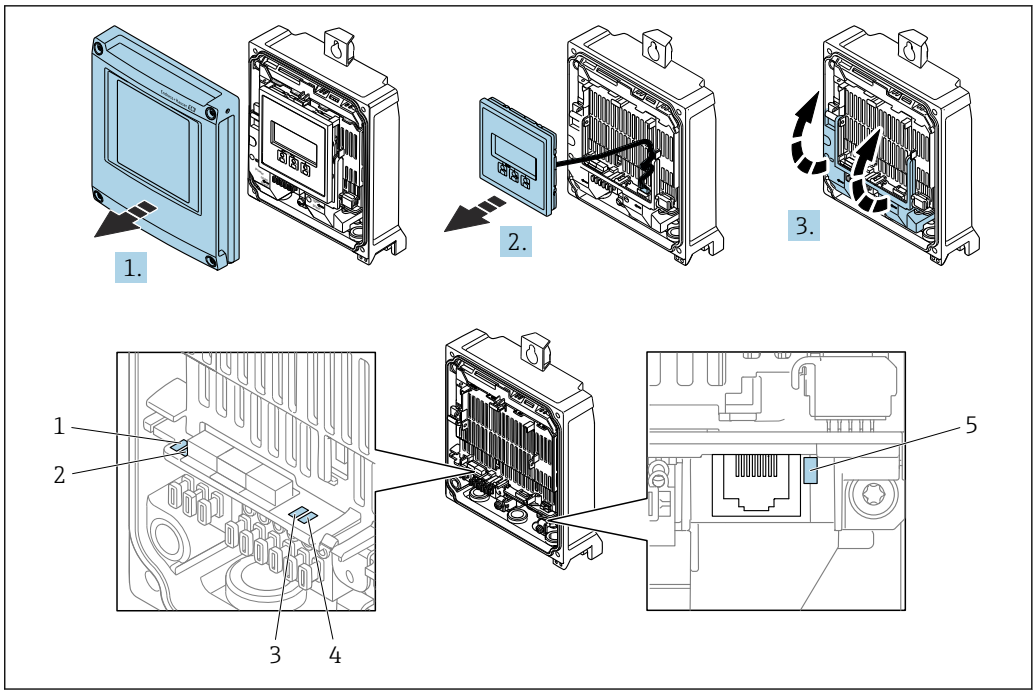

1 *Supply voltage*
2 *Device status*
3 *Not used*
4 *Communication*
5 *Service interface (CDI) active*

1. Open the housing cover.
2. Remove the display module.
3. Fold open the terminal cover.

LED	Color	Meaning
Supply voltage	OFF	Supply voltage is off or too low
	Green	Supply voltage is ok
Alarm	OFF	Device status is ok
	Flashing red	A device error of diagnostic behavior "Warning" has occurred
	Red	▪ A device error of diagnostic behavior "Alarm" has occurred ▪ Boot loader is active
Device status	Green	Device status is ok
	Flashing red	A device error of diagnostic behavior "Warning" has occurred
	Red	A device error of diagnostic behavior "Alarm" has occurred
	Alternately flashing red/green	Boot loader is active
Communication	Flashing white	Modbus RS485 communication is active

12.2.2 Promass 100 safety barrier

Various LEDs on the Promass 100 safety barrier provide information on its status.

LED	Color	Color
Power	OFF	Supply voltage is off or too low.
	Green	Supply voltage is OK.
Communication	Flashing white	Modbus RS485 communication is active.

12.3 Diagnostic information in FieldCare or DeviceCare

12.3.1 Diagnostic options

Any faults detected by the measuring device are displayed on the home page of the operating tool once the connection has been established.

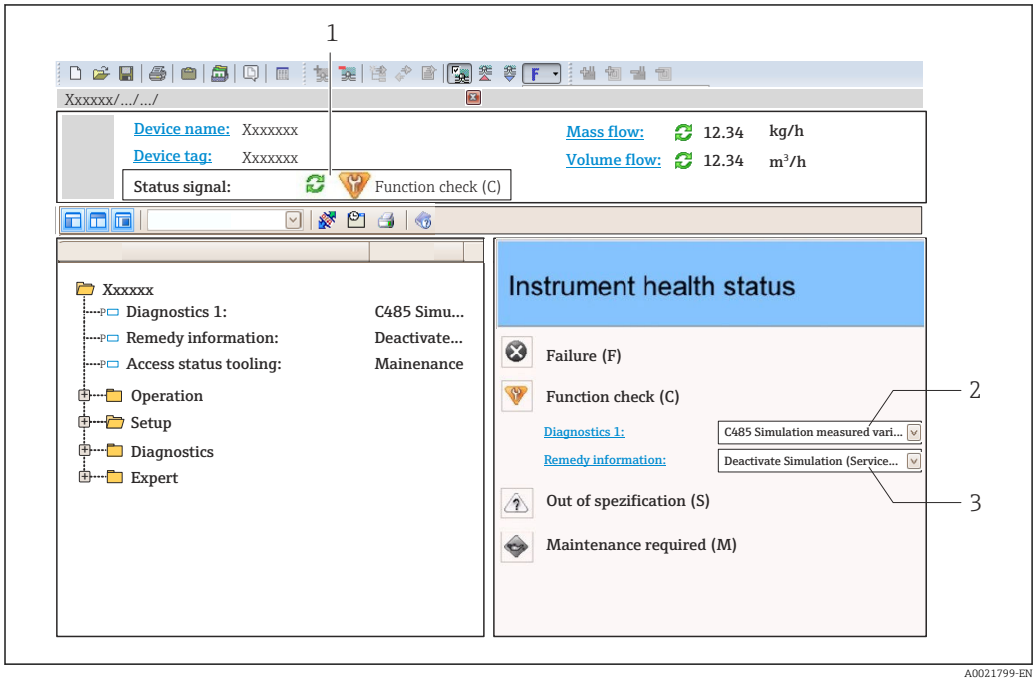

1 *Status area with status signal*
2 *Diagnostic information* → 📄 *73*
3 *Remedial actions with service ID*

In addition, diagnostic events which have occurred can be shown in the **Diagnostics** menu:
- Via parameter → 📄 76
- Via submenu → 📄 77

Status signals

The status signals provide information on the state and reliability of the device by categorizing the cause of the diagnostic information (diagnostic event).

Symbol	Meaning
⊗	**Failure** A device error has occurred. The measured value is no longer valid.
	Function check The device is in service mode (e.g. during a simulation).
	Out of specification The device is being operated: Outside its technical specification limits (e.g. outside the process temperature range)
	Maintenance required Maintenance is required. The measured value remains valid.

The status signals are categorized in accordance with VDI/VDE 2650 and NAMUR Recommendation NE 107.

Diagnostic information

The fault can be identified using the diagnostic information. The short text helps you by providing information about the fault.

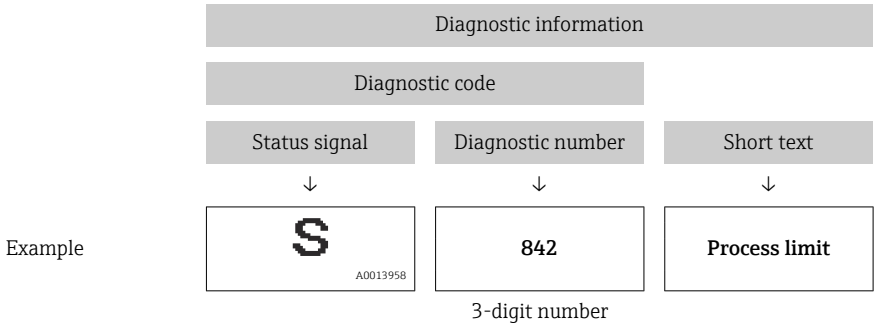

12.3.2 Calling up remedy information

Remedy information is provided for every diagnostic event to ensure that problems can be rectified quickly:

- On the home page
  Remedy information is displayed in a separate field below the diagnostics information.
- In the **Diagnostics** menu
  Remedy information can be called up in the working area of the user interface.

The user is in the **Diagnostics** menu.

1. Call up the desired parameter.
2. On the right in the working area, mouse over the parameter.
   ↳ A tool tip with remedy information for the diagnostic event appears.

12.4 Diagnostic information via communication interface

12.4.1 Reading out diagnostic information

Diagnostic information can be read out via the ModbusRS485register addresses.

- Via register address **6821** (data type = string): diagnostic code, e.g. F270
- Via register address **6859** (data type = integer): diagnostic number, e.g. 270

For an overview of diagnostic events with diagnosis number and diagnosis code → 📄 74

12.4.2 Configuring error response mode

The error response mode for Modbus RS485 communication can be configured in the **Modbus configuration** submenu using 1 parameter.

Navigation path
Setup → Communication

Parameter overview with brief description

Parameter	Description	Selection	Factory setting
Failure mode	Select measured value output behavior when a diagnostic message occurs via Modbus communication. The effect of this parameter depends on the option selected in the **Assign diagnostic behavior** parameter.	▪ NaN value ▪ Last valid value NaN ≡ not a number	NaN value

12.5 Adapting the diagnostic information

12.5.1 Adapting the diagnostic behavior

Each item of diagnostic information is assigned a specific diagnostic behavior at the factory. The user can change this assignment for specific diagnostic information in the **Diagnostic behavior** submenu.

Expert → System → Diagnostic handling → Diagnostic behavior

You can assign the following options to the diagnostic number as the diagnostic behavior:

Options	Description
Alarm	The device stops measurement. The measured value output via Modbus RS485 and the totalizers assume the defined alarm condition. A diagnostic message is generated.
Warning	The device continues to measure. The measured value output via Modbus RS485 and the totalizers are not affected. A diagnostic message is generated.
Logbook entry only	The device continues to measure. The diagnostic message is entered only in the **Event logbook** submenu.
Off	The diagnostic event is ignored, and no diagnostic message is generated or entered.

12.6 Overview of diagnostic information

The amount of diagnostic information and the number of measured variables affected increase if the measuring device has one or more application packages.

In the case of some items of diagnostic information, the diagnostic behavior can be changed. Adapting the diagnostic information → 📖 74

Diagnostic number	Short text	Remedy instructions	Status signal [from the factory]	Diagnostic behavior [from the factory]
Diagnostic of sensor				
022	Sensor temperature	1. Change main electronic module 2. Change sensor	F	Alarm
046	Sensor limit exceeded	1. Inspect sensor 2. Check process condition	S	Alarm [1)]
062	Sensor connection	1. Change main electronic module 2. Change sensor	F	Alarm
082	Data storage	1. Check module connections 2. Contact service	F	Alarm

Diagnostic number	Short text	Remedy instructions	Status signal [from the factory]	Diagnostic behavior [from the factory]
083	Memory content	1. Restart device 2. Contact service	F	Alarm
140	Sensor signal	1. Check or change main electronics 2. Change sensor	S	Alarm [1)]
144	Measuring error too high	1. Check or change sensor 2. Check process conditions	F	Alarm [1)]
Diagnostic of electronic				
201	Device failure	1. Restart device 2. Contact service	F	Alarm
242	Software incompatible	1. Check software 2. Flash or change main electronics module	F	Alarm
252	Modules incompatible	1. Check electronic modules 2. Change electronic modules	F	Alarm
270	Main electronic failure	Change main electronic module	F	Alarm
271	Main electronic failure	1. Restart device 2. Change main electronic module	F	Alarm
272	Main electronic failure	1. Restart device 2. Contact service	F	Alarm
273	Main electronic failure	Change electronic	F	Alarm
274	Main electronic failure	Change electronic	S	Warning [1)]
302	Device verification active	Device verification active, please wait.	C	Warning
311	Electronic failure	1. Reset device 2. Contact service	F	Alarm
311	Electronic failure	1. Do not reset device 2. Contact service	M	Warning
383	Memory content	1. Restart device 2. Check or change DAT module 3. Contact service	F	Alarm
Diagnostic of configuration				
410	Data transfer	1. Check connection 2. Retry data transfer	F	Alarm
411	Up-/download active	Up-/download active, please wait	C	Warning
412	Processing Download	Download active, please wait	C	Warning
437	Configuration incompatible	1. Restart device 2. Contact service	F	Alarm
438	Dataset	1. Check data set file 2. Check device configuration 3. Up- and download new configuration	M	Warning
453	Flow override	Deactivate flow override	C	Warning
484	Simulation Failure Mode	Deactivate simulation	C	Alarm
485	Simulation measured variable	Deactivate simulation	C	Warning
495	Diagnostic event simulation	Deactivate simulation	C	Warning

Diagnostic number	Short text	Remedy instructions	Status signal [from the factory]	Diagnostic behavior [from the factory]
Diagnostic of process				
830	Sensor temperature too high	Reduce ambient temp. around the sensor housing	S	Warning
831	Sensor temperature too low	Increase ambient temp. around the sensor housing	S	Warning
832	Electronic temperature too high	Reduce ambient temperature	S	Warning [1)]
833	Electronic temperature too low	Increase ambient temperature	S	Warning [1)]
834	Process temperature too high	Reduce process temperature	S	Warning [1)]
835	Process temperature too low	Increase process temperature	S	Warning [1)]
842	Process limit	Low flow cut off active! 1. Check low flow cut off configuration	S	Warning
843	Process limit	Check process conditions	S	Warning
862	Partly filled pipe	1. Check for gas in process 2. Adjust detection limits	S	Warning
882	Input signal	1. Check input configuration 2. Check external device or process conditions	F	Alarm
910	Tubes not oscillating	1. Check electronic 2. Inspect sensor	F	Alarm
912	Medium inhomogeneous	1. Check process cond. 2. Increase system pressure	S	Warning [1)]
912	Inhomogeneous		S	Warning [1)]
913	Medium unsuitable	1. Check process conditions 2. Check electronic modules or sensor	S	Alarm [1)]
944	Monitoring failed	Check process conditions for Heartbeat Monitoring	S	Warning [1)]
948	Tube damping too high	Check process conditions	S	Warning

1) Diagnostic behavior can be changed.

12.7 Pending diagnostic events

The **Diagnostics** menu allows the user to view the current diagnostic event and the previous diagnostic event separately.

Accessing the remedial action for a diagnostic event:
- Via "FieldCare" operating tool → 📄 72
- Via "DeviceCare" operating tool → 📄 72

Other pending diagnostic events can be displayed in the **Diagnostic list** submenu → 📄 77.

Navigation
"Diagnostics" menu

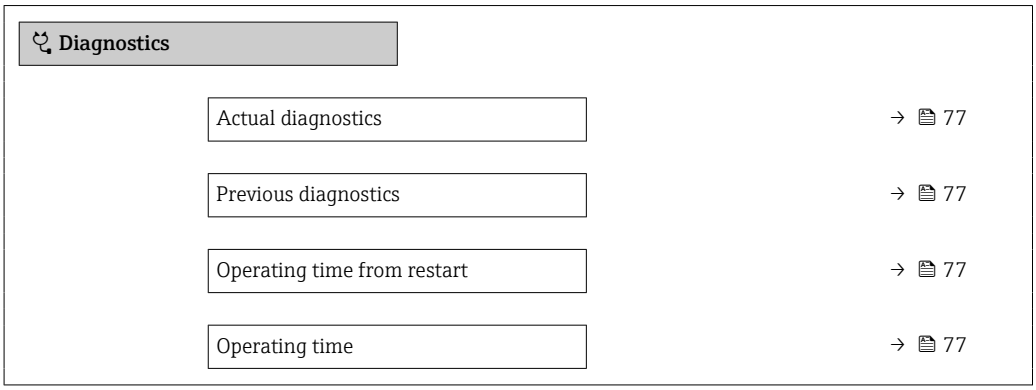

Parameter overview with brief description

Parameter	Prerequisite	Description	User interface
Actual diagnostics	A diagnostic event has occurred.	Shows the current occured diagnostic event along with its diagnostic information. If two or more messages occur simultaneously, the message with the highest priority is shown on the display.	Symbol for diagnostic behavior, diagnostic code and short message.
Previous diagnostics	Two diagnostic events have already occurred.	Shows the diagnostic event that occurred prior to the current diagnostic event along with its diagnostic information.	Symbol for diagnostic behavior, diagnostic code and short message.
Operating time from restart	–	Shows the time the device has been in operation since the last device restart.	Days (d), hours (h), minutes (m) and seconds (s)
Operating time	–	Indicates how long the device has been in operation.	Days (d), hours (h), minutes (m) and seconds (s)

12.8 Diagnostic list

Up to 5 currently pending diagnostic events are displayed in the **Diagnostic list** submenu along with the associated diagnostic information. If more than 5 diagnostic events are pending, the events with the highest priority are shown on the display.

Navigation path
Diagnostics → Diagnostic list

Accessing the remedial action for a diagnostic event:
- Via "FieldCare" operating tool → 72
- Via "DeviceCare" operating tool → 72

12.9 Event logbook

12.9.1 Reading out the event logbook

A chronological overview of the event messages that have occurred is provided in the event logbook which contains a maximum of 20 message entries. This list can be displayed via FieldCare if necessary.

Navigation path
Edit tool bar: **F** → Additional functions → Event logbook

The edit tool bar can be accessed via the FieldCare user interface → 41

This event history includes entries for:
- Diagnostic events → 74
- Information events → 78

In addition to the operating time of its occurrence and possible remedial action, each event is also assigned a symbol that indicates whether the event has occurred or has ended:
- Diagnostic event
  - ⊖: Occurrence of the event
  - ⊖: End of the event
- Information event
  ⊖: Occurrence of the event

Accessing the remedial action for a diagnostic event:
- Via "FieldCare" operating tool → 72
- Via "DeviceCare" operating tool → 72

Filtering the displayed event messages → 78

12.9.2 Filtering the event logbook

Using the **Filter options** parameter you can define which category of event message is displayed in the **Events list** submenu.

Navigation path
Diagnostics → Event logbook → Filter options

Filter categories
- All
- Failure (F)
- Function check (C)
- Out of specification (S)
- Maintenance required (M)
- Information (I)

12.9.3 Overview of information events

Unlike a diagnostic event, an information event is displayed in the event logbook only and not in the diagnostic list.

Info number	Info name
I1000	--------(Device ok)
I1079	Sensor changed
I1089	Power on
I1090	Configuration reset
I1091	Configuration changed
I1111	Density adjust failure
I1137	Electronic changed
I1151	History reset
I1155	Reset electronic temperature
I1157	Memory error event list
I1209	Density adjustment ok
I1221	Zero point adjust failure

Info number	Info name
I1222	Zero point adjustment ok
I1256	Display: access status changed
I1335	Firmware changed
I1397	Fieldbus: access status changed
I1398	CDI: access status changed
I1444	Device verification passed
I1445	Device verification failed
I1447	Record application reference data
I1448	Application reference data recorded
I1449	Recording application ref. data failed
I1450	Monitoring off
I1451	Monitoring on
I1457	Measured error verification failed
I1459	I/O module verification failed
I1460	Sensor integrity verification failed
I1461	Sensor verification failed
I1462	Sensor electronic module verific. failed
I1512	Download started
I1513	Download finished
I1514	Upload started
I1515	Upload finished
I1649	Hardware write protection activated
I1650	Hardware write protection deactivated

12.10 Resetting the device

The entire device configuration or some of the configuration can be reset to a defined state with the **Device reset** parameter (→ 61).

12.10.1 Function scope of the "Device reset" parameter

Options	Description
Cancel	No action is executed and the user exits the parameter.
To fieldbus defaults	Every parameter is reset to fieldbus default values.
To delivery settings	Every parameter for which a customer-specific default setting was ordered is reset to the customer-specific value. All other parameters are reset to the factory setting. This option is not visible if no customer-specific settings have been ordered.
Restart device	The restart resets every parameter with data stored in volatile memory (RAM) to the factory setting (e.g. measured value data). The device configuration remains unchanged.

12.11 Device information

The **Device information** submenu contains all parameters that display different information for device identification.

Navigation
"Diagnostics" menu → Device information

▶ Device information	
Device tag	→ 80
Serial number	→ 80
Firmware version	→ 80
Device name	→ 80
Order code	→ 80
Extended order code 1	→ 80
Extended order code 2	→ 81
Extended order code 3	→ 81
ENP version	→ 81

Parameter overview with brief description

Parameter	Description	User interface	Factory setting
Device tag	Shows name of measuring point.	Max. 32 characters, such as letters, numbers or special characters (e.g. @, %, /).	–
Serial number	Shows the serial number of the measuring device.	Max. 11-digit character string comprising letters and numbers.	–
Firmware version	Shows the device firmware version installed.	Character string in the format xx.yy.zz	–
Device name	Shows the name of the transmitter. The name can be found on the nameplate of the transmitter.	Max. 32 characters such as letters or numbers.	–
Order code	Shows the device order code. The order code can be found on the nameplate of the sensor and transmitter in the "Order code" field.	Character string composed of letters, numbers and certain punctuation marks (e.g. /).	–
Extended order code 1	Shows the 1st part of the extended order code. The extended order code can also be found on the nameplate of the sensor and transmitter in the "Ext. ord. cd." field.	Character string	–

Parameter	Description	User interface	Factory setting
Extended order code 2	Shows the 2nd part of the extended order code. The extended order code can also be found on the nameplate of the sensor and transmitter in the "Ext. ord. cd." field.	Character string	–
Extended order code 3	Shows the 3rd part of the extended order code. The extended order code can also be found on the nameplate of the sensor and transmitter in the "Ext. ord. cd." field.	Character string	–
ENP version	Shows the version of the electronic nameplate (ENP).	Character string	–

12.12 Firmware history

Release date	Firmware version	Order code for "Firmware version"	Firmware Changes	Documentation type	Documentation
06.2012	01.01.00	Option **78**	Original firmware	Operating instructions	BA01058D/06/EN/01.12
04.2013	01.02.zz	Option **74**	Update	Operating instructions	BA01058D/06/EN/02.13
10.2014	01.03.zz	Option **72**	▪ New unit "Beer Barrel (BBL)" ▪ Use of an external pressure value for "liquid" medium type ▪ New parameter and diagnostic information for "oscillation damping" upper limit value	Operating instructions	BA01058D/06/EN/04.14

It is possible to flash the firmware to the current version or an existing previous version via the service interface.

For the compatibility of the firmware version with the previous version, the installed device description files and operating tools, observe the information about the device in the "Manufacturer's information" document.

The manufacturer's information is available:
- In the Download Area of the Endress+Hauser Web site: www.endress.com → Downloads
- Specify the following details:
  - Product root, e.g. 8E1B
    The product root is the first part of the order code: see the nameplate on the device.
  - Text search: Manufacturer's information
  - Media type: Documentation – Technical Documentation

13 Maintenance

13.1 Maintenance work

No special maintenance work is required.

13.1.1 Cleaning

Cleaning of surfaces not in contact with the medium

1. Recommendation: Use a lint-free cloth that is either dry or slightly dampened using water.
2. Do not use sharp objects or aggressive cleaning agents that could damage surfaces (e.g. displays, housing) and seals.
3. Do not use high-pressure steam.
4. Ensure compliance with the protection class of the device.

NOTICE

Cleaning agents can damage the surfaces!

Incorrect cleaning agents can damage the surfaces!

- Do not use cleaning agents containing concentrated mineral acids, alkalis or organic solvents e.g. benzyl alcohol, methylene chloride, xylene, concentrated glycerol cleaners or acetone.

Cleaning of surfaces in contact with the medium

Note the following for cleaning and sterilization in place (CIP/SIP):

- Use only cleaning agents to which the materials in contact with the medium are sufficiently resistant.
- Observe the permitted maximum medium temperature.

13.2 Measuring and test equipment

Endress+Hauser offers a variety of measuring and testing equipment, such as Netilion or device tests.

Your Endress+Hauser Sales Center can provide detailed information on the services.

List of some of the measuring and testing equipment: → 86

13.3 Maintenance services

Endress+Hauser offers a wide variety of services for maintenance such as recalibration, maintenance service or device tests.

Your Endress+Hauser Sales Center can provide detailed information on the services.

14 Repair

14.1 General notes

14.1.1 Repair and conversion concept

The Endress+Hauser repair and conversion concept provides for the following:
- The measuring devices have a modular design.
- Spare parts are grouped into logical kits with the associated Installation Instructions.
- Repairs are carried out by Endress+Hauser Service or by appropriately trained customers.
- Certified devices can only be converted to other certified devices by Endress+Hauser Service or at the factory.

14.1.2 Notes for repair and conversion

For repair and conversion of a measuring device, observe the following notes:
- ▶ Use only original Endress+Hauser spare parts.
- ▶ Carry out the repair according to the Installation Instructions.
- ▶ Observe the applicable standards, federal/national regulations, Ex documentation (XA) and certificates.
- ▶ Document all repairs and conversions and enter the details in Netilion Analytics.

14.2 Spare parts

Device Viewer (www.endress.com/deviceviewer):
All the spare parts for the measuring device, along with the order code, are listed here and can be ordered. If available, users can also download the associated Installation Instructions.

Measuring device serial number:
- Is located on the nameplate of the device.
- Can be read out via the **Serial number** parameter (→ 80) in the **Device information** submenu.

14.3 Repair services

Endress+Hauser offers a wide range of services.

Your Endress+Hauser Sales Center can provide detailed information on the services.

14.4 Return

The requirements for safe device return can vary depending on the device type and national legislation.

1. Refer to the web page for information: https://www.endress.com
2. If returning the device, pack the device in such a way that it is reliably protected against impact and external influences. The original packaging provides the best protection.

14.5 Disposal

If required by the Directive 2012/19/EU on waste electrical and electronic equipment (WEEE), the product is marked with the depicted symbol in order to minimize the disposal of WEEE as unsorted municipal waste. Do not dispose of products bearing this marking as unsorted municipal waste. Instead, return them to the manufacturer for disposal under the applicable conditions.

14.5.1 Removing the measuring instrument

1. Switch off the device.

WARNING

Danger to persons from process conditions!

- Beware of hazardous process conditions such as pressure in the measuring instrument, high temperatures or aggressive media.

2. Carry out the installation and connection steps from the "Installing the device" and "Connecting the device" sections in reverse order. Observe the safety instructions.

14.5.2 Disposing of the measuring instrument

WARNING

Danger to personnel and environment from fluids that are hazardous to health.

- Ensure that the measuring device and all cavities are free of fluid residues that are hazardous to health or the environment, e.g. substances that have permeated into crevices or diffused through plastic.

Observe the following notes during disposal:

- Observe valid federal/national regulations.
- Ensure proper separation and reuse of the device components.

15 Accessories

Various accessories, which can be ordered with the device or subsequently from Endress+Hauser, are available for the device. Detailed information on the order code in question is available from your local Endress+Hauser sales center or on the product page of the Endress+Hauser website: www.endress.com.

15.1 Device-specific accessories

15.1.1 For the sensor

Accessories	Description
Heating jacket	Is used to stabilize the temperature of the fluids in the sensor. Water, water vapor and other non-corrosive liquids are permitted for use as fluids. If using oil as a heating medium, please consult with Endress+Hauser. ▪ If ordered together with the measuring device: Order code for "Accessory enclosed" ▪ Option RB "Heating jacket, G 1/2" female thread" ▪ Option RC "Heating jacket, G 3/4" female thread" ▪ Option RD "Heating jacket, NPT 1/2" female thread" ▪ Option RE "Heating jacket, NPT 3/4" female thread" ▪ If ordered subsequently: Use the order code with the product root DK8003. Special Documentation SD02158D

15.2 Communication-specific accessories

Accessories	Description
Commubox FXA291	Connects Endress+Hauser field devices with a CDI interface (= Endress+Hauser Common Data Interface) and the USB port of a computer or laptop. Technical Information TI00405C
Fieldgate FXA42	Transmission of the measured values of connected 4 to 20 mA analog measuring instruments, as well as digital measuring instruments ▪ Technical Information TI01297S ▪ Operating Instructions BA01778S ▪ Product page: www.endress.com/fxa42
Field Xpert SMT50	The Field Xpert SMT50 tablet PC for device configuration enables mobile plant asset management in non-hazardous areas. It is suitable for commissioning and maintenance staff to manage field instruments with a digital communication interface and to record progress. This tablet PC is designed as an all-in-one solution with a preinstalled driver library and is an easy-to-use, touch-sensitive tool which can be used to manage field instruments throughout their entire life cycle. ▪ Technical Information TI01555S ▪ Operating Instructions BA02053S ▪ Product page: www.endress.com/smt50

Field Xpert SMT70	The Field Xpert SMT70 tablet PC for device configuration enables mobile plant asset management in hazardous and non-hazardous areas. It is suitable for commissioning and maintenance staff to manage field instruments with a digital communication interface and to record progress. This tablet PC is designed as an all-in-one solution with a preinstalled driver library and is an easy-to-use, touch-sensitive tool which can be used to manage field instruments throughout their entire life cycle. ▪ Technical Information TI01342S ▪ Operating Instructions BA01709S ▪ Product page: www.endress.com/smt70
Field Xpert SMT77	The Field Xpert SMT77 tablet PC for device configuration enables mobile plant asset management in areas categorized as Ex Zone 1. ▪ Technical Information TI01418S ▪ Operating Instructions BA01923S ▪ Product page: www.endress.com/smt77

15.3 Service-specific accessories

Accessory	Description
Applicator	Software for selecting and sizing Endress+Hauser measuring instruments: ▪ Choice of measuring instruments for industrial requirements ▪ Calculation of all the necessary data for identifying the optimum flowmeter: e.g. nominal diameter, pressure loss, flow velocity and measurement accuracy. ▪ Graphic display of the calculation results ▪ Determining the partial order code. Administration, documentation and access to all project-related data and parameters over the entire life cycle of a project. Applicator is available: Via the Internet: https://portal.endress.com/webapp/applicator
Netilion	lIoT ecosystem: Unlock knowledge With the Netilion IIoT ecosystem, Endress+Hauser allows you to optimize your plant performance, digitize workflows, share knowledge, and enhance collaboration. Based on decades of experience in process automation, Endress+Hauser offers the process industry an lIoT ecosystem that enables you to gain useful insights from data. These insights can be used to optimize processes, leading to increased plant availability, efficiency, and reliability - ultimately resulting in a more profitable plant. www.netilion.endress.com
FieldCare	FDT-based plant asset management tool from Endress+Hauser. It can configure all intelligent field units in your system and helps you manage them. By using the status information, it is also a simple but effective way of checking their status and condition. Operating Instructions BA00027S and BA00059S
DeviceCare	Tool to connect and configure Endress+Hauser field devices. ▪ Technical Information: TI01134S ▪ Innovation brochure: IN01047S

15.4 System components

Accessories	Description
Memograph M graphic data manager	The Memograph M graphic data manager provides information on all the relevant measured variables. Measured values are recorded correctly, limit values are monitored and measuring points analyzed. The data are stored in the 256 MB internal memory and also on a SD card or USB stick. ▪ Technical Information TI00133R ▪ Operating Instructions BA00247R
iTEMP	The temperature transmitters can be used in all applications and are suitable for the measurement of gases, steam and liquids. They can be used to read in the medium temperature. "Fields of Activity" document FA00006T

16 Technical data

16.1 Application

The measuring device is intended only for the flow measurement of liquids and gases.

Depending on the version ordered, the measuring device can also measure potentially explosive, flammable, poisonous and oxidizing media.

To ensure that the device remains in proper operating condition for its service life, use the measuring device only for media against which the process-wetted materials are sufficiently resistant.

16.2 Function and system design

Measuring principle	Mass flow measurement based on the Coriolis measuring principle
Measuring system	The device consists of a transmitter and a sensor. The Safety Barrier Promass 100 is part of the scope of supply and must be implemented to operate the device. The device is available as a compact version: The transmitter and sensor form a mechanical unit. For information on the structure of the measuring instrument → 📄 11

16.3 Input

Measured variable

Direct measured variables

- Mass flow
- Density
- Temperature
- Viscosity

Calculated measured variables

- Volume flow
- Corrected volume flow
- Reference density

Measuring range

Measuring range for liquids

DN		Measuring range full scale values $\dot{m}_{min(F)}$ to $\dot{m}_{max(F)}$	
[mm]	[in]	[kg/h]	[lb/min]
8	⅜	0 to 2 000	0 to 73.50
15	½	0 to 6 500	0 to 238.9
15 FB	½ FB	0 to 18 000	0 to 661.5
25	1	0 to 18 000	0 to 661.5
25 FB	1 FB	0 to 45 000	0 to 1 654
40	1½	0 to 45 000	0 to 1 654
40 FB	1½ FB	0 to 70 000	0 to 2 573
50	2	0 to 70 000	0 to 2 573
50 FB	2 FB	0 to 180 000	0 to 6 615
80	3	0 to 180 000	0 to 6 615
FB = Full bore			

Measuring range for gases

The full scale value depends on the density and the speed of sound of the gas used. The full scale value can be calculated with the following formulas:

- $\dot{m}_{max(G)}$ = minimum ($\dot{m}_{max(F)} \cdot \rho_G : x$)
- $\dot{m}_{max(G)}$ = minimum ($\rho_G \cdot (c_G/2) \cdot d_i^2 \cdot (\pi/4) \cdot 3600 \cdot n$)

$\dot{m}_{max(G)}$	Maximum full scale value for gas [kg/h]
$\dot{m}_{max(F)}$	Maximum full scale value for liquid [kg/h]
$\dot{m}_{max(G)} < \dot{m}_{max(F)}$	$\dot{m}_{max(G)}$ can never be greater than $\dot{m}_{max(F)}$
ρ_G	Gas density in [kg/m³] at operating conditions
x	Limitation constant for max. gas flow [kg/m³]
c_G	Speed of sound (gas) [m/s]
d_i	Measuring tube internal diameter [m]
π	Pi
n = 1	Number of measuring tubes

DN		x
[mm]	[in]	[kg/m³]
8	⅜	60
15	½	80
15 FB	½ FB	90
25	1	90
25 FB	1 FB	90
40	1½	90
40 FB	1½ FB	90
50	2	90
50 FB	2 FB	110
80	3	110
FB = Full bore		

If calculating the full scale value using the two formulas:

1. Calculate the full scale value with both formulas.
2. The smaller value is the value that must be used.

Recommended measuring range

Flow limit → 101

Operable flow range

Over 1000 : 1.

Flow rates above the preset full scale value do not override the electronics unit, with the result that the totalizer values are registered correctly.

Input signal

External measured values

To increase the measurement accuracy of certain measured variables or to calculate the corrected volume flow for gases, the automation system can continuously write different measured values to the measuring instrument:
- Operating pressure to increase measurement accuracy (Endress+Hauser recommends the use of a pressure measuring instrument for absolute pressure, e.g. Cerabar M or Cerabar S)
- Medium temperature to increase measurement accuracy (e.g. iTEMP)
- Reference density for calculating the corrected volume flow for gases

Various pressure transmitters and temperature measuring instruments can be ordered from Endress+Hauser: see "Accessories" section → 87

It is recommended to read in external measured values to calculate the following measured variables:
- Mass flow
- Corrected volume flow

Digital communication

The measured values are written by the automation system via Modbus RS485.

16.4 Output

Output signal

Modbus RS485

Physical interface	In accordance with EIA/TIA-485-A standard
Terminating resistor	▪ For device version used in non-hazardous areas or Zone 2/Div. 2: integrated and can be activated via DIP switches on the transmitter electronics module ▪ For device version used in intrinsically safe areas: integrated and can be activated via DIP switches on the Safety Barrier Promass 100

Signal on alarm

Depending on the interface, failure information is displayed as follows.

Modbus RS485

Failure mode	Choose from: ▪ NaN value instead of current value ▪ Last valid value

Interface/protocol

- Via digital communication:
  Modbus RS485
- Via service interface
  Service interface CDI-RJ45
- Plain text display
  With information on cause and remedial actions

LEDs

Status information	Status indicated by various LEDs The following information is displayed depending on the device version: ▪ Supply voltage active ▪ Data transmission active ▪ Device alarm/error has occurred Diagnostic information via LEDs

Low flow cut off

The switch points for low flow cut off are user-selectable.

Galvanic isolation

The following connections are galvanically isolated from each other:
- Outputs
- Power supply

Protocol-specific data

Protocol-specific data

Protocol	Modbus Applications Protocol Specification V1.1
Device type	Slave
Slave address range	1 to 247
Broadcast address range	0

Function codes	▪ 03: Read holding register ▪ 04: Read input register ▪ 06: Write single registers ▪ 08: Diagnostics ▪ 16: Write multiple registers ▪ 23: Read/write multiple registers
Broadcast messages	Supported by the following function codes: ▪ 06: Write single registers ▪ 16: Write multiple registers ▪ 23: Read/write multiple registers
Supported baud rate	▪ 1 200 BAUD ▪ 2 400 BAUD ▪ 4 800 BAUD ▪ 9 600 BAUD ▪ 19 200 BAUD ▪ 38 400 BAUD ▪ 57 600 BAUD ▪ 115 200 BAUD
Data transfer mode	▪ ASCII ▪ RTU
Data access	Each device parameter can be accessed via Modbus RS485. For Modbus register information, see "Description of device parameters" documentation

16.5 Power supply

Terminal assignment

- → 📄 27
- → 📄 26
-

Supply voltage

The power unit must be tested to ensure it meets safety requirements (e.g. PELV, SELV).

Transmitter

- Modbus RS485, for use in non-hazardous areas and Zone 2/Div. 2:
  DC 20 to 30 V
- Modbus RS485, for use in intrinsically safe areas:
  Power supply via Safety Barrier Promass 100

Promass 100 safety barrier

DC 20 to 30 V

Power consumption

Transmitter

Order code for "Output"	Maximum Power consumption
Option **M** Modbus RS485, for use in non-hazardous areas and Zone 2/ Div. 2	3.5 W
Option **M**: Modbus RS485, for use in intrinsically safe areas	2.45 W

Safety Barrier Promass 100

Order code for "Output"	Maximum Power consumption
Option **M**: Modbus RS485, for use in intrinsically safe areas	4.8 W

Current consumption

Transmitter

Order code for "Output"	Maximum current consumption	Maximum switch-on current
Option **M** Modbus RS485, for use in non-hazardous areas and Zone 2/Div. 2	90 mA	10 A (< 0.8 ms)
Option **M**: Modbus RS485, for use in intrinsically safe areas	145 mA	16 A (< 0.4 ms)

Safety Barrier Promass 100

Order code for "Output"	Maximum current consumption	Maximum switch-on current
Option **M**: Modbus RS485, for use in intrinsically safe areas	230 mA	10 A (< 0.8 ms)

Device fuse

Fine-wire fuse (slow-blow) T2A

Power supply failure

- Totalizers stop at the last value measured.
- Depending on the device version, the configuration is retained in the device memory or in the plug-in memory (HistoROM DAT).
- Error messages (incl. total operated hours) are stored.

Electrical connection

→ 📄 30

Potential equalization

→ 📄 32

Terminals

Transmitter
Spring terminals for wire cross-sections0.5 to 2.5 mm^2 (20 to 14 AWG)

Promass 100 safety barrier
Plug-in screw terminals for wire cross-sections0.5 to 2.5 mm^2 (20 to 14 AWG)

Cable entries

- Cable gland: M20 × 1.5 with cable Ø 6 to 12 mm (0.24 to 0.47 in)
- Thread for cable entry:
  - M20
  - G ½"
  - NPT ½"

Cable specification

→ 📄 25

16.6 Performance characteristics

Reference operating conditions

- Error limits based on ISO 11631
- Water
  - +15 to +45 °C (+59 to +113 °F)
  - 2 to 6 bar (29 to 87 psi)
- Data as indicated in the calibration protocol
- Accuracy based on accredited calibration rigs according to ISO 17025

To obtain measured errors, use the *Applicator* sizing tool → 86

Maximum measurement error

o.r. = of reading; 1 g/cm³ = 1 kg/l; T = medium temperature

Base accuracy

Design fundamentals → 97

Mass flow and volume flow (liquids)

±0.10 % o.r.

Mass flow (gases)

±0.50 % o.r.

Density (liquids)

Under reference conditions [g/cm³]	Standard density calibration [1] [g/cm³]	Wide-range Density specification [2] [3] [g/cm³]
±0.0005	±0.02	±0.004

1) Valid over the entire temperature and density range
2) Valid range for special density calibration: 0 to 2 g/cm³, +10 to +80 °C (+50 to +176 °F)
3) order code for "Application package", option EE "Special density"

Temperature

±0.5 °C ± 0.005 · T °C (±0.9 °F ± 0.003 · (T − 32) °F)

Zero point stability

DN		Zero point stability	
[mm]	[in]	[kg/h]	[lb/min]
8	⅜	0.150	0.0055
15	½	0.488	0.0179
15 FB	½ FB	1.350	0.0496
25	1	1.350	0.0496
25 FB	1 FB	3.375	0.124
40	1½	3.375	0.124
40 FB	1½ FB	5.25	0.193
50	2	5.25	0.193
50 FB	2 FB	13.5	0.496

DN		Zero point stability	
[mm]	[in]	[kg/h]	[lb/min]
80	3	13.5	0.496
FB = Full bore			

Flow values

Flow values as turndown parameters depending on nominal diameter.

SI units

DN	1:1	1:10	1:20	1:50	1:100	1:500
[mm]	[kg/h]	[kg/h]	[kg/h]	[kg/h]	[kg/h]	[kg/h]
8	2 000	200	100	40	20	4
15	6 500	650	325	130	65	13
15 FB	18 000	1 800	900	360	180	36
25	18 000	1 800	900	360	180	36
25 FB	45 000	4 500	2 250	900	450	90
40	45 000	4 500	2 250	900	450	90
40 FB	70 000	7 000	3 500	1 400	700	140
50	70 000	7 000	3 500	1 400	700	140
50 FB	180 000	18 000	9 000	3 600	1 800	360
80	180 000	18 000	9 000	3 600	1 800	360
FB = Full bore						

US units

DN	1:1	1:10	1:20	1:50	1:100	1:500
[inch]	[lb/min]	[lb/min]	[lb/min]	[lb/min]	[lb/min]	[lb/min]
⅜	73.50	7.350	3.675	1.470	0.735	0.147
½	238.9	23.89	11.95	4.778	2.389	0.478
½ FB	661.5	66.15	33.08	13.23	6.615	1.323
1	661.5	66.15	33.08	13.23	6.615	1.323
1 FB	1 654	165.4	82.70	33.08	16.54	3.308
1½	1 654	165.4	82.70	33.08	16.54	3.308
1½ FB	2 573	257.3	128.7	51.46	25.73	5.146
2	2 573	257.3	128.7	51.46	25.73	5.146
2 FB	6 615	661.5	330.8	132.3	66.15	13.23
3	6 615	661.5	330.8	132.3	66.15	13.23
FB = Full bore						

Accuracy of outputs

The output accuracy must be factored into the measurement error if analog outputs are used; but can be ignored for fieldbus outputs (e.g. Modbus RS485, EtherNet/IP).

The outputs have the following base accuracy specifications:

Repeatability

o.r. = of reading; 1 g/cm³ = 1 kg/l; T = medium temperature

Base repeatability

Design fundamentals → 97

Mass flow and volume flow (liquids)

±0.05 % o.r.

Mass flow (gases)

±0.25 % o.r.

Density (liquids)

±0.00025 g/cm³

Temperature

±0.25 °C ± 0.0025 · T °C (±0.45 °F ± 0.0015 · (T−32) °F)

Response time

The response time depends on the configuration (damping).

Influence of medium temperature

Mass flow

o.f.s. = of full scale value

If there is a difference between the temperature during zero adjustment and the process temperature, the additional measurement error of the sensors is typically ±0.0002 %o.f.s./°C (±0.0001 % o. f.s./°F).

The influence is reduced when the zero adjustment is performed at process temperature.

Density

If there is a difference between the density calibration temperature and the process temperature, the measurement error of the sensors is typically ±0.0001 g/cm³/°C (±0.00005 g/cm³/°F). Field density adjustment is possible.

Wide-range density specification (special density calibration)

If the process temperature is outside the valid range (→ 94) the measurement error is ±0.0001 g/cm³ /°C (±0.00005 g/cm³ /°F)

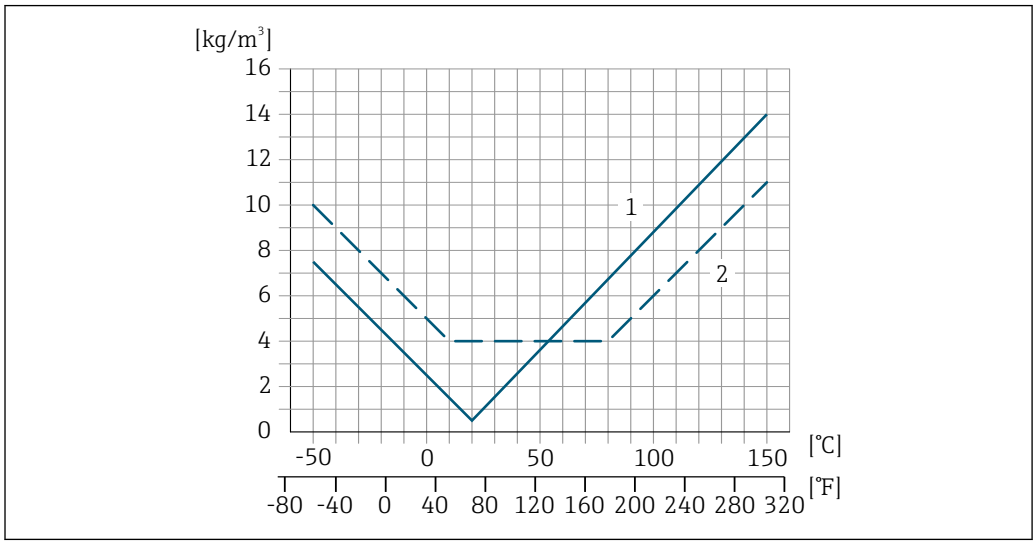

1 *Field density adjustment, for example at +20 °C (+68 °F)*
2 *Special density calibration*

Temperature
±0.005 · T °C (± 0.005 · (T − 32) °F)

Influence of medium pressure

The following shows how the process pressure (gauge pressure) affects the accuracy of the mass flow.

o.r. = of reading

It is possible to compensate for the effect by:
- Reading in the current pressure measured value via the current input or a digital input.
- Specifying a fixed value for the pressure in the device parameters.

Operating Instructions .

DN		[% o.r./bar]	[% o.r./psi]
[mm]	[in]		
8	⅜	no effect	no effect
15	½	no effect	no effect
15 FB	½ FB	+0.003	+0.0002
25	1	+0.003	+0.0002
25 FB	1 FB	no effect	no effect
40	1½	no effect	no effect
40 FB	1½ FB	no effect	no effect
50	2	no effect	no effect
50 FB	2 FB	no effect	no effect
80	3	no effect	no effect
FB = Full bore			

Design fundamentals

o.r. = of reading, o.f.s. = of full scale value

BaseAccu = base accuracy in % o.r., BaseRepeat = base repeatability in % o.r.

MeasValue = measured value; ZeroPoint = zero point stability

Calculation of the maximum measured error as a function of the flow rate

Flow rate	Maximum measured error in % o.r.
$\geq \frac{\text{ZeroPoint}}{\text{BaseAccu}} \cdot 100$ A0021332	± BaseAccu A0021339
$< \frac{\text{ZeroPoint}}{\text{BaseAccu}} \cdot 100$ A0021333	$\pm \frac{\text{ZeroPoint}}{\text{MeasValue}} \cdot 100$ A0021334

Calculation of the maximum repeatability as a function of the flow rate

Flow rate	Maximum repeatability in % o.r.
$\geq \frac{½ \cdot \text{ZeroPoint}}{\text{BaseRepeat}} \cdot 100$ A0021335	± BaseRepeat A0021340
$< \frac{½ \cdot \text{ZeroPoint}}{\text{BaseRepeat}} \cdot 100$ A0021336	$\pm ½ \cdot \frac{\text{ZeroPoint}}{\text{MeasValue}} \cdot 100$ A0021337

Example of maximum measurement error

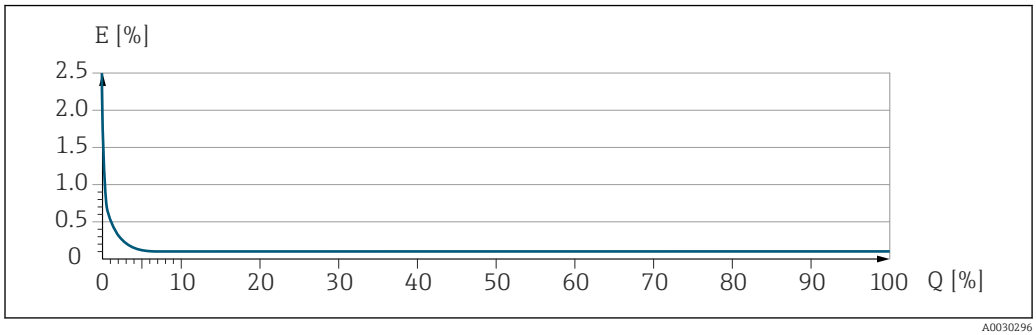

E Maximum measurement error in % o.r. (example)
Q Flow rate in % of maximum full scale value

16.7 Installation

Installation requirements	→ 📄 18

16.8 Environment

Ambient temperature range	→ 📄 20→ 📄 20 **Temperature tables** Observe the interdependencies between the permitted ambient and fluid temperatures when operating the device in hazardous areas. For detailed information on the temperature tables, see the separate document entitled "Safety Instructions" (XA) for the device.
Storage temperature	−40 to +80 °C (−40 to +176 °F), preferably at +20 °C (+68 °F) (standard version) −50 to +80 °C (−58 to +176 °F) (Order code for *"Test, certificate"*, option JM)
Climate class	DIN EN 60068-2-38 (test Z/AD)
Degree of protection	**Transmitter and sensor** ▪ Standard: IP66/67, Type 4X enclosure, suitable for pollution degree 4 ▪ With the order code for "Sensor options", option CM: IP69 can also be ordered ▪ When the housing is open: IP20, Type 1 enclosure, suitable for pollution degree 2 ▪ Display module: IP20, Type 1 enclosure, suitable for pollution degree 2 **Safety Barrier Promass 100** IP20
Vibration resistance and shock resistance	**Sinusoidal vibration similar to IEC 60068-2-6** ▪ 2 to 8.4 Hz, 3.5 mm peak ▪ 8.4 to 2 000 Hz, 1 g peak **Broadband random vibration similar to IEC 60068-2-64**

- 10 to 200 Hz, 0.003 g^2/Hz
- 200 to 2 000 Hz, 0.001 g^2/Hz
- Total: 1.54 g rms

Half-sine shocks similar to IEC 60068-2-27

6 ms 30 g

Rough handling shocks similar to IEC 60068-2-31

Electromagnetic compatibility (EMC)

- As per IEC/EN 61326
- As per NAMUR Recommendation 21 (NE 21), NAMUR Recommendation 21 (NE 21) is fulfilled when the device is installed in accordance with NAMUR Recommendation 98 (NE 98).
- As per IEC/EN 61000-6-2 and IEC/EN 61000-6-4
- Complies with emission limits for industry as per EN 55011 (class A)

Details are provided in the Declaration of Conformity.

This unit is not intended for use in residential environments and cannot guarantee adequate protection of the radio reception in such environments.

16.9 Process

Medium temperature range

−50 to +150 °C (−58 to +302 °F)

Dependency of ambient temperature on medium temperature

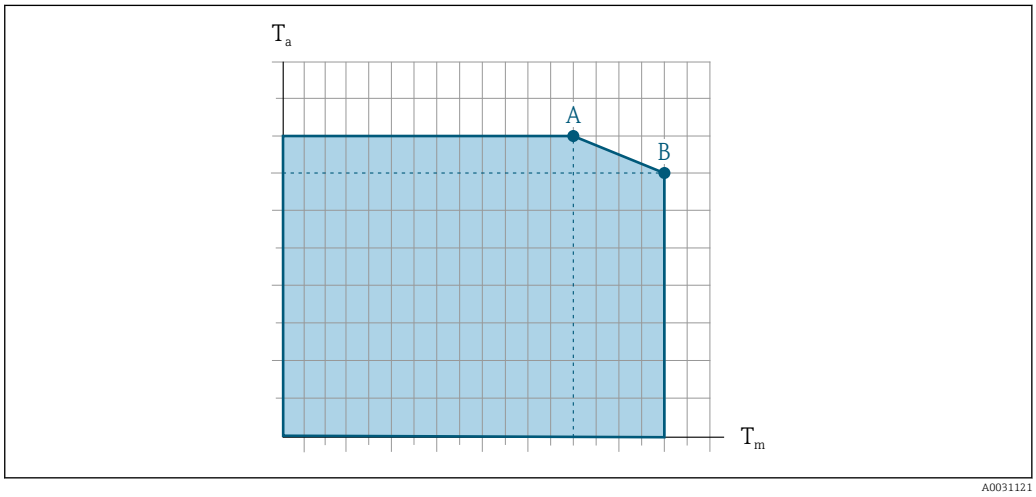

18 Exemplary representation, values in the table below.

T_a Ambient temperature
T_m Medium temperature
A Maximum permitted medium temperature T_m at $T_{a\,max}$ = 60 °C (140 °F); higher medium temperatures T_m require a reduction in the ambient temperature T_a
B Maximum permitted ambient temperature T_a for the maximum specified medium temperature T_m of the sensor

Values for devices that are used in the hazardous area:
Separate Ex documentation (XA) for the device .

Not insulated				Insulated			
A		B		A		B	
T_a	T_m	T_a	T_m	T_a	T_m	T_a	T_m
60 °C (140 °F)	150 °C (302 °F)	–	–	60 °C (140 °F)	120 °C (248 °F)	55 °C (131 °F)	150 °C (302 °F)

Medium density

0 to 5 000 kg/m³ (0 to 312 lb/cf)

Pressure/temperature ratings

For an overview of the pressure/temperature ratings for the process connections, see the Technical Information

Sensor housing

The sensor housing is filled with dry nitrogen gas and protects the electronics and mechanics inside.

If a measuring tube fails (e.g. due to process characteristics like corrosive or abrasive fluids), the fluid will initially be contained by the sensor housing.

If the sensor is to be purged with gas (gas detection), it should be equipped with purge connections.

Do not open the purge connections unless the containment can be filled immediately with a dry, inert gas. Use only low pressure to purge.

Maximum pressure: 5 bar (72.5 psi)

Burst pressure of the sensor housing

The following sensor housing burst pressures are only valid for standard devices and/or devices equipped with closed purge connections (not opened/as delivered).

If a device fitted with purge connections (order code for "Sensor option", option CH "Purge connection") is connected to the purge system, the maximum pressure is determined by the purge system itself or by the device, depending on which component has the lower pressure classification.

The sensor housing burst pressure refers to a typical internal pressure which is reached prior to mechanical failure of the sensor housing and which was determined during type testing. The corresponding type test declaration can be ordered with the device (order code for "Additional approval", option LN "Sensor housing burst pressure, type test").

DN		Sensor housing burst pressure	
[mm]	[in]	[bar]	[psi]
8	⅜	220	3 190
15	½	220	3 190
15 FB	½ FB	235	3 408
25	1	235	3 408
25 FB	1 FB	220	3 190
40	1½	220	3 190
40 FB	1 ½ FB	235	3 408
50	2	235	3 408
50 FB	2 FB	460	6 670

DN		Sensor housing burst pressure	
[mm]	[in]	[bar]	[psi]
80	3	460	6 670
FB = Full bore			

For information on the dimensions: see the "Mechanical construction" section of the "Technical Information" document

Internal cleaning

- CIP cleaning
- SIP cleaning
- Cleaning with pigs

Options

Oil- and grease-free version for wetted parts, without declaration
Order code for "Service", option HA [2)]

Flow limit

Select the nominal diameter by optimizing between the required flow range and permissible pressure loss.

For an overview of the full scale values for the measuring range, see the "Measuring range" section → 📄 89

- The minimum recommended full scale value is approx. 1/20 of the maximum full scale value
- For the most common applications, 20 to 50 % of the maximum full scale value can be considered ideal
- A low full scale value must be selected for abrasive media (such as liquids with entrained solids): flow velocity < 1 m/s (< 3 ft/s).
- For gas measurement the following rules apply:
  - The flow velocity in the measuring tubes should not exceed half the speed of sound (0.5 Mach)
  - The maximum mass flow depends on the density of the gas: formula → 📄 89

To calculate the flow limit, use the *Applicator* sizing tool → 📄 86

Pressure loss

To calculate the pressure loss, use the *Applicator* sizing tool → 📄 86

System pressure

→ 📄 20

2) Cleaning only refers to the measuring instrument. Any accessories that have been supplied are not cleaned.

16.10 Mechanical construction

Design, dimensions

For the dimensions and installed lengths of the device, see the "Technical Information" document, "Mechanical construction" section

Weight

All values (weight exclusive of packaging material) refer to devices with EN/DIN PN 40 flanges. Weight specifications including transmitter: order code for "Housing", option A "Compact, aluminum coated".

Weight in SI units

DN [mm]	Weight [kg]
8	11
15	13
15 FB	19
25	20
25 FB	39
40	40
40 FB	65
50	67
50 FB	118
80	122
FB = Full bore	

Weight in US units

DN [in]	Weight [lbs]
3/8	24
½	29
½ FB	42
1	44
1 FB	86
1½	88
1½ FB	143
2	148
2 FB	260
3	269
FB = Full bore	

Safety Barrier Promass 100

49 g (1.73 ounce)

Materials

Transmitter housing

- Order code for "Housing", option **A** "Compact, aluminum coated": Aluminum, AlSi10Mg, coated
- Order code for "Housing", option **B** "Compact, hygienic, stainless": Hygienic version, stainless steel 1.4301 (304)
- Order code for "Housing", option **C** "Ultra-compact, hygienic, stainless": Hygienic version, stainless steel 1.4301 (304)

Cable entries/cable glands

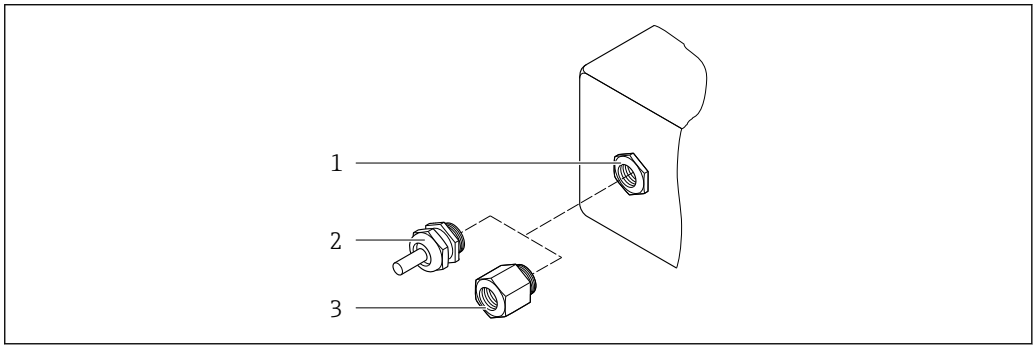

19 Possible cable entries/cable glands

1 Internal thread M20 × 1.5
2 Cable gland M20 × 1.5
3 Adapter for cable entry with internal thread G ½" or NPT ½"

Order code for "Housing", option A "Compact, aluminum, coated"

The various cable entries are suitable for hazardous and non-hazardous areas.

Cable entry/cable gland	Material
Cable gland M20 × 1.5	Nickel-plated brass
Adapter for cable entry with female thread G ½"	
Adapter for cable entry with female thread NPT ½"	

Order code for "Housing", option B "Compact, hygienic, stainless"

The various cable entries are suitable for hazardous and non-hazardous areas.

Cable entry/cable gland	Material
Cable gland M20 × 1.5	Stainless steel, 1.4404 (316L)
Adapter for cable entry with female thread G ½"	
Adapter for cable entry with female thread NPT ½"	

Device plug

Electrical connection	Material
Plug M12x1	▪ Socket: Stainless steel, 1.4404 (316L) ▪ Contact housing: Polyamide ▪ Contacts: Gold-plated brass

Sensor housing

- Acid and alkali-resistant outer surface
- Stainless steel 1.4301 (304)

Measuring tubes

Grade 9 titanium

Process connections

- Flanges similar to EN 1092-1 (DIN 2501)/similar to ASME B16.5/similar to JIS:
  - Stainless steel 1.4301 (304)
  - Wetted parts: Grade 2 titanium
- All other process connections:
  Grade 2 titanium

Available process connections → 104

Seals

Welded process connections without internal seals

Accessories

Safety Barrier Promass 100

Housing: Polyamide

Process connections

- Fixed flange connections:
  - EN 1092-1 (DIN 2501) flange
  - EN 1092-1 (DIN 2512N) flange
  - ASME B16.5 flange
  - JIS B2220 flange
  - DIN 11864-2 Form A flange, DIN 11866 series A, flange with notch
- Clamp connections:
  Tri-Clamp (OD tubes), DIN 11866 series C
- Eccentric clamp connections:
  Eccen. Tri-Clamp, DIN 11866 series C
- Thread:
  - DIN 11851 thread, DIN 11866 series A
  - SMS 1145 thread
  - ISO 2853 thread, ISO 2037
  - DIN 11864-1 Form A thread, DIN 11866 series A

Process connection materials

Surface roughness

All data relate to parts in contact with medium.

The following surface roughness categories can be ordered:

Category	Method	Option(s)/Order code "Measuring tube mat., wetted surface"
Not polished	–	CA
Ra ≤ 0.76 µm (30 µin) [1]	Mechanically polished [2]	CB
Ra ≤ 0.38 µm (15 µin) [1]	Mechanically polished [2]	CD

1) Ra according to ISO 21920
2) Inaccessible weld seams between pipe and manifold are excluded

16.11 Operability

Service interface

Via service interface (CDI)

Modbus RS485

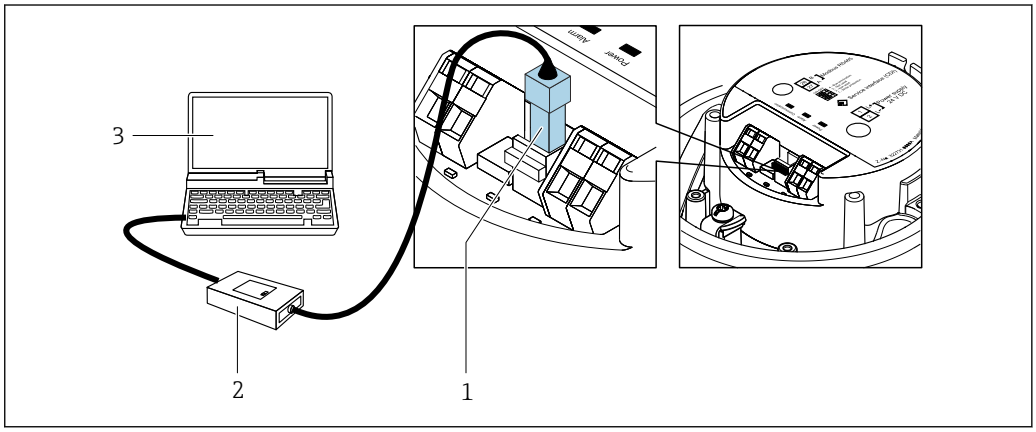

A0030216

1 *Service interface (CDI) of the measuring instrument*
2 *Commubox FXA291*
3 *Computer with FieldCare operating tool with COM DTM "CDI Communication FXA291"*

Languages

Can be operated in the following languages:
Via "FieldCare" operating tool: English, German, French, Spanish, Italian, Chinese, Japanese

16.12 Certificates and approvals

Current certificates and approvals for the product are available at www.endress.com on the relevant product page:

1. Select the product using the filters and search field.
2. Open the product page.
3. Select **Downloads**.

CE mark

The device meets the legal requirements of the applicable EU Directives. These are listed in the corresponding EU Declaration of Conformity along with the standards applied.

Endress+Hauser confirms successful testing of the device by affixing to it the CE mark.

UKCA marking

The device meets the legal requirements of the applicable UK regulations (Statutory Instruments). These are listed in the UKCA Declaration of Conformity along with the designated standards. By selecting the order option for UKCA marking, Endress+Hauser confirms a successful evaluation and testing of the device by affixing the UKCA mark.

Contact address Endress+Hauser UK:
Endress+Hauser Ltd.
Floats Road
Manchester M23 9NF
United Kingdom
www.uk.endress.com

RCM marking

The measuring system meets the EMC requirements of the "Australian Communications and Media Authority (ACMA)".

Ex-approval	The devices are certified for use in hazardous areas and the relevant safety instructions are provided in the separate "Safety Instructions" (XA) document. Reference is made to this document on the nameplate.

Hygienic compatibility	▪ 3-A approval
	  ▪ Only measuring instruments with the order code for "Additional approval", option LP "3A" have 3-A approval.
	  ▪ The 3-A approval refers to the measuring instrument.
	  ▪ When installing the measuring instrument, ensure that no liquid can accumulate on the outside of the measuring instrument.
	  A remote display module must be installed in accordance with the 3-A Standard.
	  ▪ Accessories (e.g. heating jacket, weather protection cover, wall holder unit) must be installed in accordance with the 3-A Standard.
	  Each accessory can be cleaned. Disassembly may be necessary under certain circumstances.
	▪ EHEDG-tested (Type EL Class I)
	  Only devices with the order code for "Additional approval", option LT "EHEDG" have been tested and meet the requirements of the EHEDG.
	  To meet the requirements for EHEDG certification, the device must be used with process connections in accordance with the EHEDG position paper entitled "Easy cleanable Pipe couplings and Process connections" (www.ehedg.org).
	  To meet the requirements for EHEDG certification, the orientation of the device must ensure drainability.
	  Test criteria for cleanability according to EHEDG is a flow velocity of 1.5 m/s in the process line. This speed must be ensured for EHEDG-compliant cleaning.
	▪ FDA CFR 21
	▪ Food Contact Materials Regulation (EC) 1935/2004
	▪ Food Contact Materials Regulation GB 4806
	▪ The requirements of the Food Contact Material regulations must be observed when selecting the material versions.
	Observe special installation instructions

Pharmaceutical compatibility	▪ FDA 21 CFR 177
	▪ USP <87>
	▪ USP <88> Class VI 121 °C
	▪ TSE/BSE Certificate of Suitability
	▪ cGMP
	  Devices with the order code for "Test, certificate", option JG "Conformity with cGMP-derived requirements, declaration" comply with the requirements of cGMP with regard to the surfaces of parts in contact with the medium, design, FDA 21 CFR material conformity, USP Class VI tests and TSE/BSE conformity.
	  A serial number-specific declaration is generated.

Modbus RS485 certification	The measuring instrument meets all the requirements of the MODBUS RS485 conformity test and has the "MODBUS RS485 Conformance Test Policy, Version 2.0". The measuring instrument has successfully passed all the test procedures carried out.

Pressure Equipment Directive	▪ With the marking a) PED/G1/x (x = category) or b) PESR/G1/x (x = category) on the sensor nameplate, Endress+Hauser confirms compliance with the "Essential Safety Requirements" a) specified in Annex I of the Pressure Equipment Directive 2014/68/EU or b) Schedule 2 of Statutory Instruments 2016 No. 1105. ▪ Devices not bearing this marking (without PED or PESR) are designed and manufactured according to sound engineering practice. They meet the requirements of a) Art. 4, Section 3 of the Pressure Equipment Directive 2014/68/EU or b) Part 1, Section 8 of Statutory Instruments 2016 No. 1105. The scope of application is indicated a) in diagrams 6 to 9 in Annex II of the Pressure Equipment Directive 2014/68/EU or b) in Schedule 3, Section 2 of Statutory Instruments 2016 No. 1105.
External standards and guidelines	▪ EN 60529 Degrees of protection provided by enclosure (IP code) ▪ IEC/EN 60068-2-6 Environmental influences: Test procedure - Test Fc: vibrate (sinusoidal). ▪ IEC/EN 60068-2-31 Environmental influences: Test procedure - Test Ec: shocks due to rough handling, primarily for devices. ▪ EN 61010-1 Safety requirements for electrical equipment for measurement, control and laboratory use - general requirements ▪ GB 30439.5 Safety requirements for industrial automation products - Part 5: Flowmeter safety requirements ▪ EN 61326-1/-2-3 EMC requirements for electrical equipment for measurement, control and laboratory use ▪ NAMUR NE 21 Electromagnetic compatibility (EMC) of industrial process and laboratory control equipment ▪ NAMUR NE 32 Data retention in the event of a power failure in field and control instruments with microprocessors ▪ NAMUR NE 43 Standardization of the signal level for the breakdown information of digital transmitters with analog output signal. ▪ NAMUR NE 53 Software of field devices and signal-processing devices with digital electronics ▪ NAMUR NE 80 The application of the pressure equipment directive to process control devices ▪ NAMUR NE 105 Specifications for integrating fieldbus devices in engineering tools for field devices ▪ NAMUR NE 107 Self-monitoring and diagnostics of field devices ▪ NAMUR NE 131 Requirements for field devices for standard applications ▪ NAMUR NE 132 Coriolis mass meter ▪ ETSI EN 300 328 Guidelines for 2.4 GHz radio components. ▪ EN 301489 Electromagnetic compatibility and radio spectrum matters (ERM).

16.13 Application packages

Many different application packages are available to enhance the functionality of the device. Such packages might be needed to address safety aspects or specific application requirements.

The application packages can be ordered with the device or subsequently from Endress+Hauser. Detailed information on the order code in question is available from your local Endress+Hauser sales center or on the product page of the Endress+Hauser website: www.endress.com.

Detailed information on the application packages:
Special Documentation → 110

Heartbeat Technology

Order code for "Application package", option EB "Heartbeat Verification + Monitoring"

Heartbeat Verification
Meets the requirement for traceable verification in accordance with DIN ISO 9001:2015 Clause 7.6 a) "Control of monitoring and measuring equipment".
- Functional testing in the installed state without interrupting the process.
- Traceable verification results on request, including a report.
- Simple testing process via local operation or other operating interfaces.
- Clear measuring point assessment (pass/fail) with high total test coverage within the framework of manufacturer specifications.
- Extension of calibration intervals according to operator's risk evaluation.

Heartbeat Monitoring
Continuously supplies data, which are characteristic of the measuring principle, to an external condition monitoring system for the purpose of preventive maintenance or process analysis. These data enable the operator to:
- Draw conclusions - using these data and other information - about the impact the process influences (e.g. corrosion, abrasion, deposit buildup etc.) have on measuring performance over time.
- Schedule servicing in time.
- Monitor the process or product quality, e.g. gas pockets.

Detailed information on Heartbeat Technology:
Special Documentation → 110

Concentration measurement

Order code for "Application package", option ED "Concentration"

Calculation and outputting of fluid concentrations.

The measured density is converted to the concentration of a substance of a binary mixture using the "Concentration" application package:
Concentration calculation from user-defined tables.

The measured values are output via the digital and analog outputs of the measuring instrument.

For detailed information, see the Special Documentation for the device.

Viscosity

Order code for "Application package", option EG "Viscosity"

In-line and real-time viscosity measurement

Promass I with the "Viscosity" application package also measures the real-time viscosity of the fluid directly in the process, in addition to measuring the mass flow/volume flow/temperature and density.

The following viscosity measurements are performed on liquids:
- Dynamic viscosity
- Kinematic viscosity
- Temperature-compensated viscosity (kinematic and dynamic) in relation to the reference temperature

Viscosity measurement can be used for Newtonian and non-Newtonian applications and supplies accurate measured data irrespective of the flow, even under difficult conditions.

For detailed information, see the Special Documentation for the device.

Special density

Order code for "Application package", option EE "Special density"

Many applications use density as a key measured value for monitoring quality or controlling processes. The device measures the density of the fluid as standard and makes this value available to the control system.

The "Special Density" application package offers high-precision density measurement over a wide density and temperature range particularly for applications subject to varying process conditions.

The following information can be found in the calibration certificate supplied:

- Density performance in air
- Density performance in liquids with different density
- Density performance in water with different temperatures

For detailed information, see the Operating Instructions for the device.

16.14 Accessories

Overview of accessories available to order → 85

16.15 Documentation

For an overview of the scope of the associated Technical Documentation, refer to the following:
- *Device Viewer* (www.endress.com/deviceviewer): Enter the serial number from the nameplate
- *Endress+Hauser Operations app*: Enter serial number from nameplate or scan matrix code on nameplate.

Standard documentation

Brief Operating Instructions

Brief Operating Instructions for the sensor

Measuring instrument	Documentation code
Proline Promass I	KA01284D

Transmitter Brief Operating Instructions

Measuring device	Documentation code
Proline Promass 100	KA01335D

Technical Information

Measuring device	Documentation code
Proline Promass I 100	TI01035D

Description of Device Parameters

Measuring device	Documentation code
Proline Promass 100	GP01035D

Supplementary device-dependent documentation

Safety Instructions

Content	Documentation code
ATEX/IECEx Ex i	XA00159D
ATEX/IECEx Ex nA	XA01029D
cCSAus IS	XA00160D
INMETRO Ex i	XA01219D
INMETRO Ex nA	XA01220D
NEPSI Ex i	XA01249D
NEPSI Ex nA	XA01262D

Special Documentation

Contents	Documentation code
Information on the Pressure Equipment Directive	SD01614D
Viscosity measurement	SD01151D

Installation Instructions

Contents	Note
Installation instructions for spare part sets and accessories	▪ Access the overview of all the available spare part sets via *Device Viewer* → 🗎 83 ▪ Accessories available for order with Installation Instructions → 🗎 85

Index

0 ... 9
3-A approval . . . 106

A
Access authorization to parameters
  Read access . . . 40
  Write access . . . 40
Access code . . . 40
  Incorrect input . . . 40
Adapting the diagnostic behavior . . . 74
Ambient conditions
  Storage temperature . . . 98
  Vibration resistance and shock resistance . . . 98
Application . . . 88
Application packages . . . 108
Applicator . . . 89
Approvals . . . 105
Auto scan buffer
  see Modbus RS485 Modbus data map

C
Cable entries
  Technical data . . . 93
Cable entry
  Degree of protection . . . 34
CE mark . . . 10, 105
Certificates . . . 105
cGMP . . . 106
Check
  Connection . . . 35
  Received goods . . . 12
Checklist
  Post-connection check . . . 35
  Post-installation check . . . 24
CIP cleaning . . . 101
Climate class . . . 98
Commissioning . . . 48
  Advanced settings . . . 57
  Configuring the device . . . 48
Configuring error response mode, Modbus RS485 . . . 73
Connecting the device . . . 30
Connection
  see Electrical connection
Connection cable . . . 25
Connection preparations . . . 29
Connection tools . . . 25
Current consumption . . . 93

D
Date of manufacture . . . 13
Declaration of Conformity . . . 10
Degree of protection . . . 34, 98
Design
  Measuring device . . . 11
Design fundamentals
  Measurement error . . . 97
  Repeatability . . . 97
Device
  Configuring . . . 48
  Preparing for electrical connection . . . 29
Device components . . . 11
Device description files . . . 43
Device fuse . . . 93
Device locking, status . . . 64
Device name
  Sensor . . . 14
  Transmitter . . . 13
Device repair . . . 83
Device revision . . . 43
Device type code . . . 43
Device Viewer . . . 83
DeviceCare . . . 42
  Device description file . . . 43
Diagnostic information
  Communication interface . . . 73
  Design, description . . . 73
  DeviceCare . . . 72
  FieldCare . . . 72
  LED . . . 70
  Overview . . . 74
  Remedial actions . . . 74
Diagnostic list . . . 77
DIP switch
  see Write protection switch
Disabling write protection . . . 62
Display area
  For operational display . . . 39
Display values
  For locking status . . . 64
Disposal . . . 84
Document
  Function . . . 6
  Symbols . . . 6
Document function . . . 6
Documentation . . . 109
Down pipe . . . 18

E
EHEDG-tested . . . 106
Electrical connection
  Commubox FXA291 . . . 41, 105
  Degree of protection . . . 34
  Measuring instrument . . . 25
  Operating tools
    Via service interface (CDI) . . . 41, 105
Electromagnetic compatibility . . . 99
Enabling write protection . . . 62
Error messages
  see Diagnostic messages
Event logbook . . . 77
Ex-approval . . . 106

Extended order code
Sensor . . . 14
Transmitter . . . 13

F
FDA . . . 106
Field of application
Residual risks . . . 10
FieldCare . . . 41
Device description file . . . 43
Function . . . 41
Filtering the event logbook . . . 78
Firmware
Release date . . . 43
Version . . . 43
Firmware history . . . 81
Flow direction . . . 19, 24
Flow limit . . . 101
Food Contact Materials Regulation . . . 106
Function codes . . . 43
Functions
see Parameter

G
Galvanic isolation . . . 91

H
Hardware write protection . . . 62
Hygienic compatibility . . . 106

I
I/O electronics module . . . 11, 30
Identifying the measuring instrument . . . 12
Incoming acceptance . . . 12
Indication
Current diagnostic event . . . 76
Previous diagnostic event . . . 76
Influence
Medium pressure . . . 97
Medium temperature . . . 96
Information about this document . . . 6
Inlet runs . . . 19
Input variables . . . 89
Inspection
Installation . . . 24
Installation . . . 18
Installation dimensions . . . 20
Installation requirements
Down pipe . . . 18
Inlet and outlet runs . . . 19
Installation dimensions . . . 20
Mounting location . . . 18
Orientation . . . 19
Sensor heating . . . 21
Thermal insulation . . . 20
Vibrations . . . 21
Intended use . . . 9
Internal cleaning . . . 101

L
Languages, operation options . . . 105
Local display
see Operational display
Low flow cut off . . . 91

M
Main electronics module . . . 11
Maintenance work . . . 82
Manufacturer ID . . . 43
Manufacturing date . . . 14
Materials . . . 103
Maximum measurement error . . . 94
Measured variables
see Process variables
Measurement accuracy . . . 94
Measuring and test equipment . . . 82
Measuring device
Conversion . . . 83
Design . . . 11
Repairs . . . 83
Measuring instrument
Disposal . . . 84
Installing the sensor . . . 24
Preparing for mounting . . . 23
Removing . . . 84
Measuring principle . . . 88
Measuring range
For gases . . . 89
For liquids . . . 89
Measuring range, recommended . . . 101
Measuring system . . . 88
Medium density . . . 100
Medium pressure
Influence . . . 97
Medium temperature
Influence . . . 96
Menu
Diagnostics . . . 76
Operation . . . 64
Setup . . . 48
Menus
For device configuration . . . 48
For specific settings . . . 57
Modbus RS485
Configuring error response mode . . . 73
Diagnostic information . . . 73
Function codes . . . 43
Modbus data map . . . 46
Read access . . . 43
Reading out data . . . 47
Register addresses . . . 44
Register information . . . 44
Response time . . . 44
Scan list . . . 46
Write access . . . 43
Modbus RS485 certification . . . 106
Mounting dimensions
see Installation dimensions

Mounting location . . . 18
Mounting preparations . . . 23
Mounting requirements
  Static pressure . . . 20
Mounting tools . . . 23

N
Nameplate
  Promass 100 safety barrier . . . 15
  Sensor . . . 14
  Transmitter . . . 13
Netilion . . . 82

O
Operable flow range . . . 90
Operating menu
  Menus, submenus . . . 37
  Structure . . . 37
  Submenus and user roles . . . 38
Operating philosophy . . . 38
Operation . . . 64
Operation options . . . 36
Operational display . . . 39
Operational safety . . . 10
Order code . . . 13, 14
Orientation (vertical, horizontal) . . . 19
Outlet runs . . . 19
Output signal . . . 91
Output variables . . . 91

P
Packaging disposal . . . 17
Parameter settings
  Administration (Submenu) . . . 61
  Advanced setup (Submenu) . . . 57
  Communication (Submenu) . . . 53
  Corrected volume flow calculation (Submenu) . . . 58
  Device information (Submenu) . . . 79
  Diagnostics (Menu) . . . 76
  Low flow cut off (Wizard) . . . 55
  Measured variables (Submenu) . . . 64
  Medium selection (Submenu) . . . 52
  Partially filled pipe detection (Wizard) . . . 56
  Sensor adjustment (Submenu) . . . 59
  Setup (Menu) . . . 48
  Simulation (Submenu) . . . 61
  System units (Submenu) . . . 49
  Totalizer (Submenu) . . . 67
  Totalizer 1 to n (Submenu) . . . 60
  Totalizer handling (Submenu) . . . 68
  Zero point adjustment (Submenu) . . . 59
Performance characteristics . . . 94
Pharmaceutical compatibility . . . 106
Post-connection check . . . 48
Post-connection check (checklist) . . . 35
Post-installation check . . . 48
Post-installation check (checklist) . . . 24
Potential equalization . . . 32
Power consumption . . . 92
Power supply failure . . . 93
Pressure Equipment Directive . . . 107
Pressure loss . . . 101
Pressure/temperature ratings . . . 100
Process connections . . . 104
Process variables
  Calculated . . . 89
  Measured . . . 89
Product safety . . . 10
Protecting parameter settings . . . 62

R
RCM marking . . . 105
Read access . . . 40
Reading off measured values . . . 64
Reading out diagnostic information, Modbus RS485 . . . 73
Recalibration . . . 82
Reference operating conditions . . . 94
Registered trademarks . . . 8
Repair . . . 83
  Notes . . . 83
Repair of a device . . . 83
Repeatability . . . 96
Replacement
  Device components . . . 83
Requirements for personnel . . . 9
Response time . . . 96
Return . . . 83

S
Safety . . . 9
Safety Barrier Promass 100 . . . 28
Sensor
  Installing . . . 24
Sensor heating . . . 21
Sensor housing . . . 100
Serial number . . . 13, 14
Services
  Maintenance . . . 82
  Repair . . . 83
Setting the operating language . . . 48
Settings
  Adapting the measuring device to the process conditions . . . 68
  Administration . . . 61
  Communication interface . . . 53
  Low flow cut off . . . 55
  Medium . . . 52
  Operating language . . . 48
  Partially filled pipe detection . . . 56
  Resetting the device . . . 79
  Resetting the totalizer . . . 68
  Sensor adjustment . . . 59
  System units . . . 49
  Tag name . . . 48
  Totalizer . . . 60
  Totalizer reset . . . 68
Signal on alarm . . . 91
SIP cleaning . . . 101

Software release 43
Spare part 83
Spare parts 83
Special connection instructions 33
Special mounting instructions
  Hygienic compatibility 22
Standards and guidelines 107
Static pressure 20
Status area
  For operational display 39
Status signals 72
Storage conditions 16
Storage temperature 16
Storage temperature range 98
Structure
  Operating menu 37
Submenu
  Administration 61
  Advanced setup 57
  Calculated values 57
  Communication 53
  Corrected volume flow calculation 58
  Device information 79
  Event logbook 77
  Measured values 64
  Measured variables 64
  Medium selection 52
  Overview 38
  Process variables 57
  Sensor adjustment 59
  Simulation 61
  System units 49
  Totalizer 67
  Totalizer 1 to n 60
  Totalizer handling 68
  Zero point adjustment 59
Supply voltage 92
Surface roughness 104
Symbols
  For communication 39
  For diagnostic behavior 39
  For locking 39
  For measured variable 39
  For measurement channel number 39
  For status signal 39
  In the status area of the local display 39
System design
  Measuring system 88
  see Measuring device design
System integration 43

T

Technical data, overview 88
Temperature range
  Medium temperature 99
  Storage temperature 16
Terminal assignment 26, 30
Terminals 93
Thermal insulation 20
Tool
  Transportation 16
Tools
  Electrical connection 25
  For mounting 23
Transmitter
  Connecting the signal cables 30
Transporting the measuring instrument 16
Troubleshooting
  General 70
TSE/BSE Certificate of Suitability 106

U

UKCA marking 105
Use of measuring instrument
  Borderline cases 9
  Incorrect use 9
  see Intended use
User roles 38
USP Class VI 106

V

Version data for the device 43
Vibration resistance and shock resistance 98
Vibrations 21

W

W@M Device Viewer 12
Weight
  SI units 102
  Transport (notes) 16
  US units 102
Wizard
  Low flow cut off 55
  Partially filled pipe detection 56
Workplace safety 10
Write access 40
Write protection
  Via write protection switch 62
Write protection switch 62

71726238

www.addresses.endress.com

Endress+Hauser

People for Process Automation