BA01422D/06/EN/02.17
71380234

Valid as of version
01.00.zz (Device firmware)

Operating Instructions
Proline Promag P 100 PROFINET

Electromagnetic flowmeter

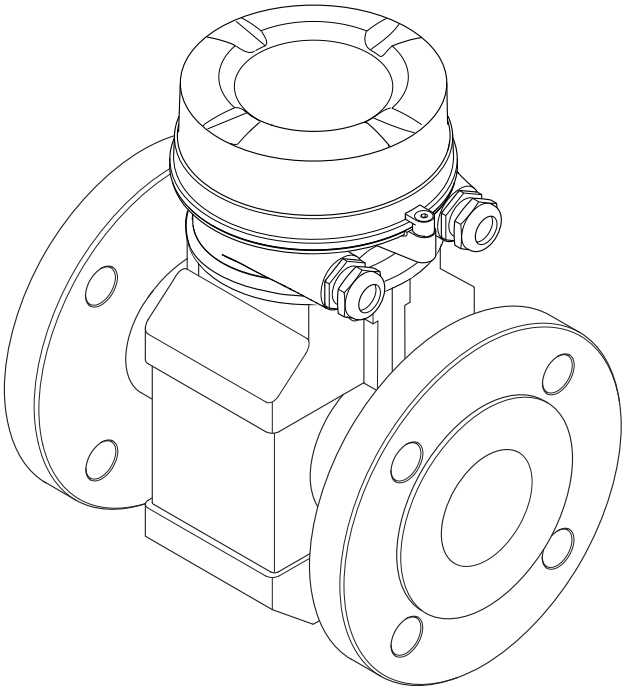

Endress+Hauser
People for Process Automation

- Make sure the document is stored in a safe place such that it is always available when working on or with the device.
- To avoid danger to individuals or the facility, read the "Basic safety instructions" section carefully, as well as all other safety instructions in the document that are specific to working procedures.
- The manufacturer reserves the right to modify technical data without prior notice. Your Endress+Hauser Sales Center will supply you with current information and updates to these instructions.

Table of contents

1 About this document 6
1.1 Document function 6
1.2 Symbols used 6
1.2.1 Safety symbols 6
1.2.2 Electrical symbols 6
1.2.3 Tool symbols 6
1.2.4 Symbols for certain types of information 7
1.2.5 Symbols in graphics 7
1.3 Documentation 7
1.3.1 Standard documentation 8
1.3.2 Supplementary device-dependent documentation 8
1.4 Registered trademarks 8

2 Basic safety instructions 9
2.1 Requirements for the personnel 9
2.2 Designated use 9
2.3 Workplace safety 10
2.4 Operational safety 10
2.5 Product safety 10
2.6 IT security 11

3 Product description 12
3.1 Product design 12
3.1.1 Device version with PROFINET communication type 12

4 Incoming acceptance and product identification 13
4.1 Incoming acceptance 13
4.2 Product identification 13
4.2.1 Transmitter nameplate 14
4.2.2 Sensor nameplate 15
4.2.3 Symbols on measuring device 16

5 Storage and transport 17
5.1 Storage conditions 17
5.2 Transporting the product 17
5.2.1 Measuring devices without lifting lugs 17
5.2.2 Measuring devices with lifting lugs . . 18
5.2.3 Transporting with a fork lift 18
5.3 Packaging disposal 18

6 Installation 19
6.1 Installation conditions 19
6.1.1 Mounting position 19
6.1.2 Requirements from environment and process 21
6.2 Mounting the measuring device 23
6.2.1 Required tools 23
6.2.2 Preparing the measuring device 23
6.2.3 Mounting the sensor 23
6.2.4 Turning the display module 28
6.3 Post-installation check 28

7 Electrical connection 30
7.1 Connection conditions 30
7.1.1 Required tools 30
7.1.2 Requirements for connecting cable . . . 30
7.1.3 Terminal assignment 31
7.1.4 Pin assignment, device plug 31
7.1.5 Preparing the measuring device 32
7.2 Connecting the measuring device 32
7.2.1 Connecting the transmitter 32
7.2.2 Ensure potential equalization 34
7.3 Special connection instructions 36
7.3.1 Connection examples 36
7.4 Hardware settings 36
7.4.1 Setting the device name 36
7.5 Ensuring the degree of protection 38
7.6 Post-connection check 38

8 Operation options 39
8.1 Overview of operating options 39
8.2 Structure and function of the operating menu 40
8.2.1 Structure of the operating menu 40
8.2.2 Operating philosophy 41
8.3 Access to the operating menu via the web browser 41
8.3.1 Function range 41
8.3.2 Prerequisites 42
8.3.3 Establishing a connection 43
8.3.4 Logging on 44
8.3.5 User interface 45
8.3.6 Disabling the Web server 46
8.3.7 Logging out 46
8.4 Access to the operating menu via the operating tool 47
8.4.1 Connecting the operating tool 47
8.4.2 FieldCare 48
8.4.3 DeviceCare 49

9 System integration 50
9.1 Overview of device description files 50
9.1.1 Current version data for the device . . . 50
9.1.2 Operating tools 50
9.2 Device master file (GSD) 51
9.2.1 File name of the device master file (GSD) 51
9.3 Cyclic data transmission 51
9.3.1 Overview of the modules 51

9.3.2 Description of the modules 51
9.3.3 Status coding 57
9.3.4 Factory setting 58

10 Commissioning 59

10.1 Function check 59
10.2 Identifying the device in the PROFINET network 59
10.3 Startup parameterization 59
10.4 Connecting via FieldCare 59
10.5 Setting the operating language 59
10.6 Configuring the measuring device 59
10.6.1 Defining the tag name 60
10.6.2 Setting the system units 60
10.6.3 Displaying the communication interface 62
10.6.4 Configuring the low flow cut off 62
10.6.5 Configuring empty pipe detection . . . 64
10.7 Advanced settings 65
10.7.1 Carrying out a sensor adjustment 65
10.7.2 Configuring the totalizer 65
10.7.3 Carrying out additional display configurations 67
10.7.4 Performing electrode cleaning 69
10.7.5 Using parameters for device administration 70
10.8 Simulation 71
10.9 Protecting settings from unauthorized access 72
10.9.1 Write protection via access code 72
10.9.2 Write protection via write protection switch 73
10.9.3 Write protection via startup parameterization 73

11 Operation 74

11.1 Reading the device locking status 74
11.2 Adjusting the operating language 74
11.3 Configuring the display 74
11.4 Reading measured values 74
11.4.1 "Process variables" submenu 74
11.4.2 Totalizer 76
11.5 Adapting the measuring device to the process conditions 76
11.6 Performing a totalizer reset 77
11.6.1 Function scope of the "Control Totalizer" parameter 77
11.6.2 Function scope of the "Reset all totalizers" parameter 78

12 Diagnostics and troubleshooting . . . 79

12.1 General troubleshooting 79
12.2 Diagnostic information via light emitting diodes 81
12.2.1 Transmitter 81
12.3 Diagnostic information in the Web browser . . 82
12.3.1 Diagnostic options 82
12.3.2 Calling up remedy information 83
12.4 Diagnostic information in DeviceCare or FieldCare 83
12.4.1 Diagnostic options 83
12.4.2 Calling up remedy information 84
12.5 Adapting the diagnostic information 85
12.5.1 Adapting the diagnostic behavior 85
12.6 Overview of diagnostic information 87
12.6.1 Diagnostic of sensor 88
12.6.2 Diagnostic of electronic 89
12.6.3 Diagnostic of configuration 94
12.6.4 Diagnostic of process 97
12.7 Pending diagnostic events 100
12.8 Diagnostic list 101
12.9 Event logbook 101
12.9.1 Reading out the event logbook 101
12.9.2 Filtering the event logbook 101
12.9.3 Overview of information events 102
12.10 Resetting the measuring device 103
12.10.1 Function scope of the "Device reset" parameter 103
12.11 Device information 103
12.12 Firmware history 105

13 Maintenance 106

13.1 Maintenance tasks 106
13.1.1 Exterior cleaning 106
13.1.2 Interior cleaning 106
13.1.3 Replacing seals 106
13.2 Measuring and test equipment 106
13.3 Endress+Hauser services 106

14 Repairs 107

14.1 General notes 107
14.1.1 Repair and conversion concept 107
14.1.2 Notes for repair and conversion 107
14.2 Spare parts 107
14.3 Endress+Hauser services 107
14.4 Return 107
14.5 Disposal 108
14.5.1 Removing the measuring device 108
14.5.2 Disposing of the measuring device . . 108

15 Accessories 109

15.1 Device-specific accessories 109
15.1.1 For the transmitter 109
15.1.2 For the sensor 109
15.2 Communication-specific accessories 109
15.3 Service-specific accessories 110
15.4 System components 110

16 Technical data 111

16.1 Application 111
16.2 Function and system design 111
16.3 Input 111
16.4 Output 112

16.5 Power supply 116
16.6 Performance characteristics 117
16.7 Installation 118
16.8 Environment 118
16.9 Process 119
16.10 Mechanical construction 122
16.11 Operability 126
16.12 Certificates and approvals 128
16.13 Application packages 129
16.14 Accessories 130
16.15 Supplementary documentation 130

Index 132

1 About this document

1.1 Document function

These Operating Instructions contain all the information that is required in various phases of the life cycle of the device: from product identification, incoming acceptance and storage, to mounting, connection, operation and commissioning through to troubleshooting, maintenance and disposal.

1.2 Symbols used

1.2.1 Safety symbols

Symbol	Meaning
DANGER	**DANGER!** This symbol alerts you to a dangerous situation. Failure to avoid this situation will result in serious or fatal injury.
WARNING	**WARNING!** This symbol alerts you to a dangerous situation. Failure to avoid this situation can result in serious or fatal injury.
CAUTION	**CAUTION!** This symbol alerts you to a dangerous situation. Failure to avoid this situation can result in minor or medium injury.
NOTICE	**NOTE!** This symbol contains information on procedures and other facts which do not result in personal injury.

1.2.2 Electrical symbols

Symbol	Meaning
⎓	Direct current
∼	Alternating current
≂	Direct current and alternating current
⏚	**Ground connection** A grounded terminal which, as far as the operator is concerned, is grounded via a grounding system.
⏚	**Protective Earth (PE)** A terminal which must be connected to ground prior to establishing any other connections. The ground terminals are situated inside and outside the device: ▪ Inner ground terminal: Connects the protectiv earth to the mains supply. ▪ Outer ground terminal: Connects the device to the plant grounding system.

1.2.3 Tool symbols

Symbol	Meaning
⬡	Allen key
	Open-ended wrench

1.2.4 Symbols for certain types of information

Symbol	Meaning
✓	**Permitted** Procedures, processes or actions that are permitted.
✓✓	**Preferred** Procedures, processes or actions that are preferred.
✗	**Forbidden** Procedures, processes or actions that are forbidden.
i	**Tip** Indicates additional information.
	Reference to documentation.
	Reference to page.
	Reference to graphic.
▶	Notice or individual step to be observed.
1., 2., 3....	Series of steps.
↳	Result of a step.
?	Help in the event of a problem.
	Visual inspection.

1.2.5 Symbols in graphics

Symbol	Meaning
1, 2, 3, ...	Item numbers
1., 2., 3., ...	Series of steps
A, B, C, ...	Views
A-A, B-B, C-C, ...	Sections
EX	Hazardous area
~~EX~~	Safe area (non-hazardous area)
≋➡	Flow direction

1.3 Documentation

For an overview of the scope of the associated Technical Documentation, refer to the following:

- The *W@M Device Viewer* : Enter the serial number from the nameplate (www.endress.com/deviceviewer)
- The *Endress+Hauser Operations App*: Enter the serial number from the nameplate or scan the 2-D matrix code (QR code) on the nameplate.

For a detailed list of the individual documents along with the documentation code → 📄 130

1.3.1 Standard documentation

Document type	Purpose and content of the document
Technical Information	**Planning aid for your device** The document contains all the technical data on the device and provides an overview of the accessories and other products that can be ordered for the device.
Sensor Brief Operating Instructions	**Guides you quickly to the 1st measured value - Part 1** The Sensor Brief Operating Instructions are aimed at specialists with responsibility for installing the measuring device. ▪ Incoming acceptance and product identification ▪ Storage and transport ▪ Installation
Transmitter Brief Operating Instructions	**Guides you quickly to the 1st measured value - Part 2** The Transmitter Brief Operating Instructions are aimed at specialists with responsibility for commissioning, configuring and parameterizing the measuring device (until the first measured value). ▪ Product description ▪ Installation ▪ Electrical connection ▪ Operation options ▪ System integration ▪ Commissioning ▪ Diagnostic information
Description of Device Parameters	**Reference for your parameters** The document provides a detailed explanation of each individual parameter in the Expert operating menu. The description is aimed at those who work with the device over the entire life cycle and perform specific configurations.

1.3.2 Supplementary device-dependent documentation

Additional documents are supplied depending on the device version ordered: Always comply strictly with the instructions in the supplementary documentation. The supplementary documentation is an integral part of the device documentation.

1.4 Registered trademarks

PROFINET®
Registered trademark of the PROFIBUS User Organization, Karlsruhe, Germany

Microsoft®
Registered trademark of the Microsoft Corporation, Redmond, Washington, USA

2 Basic safety instructions

2.1 Requirements for the personnel

The personnel for installation, commissioning, diagnostics and maintenance must fulfill the following requirements:
- Trained, qualified specialists must have a relevant qualification for this specific function and task.
- Are authorized by the plant owner/operator.
- Are familiar with federal/national regulations.
- Before starting work, read and understand the instructions in the manual and supplementary documentation as well as the certificates (depending on the application).
- Follow instructions and comply with basic conditions.

The operating personnel must fulfill the following requirements:
- Are instructed and authorized according to the requirements of the task by the facility's owner-operator.
- Follow the instructions in this manual.

2.2 Designated use

Application and media
The measuring device described in these Brief Operating Instructions is intended only for flow measurement of liquids with a minimum conductivity of 5 µS/cm.

Depending on the version ordered, the measuring device can also measure potentially explosive, flammable, poisonous and oxidizing media.

Measuring devices for use in hazardous areas, in hygienic applications or where there is an increased risk due to process pressure, are labeled accordingly on the nameplate.

To ensure that the measuring device remains in proper condition for the operation time:
- Keep within the specified pressure and temperature range.
- Only use the measuring device in full compliance with the data on the nameplate and the general conditions listed in the Operating Instructions and supplementary documentation.
- Based on the nameplate, check whether the ordered device is permitted for the intended use in the hazardous area (e.g. explosion protection, pressure vessel safety).
- Use the measuring device only for media to which the process-wetted materials are sufficiently resistant.
- If the measuring device is not operated at atmospheric temperature, compliance with the relevant basic conditions specified in the associated device documentation is absolutely essential: "Documentation" section→ 🗎 7.
- Protect the measuring device permanently against corrosion from environmental influences.

Incorrect use
Non-designated use can compromise safety. The manufacturer is not liable for damage caused by improper or non-designated use.

⚠ WARNING
Danger of breakage due to corrosive or abrasive fluids!
- Verify the compatibility of the process fluid with the sensor material.
- Ensure the resistance of all fluid-wetted materials in the process.
- Keep within the specified pressure and temperature range.

NOTICE

Verification for borderline cases:

- For special fluids and fluids for cleaning, Endress+Hauser is glad to provide assistance in verifying the corrosion resistance of fluid-wetted materials, but does not accept any warranty or liability as minute changes in the temperature, concentration or level of contamination in the process can alter the corrosion resistance properties.

Residual risks

WARNING

The electronics and the medium may cause the surfaces to heat up. This presents a burn hazard!

- For elevated fluid temperatures, ensure protection against contact to prevent burns.

2.3 Workplace safety

For work on and with the device:

- Wear the required personal protective equipment according to federal/national regulations.

For welding work on the piping:

- Do not ground the welding unit via the measuring device.

If working on and with the device with wet hands:

- Due to the increased risk of electric shock, gloves must be worn.

2.4 Operational safety

Risk of injury.

- Operate the device in proper technical condition and fail-safe condition only.
- The operator is responsible for interference-free operation of the device.

Conversions to the device

Unauthorized modifications to the device are not permitted and can lead to unforeseeable dangers.

- If, despite this, modifications are required, consult with Endress+Hauser.

Repair

To ensure continued operational safety and reliability,

- Carry out repairs on the device only if they are expressly permitted.
- Observe federal/national regulations pertaining to repair of an electrical device.
- Use original spare parts and accessories from Endress+Hauser only.

2.5 Product safety

This measuring device is designed in accordance with good engineering practice to meet state-of-the-art safety requirements, has been tested, and left the factory in a condition in which it is safe to operate.

It meets general safety standards and legal requirements. It also complies with the EU directives listed in the device-specific EU Declaration of Conformity. Endress+Hauser confirms this by affixing the CE mark to the device.

2.6 IT security

We only provide a warranty if the device is installed and used as described in the Operating Instructions. The device is equipped with security mechanisms to protect it against any inadvertent changes to the device settings.

IT security measures in line with operators' security standards and designed to provide additional protection for the device and device data transfer must be implemented by the operators themselves.

3 Product description

The device consists of a transmitter and a sensor.

The device is available as a compact version:
The transmitter and sensor form a mechanical unit.

3.1 Product design

3.1.1 Device version with PROFINET communication type

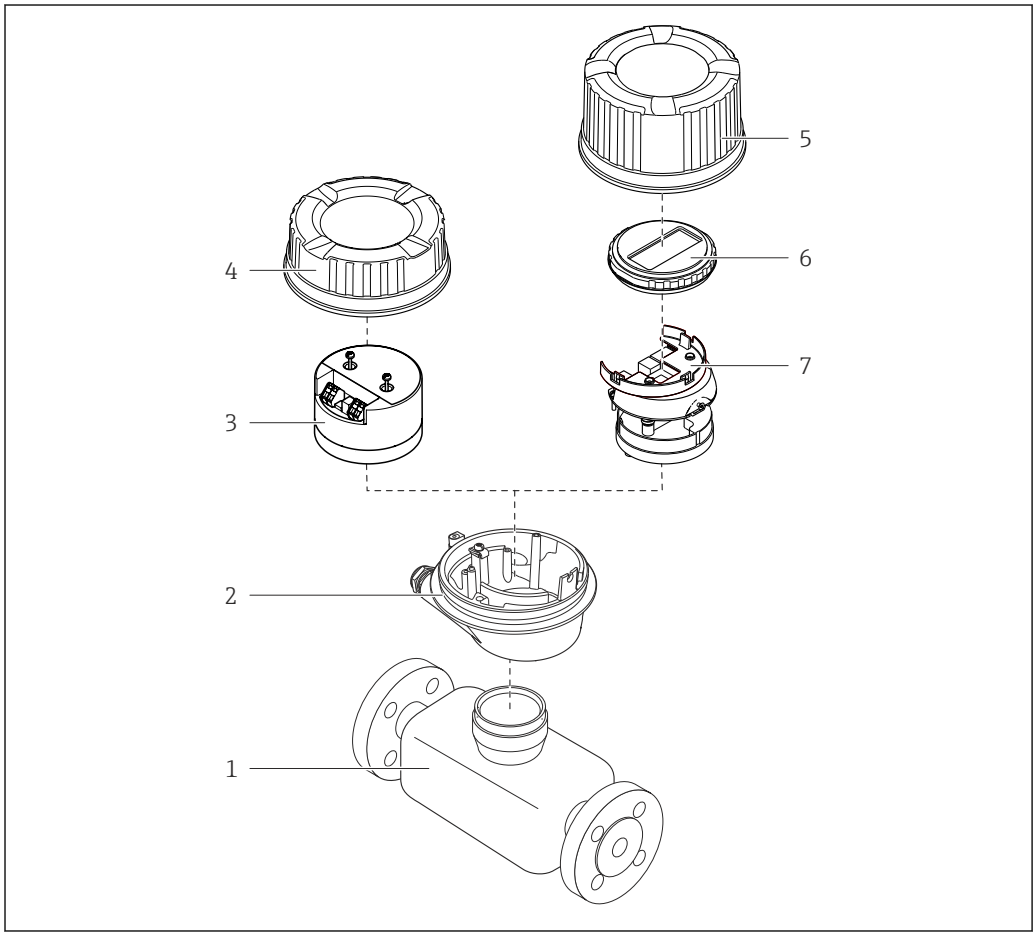

1 Important components of a measuring device

1 Sensor
2 Transmitter housing
3 Main electronics module
4 Transmitter housing cover
5 Transmitter housing cover (version for optional onsite display)
6 Onsite display (optional)
7 Main electronics module (with bracket for optional onsite display)

4 Incoming acceptance and product identification

4.1 Incoming acceptance

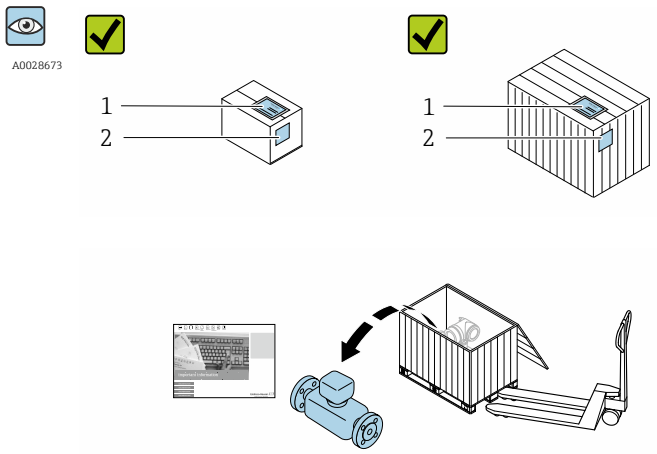

Are the order codes on the delivery note (1) and the product sticker (2) identical?

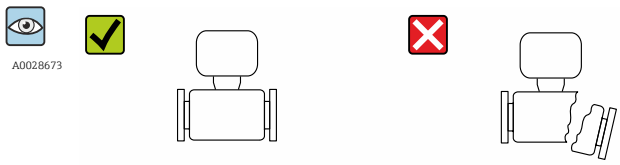

Are the goods undamaged?

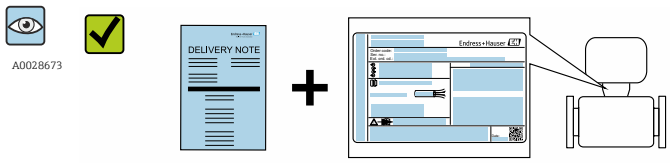

Do the nameplate data match the ordering information on the delivery note?

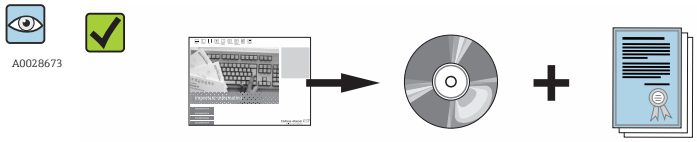

Is the CD-ROM with the Technical Documentation (depends on device version) and documents present?

- If one of the conditions is not satisfied, contact your Endress+Hauser Sales Center.
- Depending on the device version, the CD-ROM might not be part of the delivery! The Technical Documentation is available via the Internet or via the *Endress+Hauser Operations App*, see the "Product identification" section → 14.

4.2 Product identification

The following options are available for identification of the measuring device:
- Nameplate specifications
- Order code with breakdown of the device features on the delivery note
- Enter serial numbers from nameplates in *W@M Device Viewer* (www.endress.com/deviceviewer): All information about the measuring device is displayed.
- Enter the serial number from the nameplates into the *Endress+Hauser Operations App* or scan the 2-D matrix code (QR code) on the nameplate with the *Endress+Hauser Operations App*: all the information for the measuring device is displayed.

For an overview of the scope of the associated Technical Documentation, refer to the following:

- The chapters "Additional standard documentation on the device" → 📄 8 and "Supplementary device-dependent documentation" → 📄 8
- The *W@M Device Viewer*: Enter the serial number from the nameplate (www.endress.com/deviceviewer)
- The *Endress+Hauser Operations App*: Enter the serial number from the nameplate or scan the 2-D matrix code (QR code) on the nameplate.

4.2.1 Transmitter nameplate

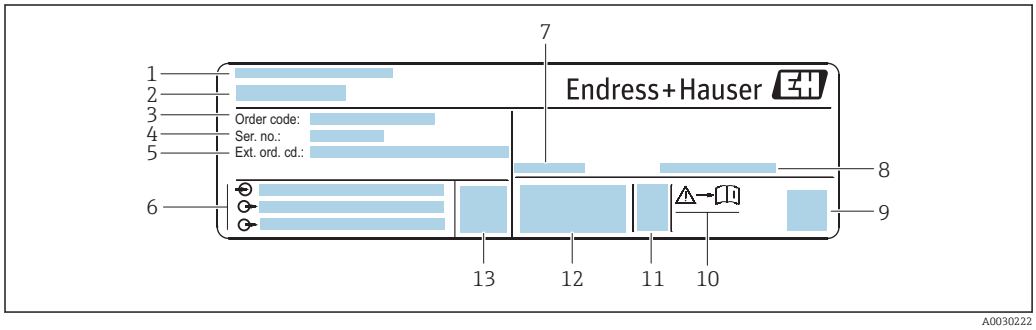

2 Example of a transmitter nameplate

1 *Manufacturing location*
2 *Name of the transmitter*
3 *Order code*
4 *Serial number (ser. no.)*
5 *Extended order code (Ext. ord. cd.)*
6 *Electrical connection data, e.g. available inputs and outputs, supply voltage*
7 *Permitted ambient temperature (T_a)*
8 *Degree of protection*
9 *2-D matrix code*
10 *Document number of safety-related supplementary documentation*
11 *Manufacturing date: year-month*
12 *CE mark, C-Tick*
13 *Firmware version (FW)*

4.2.2 Sensor nameplate

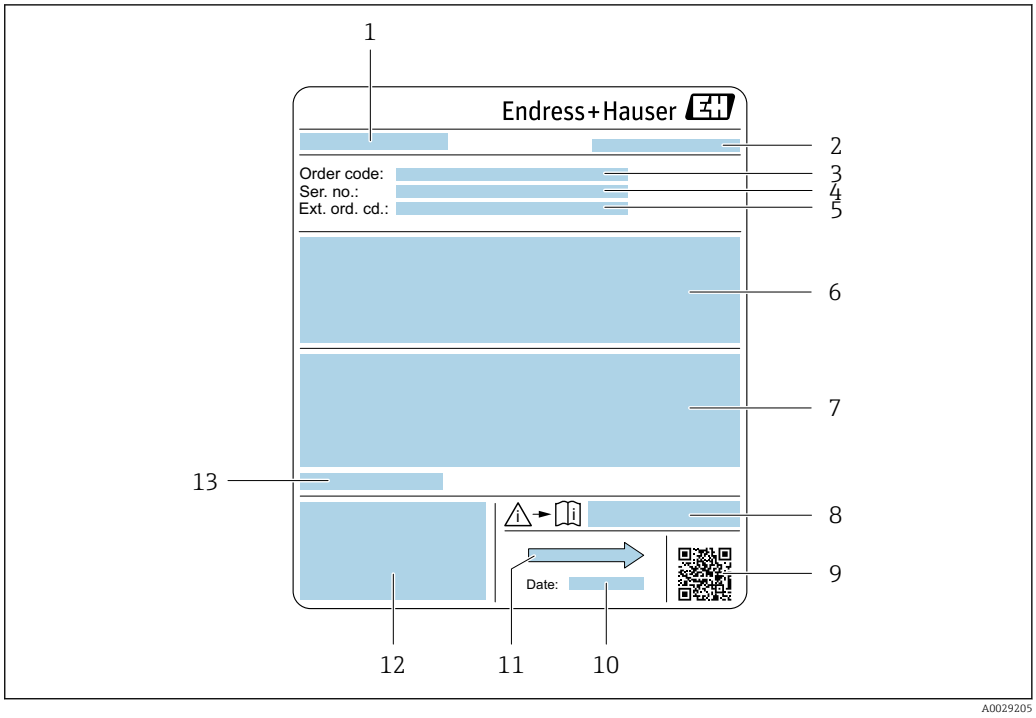

3 Example of sensor nameplate

1 *Name of the sensor*
2 *Manufacturing location*
3 *Order code*
4 *Serial number (ser. no.)*
5 *Extended order code (Ext. ord. cd.)*
6 *Flow; nominal diameter of the sensor; pressure rating; nominal pressure; system pressure; fluid temperature range; material of liner and electrodes*
7 *Approval information for explosion protection, Pressure Equipment Directive and degree of protection*
8 *Document number of safety-related supplementary documentation → 130*
9 *2-D matrix code*
10 *Manufacturing date: year-month*
11 *Flow direction*
12 *CE mark, C-Tick*
13 *Permitted ambient temperature (T_a)*

Order code
The measuring device is reordered using the order code.

Extended order code
- The device type (product root) and basic specifications (mandatory features) are always listed.
- Of the optional specifications (optional features), only the safety and approval-related specifications are listed (e.g. LA). If other optional specifications are also ordered, these are indicated collectively using the # placeholder symbol (e.g. #LA#).
- If the ordered optional specifications do not include any safety and approval-related specifications, they are indicated by the + placeholder symbol (e.g. XXXXXX-ABCDE +).

4.2.3 Symbols on measuring device

Symbol	Meaning
⚠	**WARNING!** This symbol alerts you to a dangerous situation. Failure to avoid this situation can result in serious or fatal injury.
📖	**Reference to documentation** Refers to the corresponding device documentation.
⏚	**Protective ground connection** A terminal which must be connected to ground prior to establishing any other connections.

5 Storage and transport

5.1 Storage conditions

Observe the following notes for storage:
- Store in the original packaging to ensure protection from shock.
- Do not remove protective covers or protective caps installed on process connections. They prevent mechanical damage to the sealing surfaces and contamination in the measuring tube.
- Protect from direct sunlight to avoid unacceptably high surface temperatures.
- Select a storage location where moisture cannot collect in the measuring device as fungus and bacteria infestation can damage the lining.
- Store in a dry and dust-free place.
- Do not store outdoors.

Storage temperature→ 118

5.2 Transporting the product

Transport the measuring device to the measuring point in the original packaging.

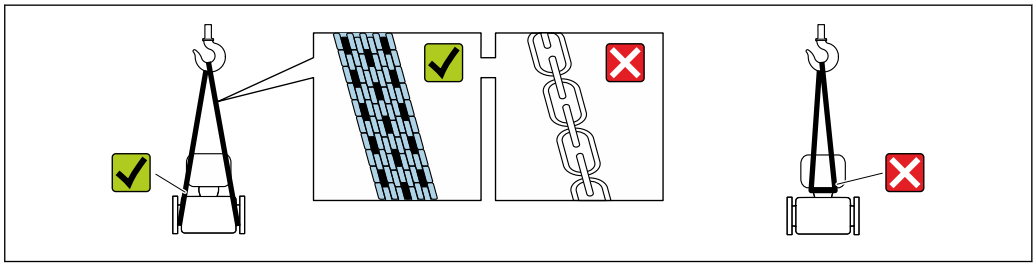

A0029252

Do not remove protective covers or caps installed on process connections. They prevent mechanical damage to the sealing surfaces and contamination in the measuring tube.

5.2.1 Measuring devices without lifting lugs

WARNING

Center of gravity of the measuring device is higher than the suspension points of the webbing slings.

Risk of injury if the measuring device slips.
- Secure the measuring device against slipping or turning.
- Observe the weight specified on the packaging (stick-on label).

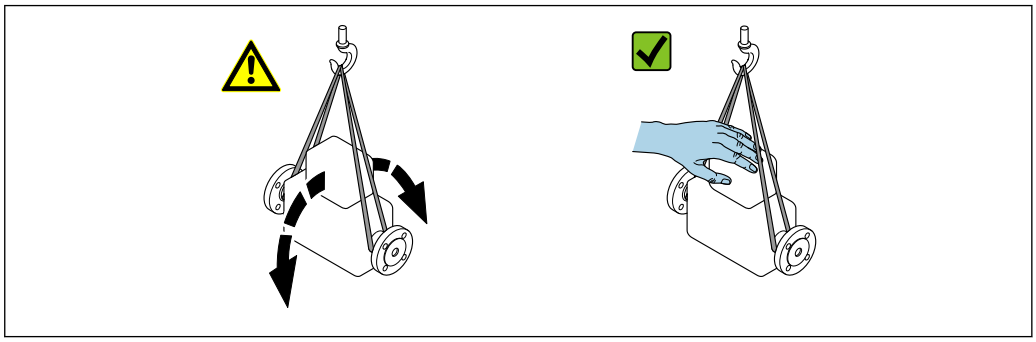

A0029214

5.2.2 Measuring devices with lifting lugs

⚠ CAUTION

Special transportation instructions for devices with lifting lugs

- ▶ Only use the lifting lugs fitted on the device or flanges to transport the device.
- ▶ The device must always be secured at two lifting lugs at least.

5.2.3 Transporting with a fork lift

If transporting in wood crates, the floor structure enables the crates to be lifted lengthwise or at both sides using a forklift.

⚠ CAUTION

Risk of damaging the magnetic coil

- ▶ If transporting by forklift, do not lift the sensor by the metal casing.
- ▶ This would buckle the casing and damage the internal magnetic coils.

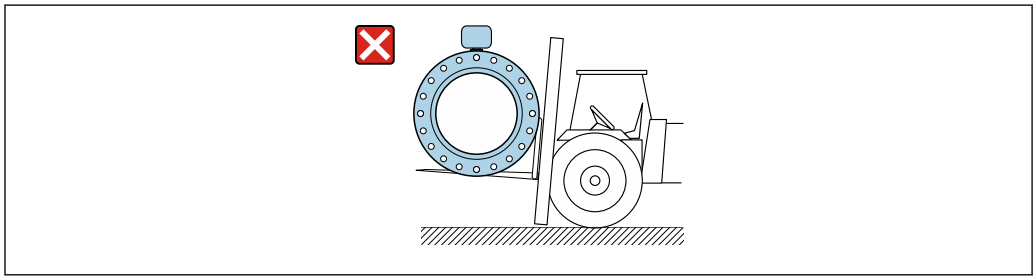

A0029319

5.3 Packaging disposal

All packaging materials are environmentally friendly and 100% recyclable:

- Measuring device secondary packaging: polymer stretch film that conforms to EC Directive 2002/95/EC (RoHS).
- Packaging:
  - Wood crate, treated in accordance with ISPM 15 standard, which is confirmed by the affixed IPPC logo.
    or
  - Carton in accordance with European Packaging Directive 94/62EC; recyclability is confirmed by the affixed RESY symbol.
- Seaworthy packaging (optional): Wood crate, treated in accordance with ISPM 15 standard, which is confirmed by the affixed IPPC logo.
- Carrying and mounting hardware:
  - Disposable plastic pallet
  - Plastic straps
  - Plastic adhesive strips
- Dunnage: Paper cushion

6 Installation

6.1 Installation conditions

6.1.1 Mounting position

Mounting location

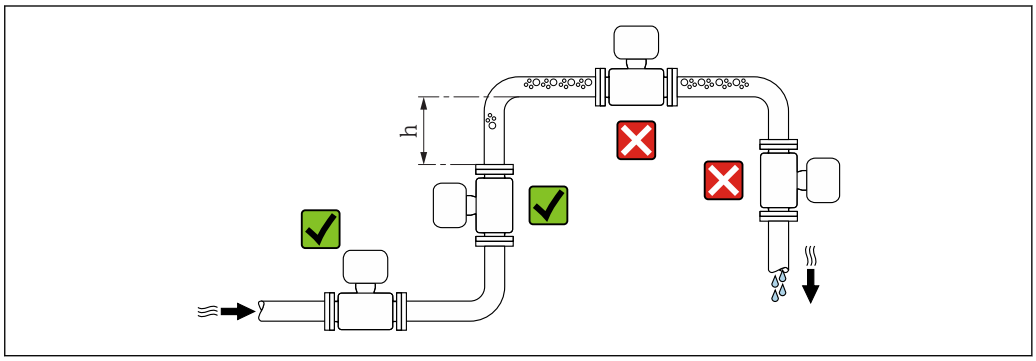

A0029343

Preferably install the sensor in an ascending pipe, and ensure a sufficient distance to the next pipe elbow: h ≥ 2 × DN

Installation in down pipes

Install a siphon with a vent valve downstream of the sensor in down pipes whose length h ≥ 5 m (16.4 ft). This precaution is to avoid low pressure and the consequent risk of damage to the measuring tube. This measure also prevents the system losing prime.

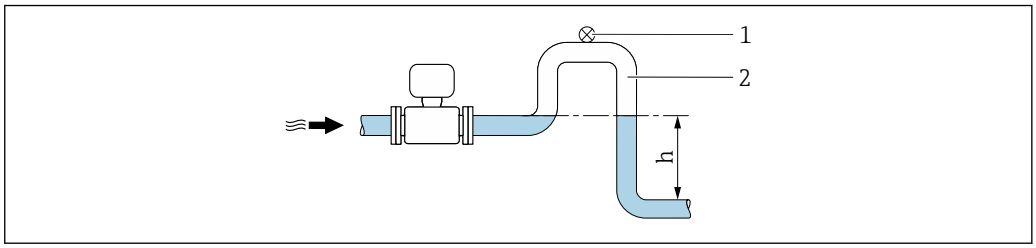

A0028981

4 *Installation in a down pipe*

1 Vent valve
2 Pipe siphon
h Length of down pipe

Installation in partially filled pipes

A partially filled pipe with a gradient necessitates a drain-type configuration.

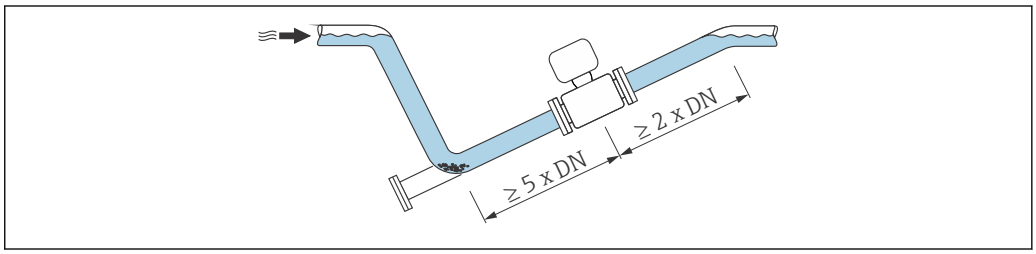

A0029257

For heavy sensors DN ≥ 350 (14")

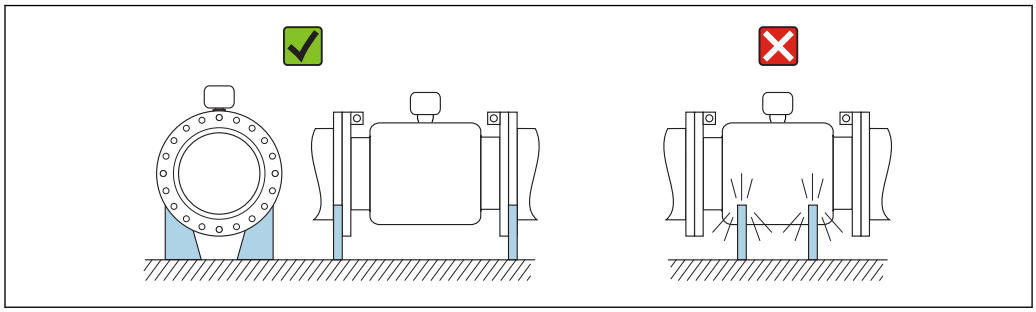

A0016276

Orientation

The direction of the arrow on the sensor nameplate helps you to install the sensor according to the flow direction (direction of medium flow through the piping).

Orientation			Recommendation
A	Vertical orientation	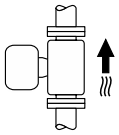 A0015591	✓✓
B	Horizontal orientation, transmitter at top	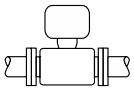 A0015589	✓✓ 1)
C	Horizontal orientation, transmitter at bottom	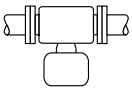 A0015590	✓✓ 2) 3)
D	Horizontal orientation, transmitter at side	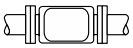 A0015592	✗

1) Applications with low process temperatures may decrease the ambient temperature. To maintain the minimum ambient temperature for the transmitter, this orientation is recommended.
2) Applications with high process temperatures may increase the ambient temperature. To maintain the maximum ambient temperature for the transmitter, this orientation is recommended.
3) To prevent the electronics module from overheating in the case of a sharp rise in temperature (e.g. CIP- or SIP processes), install the device with the transmitter component pointing downwards.

Horizontal

- Ideally, the measuring electrode plane should be horizontal. This prevents brief insulation of the two measuring electrodes by entrained air bubbles.
- Empty pipe detection only works if the transmitter housing is pointing upwards as otherwise there is no guarantee that the empty pipe detection function will actually respond to a partially filled or empty measuring tube.

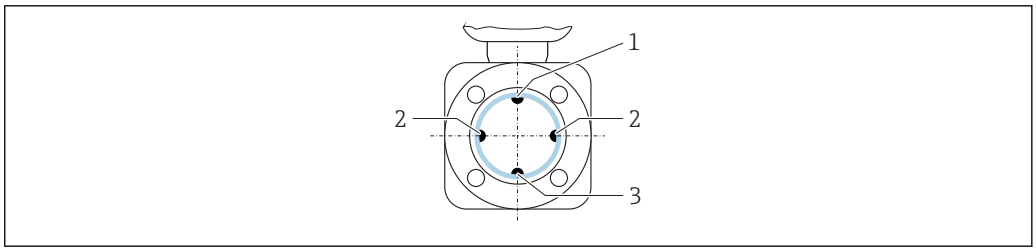

1 *EPD electrode for empty pipe detection*
2 *Measuring electrodes for signal detection*
3 *Reference electrode for potential equalization*

Measuring devices with tantalum or platinum electrodes can be ordered without an EPD electrode. In this case, empty pipe detection is performed via the measuring electrodes.

Inlet and outlet runs

If possible, install the sensor upstream from fittings such as valves, T-pieces or elbows.

Observe the following inlet and outlet runs to comply with accuracy specifications:

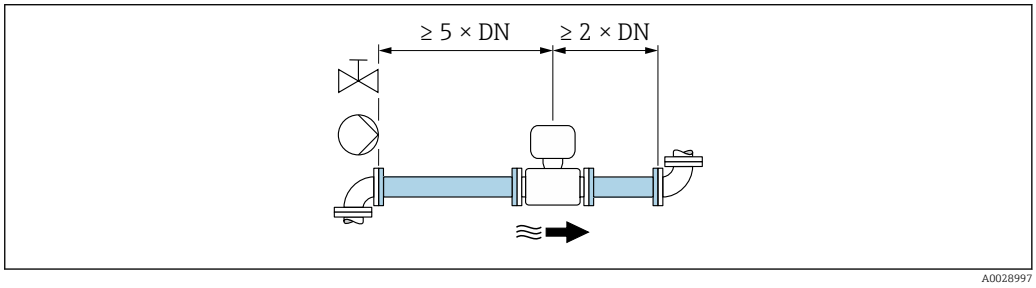

5 *Order code for "Design", option A "Insertion length short, ISO/DVGW until DN400, DN450-2000 1:1" and order code for "Design", option B "Insertion length long, ISO/DVGW until DN400, DN450-2000 1:1.3"*

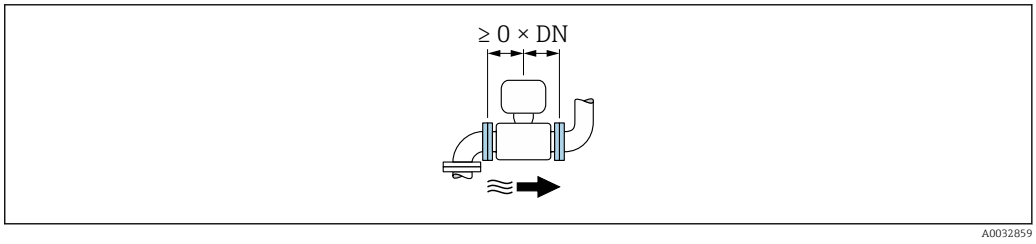

6 *Order code for "Design", option C "Insertion length short ISO/DVGW until DN300, w/o inlet and outlet runs, constricted meas.tube"*

Installation dimensions

For the dimensions and installation lengths of the device, see the "Technical Information" document, "Mechanical construction" section.

6.1.2 Requirements from environment and process

Ambient temperature range

Transmitter	−40 to +60 °C (−40 to +140 °F)
Local display	−20 to +60 °C (−4 to +140 °F), the readability of the display may be impaired at temperatures outside the temperature range.

Sensor	▪ Process connection material, carbon steel: −10 to +60 °C (+14 to +140 °F) ▪ Process connection material, stainless steel: −40 to +60 °C (−40 to +140 °F)
Liner	Do not exceed or fall below the permitted temperature range of the liner .

If operating outdoors:
- Install the measuring device in a shady location.
- Avoid direct sunlight, particularly in warm climatic regions.
- Avoid direct exposure to weather conditions.

System pressure

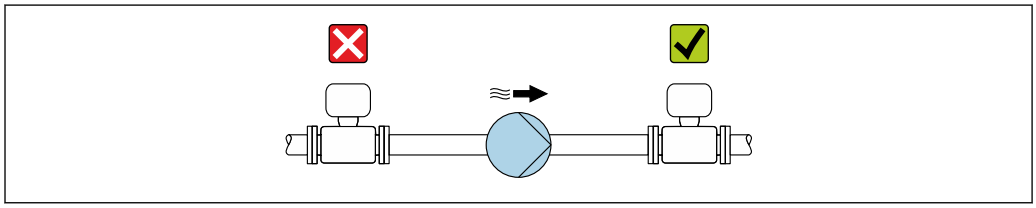

A0028777

Never install the sensor on the pump suction side in order to avoid the risk of low pressure, and thus damage to the liner.

Furthermore, install pulse dampers if reciprocating, diaphragm or peristaltic pumps are used.

- Information on the liner's resistance to partial vacuum → 120
- Information on the shock resistance of the measuring system → 119
- Information on the vibration resistance of the measuring system → 119

Vibrations

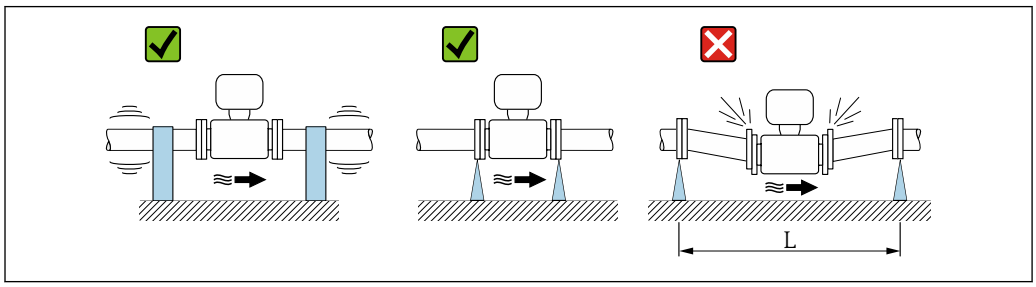

A0029004

7 *Measures to avoid device vibrations (L > 10 m (33 ft))*

In the event of very strong vibrations, the pipe and sensor must be supported and fixed.

- Information on the shock resistance of the measuring system → 119
- Information on the vibration resistance of the measuring system → 119

Adapters

Suitable adapters to DIN EN 545 (double-flange reducers) can be used to install the sensor in larger-diameter pipes. The resultant increase in the rate of flow improves measuring accuracy with very slow-moving fluids. The nomogram shown here can be used to calculate the pressure loss caused by reducers and expanders.

The nomogram only applies to liquids with a viscosity similar to that of water.

1. Calculate the ratio of the diameters d/D.

2. From the nomogram read off the pressure loss as a function of flow velocity (downstream from the reduction) and the d/D ratio.

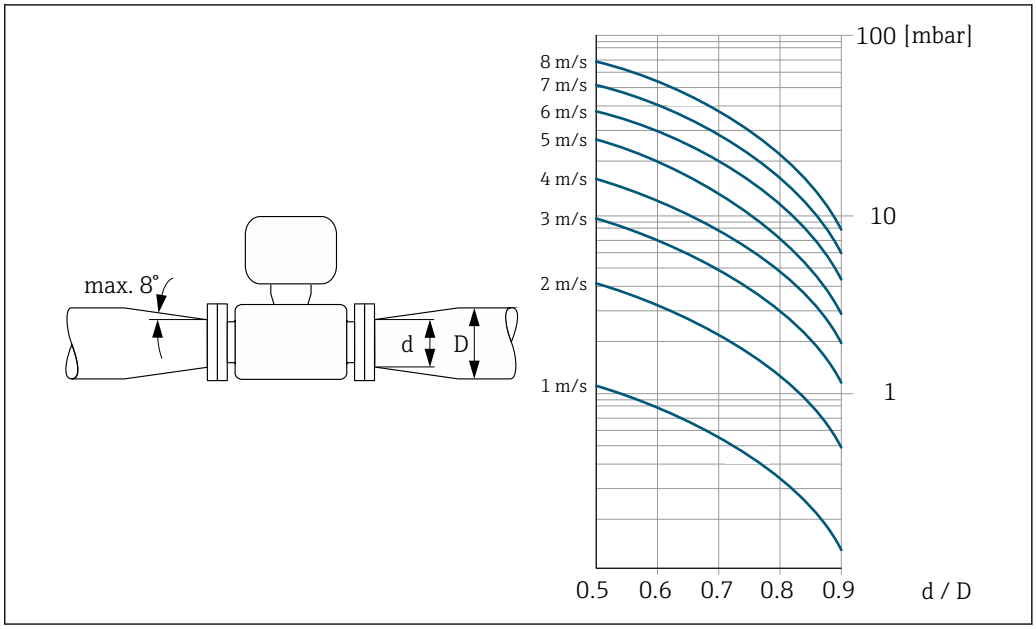

6.2 Mounting the measuring device

6.2.1 Required tools

For sensor

For flanges and other process connections: Corresponding mounting tools

6.2.2 Preparing the measuring device

1. Remove all remaining transport packaging.
2. Remove any protective covers or protective caps present from the sensor.
3. Remove stick-on label on the electronics compartment cover.

6.2.3 Mounting the sensor

⚠ WARNING

Danger due to improper process sealing!

- Ensure that the inside diameters of the gaskets are greater than or equal to that of the process connections and piping.
- Ensure that the gaskets are clean and undamaged.
- Install the gaskets correctly.

1. Ensure that the direction of the arrow on the sensor matches the flow direction of the medium.
2. To ensure compliance with device specifications, install the measuring device between the pipe flanges in a way that it is centered in the measurement section.
3. If using ground disks, comply with the Installation Instructions provided.
4. Observe required screw tightening torques → 24.

5. Install the measuring device or turn the transmitter housing so that the cable entries do not point upwards.

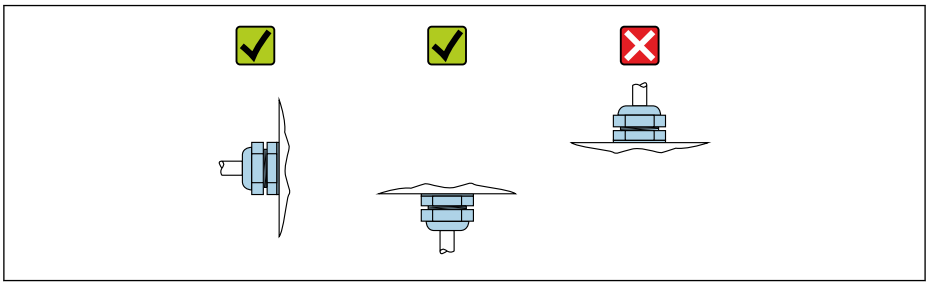

A0029263

Mounting the seals

⚠ CAUTION

An electrically conductive layer could form on the inside of the measuring tube!
Risk of measuring signal short circuit.
- ▶ Do not use electrically conductive sealing compounds such as graphite.

Comply with the following instructions when installing seals:

1. When mounting the process connections, make sure that the seals concerned are clean and centered correctly.
2. For DIN flanges: only use seals according to DIN EN 1514-1.
3. For "PFA" lining: generally additional seals are **not** required.
4. For "PTFE" lining: generally additional seals are **not** required.

Mounting the ground cable/ground disks

Comply with the information on potential equalization and detailed mounting instructions for the use of ground cables/ground disks .

Screw tightening torques

Please note the following:
- The screw tightening torques listed below apply only to lubricated threads and to pipes not subjected to tensile stress.
- Tighten the screws uniformly and in diagonally opposite sequence.
- Overtightening the screws will deform the sealing faces or damage the seals.

Screw tightening torques for EN 1092-1 (DIN 2501), PN 10/16/25/40

Nominal diameter	Pressure rating	Screws	Flange thickness	Max. screw tightening torque [Nm]	
[mm]	[bar]	[mm]	[mm]	PTFE	PFA
15	PN 40	4 × M12	16	11	–
25	PN 40	4 × M12	18	26	20
32	PN 40	4 × M16	18	41	35
40	PN 40	4 × M16	18	52	47
50	PN 40	4 × M16	20	65	59
65 [1)]	PN 16	8 × M16	18	43	40
65	PN 40	8 × M16	22	43	40
80	PN 16	8 × M16	20	53	48
80	PN 40	8 × M16	24	53	48
100	PN 16	8 × M16	20	57	51

Nominal diameter [mm]	Pressure rating [bar]	Screws [mm]	Flange thickness [mm]	Max. screw tightening torque [Nm]	
				PTFE	PFA
100	PN 40	8 × M20	24	78	70
125	PN 16	8 × M16	22	75	67
125	PN 40	8 × M24	26	111	99
150	PN 16	8 × M20	22	99	85
150	PN 40	8 × M24	28	136	120
200	PN 10	8 × M20	24	141	101
200	PN 16	12 × M20	24	94	67
200	PN 25	12 × M24	30	138	105
250	PN 10	12 × M20	26	110	–
250	PN 16	12 × M24	26	131	–
250	PN 25	12 × M27	32	200	–
300	PN 10	12 × M20	26	125	–
300	PN 16	12 × M24	28	179	–
300	PN 25	16 × M27	34	204	–
350	PN 10	16 × M20	26	188	–
350	PN 16	16 × M24	30	254	–
350	PN 25	16 × M30	38	380	–
400	PN 10	16 × M24	26	260	–
400	PN 16	16 × M27	32	330	–
400	PN 25	16 × M33	40	488	–
450	PN 10	20 × M24	28	235	–
450	PN 16	20 × M27	40	300	–
450	PN 25	20 × M33	46	385	–
500	PN 10	20 × M24	28	265	–
500	PN 16	20 × M30	34	448	–
500	PN 25	20 × M33	48	533	–
600	PN 10	20 × M27	28	345	–
600 [1)]	PN 16	20 × M33	36	658	–
600	PN 25	20 × M36	58	731	–

1) Designed acc. to EN 1092-1 (not to DIN 2501)

Screw tightening torques for EN 1092-1 (DIN 2501), PN 10/16/25, P245GH/stainless; calculated according to EN 1591-1:2014 for flanges as per EN 1092-1:2013

Nominal diameter [mm]	Pressure rating [bar]	Screws [mm]	Flange thickness [mm]	Nom. screw tightening torque [Nm] PTFE
350	PN 10	16 × M20	26	60
350	PN 16	16 × M24	30	115
350	PN 25	16 × M30	38	220
400	PN 10	16 × M24	26	90
400	PN 16	16 × M27	32	155

Nominal diameter [mm]	Pressure rating [bar]	Screws [mm]	Flange thickness [mm]	Nom. screw tightening torque [Nm] PTFE
400	PN 25	16 × M33	40	290
450	PN 10	20 × M24	28	90
450	PN 16	20 × M27	34	155
450	PN 25	20 × M33	46	290
500	PN 10	20 × M24	28	100
500	PN 16	20 × M30	36	205
500	PN 25	20 × M33	48	345
600	PN 10	20 × M27	30	150
600	PN 16	20 × M33	40	310
600	PN 25	20 × M36	48	500

Screw tightening torques for ASME B16.5, Class 150/300

Nominal diameter		Pressure rating	Screws	Max. screw tightening torque [Nm] ([lbf · ft])	
[mm]	[in]	[psi]	[in]	PTFE	PFA
15	½	Class 150	4 × ½	6 (4)	– (–)
15	½	Class 300	4 × ½	6 (4)	– (–)
25	1	Class 150	4 × ½	11 (8)	10 (7)
25	1	Class 300	4 × 5/8	14 (10)	12 (9)
40	1 ½	Class 150	4 × ½	24 (18)	21 (15)
40	1 ½	Class 300	4 × ¾	34 (25)	31 (23)
50	2	Class 150	4 × 5/8	47 (35)	44 (32)
50	2	Class 300	8 × 5/8	23 (17)	22 (16)
80	3	Class 150	4 × 5/8	79 (58)	67 (49)
80	3	Class 300	8 × ¾	47 (35)	42 (31)
100	4	Class 150	8 × 5/8	56 (41)	50 (37)
100	4	Class 300	8 × ¾	67 (49)	59 (44)
150	6	Class 150	8 × ¾	106 (78)	86 (63)
150	6	Class 300	12 × ¾	73 (54)	67 (49)
200	8	Class 150	8 × ¾	143 (105)	109 (80)
250	10	Class 150	12 × 7/8	135 (100)	– (–)
300	12	Class 150	12 × 7/8	178 (131)	– (–)
350	14	Class 150	12 × 1	260 (192)	– (–)
400	16	Class 150	16 × 1	246 (181)	– (–)
450	18	Class 150	16 × 1 1/8	371 (274)	– (–)
500	20	Class 150	20 × 1 1/8	341 (252)	– (–)
600	24	Class 150	20 × 1 ¼	477 (352)	– (–)

Screw tightening torques for JIS B2220, 10/20K

Nominal diameter [mm]	Pressure rating [bar]	Screws [mm]	Max. screw tightening torque [Nm]	
			PTFE	PFA
25	10K	4 × M16	32	27
25	20K	4 × M16	32	27
32	10K	4 × M16	38	–
32	20K	4 × M16	38	–
40	10K	4 × M16	41	37
40	20K	4 × M16	41	37
50	10K	4 × M16	54	46
50	20K	8 × M16	27	23
65	10K	4 × M16	74	63
65	20K	8 × M16	37	31
80	10K	8 × M16	38	32
80	20K	8 × M20	57	46
100	10K	8 × M16	47	38
100	20K	8 × M20	75	58
125	10K	8 × M20	80	66
125	20K	8 × M22	121	103
150	10K	8 × M20	99	81
150	20K	12 × M22	108	72
200	10K	12 × M20	82	54
200	20K	12 × M22	121	88
250	10K	12 × M22	133	–
250	20K	12 × M24	212	–
300	10K	16 × M22	99	–
300	20K	16 × M24	183	–

Screw tightening torques for JIS B2220, 10/20K

Nominal diameter [mm]	Pressure rating [bar]	Screws [mm]	Nom. screw tightening torque [Nm]	
			PUR	HG
350	10K	16 × M22	109	109
350	20K	16 × M30×3	217	217
400	10K	16 × M24	163	163
400	20K	16 × M30×3	258	258
450	10K	16 × M24	155	155
450	20K	16 × M30×3	272	272
500	10K	16 × M24	183	183
500	20K	16 × M30×3	315	315
600	10K	16 × M30	235	235
600	20K	16 × M36×3	381	381
700	10K	16 × M30	300	300
750	10K	16 × M30	339	339

Screw tightening torques for AS 2129, Table E

Nominal diameter [mm]	Screws [mm]	Max. screw tightening torque [Nm] PTFE
25	4 × M12	21
50	4 × M16	42

Screw tightening torques for AS 4087, PN 16

Nominal diameter [mm]	Screws [mm]	Max. screw tightening torque [Nm] PTFE
50	4 × M16	42

6.2.4 Turning the display module

The local display is only available with the following device version:
Order code for "Display; Operation", option **B**: 4-line; lit, via communication

The display module can be turned to optimize display readability.

Aluminum housing version, AlSi10Mg, coated

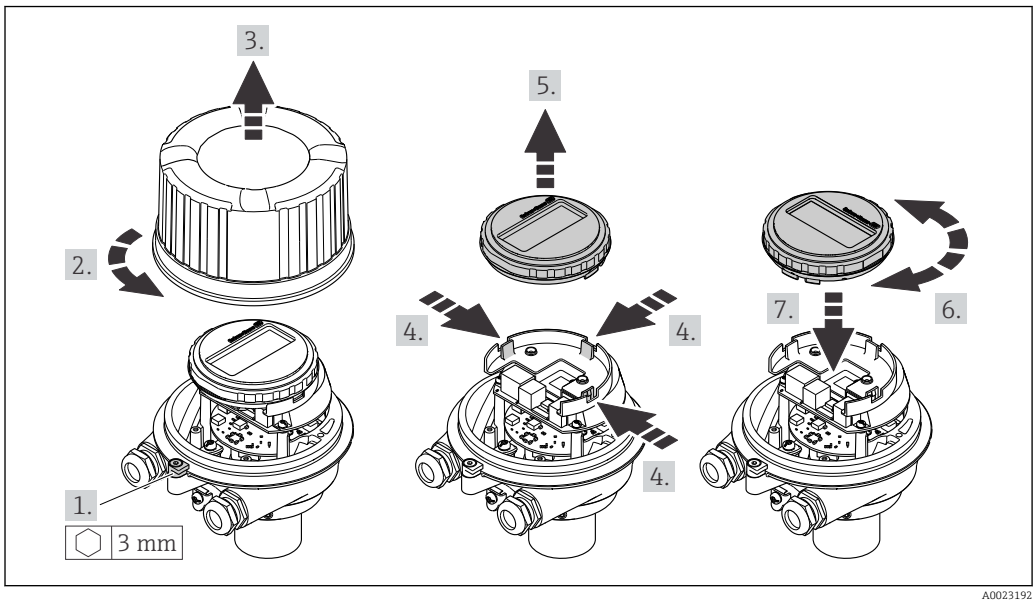

A0023192

6.3 Post-installation check

Is the device undamaged (visual inspection)?	❑
Does the measuring device conform to the measuring point specifications? For example: ▪ Process temperature ▪ Process pressure (refer to the section on "Pressure-temperature ratings" in the "Technical Information" document) ▪ Ambient temperature ▪ Measuring range	❑

Has the correct orientation for the sensor been selected ? ▪ According to sensor type ▪ According to medium temperature ▪ According to medium properties (outgassing, with entrained solids)	❑
Does the arrow on the sensor nameplate match the direction of flow of the fluid through the piping ?	❑
Are the measuring point identification and labeling correct (visual inspection)?	❑
Is the device adequately protected from precipitation and direct sunlight?	❑
Have the fixing screws been tightened with the correct tightening torque?	❑

7 Electrical connection

NOTICE

The measuring device does not have an internal circuit breaker.

- ▶ For this reason, assign the measuring device a switch or power-circuit breaker so that the power supply line can be easily disconnected from the mains.
- ▶ Although the measuring device is equipped with a fuse, additional overcurrent protection (maximum 16 A) should be integrated into the system installation.

7.1 Connection conditions

7.1.1 Required tools

- For cable entries: Use corresponding tools
- For securing clamp (on aluminum housing): Allen screw3 mm
- For securing screw (for stainless steel housing): open-ended wrench 8 mm
- Wire stripper
- When using stranded cables: crimper for wire end ferrule

7.1.2 Requirements for connecting cable

The connecting cables provided by the customer must fulfill the following requirements.

Electrical safety

In accordance with applicable federal/national regulations.

Permitted temperature range

- The installation guidelines that apply in the country of installation must be observed.
- The cables must be suitable for the minimum and maximum temperatures to be expected.

Power supply cable

Standard installation cable is sufficient.

Signal cable

PROFINET

Standard IEC 61156-6 specifies CAT 5 as the minimum category for a cable used for PROFINET. CAT 5e and CAT 6 are recommended.

For more information on planning and installing PROFINET networks, see: "PROFINET Cabling and Interconnection Technology", Guideline for PROFINET

Cable diameter

- Cable glands supplied:
  M20 × 1.5 with cable Ø 6 to 12 mm (0.24 to 0.47 in)
- Spring terminals:
  Wire cross-sections 0.5 to 2.5 mm^2 (20 to 14 AWG)

7.1.3 Terminal assignment

Transmitter

PROFINET connection version

Order code for "Output", option **R**

Depending on the housing version, the transmitters can be ordered with terminals or device plugs.

Order code for "Housing"	Connection methods available		Possible options for order code "Electrical connection"
	Output	Power supply	
Option **A**	Device plugs → 31	Terminals	▪ Option **L**: plug M12x1 + thread NPT ½" ▪ Option **N**: plug M12x1 + coupling M20 ▪ Option **P**: plug M12x1 + thread G ½" ▪ Option **U**: plug M12x1 + thread M20
Option **A**	Device plugs → 31	Device plugs → 31	Option **Q**: 2 x plug M12x1
Order code for "Housing": Option **A**: compact, coated aluminum			

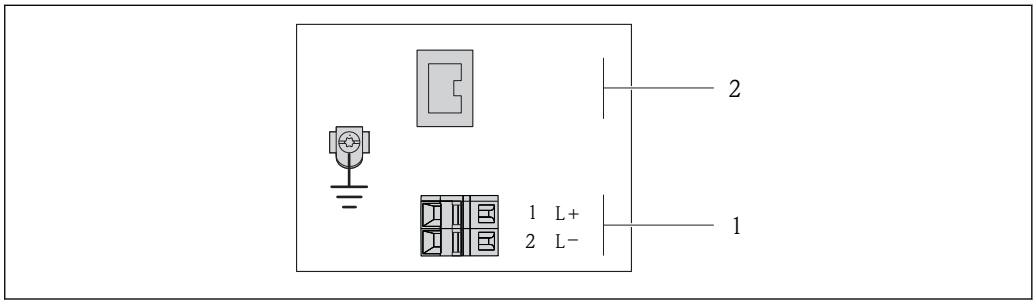

8 PROFINET terminal assignment

1 Power supply: DC 24 V
2 PROFINET

Order code for "Output"	Terminal number		
	Power supply		Output
	2 (L-)	1 (L+)	Device plug M12x1
Option **R**	DC 24 V		PROFINET
Order code for "Output": Option **R**: PROFINET			

7.1.4 Pin assignment, device plug

Supply voltage

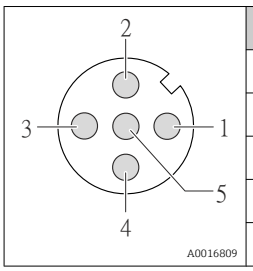

Pin	Assignment	
1	L+	DC 24 V
2		Not assigned
3		Not assigned
4	L-	DC 24 V
5		Grounding/shielding

	Coding	Plug/socket
	A	Plug

Device plug for signal transmission (device side)

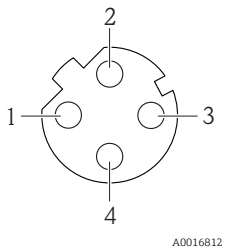

Pin		Assignment
1	+	TD +
2	+	RD +
3	-	TD –
4	-	RD –
Coding		**Plug/socket**
D		Socket

7.1.5 Preparing the measuring device

NOTICE

Insufficient sealing of the housing!

Operational reliability of the measuring device could be compromised.

- Use suitable cable glands corresponding to the degree of protection.

1. Remove dummy plug if present.
2. If the measuring device is supplied without cable glands:
   Provide suitable cable gland for corresponding connecting cable.
3. If the measuring device is supplied with cable glands:
   Observe requirements for connecting cables → 30.

7.2 Connecting the measuring device

NOTICE

Limitation of electrical safety due to incorrect connection!

- Have electrical connection work carried out by appropriately trained specialists only.
- Observe applicable federal/national installation codes and regulations.
- Comply with local workplace safety regulations.
- Always connect the protective ground cable ⏚ before connecting additional cables.
- For use in potentially explosive atmospheres, observe the information in the device-specific Ex documentation.
- The power unit must be tested to ensure it meets safety requirements (e.g. PELV, SELV).

7.2.1 Connecting the transmitter

The connection of the transmitter depends on the following order codes:

- Housing version: compact or ultra-compact
- Connection version: device plug or terminals

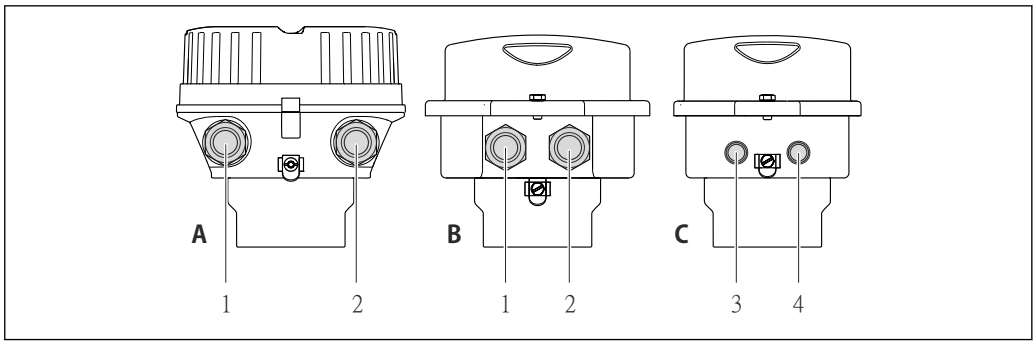

9 *Housing versions and connection versions*

A Compact, coated aluminum
B Compact hygienic, stainless or compact, stainless
1 Cable entry or device plug for signal transmission
2 Cable entry or device plug for supply voltage
C Ultra-compact hygienic, stainless or ultra-compact, stainless
3 Device plug for signal transmission
4 Device plug for supply voltage

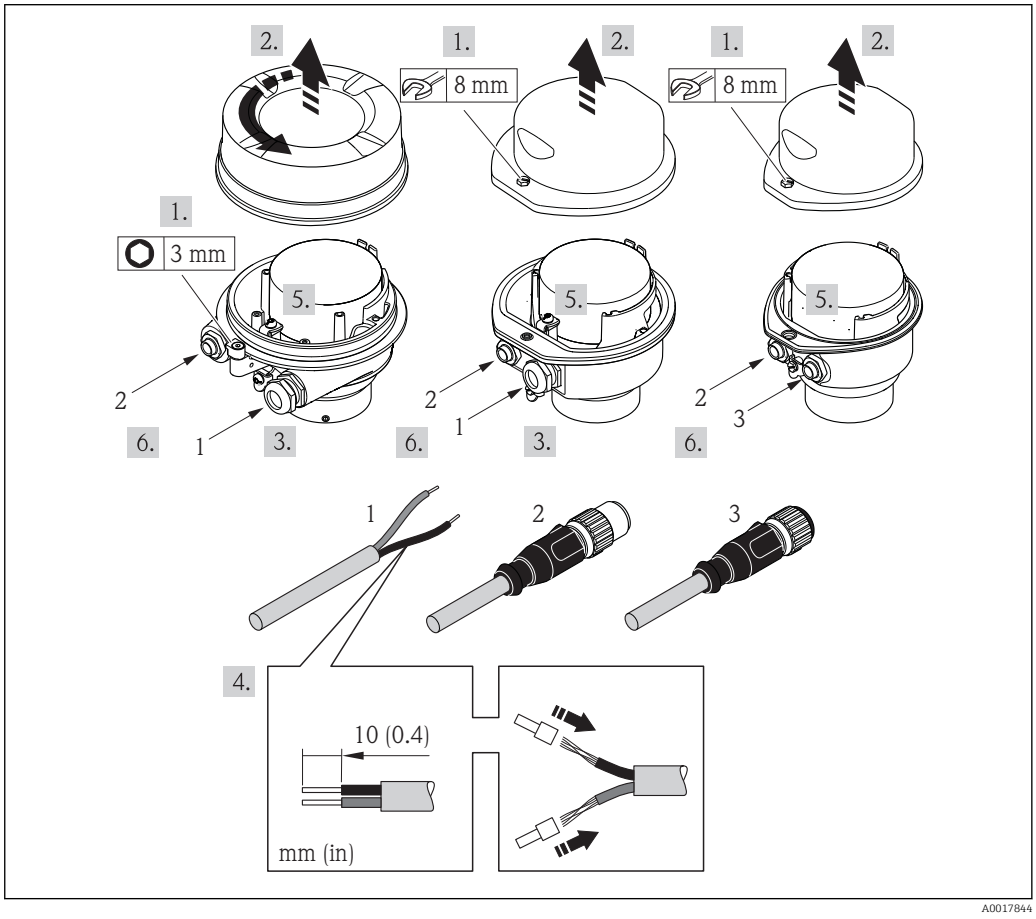

10 *Device versions with connection examples*

1 Cable
2 Device plug for signal transmission
3 Device plug for supply voltage

Depending on the housing version disconnect the local display from the main electronics module: Operating Instructions for the device .

- Connect the cable in accordance with the terminal assignment or the device plug pin assignment .

7.2.2 Ensure potential equalization

Requirements

CAUTION

Electrode damage can result in the complete failure of the device!

- Same electrical potential for the medium and sensor
- Company-internal grounding concepts
- Pipe material and grounding

For devices intended for use in hazardous locations, please observe the guidelines in the Ex documentation (XA).

Connection example, standard scenario

Metal, grounded pipe

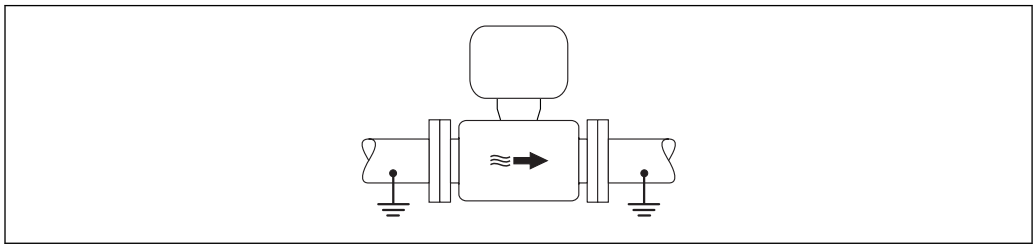

A0016315

11 *Potential equalization via measuring tube*

Connection example in special situations

Unlined and ungrounded metal pipe

This connection method also applies in situations where:
- The customary potential equalization is not used
- Equalizing currents are present

Ground cable	Copper wire, at least 6 mm² (0.0093 in²)

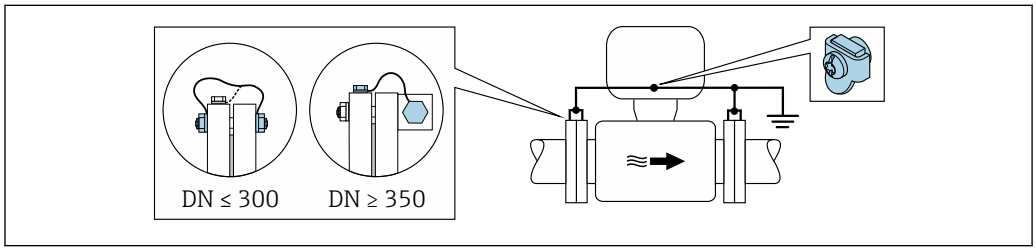

A0029338

12 *Potential equalization via ground terminal and pipe flanges*

1. Connect both sensor flanges to the pipe flange via a ground cable and ground them.
2. If DN ≤ 300 (12"): Mount the ground cable directly on the conductive flange coating of the sensor with the flange screws.
3. If DN ≥ 350 (14"): Mount the ground cable directly on the metal transport bracket. Observe screw tightening torques: see the Sensor Brief Operating Instructions.
4. Connect the connection housing of the transmitter or sensor to ground potential by means of the ground terminal provided for the purpose.

Plastic pipe or pipe with insulating liner

This connection method also applies in situations where:
- The customary potential equalization is not used
- Equalizing currents are present

Ground cable	Copper wire, at least 6 mm² (0.0093 in²)

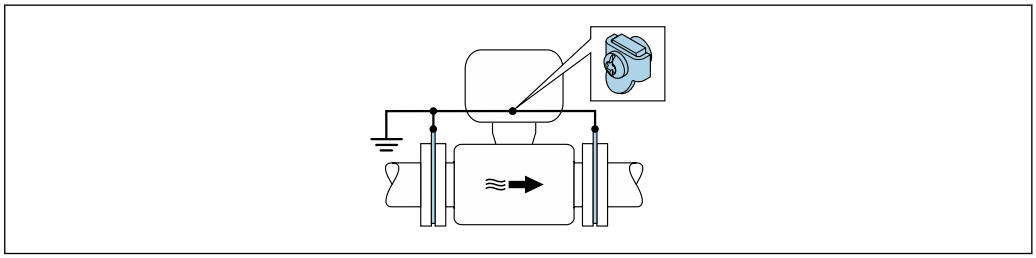

13 *Potential equalization via ground terminal and ground disks*

1. Connect the ground disks to the ground terminal via the ground cable.
2. Connect the ground disks to ground potential.

Pipe with a cathodic protection unit

This connection method is only used if the following two conditions are met:
- Metal pipe without liner or pipe with electrically conductive liner
- Cathodic protection is integrated in the personal protection equipment

Ground cable	Copper wire, at least 6 mm² (0.0093 in²)

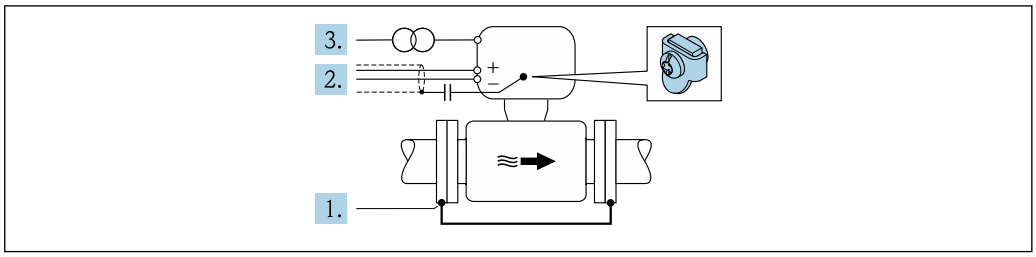

Prerequisite: The sensor is installed in the pipe in a way that provides electrical insulation.

1. Connect the two flanges of the pipe to one another via a ground cable.
2. Guide the shield of the signal lines through a capacitor.
3. Connect the measuring device to the power supply such that it is floating in relation to the protective ground (isolation transformer).

7.3 Special connection instructions

7.3.1 Connection examples

PROFINET

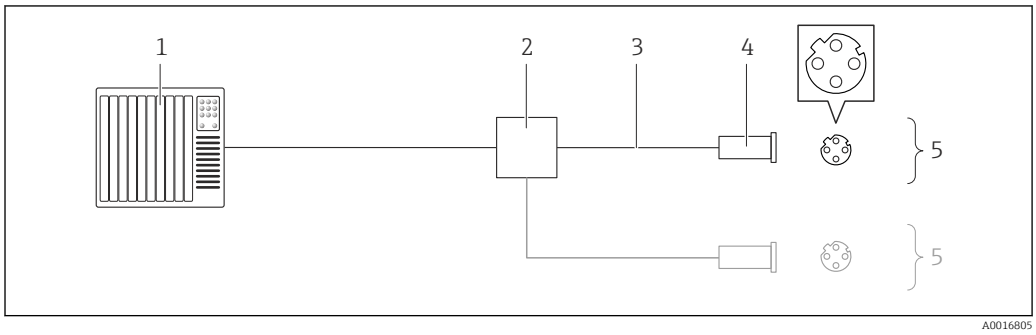

14 Connection example for PROFINET

1 Control system (e.g. PLC)
2 Ethernet switch
3 Observe cable specifications
4 Device plug
5 Transmitter

7.4 Hardware settings

7.4.1 Setting the device name

A measuring point can be quickly identified within a plant on the basis of the tag name. The tag name is equivalent to the device name (name of station of the PROFINET specification). The factory-assigned device name can be changed using the DIP switches or the automation system.

Example of device name (factory setting): EH-Promag100-XXXXX

EH	Endress+Hauser
Promag	Instrument family
100	Transmitter
XXXXX	Serial number of the device

The device name currently used is displayed in Setup → Name of station .

Setting the device name using the DIP switches

The last part of the device name can be set using DIP switches 1-8. The address range is between 1 and 254 (factory setting: serial number of the device)

Overview of the DIP switches

DIP switches	Bit	Description
1	1	Configurable part of the device name
2	2	
3	4	
4	8	
5	16	

DIP switches	Bit	Description
6	32	
7	64	
8	128	
9	–	Enable hardware write protection
10	–	Default IP address: use 192.168.1.212

Example: set the device name EH-PROMAG100-065

DIP switches	ON/OFF	Bit
1	ON	1
2...6	OFF	–
7	ON	64
8	OFF	–

Setting the device name

Risk of electric shock when opening the transmitter housing.
▶ Disconnect the device from the power supply before opening the transmitter housing.

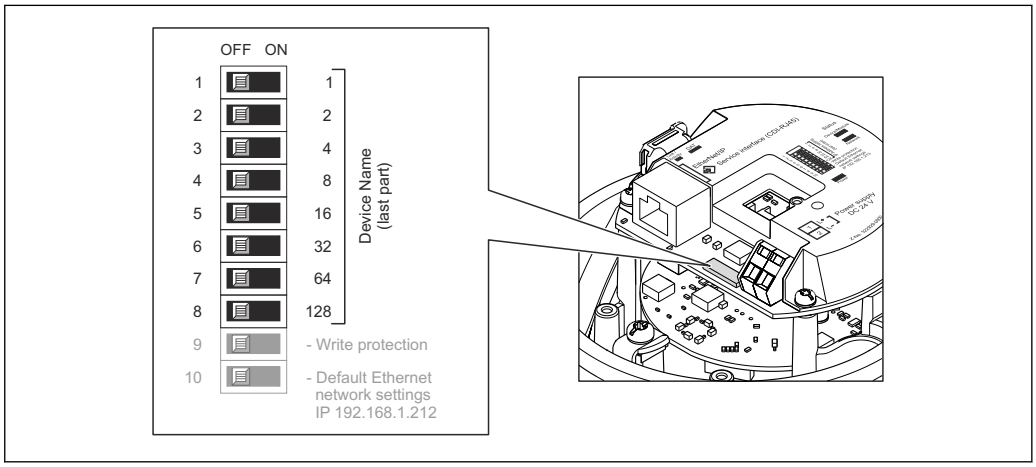

1. Depending on the housing version, loosen the securing clamp or fixing screw of the housing cover.
2. Depending on the housing version, unscrew or open the housing cover and disconnect the local display from the main electronics module where necessary → 🗎 126.
3. Set the desired device name using the corresponding DIP switches on the I/O electronics module.
4. Reverse the removal procedure to reassemble the transmitter.
5. Reconnect the device to the power supply. The configured device address is used once the device is restarted.

If the device is reset via the PROFINET interface, it is not possible to reset the device name to the factory setting. The value 0 is used instead of the device name.

Setting the device name via the automation system

DIP switches 1-8 must all be set to **OFF** (factory setting) or all be set to **ON** to be able to set the device name via the automation system.

The complete device name (name of station) can be changed individually via the automation system.

- The serial number used as part of the device name in the factory setting is not saved. It is not possible to reset the device name to the factory setting with the serial number. The value 0 is used instead of the serial number.
- When assigning the device name via the automation system, enter the device name in lower-case letters.

7.5 Ensuring the degree of protection

The measuring device fulfills all the requirements for the IP66/67 degree of protection, Type 4X enclosure.

To guarantee IP66/67 degree of protection, Type 4X enclosure, carry out the following steps after the electrical connection:

1. Check that the housing seals are clean and fitted correctly.
2. Dry, clean or replace the seals if necessary.
3. Tighten all housing screws and screw covers.
4. Firmly tighten the cable glands.
5. To ensure that moisture does not enter the cable entry:
   Route the cable so that it loops down before the cable entry ("water trap").
   ↳
   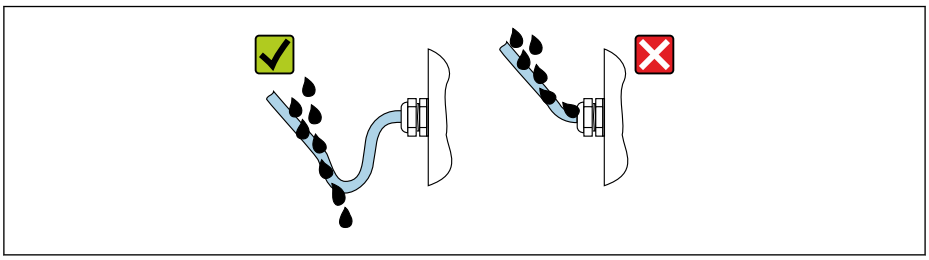
   A0029278
6. Insert dummy plugs into unused cable entries.

7.6 Post-connection check

Are cables or the device undamaged (visual inspection)?	❑
Do the cables used meet the requirements→ 🗎 30?	❑
Do the cables have adequate strain relief?	❑
Are all the cable glands installed, firmly tightened and leak-tight? Cable run with "water trap" → 🗎 38 ?	❑
Depending on the device version: are all the device plugs firmly tightened ?	❑
Does the supply voltage match the specifications on the transmitter nameplate → 🗎 116?	❑
Is the terminal assignment → 🗎 31 or pin assignment of the connector → 🗎 31 correct?	❑
If supply voltage is present, is the power LED on the electronics module of the transmitter lit green → 🗎 12?	❑
Is the potential equalization established correctly ?	❑
Depending on the device version, is the securing clamp or fixing screw firmly tightened?	❑

8 Operation options

8.1 Overview of operating options

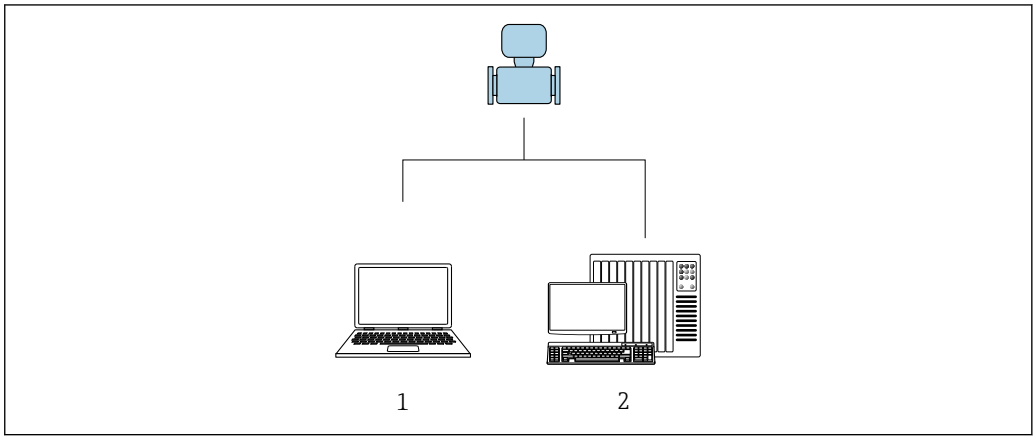

1 Computer with Web browser (e.g. Internet Explorer) or with "FieldCare" operating tool
2 Automation system, e.g. Siemens S7-300 or S7-1500 with Step7 or TIA portal and latest GSD file.

8.2 Structure and function of the operating menu

8.2.1 Structure of the operating menu

For an overview of the operating menu for experts: "Description of Device Parameters" document supplied with the device→ 130

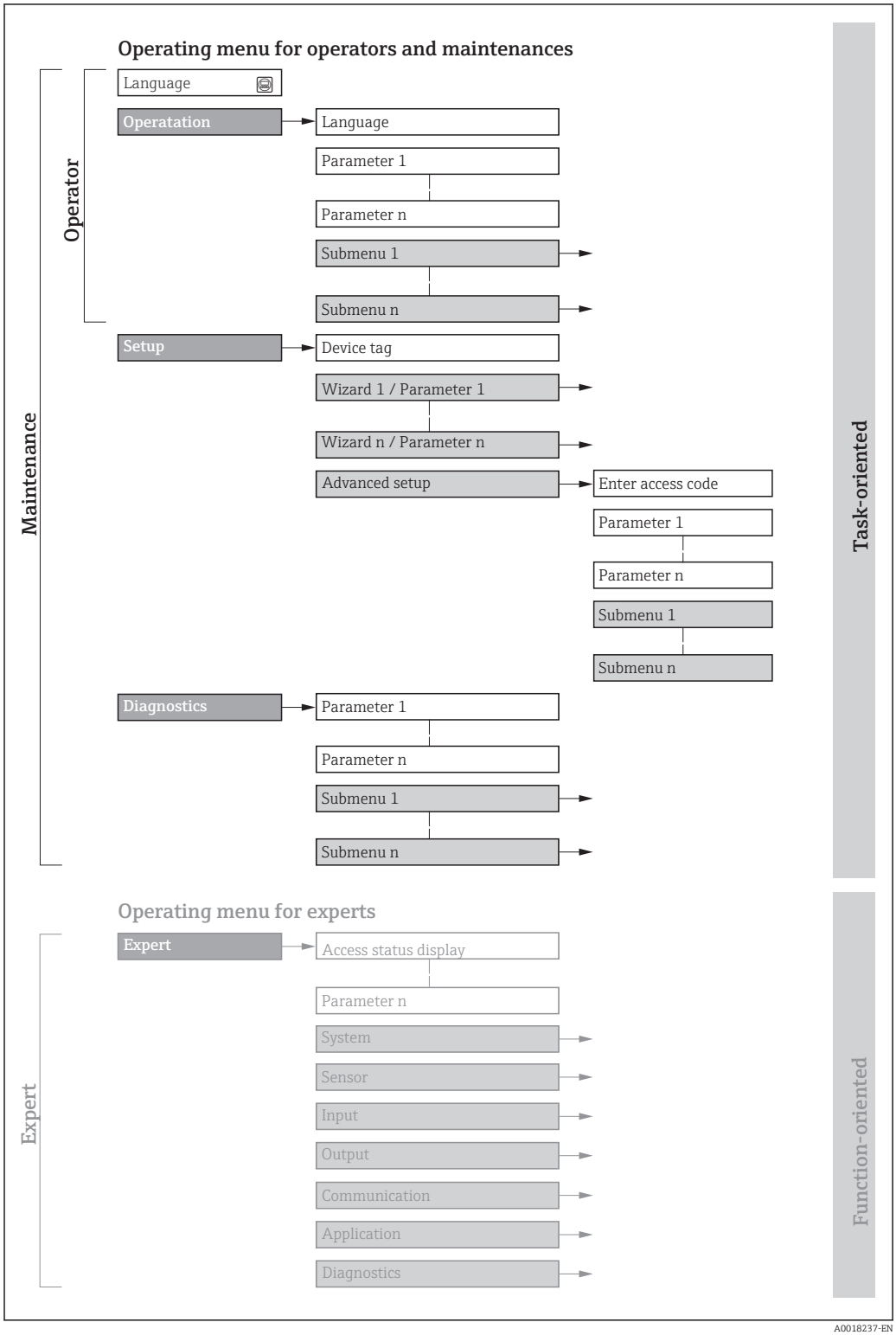

15 *Schematic structure of the operating menu*

8.2.2 Operating philosophy

The individual parts of the operating menu are assigned to certain user roles (operator, maintenance etc.). Each user role contains typical tasks within the device lifecycle.

Menu/parameter		User role and tasks	Content/meaning
Language	task-oriented	**Role "Operator", "Maintenance"** Tasks during operation: ▪ Configuring the operational display ▪ Reading measured values	▪ Defining the operating language ▪ Defining the Web server operating language ▪ Resetting and controlling totalizers
Operation			▪ Configuring the operational display (e.g. display format, display contrast) ▪ Resetting and controlling totalizers
Setup		**"Maintenance" role** Commissioning: Configuration of the measurement	Submenus for fast commissioning: ▪ Set the system units ▪ Configuring the operational display ▪ Set the low flow cut off ▪ Empty pipe detection Advanced setup ▪ For more customized configuration of the measurement (adaptation to special measuring conditions) ▪ Configuration of totalizers ▪ Configuration of electrode cleaning (optional) ▪ Configure the WLAN settings ▪ Administration (define access code, reset measuring device)
Diagnostics		**"Maintenance" role** Fault elimination: ▪ Diagnostics and elimination of process and device errors ▪ Measured value simulation	Contains all parameters for error detection and analyzing process and device errors: ▪ Diagnostic list Contains up to 5 currently pending diagnostic messages. ▪ Event logbook Contains event messages that have occurred. ▪ Device information Contains information for identifying the device. ▪ Measured values Contains all current measured values. ▪ Heartbeat The functionality of the device is checked on demand and the verification results are documented. ▪ Simulation Is used to simulate measured values or output values.
Expert	function-oriented	Tasks that require detailed knowledge of the function of the device: ▪ Commissioning measurements under difficult conditions ▪ Optimal adaptation of the measurement to difficult conditions ▪ Detailed configuration of the communication interface ▪ Error diagnostics in difficult cases	Contains all the parameters of the device and makes it possible to access these parameters directly using an access code. The structure of this menu is based on the function blocks of the device: ▪ System Contains all higher-order device parameters which do not concern the measurement or the communication interface. ▪ Sensor Configuration of the measurement. ▪ Communication Configuration of the digital communication interface and the Web server. ▪ Application Configure the functions that go beyond the actual measurement (e.g. totalizer). ▪ Diagnostics Error detection and analysis of process and device errors and for device simulation and Heartbeat Technology.

8.3 Access to the operating menu via the web browser

8.3.1 Function range

Thanks to the integrated Web server, the device can be operated and configured via a Web browser and via a service interface (CDI-RJ45) . In addition to the measured values, status information on the device is also displayed and allows the user to monitor the status of the

device. Furthermore the device data can be managed and the network parameters can be configured.

For additional information on the Web server, refer to the Special Documentation for the device → 📄 131

8.3.2 Prerequisites

Computer hardware

Interface	The computer must have an RJ45 interface.
Connection	Standard Ethernet cable with RJ45 connector.
Screen	Recommended size: ≥12" (depends on the screen resolution)

Computer software

Recommended operating systems	Microsoft Windows 7 or higher. Microsoft Windows XP is supported.
Web browsers supported	▪ Microsoft Internet Explorer 8 or higher ▪ Microsoft Edge ▪ Mozilla Firefox ▪ Google Chrome ▪ Safari

Computer settings

User rights	Appropriate user rights (e.g. administrator rights) for TCP/IP and proxy server settings are necessary (for adjusting the IP address, subnet mask etc.).
Proxy server settings of the Web browser	The Web browser setting *Use a Proxy Server for Your LAN* must be **deselected** .
JavaScript	JavaScript must be enabled. If JavaScript cannot be enabled: enter http://XXX.XXX.X.XXX/basic.html in the address line of the Web browser, e.g. http://192.168.1.212/basic.html. A fully functional but simplified version of the operating menu structure starts in the Web browser.
Network connections	Only the active network connections to the measuring device should be used.
	Switch off all other network connections such as WLAN.

In the event of connection problems: → 📄 79

Measuring device: Via CDI-RJ45 service interface

Device	CDI-RJ45 service interface
Measuring device	The measuring device has an RJ45 interface.
Web server	Web server must be enabled; factory setting: ON For information on enabling the Web server → 📄 46

8.3.3 Establishing a connection

Via service interface (CDI-RJ45)

Preparing the measuring device

Configuring the Internet protocol of the computer

The IP address can be assigned to the measuring device in a variety of ways:
- Dynamic Configuration Protocol (DCP), factory setting:
  The IP address is automatically assigned to the measuring device by the automation system (e.g. Siemens S7).
- Hardware addressing:
  The IP address is set via DIP switches .
- Software addressing:
  The IP address is entered via the **IP address** parameter (→ 🗎 62) .
- DIP switch for "Default IP address":
  To establish the network connection via the service interface (CDI-RJ45): the fixed IP address 192.168.1.212 is used .

The measuring device works with the Dynamic Configuration Protocol (DCP), on leaving the factory, i.e. the IP address of the measuring device is automatically assigned by the automation system (e.g. Siemens S7).

To establish a network connection via the service interface (CDI-RJ45): the "Default IP address" DIP switch must be set to **ON**. The measuring device then has the fixed IP address: 192.168.1.212. This address can now be used to establish the network connection.

1. Via DIP switch 2, activate the default IP address 192.168.1.212: .
2. Switch on the measuring device.
3. Connect to the computer using a cable → 🗎 127.
4. If a 2nd network card is not used, close all the applications on the notebook.
   ↳ Applications requiring Internet or a network, such as e-mail, SAP applications, Internet or Windows Explorer.
5. Close any open Internet browsers.
6. Configure the properties of the Internet protocol (TCP/IP) as defined in the table:

IP address	192.168.1.XXX; for XXX all numerical sequences except: 0, 212 and 255 → e.g. 192.168.1.213
Subnet mask	255.255.255.0
Default gateway	192.168.1.212 or leave cells empty

Starting the Web browser

1. Start the Web browser on the computer.

2. Enter the IP address of the Web server in the address line of the Web browser: 192.168.1.212
   ↳ The login page appears.

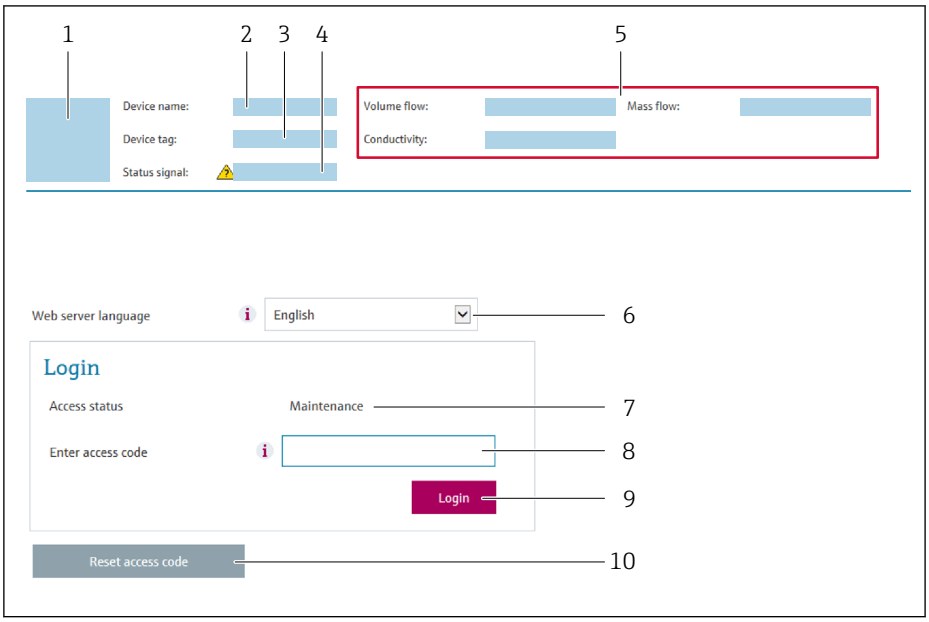

A0029417

1 *Picture of device*
2 *Device name*
3 *Device tag*
4 *Status signal*
5 *Current measured values*
6 *Operating language*
7 *User role*
8 *Access code*
9 *Login*
10 *Reset access code*

If a login page does not appear, or if the page is incomplete → 📄 79

8.3.4 Logging on

1. Select the preferred operating language for the Web browser.
2. Enter the user-specific access code.
3. Press **OK** to confirm your entry.

Access code	0000 (factory setting); can be changed by customer

If no action is performed for 10 minutes, the Web browser automatically returns to the login page.

8.3.5 User interface

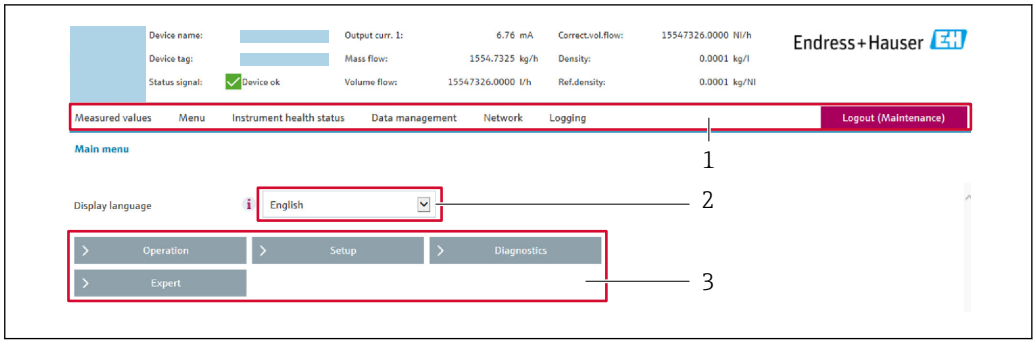

1 Function row
2 Local display language
3 Navigation area

Header

The following information appears in the header:
- Device tag
- Device status with status signal → 📄 82
- Current measured values

Function row

Functions	Meaning
Measured values	Displays the measured values of the measuring device
Menu	▪ Access to the operating menu from the measuring device ▪ The structure of the operating menu is the same as for the operating tools For detailed information on the structure of the operating menu, see the Operating Instructions for the measuring device
Device status	Displays the diagnostic messages currently pending, listed in order of priority
Data management	Data exchange between PC and measuring device: ▪ Device configuration: – Load settings from the device (XML format, save configuration) – Save settings to the device (XML format, restore configuration) ▪ Logbook - Export Event logbook (.csv file) ▪ Documents - Export documents: – Export backup data record (.csv file, create documentation of the measuring point configuration) – Verification report (PDF file, only available with the "Heartbeat Verification" application package) ▪ File for system integration - If using fieldbuses, upload device drivers for system integration from the measuring device: PROFINET: GSD file
Network configuration	Configuration and checking of all the parameters required for establishing the connection to the measuring device: ▪ Network settings (e.g. IP address, MAC address) ▪ Device information (e.g. serial number, firmware version)
Logout	End the operation and call up the login page

Navigation area

If a function is selected in the function bar, the submenus of the function open in the navigation area. The user can now navigate through the menu structure.

Working area

Depending on the selected function and the related submenus, various actions can be performed in this area:
- Configuring parameters
- Reading measured values
- Calling up help text
- Starting an upload/download

8.3.6 Disabling the Web server

The Web server of the measuring device can be switched on and off as required using the **Web server functionality** parameter.

Navigation

"Expert" menu → Communication → Web server

Parameter overview with brief description

Parameter	Description	Selection	Factory setting
Web server functionality	Switch the Web server on and off.	▪ Off ▪ HTML Off ▪ On	On

Function scope of the "Web server functionality" parameter

Option	Description
Off	▪ The web server is completely disabled. ▪ Port 80 is locked.
HTML Off	The HTML version of the web server is not available.
On	▪ The complete functionality of the web server is available. ▪ JavaScript is used. ▪ The password is transferred in an encrypted state. ▪ Any change to the password is also transferred in an encrypted state.

Enabling the Web server

If the Web server is disabled it can only be re-enabled with the **Web server functionality** parameter via the following operating options:
- Via Bedientool "FieldCare"
- Via "DeviceCare" operating tool

8.3.7 Logging out

Before logging out, perform a data backup via the **Data management** function (upload configuration from device) if necessary.

1. Select the **Logout** entry in the function row.
   ↳ The home page with the Login box appears.
2. Close the Web browser.
3. If no longer needed:
   Reset modified properties of the Internet protocol (TCP/IP) → 📄 43.

If communication with the Web server was established via the default IP address 192.168.1.212, DIP switch No. 10 must be reset (from **ON** → **OFF**). Afterwards, the IP address of the device is active again for network communication.

8.4 Access to the operating menu via the operating tool

8.4.1 Connecting the operating tool

Via PROFINET network

This communication interface is available in device versions with PROFINET.

Star topology

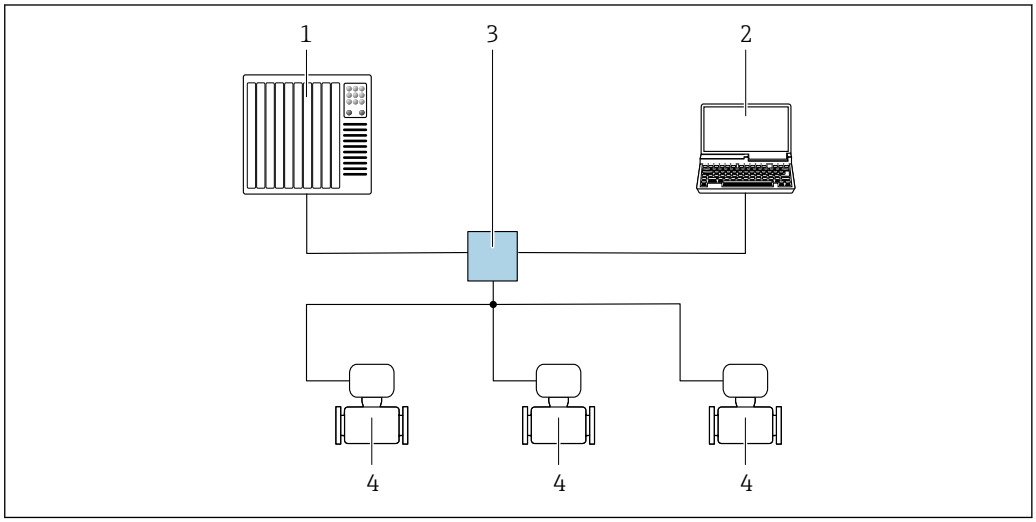

16 Options for remote operation via PROFINET network: star topology

1 *Automation system, e.g. Simatic S7 (Siemens)*
2 *Computer with Web browser (e.g. Internet Explorer) for accessing the integrated device Web server or computer with operating tool (e.g. FieldCare, DeviceCare, SIMATIC PDM) with COM DTM "CDI Communication TCP/IP"*
3 *Switch, e.g. Scalance X204 (Siemens)*
4 *Measuring device*

Via service interface (CDI)

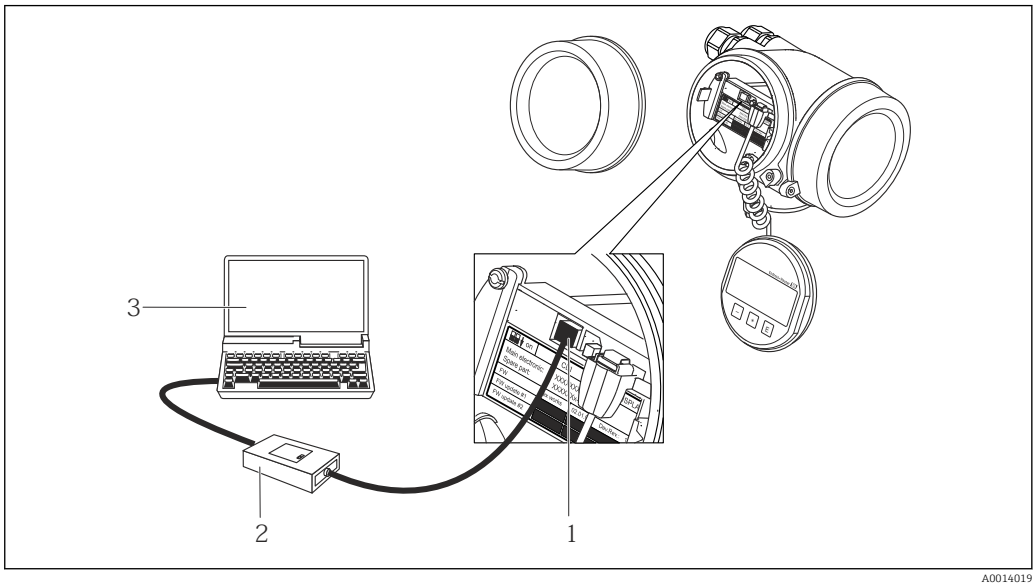

1 *Service interface (CDI = Endress+Hauser Common Data Interface) of the measuring device*
2 *Commubox FXA291*
3 *Computer with FieldCare operating tool with COM DTM CDI Communication FXA291*

Via service interface (CDI-RJ45)

PROFINET

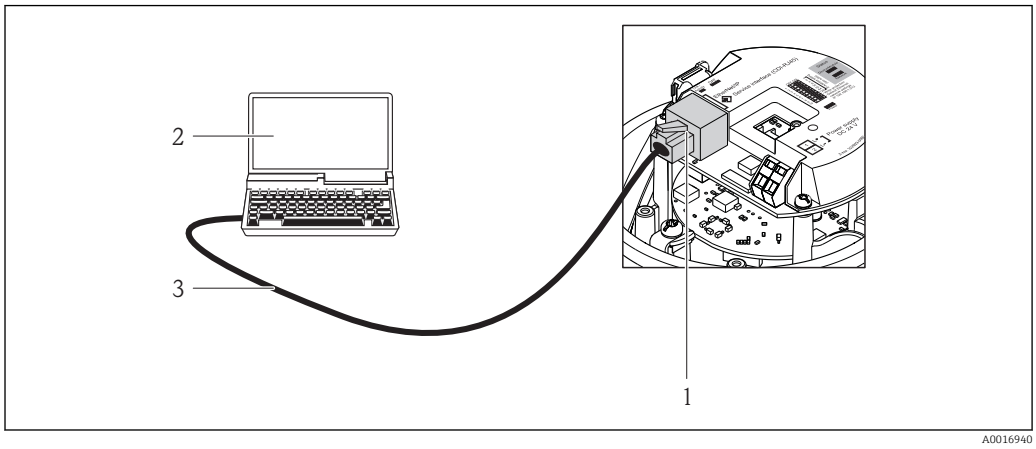

17 Connection for order code for "Output", option R: PROFINET

1 *Service interface (CDI -RJ45) and PROFINET interface of the measuring device with access to the integrated Web server*
2 *Computer with Web browser (e.g. Internet Explorer) for accessing the integrated device Web server or with "FieldCare" operating tool with COM DTM "CDI Communication TCP/IP"*
3 *Standard Ethernet connecting cable with RJ45 plug*

8.4.2 FieldCare

Function scope

FDT-based plant asset management tool from Endress+Hauser. It can configure all smart field devices in a system and helps you manage them. By using the status information, it is also a simple but effective way of checking their status and condition.

Access is via:
CDI-RJ45 service interface

Typical functions:
- Configuring parameters of transmitters
- Loading and saving device data (upload/download)
- Documentation of the measuring point
- Visualization of the measured value memory (line recorder) and event logbook

For additional information about FieldCare, see Operating Instructions BA00027S and BA00059S

Source for device description files

See information → 50

Establishing a connection

1. Start FieldCare and launch the project.
2. In the network: Add a device.
   ↳ The **Add device** window opens.
3. Select the **CDI Communication TCP/IP** option from the list and press **OK** to confirm.
4. Right-click **CDI Communication TCP/IP** and select the **Add device** option in the context menu that opens.
5. Select the desired device from the list and press **OK** to confirm.
   ↳ The **CDI Communication TCP/IP (Configuration)** window opens.

6. Enter the device address in the **IP address** field and press **Enter** to confirm: 192.168.1.212 (factory setting); if the IP address is not known .
7. Establish the online connection to the device.

For additional information, see Operating Instructions BA00027S and BA00059S

User interface

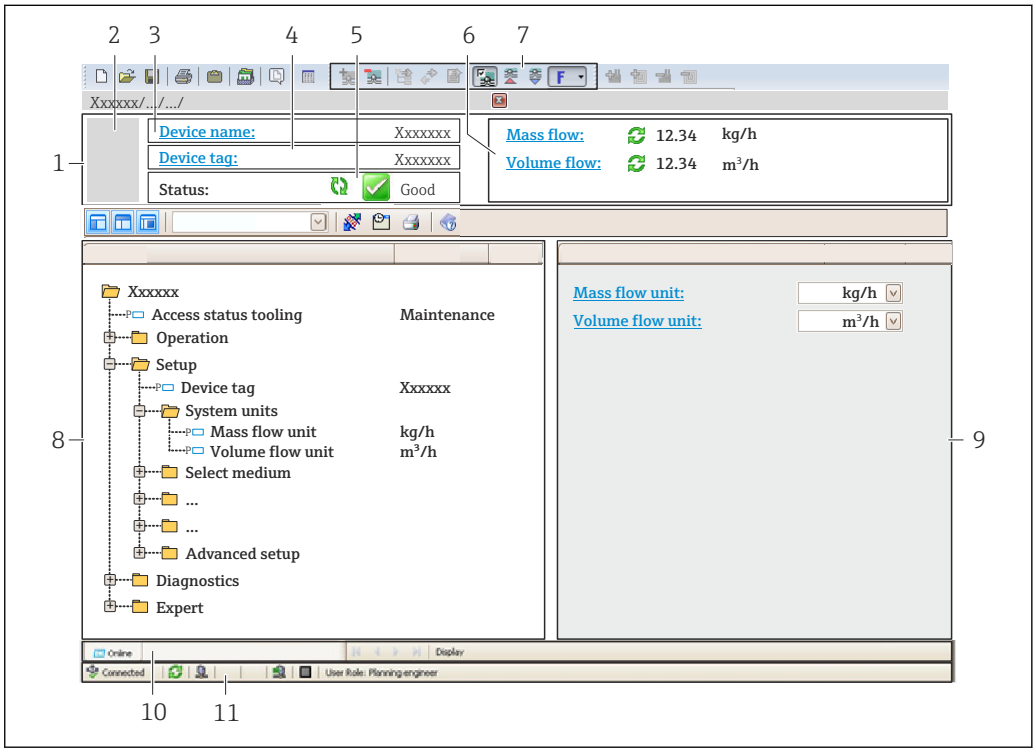

A0021051-EN

1 *Header*
2 *Picture of device*
3 *Device name*
4 *Tag name*
5 *Status area with status signal→ 82*
6 *Display area for current measured values*
7 *Edit toolbar with additional functions such as save/restore, event list and create documentation*
8 *Navigation area with operating menu structure*
9 *Working area*
10 *Range of action*
11 *Status area*

8.4.3 DeviceCare

Function scope

Tool to connect and configure Endress+Hauser field devices.

The fastest way to configure Endress+Hauser field devices is with the dedicated "DeviceCare" tool. Together with the device type managers (DTMs) it presents a convenient, comprehensive solution.

For details, see Innovation Brochure IN01047S

Source for device description files

See information → 50

9 System integration

9.1 Overview of device description files

9.1.1 Current version data for the device

Firmware version	01.00.zz	▪ On the title page of the Operating instructions ▪ On the transmitter nameplate ▪ Firmware version Diagnostics → Device information → Firmware version
Release date of firmware version	12.2015	---
Manufacturer ID	0x11	Manufacturer ID Diagnostics → Device information → Manufacturer ID
Device ID	0x843A	Device ID Expert → Communication → PROFINET configuration → PROFINET information → Device ID
Device type ID	Promag 100	Device Type Expert → Communication → PROFINET configuration → PROFINET information → Device Type
Device revision	1	Device revision Expert → Communication → PROFINET configuration → PROFINET information → Device revision
PROFINET version	2.3.x	–

For an overview of the different firmware versions for the device

9.1.2 Operating tools

The suitable device description file for the individual operating tools is listed in the table below, along with information on where the file can be acquired.

Operating tool via Service interface (CDI)	Sources for obtaining device descriptions
FieldCare	▪ www.endress.com → Download Area ▪ CD-ROM (contact Endress+Hauser) ▪ DVD (contact Endress+Hauser)
DeviceCare	▪ www.endress.com → Download Area ▪ CD-ROM (contact Endress+Hauser) ▪ DVD (contact Endress+Hauser)

9.2 Device master file (GSD)

In order to integrate field devices into a bus system, the PROFINET system needs a description of the device parameters, such as output data, input data, data format and data volume.

These data are available in the device master file (GSD) which is provided to the automation system when the communication system is commissioned. In addition device bit maps, which appear as icons in the network structure, can also be integrated.

The device master file (GSD) is in XML format, and the file is created in the GSDML description markup language.

9.2.1 File name of the device master file (GSD)

Example of the name of a device master file:

GSDML-V2.3.x-EH-PROMAG 100-yyyymmdd.xml

GSDML	Description language
V2.3.x	Version of the PROFINET specification
EH	Endress+Hauser
PROMAG	Instrument family
100	Transmitter
yyyymmdd	Date of issue (yyyy: year, mm: month, dd: day)
.xml	File name extension (XML file)

9.3 Cyclic data transmission

9.3.1 Overview of the modules

The following tables shows which modules are available to the measuring device for cyclic data exchange. Cyclic data exchange is performed with an automation system.

Measuring device		Direction Data flow	Control system
Module	**Slot**		
Analog Input module → 📄 52	1...10	→	PROFINET
Digital Input module → 📄 52	1...10	→	
Diagnose Input module → 📄 53	1...10	→	
Analog Output module → 📄 54	14, 15	←	
Digital Output module → 📄 56	16	←	
Totalizer 1 to 3 → 📄 53	11...13	← →	
Heartbeat Verification module → 📄 56	17	← →	

9.3.2 Description of the modules

The data structure is described from the perspective of the automation system:
- Input data: Are sent from the measuring device to the automation system.
- Output data: Are sent from the automation system to the measuring device.

Analog Input module

Transmit input variables from the measuring device to the automation system.

Analog Input modules cyclically transmit the selected input variables, along with the status, from the measuring device to the automation system. The input variable is depicted in the first four bytes in the form of a floating point number as per the IEEE 754 standard. The fifth byte contains status information pertaining to the input variable.

Selection: input variable

Slot	Input variables
1...10	▪ Volume flow ▪ Mass flow ▪ Corrected volume flow ▪ Flow velocity ▪ Conductivity ▪ Corrected conductivity ▪ Temperature ▪ Electronic temperature

Data structure

Input data of Analog Input

Byte 1	Byte 2	Byte 3	Byte 4	Byte 5
Measured value: floating point number (IEEE 754)				Status [1]

1) Status coding → 📄 57

Discrete Input module

Transmit discrete input values from the measuring device to the automation system.

Discrete input values are used by the measuring device to transmit the state of device functions to the automation system.

Discrete Input modules cyclically transmit discrete input values, along with the status, from the measuring device to the automation system. The discrete input value is depicted in the first byte. The second byte contains standardized status information pertaining to the input value.

Selection: device function

Slot	Device function	Status (meaning)
1...10	Empty pipe detection	▪ 0 (device function not active) ▪ 1 (device function active)
	Low flow cut off	

Data structure

Input data of Discrete Input

Byte 1	Byte 2
Discrete Input	Status [1]

1) Status coding → 📄 57

Diagnose Input module

Transmit discrete input values (diagnostic information) from the measuring device to the automation system.

Diagnostic information is used by the measuring device to transmit the device status to the automation system.

Diagnose Input modules transmit discrete input values from the measuring device to the automation system. The first two bytes contain the information regarding the diagnostic information number (). The third byte provides the status.

Selection: device function

Slot	Device function	Status (meaning)
1...10	Last diagnostics	Diagnostic information number () and status
	Current diagnosis	

Information about pending diagnostic information .

Data structure

Input data of Diagnose Input

Byte 1	Byte 2	Byte 3	Byte 4
Diagnostic information number		Status	Value 0

Status

Coding (hex)	Status
0x00	No device error is present.
0x01	Failure (F): A device error is present. The measured value is no longer valid.
0x02	Function check (C): The device is in service mode (e.g. during a simulation).
0x04	Maintenance required (M): Maintenance is required. The measured value is still valid.
0x08	Out of specification (S): The device is being operated outside its technical specification limits (e.g. process temperature range).

Totalizer module

The Totalizer module consists of the Totalizer Value, Totalizer Control and Totalizer Mode submodules.

Totalizer Value submodule

Transmit transmitter value from the device to the automation system.

Totalizer modules cyclically transmit a selected totalizer value, along with the status, from the measuring device to the automation system via the Totalizer Value submodule. The totalizer value is depicted in the first four bytes in the form of a floating point number as per the IEEE 754 standard. The fifth byte contains status information pertaining to the totalizer value.

Selection: input variable

Slot	Sub-slot	Input variable
11…13	1	▪ Volume flow ▪ Mass flow ▪ Corrected volume flow

Data structure of input data (Totalizer Value submodule)

Byte 1	Byte 2	Byte 3	Byte 4	Byte 5
Measured value: floating point number (IEEE 754)				Status [1]

1) Status coding → 📄 57

Totalizer Control submodule

Control the totalizer via the automation system.

Selection: control totalizer

Slot	Sub-slot	Value	Control totalizer
11…13	2	0	Totalize
		1	Reset + hold
		2	Preset + hold
		3	Reset + totalize
		4	Preset + totalize
		5	Hold

Data structure of output data (Totalizer Control submodule)

Byte 1
Control variable

Totalizer Mode submodule

Configure the totalizer via the automation system.

Selection: totalizer configuration

Slot	Sub-slot	Value	Control totalizer
11…13	3	0	Balancing
		1	Balance the positive flow
		2	Balance the negative flow

Data structure of output data (Totalizer Mode submodule)

Byte 1
Configuration variable

Analog Output module

Transmit compensation values from the automation system to the measuring device.

Analog Output modules cyclically transmit compensation values, along with the status and the associated unit, from the automation system to the measuring device. The compensation value is depicted in the first four bytes in the form of a floating point number as per the IEEE 754 standard. The fifth byte contains standardized status information pertaining to the compensation value. The unit is transmitted in the sixth and seventh byte.

Assigned compensation values

The configuration is performed via: Expert → Sensor → External compensation

Slot	Compensation value
14	External density
15	External temperature

Available units

Density		Temperature	
Unit code	Unit	Unit code	Unit
1100	g/cm³	1001	°C
1101	g/m³	1002	°F
1099	kg/dm³	1000	K
1103	kg/l	1003	°R
1097	kg/m³		
1628	SD4°C		
1629	SD15°C		
1630	SD20°C		
32833	SG4°C		
32832	SG15°C		
32831	SG20°C		
1107	lb/ft³		
1108	lb/gal (us)		
32836	lb/bbl (us;liq.)		
32835	lb/bbl (us;beer)		
32837	lb/bbl (us;oil)		
32834	lb/bbl (us;tank)		
1403	lb/gal (imp)		
32838	lb/bbl (imp;beer)		
32839	lb/bbl (imp;oil)		

Data structure

Output data of Analog Output

Byte 1	Byte 2	Byte 3	Byte 4	Byte 5	Byte 6	Byte 7
Measured value: floating point number (IEEE 754)				Status [1]	Unit code	

1) Status coding → 📄 57

Failsafe mode

A failsafe mode can be defined for using the compensation values.

If the status is GOOD or UNCERTAIN, the compensation values transmitted by the automation system are used. If the status is BAD, the failsafe mode is activated for the use of the compensation values.

Parameters are available per compensation value to define the failsafe mode: Expert → Sensor → External compensation

Fail safe type parameter
- Fail safe value option: The value defined in the Fail safe value parameter is used.
- Fallback value option: The last valid value is used.
- Off option: The failsafe mode is disabled.

Fail safe value parameter
Use this parameter to enter the compensation value which is used if the Fail safe value option is selected in the Fail safe type parameter.

Digital Output module

Transmit discrete output values from the automation system to the measuring device.

Discrete output values are used by the automation system to enable and disable device functions.

Digital Output modules cyclically transmit discrete output values, along with the status, from the automation system to the measuring device. The discrete output value is transmitted in the first byte. The second byte contains status information pertaining to the output value.

Assigned device functions

Slot	Device function	Status (meaning)
16	Flow override	▪ 0 (disable device function) ▪ 1 (enable device function)

Data structure

Output data of Discrete Output

Byte 1	Byte 2
Discrete Output	Status [1] [2]

1) Status coding → 🗎 57
2) If the status is BAD, the control variable is not adopted.

Heartbeat Verification module

Receive discrete output values from the automation system and transmit discrete input values from the measuring device to the automation system.

The Heartbeat Verification module receives discrete output data from the automation system and transmits discrete input data from the measuring device to the automation system.

The discrete output value is provided by the automation system in order to start Heartbeat Verification. The discrete input value is depicted in the first byte. The second byte contains status information pertaining to the input value.

The discrete input value is used by the measuring device to transmit the status of the Heartbeat Verification device functions to the automation system. The module cyclically transmits the discrete input value, along with the status, to the automation system. The

discrete input value is depicted in the first byte. The second byte contains status information pertaining to the input value.

Only available with the Heartbeat Verification application package.

Assigned device functions

Slot	Device function	Bit	Verification status
17	Status verification (input data)	0	Verification has not been performed
		1	Verification has failed
		2	Currently performing verification
		3	Verification terminated
	Verification result (input data)	**Bit**	**Verification result**
		4	Verification has failed
		5	Verification performed successfully
		6	Verification has not been performed
		7	–
	Start verification (output data)	**Verification control**	
		A change in the status from 0 to 1 starts the verification	

Data structure

Output data of the Heartbeat Verification module

Byte 1
Discrete Output

Input data of the Heartbeat Verification module

Byte 1	Byte 2
Discrete Input	Status [1]

1) Status coding → 57

9.3.3 Status coding

Status	Coding (hex)	Meaning
BAD - Maintenance alarm	0x24	A measured value is not available because a device error has occurred.
BAD - Process related	0x28	A measured value is not available because the process conditions are not within the device's technical specification limits.
BAD - Function check	0x3C	A function check is active (e.g. cleaning or calibration)
UNCERTAIN - Initial value	0x4F	A pre-defined value is output until a correct measured value is available again or until remedial measures have been carried out that change this status.
UNCERTAIN - Maintenance demanded	0x68	Signs of wear and tear have been detected on the measuring device. Short-term maintenance is needed to ensure that the measuring device remains operational. The measured value might be invalid. The use of the measured value depends on the application.

Status	Coding (hex)	Meaning
UNCERTAIN - Process related	0x78	The process conditions are not within the device's technical specification limits. This could have a negative impact on the quality and accuracy of the measured value. The use of the measured value depends on the application.
GOOD - OK	0x80	No error has been diagnosed.
GOOD - Maintenance demanded	0xA8	The measured value is valid. It is highly advisable to service the device in the near future.
GOOD - Function check	0xBC	The measured value is valid. The measuring device is performing an internal function check. The function check does not have any noticeable effect on the process.

9.3.4 Factory setting

The slots are already assigned in the automation system for initial commissioning.

Assigned slots

Slot	Factory setting
1	Volume flow
2	Mass flow
3	Corrected volume flow
4	Flow velocity
5	Conductivity
6	Corrected conductivity
7	Temperature
8...10	–
11	Totalizer 1
12	Totalizer 2
13	Totalizer 3

10 Commissioning

10.1 Function check

Before commissioning the measuring device:

▶ Make sure that the post-installation and post-connection checks have been performed.

- "Post-installation check" checklist→ 🗎 28
- "Post-connection check" checklist → 🗎 38

10.2 Identifying the device in the PROFINET network

A device can be quickly identified within a plant using the PROFINET flash function. If the PROFINET flash function is activated in the automation system, the LED indicating the network status flashes and the red backlight of the onsite display is switched on.

10.3 Startup parameterization

By activating the startup parameterization function (NSU: Normal Startup Unit), the configuration of the most important measuring device parameters is taken from the automation system.

ℹ Configurations taken from the automation system .

10.4 Connecting via FieldCare

- For FieldCare connection
- For connecting via FieldCare → 🗎 48
- For the FieldCare → 🗎 49 user interface

10.5 Setting the operating language

Factory setting: English or ordered local language

The operating language can be set in FieldCare, DeviceCare or via the Web server: Operation → Display language

10.6 Configuring the measuring device

The **Setup** menu with its submenus contains all the parameters needed for standard operation.

Navigation
"Setup" menu

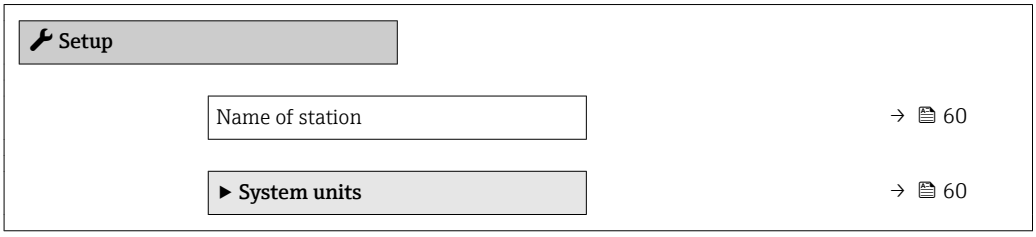

▶ Communication	→ 🗎 62
▶ Display	→ 🗎 67
▶ Low flow cut off	→ 🗎 62
▶ Empty pipe detection	→ 🗎 64
▶ Advanced setup	→ 🗎 65

10.6.1 Defining the tag name

A measuring point can be quickly identified within a plant on the basis of the tag name. The tag name is equivalent to the device name (name of station) of the PROFINET specification (data length: 255 bytes)

The device name can be changed via DIP switches or the automation system → 🗎 36.

The device name currently used is displayed in the **Name of station** parameter.

Navigation
"Setup" menu → Name of station

Parameter overview with brief description

Parameter	Description	User interface	Factory setting
Name of station	Name of the measuring point.	Max. 32 characters such as letters and numbers.	EH-PROMAG100 serial number of the device

10.6.2 Setting the system units

In the **System units** submenu the units of all the measured values can be set.

Depending on the device version, not all submenus and parameters are available in every device. The selection can vary depending on the order code.

Navigation
"Setup" menu → Advanced setup → System units

▶ System units	
Volume flow unit	→ 🗎 61
Volume unit	→ 🗎 61
Conductivity unit	→ 🗎 61
Temperature unit	→ 🗎 61
Mass flow unit	→ 🗎 61
Mass unit	→ 🗎 61

Density unit	→ 📄 61
Corrected volume flow unit	→ 📄 62
Corrected volume unit	→ 📄 62

Parameter overview with brief description

Parameter	Prerequisite	Description	Selection	Factory setting
Volume flow unit	–	Select volume flow unit. *Result* The selected unit applies for: ▪ Output ▪ Low flow cut off ▪ Simulation process variable	Unit choose list	Country-specific: ▪ l/h ▪ gal/min (us)
Volume unit	–	Select volume unit.	Unit choose list	Country-specific: ▪ m^3 ▪ gal (us)
Conductivity unit	The **On** option is selected in the **Conductivity measurement** parameter parameter.	Select conductivity unit. *Effect* The selected unit applies for: Simulation process variable	Unit choose list	µS/cm
Temperature unit	–	Select temperature unit. *Result* The selected unit applies for: ▪ **Temperature** parameter ▪ **Maximum value** parameter ▪ **Minimum value** parameter ▪ **External temperature** parameter ▪ **Maximum value** parameter ▪ **Minimum value** parameter ▪ **Fail safe value of external temperature** parameter	Unit choose list	Country-specific: ▪ °C ▪ °F
Mass flow unit	–	Select mass flow unit. *Result* The selected unit applies for: ▪ Output ▪ Low flow cut off ▪ Simulation process variable	Unit choose list	Country-specific: ▪ kg/h ▪ lb/min
Mass unit	–	Select mass unit.	Unit choose list	Country-specific: ▪ kg ▪ lb
Density unit	–	Select density unit. *Result* The selected unit applies for: ▪ Output ▪ Simulation process variable	Unit choose list	Country-specific: ▪ kg/l ▪ lb/ft^3

Parameter	Prerequisite	Description	Selection	Factory setting
Corrected volume flow unit	–	Select corrected volume flow unit. *Result* The selected unit applies for: **Corrected volume flow** parameter (→ 🗎 75)	Unit choose list	Country-specific: ▪ Nl/h ▪ Sft^3/h
Corrected volume unit	–	Select corrected volume unit.	Unit choose list	Country-specific: ▪ Nm^3 ▪ Sft^3

10.6.3 Displaying the communication interface

The **Communication** submenu shows all the current parameter settings for selecting and configuring the communication interface.

Navigation

"Setup" menu → Communication

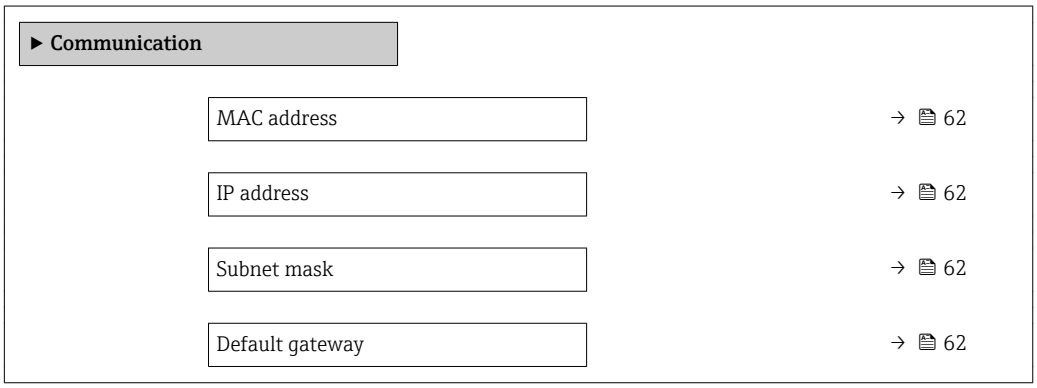

Parameter overview with brief description

Parameter	Description	User interface	Factory setting
MAC address	Displays the MAC address of the measuring device. ℹ MAC = Media Access Control	Unique 12-digit character string comprising letters and numbers, e.g.: 00:07:05:10:01:5F	Each measuring device is given an individual address.
IP address	Displays the IP address of the Web server of the measuring device.	4 octet: 0 to 255 (in the particular octet)	0.0.0.0
Subnet mask	Displays the subnet mask.	4 octet: 0 to 255 (in the particular octet)	0.0.0.0
Default gateway	Displays the default gateway.	4 octet: 0 to 255 (in the particular octet)	0.0.0.0

10.6.4 Configuring the low flow cut off

The **Low flow cut off** submenu contains the parameters that must be set in order to configure the low flow cut off.

Navigation

"Setup" menu → Low flow cut off

▶ Low flow cut off	
Assign process variable	→ 📄 63
On value low flow cutoff	→ 📄 63
Off value low flow cutoff	→ 📄 63
Pressure shock suppression	→ 📄 63

Parameter overview with brief description

Parameter	Prerequisite	Description	Selection / User entry	Factory setting
Assign process variable	–	Select process variable for low flow cut off.	▪ Off ▪ Volume flow ▪ Mass flow ▪ Corrected volume flow	Volume flow
On value low flow cutoff	One of the following options is selected in the **Assign process variable** parameter (→ 📄 63): ▪ Volume flow ▪ Mass flow ▪ Corrected volume flow	Enter on value for low flow cut off.	Signed floating-point number	Depends on country and nominal diameter
Off value low flow cutoff	One of the following options is selected in the **Assign process variable** parameter (→ 📄 63): ▪ Volume flow ▪ Mass flow ▪ Corrected volume flow	Enter off value for low flow cut off.	0 to 100.0 %	50 %
Pressure shock suppression	One of the following options is selected in the **Assign process variable** parameter (→ 📄 63): ▪ Volume flow ▪ Mass flow ▪ Corrected volume flow	Enter time frame for signal suppression (= active pressure shock suppression).	0 to 100 s	0 s

10.6.5 Configuring empty pipe detection

The **Empty pipe detection** submenu contains parameters that must be configured for the configuration of empty pipe detection.

Navigation
"Setup" menu → Empty pipe detection

▶ Empty pipe detection	
Empty pipe detection	→ 64
New adjustment	→ 64
Progress	→ 64
Switch point empty pipe detection	→ 64
Response time empty pipe detection	→ 64

Parameter overview with brief description

Parameter	Prerequisite	Description	Selection / User interface / User entry	Factory setting
Empty pipe detection	–	Switch empty pipe detection on and off.	▪ Off ▪ On	Off
New adjustment	The **On** option is selected in the **Empty pipe detection** parameter.	Select type of adjustment.	▪ Cancel ▪ Empty pipe adjust ▪ Full pipe adjust	Cancel
Progress	The **On** option is selected in the **Empty pipe detection** parameter.	Shows the progress.	▪ Ok ▪ Busy ▪ Not ok	–
Switch point empty pipe detection	The **On** option is selected in the **Empty pipe detection** parameter.	Enter hysteresis in %, below this value the measuring tube will detected as empty.	0 to 100 %	10 %
Response time empty pipe detection	In the **Empty pipe detection** parameter (→ 64), the **On** option is selected.	Enter the time before diagnostic message S862 "Pipe empty" is displayed for empty pipe detection.	0 to 100 s	1 s

10.7 Advanced settings

The **Advanced setup** submenu together with its submenus contains parameters for specific settings.

Navigation
"Setup" menu → Advanced setup

▶ **Advanced setup**	
Enter access code	
▶ **Sensor adjustment**	→ 📄 65
▶ **Totalizer 1 to n**	→ 📄 65
▶ **Display**	→ 📄 67
▶ **Electrode cleaning circuit**	→ 📄 69
▶ **Administration**	→ 📄 70

10.7.1 Carrying out a sensor adjustment

The **Sensor adjustment** submenu contains parameters that pertain to the functionality of the sensor.

Navigation
"Setup" menu → Advanced setup → Sensor adjustment

▶ **Sensor adjustment**	
Installation direction	→ 📄 65

Parameter overview with brief description

Parameter	Description	Selection	Factory setting
Installation direction	Set sign of flow direction to match the direction of the arrow on the sensor.	▪ Flow in arrow direction ▪ Flow against arrow direction	Flow in arrow direction

10.7.2 Configuring the totalizer

In the **"Totalizer 1 to n" submenu** the individual totalizer can be configured.

Navigation

"Setup" menu → Advanced setup → Totalizer 1 to n

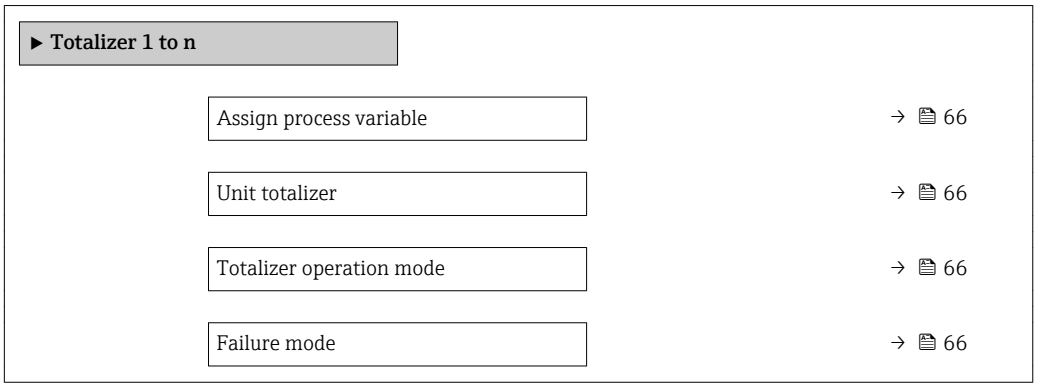

Parameter overview with brief description

Parameter	Prerequisite	Description	Selection	Factory setting
Assign process variable	–	Select process variable for totalizer.	▪ Volume flow ▪ Mass flow ▪ Corrected volume flow ▪ Total mass flow ▪ Condensate mass flow ▪ Energy flow ▪ Heat flow difference	Volume flow
Unit totalizer	One of the following options is selected in the **Assign process variable** parameter: ▪ Volume flow ▪ Mass flow ▪ Corrected volume flow	Select the unit for the process variable of the totalizer.	Unit choose list	Country-specific: ▪ m^3 ▪ ft^3
Totalizer operation mode	In the **Assign process variable** parameter, one of the following options is selected: ▪ Volume flow ▪ Mass flow ▪ Corrected volume flow	Select totalizer calculation mode.	▪ Net flow total ▪ Forward flow total ▪ Reverse flow total ▪ Last valid value	Net flow total
Failure mode	One of the following options is selected in the **Assign process variable** parameter: ▪ Volume flow ▪ Mass flow ▪ Corrected volume flow	Define the totalizer behavior in the event of a device alarm.	▪ Stop ▪ Actual value ▪ Last valid value	Actual value

10.7.3 Carrying out additional display configurations

In the **Display** submenu you can set all the parameters associated with the configuration of the local display.

Navigation
"Setup" menu → Advanced setup → Display

▶ Display	
Format display	→ 68
Value 1 display	→ 68
0% bargraph value 1	→ 68
100% bargraph value 1	→ 68
Decimal places 1	→ 68
Value 2 display	→ 68
Decimal places 2	→ 68
Value 3 display	→ 68
0% bargraph value 3	→ 68
100% bargraph value 3	→ 68
Decimal places 3	→ 68
Value 4 display	→ 68
Decimal places 4	→ 68
Display language	→ 69
Display interval	→ 69
Display damping	→ 69
Header	→ 69
Header text	→ 69
Separator	→ 69
Backlight	

Parameter overview with brief description

Parameter	Prerequisite	Description	Selection / User entry	Factory setting
Format display	A local display is provided.	Select how measured values are shown on the display.	▪ 1 value, max. size ▪ 1 bargraph + 1 value ▪ 2 values ▪ 1 value large + 2 values ▪ 4 values	1 value, max. size
Value 1 display	A local display is provided.	Select the measured value that is shown on the local display.	▪ Volume flow ▪ Mass flow ▪ Corrected volume flow ▪ Flow velocity ▪ Electronic temperature ▪ Totalizer 1 ▪ Totalizer 2 ▪ Totalizer 3 ▪ None	Volume flow
0% bargraph value 1	A local display is provided.	Enter 0% value for bar graph display.	Signed floating-point number	Country-specific: ▪ 0 l/h ▪ 0 gal/min (us)
100% bargraph value 1	A local display is provided.	Enter 100% value for bar graph display.	Signed floating-point number	Depends on country and nominal diameter
Decimal places 1	A measured value is specified in the **Value 1 display** parameter.	Select the number of decimal places for the display value.	▪ x ▪ x.x ▪ x.xx ▪ x.xxx ▪ x.xxxx	x.xx
Value 2 display	A local display is provided.	Select the measured value that is shown on the local display.	For the picklist, see the **Value 1 display** parameter	None
Decimal places 2	A measured value is specified in the **Value 2 display** parameter.	Select the number of decimal places for the display value.	▪ x ▪ x.x ▪ x.xx ▪ x.xxx ▪ x.xxxx	x.xx
Value 3 display	A local display is provided.	Select the measured value that is shown on the local display.	For the picklist, see the **Value 1 display** parameter (→ 🗎 68)	None
0% bargraph value 3	A selection was made in the **Value 3 display** parameter.	Enter 0% value for bar graph display.	Signed floating-point number	Country-specific: ▪ 0 l/h ▪ 0 gal/min (us)
100% bargraph value 3	A selection was made in the **Value 3 display** parameter.	Enter 100% value for bar graph display.	Signed floating-point number	0
Decimal places 3	A measured value is specified in the **Value 3 display** parameter.	Select the number of decimal places for the display value.	▪ x ▪ x.x ▪ x.xx ▪ x.xxx ▪ x.xxxx	x.xx
Value 4 display	A local display is provided.	Select the measured value that is shown on the local display.	For the picklist, see the **Value 1 display** parameter (→ 🗎 68)	None
Decimal places 4	A measured value is specified in the **Value 4 display** parameter.	Select the number of decimal places for the display value.	▪ x ▪ x.x ▪ x.xx ▪ x.xxx ▪ x.xxxx	x.xx

Parameter	Prerequisite	Description	Selection / User entry	Factory setting
Display language	A local display is provided.	Set display language.	▪ English ▪ Deutsch * ▪ Français * ▪ Español * ▪ Italiano * ▪ Nederlands * ▪ Portuguesa * ▪ Polski * ▪ русский язык (Russian) * ▪ Svenska * ▪ Türkçe * ▪ 中文 (Chinese) * ▪ 日本語 (Japanese) * ▪ 한국어 (Korean) * ▪ العَرَبيّة (Arabic) * ▪ Bahasa Indonesia * ▪ ภาษาไทย (Thai) * ▪ tiếng Việt (Vietnamese) * ▪ čeština (Czech) *	English (alternatively, the ordered language is preset in the device)
Display interval	A local display is provided.	Set time measured values are shown on display if display alternates between values.	1 to 10 s	5 s
Display damping	A local display is provided.	Set display reaction time to fluctuations in the measured value.	0.0 to 999.9 s	0.0 s
Header	A local display is provided.	Select header contents on local display.	▪ Device tag ▪ Free text	Device tag
Header text	In the **Header** parameter, the **Free text** option is selected.	Enter display header text.	Max. 12 characters such as letters, numbers or special characters (e.g. @, %, /)	----------
Separator	A local display is provided.	Select decimal separator for displaying numerical values.	▪ . (point) ▪ , (comma)	. (point)

* Visibility depends on order options or device settings

10.7.4 Performing electrode cleaning

The **Electrode cleaning circuit** submenu contains parameters that must be configured for the configuration of electrode cleaning.

The submenu is only available if the device was ordered with electrode cleaning.

Navigation

"Setup" menu → Advanced setup → Electrode cleaning circuit

▶ Electrode cleaning circuit	
Electrode cleaning circuit	→ 📄 70
ECC duration	→ 📄 70
ECC recovery time	→ 📄 70

ECC cleaning cycle	→ 📄 70
ECC Polarity	→ 📄 70

Parameter overview with brief description

Parameter	Prerequisite	Description	Selection / User entry / User interface	Factory setting
Electrode cleaning circuit	For the following order code: "Application package", option **EC** "ECC electrode cleaning"	Enable the cyclic electrode cleaning circuit.	▪ Off ▪ On	Off
ECC duration	For the following order code: "Application package", option **EC** "ECC electrode cleaning"	Enter the duration of electrode cleaning in seconds.	0.01 to 30 s	2 s
ECC recovery time	For the following order code: "Application package", option **EC** "ECC electrode cleaning"	Define recovery time after electrode cleaning. During this time the current output values will be held at last valid value.	Positive floating-point number	60 s
ECC cleaning cycle	For the following order code: "Application package", option **EC** "ECC electrode cleaning"	Enter the pause duration between electrode cleaning cycles.	0.5 to 168 h	0.5 h
ECC Polarity	For the following order code: "Application package", option **EC** "ECC electrode cleaning"	Select the polarity of the electrode cleaning circuit.	▪ Positive ▪ Negative	Depends on the electrode material: ▪ Platinum: **Negative** option ▪ Tantalum, Alloy C22, stainless steel: **Positive** option

10.7.5 Using parameters for device administration

The **Administration** submenu systematically guides the user through all the parameters that can be used for device administration purposes.

Navigation

"Setup" menu → Advanced setup → Administration

▶ **Administration**	
Define access code	→ 📄 71
Device reset	→ 📄 71

Parameter overview with brief description

Parameter	Description	User entry / Selection	Factory setting
Define access code	Define release code for write access to parameters.	0 to 9 999	0
Device reset	Reset the device configuration - either entirely or in part - to a defined state.	▪ Cancel ▪ To delivery settings ▪ Restart device ▪ Delete powerfail storage ▪ Delete T-DAT ▪ Delete factory data	Cancel

10.8 Simulation

The **Simulation** submenu enables you to simulate, without a real flow situation, various process variables in the process and the device alarm mode and to verify downstream signal chains (switching valves or closed-control loops).

Navigation

"Diagnostics" menu → Simulation

▶ Simulation	
Assign simulation process variable	→ 📄 71
Process variable value	→ 📄 71
Simulation device alarm	→ 📄 71
Diagnostic event simulation	→ 📄 72

Parameter overview with brief description

Parameter	Prerequisite	Description	Selection / User entry	Factory setting
Assign simulation process variable	–	Select a process variable for the simulation process that is activated.	▪ Off ▪ Volume flow ▪ Mass flow ▪ Corrected volume flow ▪ Conductivity *	Off
Process variable value	One of the following options is selected in the **Assign simulation process variable** parameter (→ 📄 71): ▪ Volume flow ▪ Mass flow ▪ Corrected volume flow ▪ Conductivity * ▪ Corrected conductivity * ▪ Temperature *	Enter the simulation value for the selected process variable.	Depends on the process variable selected	0
Simulation device alarm	–	Switch the device alarm on and off.	▪ Off ▪ On	Off

Parameter	Prerequisite	Description	Selection / User entry	Factory setting
Diagnostic event category	–	Select a diagnostic event category.	▪ Sensor ▪ Electronics ▪ Configuration ▪ Process	Process
Diagnostic event simulation	–	Select a diagnostic event to simulate this event.	▪ Off ▪ Diagnostic event picklist (depends on the category selected)	Off

* Visibility depends on order options or device settings

10.9 Protecting settings from unauthorized access

The following options exist for protecting the configuration of the measuring device from unintentional modification after commissioning:
- Write protection via access code for Web browser → 🗎 72
- Write protection via write protection switch → 🗎 73
- Write protection via startup parameterization → 🗎 59

10.9.1 Write protection via access code

With the customer-specific access code, access to the measuring device via the Web browser is protected, as are the parameters for the measuring device configuration.

Navigation
"Setup" menu → Advanced setup → Administration → Define access code

▶ Administration	
Define access code	→ 🗎 71
Device reset	→ 🗎 71

Defining the access code via the Web browser

1. Navigate to the **Define access code** parameter.
2. Define a max. 16-digit numeric code as an access code.
3. Enter the access code again in the to confirm the code.
   ↳ The Web browser switches to the login page.

If no action is performed for 10 minutes, the Web browser automatically returns to the login page.

- If parameter write protection is activated via an access code, it can also only be deactivated via this access code .
- The user role with which the user is currently logged on via Web browser is indicated by the **Access status tooling** parameter. Navigation path: Operation → Access status tooling

10.9.2 Write protection via write protection switch

The write protection switch makes it possible to block write access to the entire operating menu with the exception of the following parameters:
- External pressure
- External temperature
- Reference density
- All parameters for configuring the totalizer

The parameter values are now read only and cannot be edited any more:
- Via service interface (CDI-RJ45)
- Via PROFINET

1. Depending on the housing version, loosen the securing clamp or fixing screw of the housing cover.
2. Depending on the housing version, unscrew or open the housing cover and disconnect the local display from the main electronics module where necessary → 📖 126.
3. 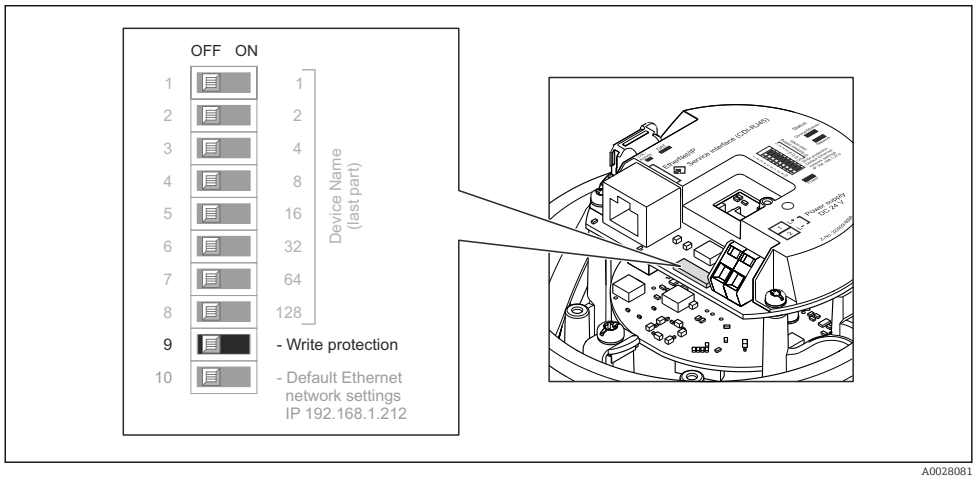

A0028081

   Setting the write protection switch on the main electronics module to the **On** position enables hardware write protection. Setting the write protection switch on the main electronics module to the **Off** position (factory setting) disables hardware write protection.

   ↳ If hardware write protection is enabled: the **Locking status** parameter displays the **Hardware locked** option ; if disabled, the **Locking status** parameter does not display any option .

4. Reverse the removal procedure to reassemble the transmitter.

10.9.3 Write protection via startup parameterization

Software write protection can be enabled via startup parameterization. If software write protection is enabled, device configuration can only be performed via the PROFINET controller. In this case, write access is **no longer** possible via:
- Acyclic PROFINET communication
- Service interface
- Web server

ℹ Startup parameterization settings .

11 Operation

11.1 Reading the device locking status

Device active write protection: **Locking status** parameter

Navigation
"Operation" menu → Locking status

Function scope of "Locking status" parameter

Options	Description
Hardware locked	The write protection switch (DIP switch) for hardware locking is activated on the I/O electronic module. This prevents write access to the parameters .
Temporarily locked	Write access to the parameters is temporarily locked on account of internal processes running in the device (e.g. data upload/download, reset etc.). Once the internal processing has been completed, the parameters can be changed once again.

11.2 Adjusting the operating language

Detailed information:
- To configure the operating language → 📄 59
- For information on the operating languages supported by the measuring device → 📄 128

11.3 Configuring the display

Detailed information:
On the advanced settings for the local display → 📄 67

11.4 Reading measured values

With the **Measured values** submenu, it is possible to read all the measured values.

Navigation
"Diagnostics" menu → Measured values

▶ **Measured values**		
	▶ **Process variables**	→ 📄 74
	▶ **Totalizer**	→ 📄 76

11.4.1 "Process variables" submenu

The **Process variables** submenu contains all the parameters needed to display the current measured values for each process variable.

Navigation

"Diagnostics" menu → Measured values → Process variables

▶ Process variables	
Volume flow	→ 🗎 75
Mass flow	→ 🗎 75
Conductivity	→ 🗎 75
Corrected volume flow	→ 🗎 75
Temperature	→ 🗎 75
Corrected conductivity	→ 🗎 75

Parameter overview with brief description

Parameter	Prerequisite	Description	User interface
Volume flow	–	Displays the volume flow currently measured. *Dependency* The unit is taken from the **Volume flow unit** parameter (→ 🗎 61).	Signed floating-point number
Mass flow	–	Displays the mass flow currently calculated. *Dependency* The unit is taken from the **Mass flow unit** parameter (→ 🗎 61).	Signed floating-point number
Corrected volume flow	–	Displays the corrected volume flow currently calculated. *Dependency* The unit is taken from the **Corrected volume flow unit** parameter (→ 🗎 62).	Signed floating-point number
Conductivity	The **On** option is selected in the **Conductivity measurement** parameter.	Displays the conductivity currently measured. *Dependency* The unit is taken from the **Conductivity unit** parameter (→ 🗎 61).	Signed floating-point number
Corrected conductivity	One of the following conditions is met: ▪ Order code for "Sensor option", option **CI** "Medium temperature sensor" or ▪ The temperature is read into the flowmeter from an external device.	Displays the conductivity currently corrected. *Dependency* The unit is taken from the **Conductivity unit** parameter (→ 🗎 61).	Positive floating-point number
Temperature	For the following order code: "Sensor option", option **CI** "Medium temperature sensor"	Displays the temperature currently calculated. *Dependency* The unit is taken from the **Temperature unit** parameter (→ 🗎 61).	Positive floating-point number

11.4.2 Totalizer

The **Totalizer** submenu contains all the parameters needed to display the current measured values for every totalizer.

Navigation
"Diagnostics" menu → Measured values → Totalizer 1 to n

▶ **Totalizer 1 to n**	
Assign process variable	→ 📄 76
Totalizer value 1 to n	→ 📄 76
Totalizer status 1 to n	→ 📄 76
Totalizer status (Hex) 1 to n	→ 📄 76

Parameter overview with brief description

Parameter	Prerequisite	Description	Selection / User entry / User interface	Factory setting
Assign process variable	–	Select process variable for totalizer.	▪ Volume flow ▪ Mass flow ▪ Corrected volume flow ▪ Total mass flow ▪ Condensate mass flow ▪ Energy flow ▪ Heat flow difference	Volume flow
Totalizer value 1 to n	In the **Assign process variable** parameter one of the following options is selected: ▪ Volume flow ▪ Mass flow ▪ Corrected volume flow ▪ Total mass flow ▪ Condensate mass flow ▪ Energy flow ▪ Heat flow difference	Displays the current totalizer counter value.	Signed floating-point number	0 m^3
Totalizer status 1 to n	–	Displays the current totalizer status.	▪ Good ▪ Uncertain ▪ Bad	–
Totalizer status (Hex) 1 to n	In **Target mode** parameter, the **Auto** option is selected.	Displays the current status value (hex) of the totalizer.	0 to 0xFF	–

11.5 Adapting the measuring device to the process conditions

The following are available for this purpose:
▪ Basic settings using the**Setup** menu (→ 📄 59)
▪ Advanced settings using the**Advanced setup** submenu (→ 📄 65)

11.6 Performing a totalizer reset

The totalizers are reset in the **Operation** submenu:
- Control Totalizer
- Reset all totalizers

Navigation
"Operation" menu → Totalizer handling

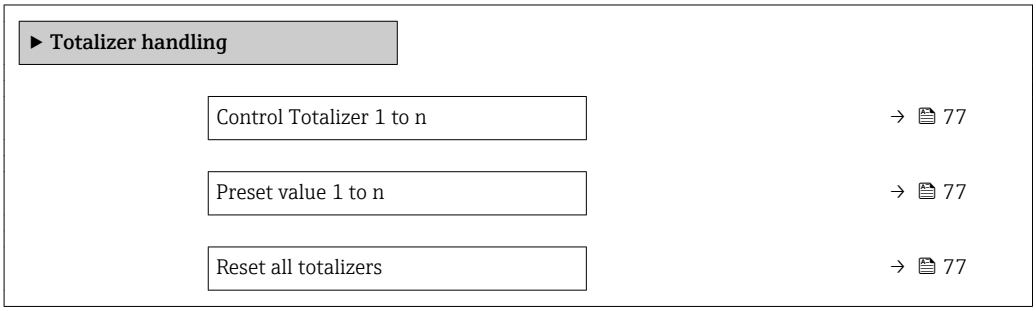

Parameter overview with brief description

Parameter	Prerequisite	Description	Selection / User entry	Factory setting
Control Totalizer 1 to n	One of the following options is selected in the **Assign process variable** parameter of the **Totalizer 1 to n** submenu: ▪ Volume flow ▪ Mass flow ▪ Corrected volume flow	Control totalizer value.	▪ Totalize ▪ Reset + hold ▪ Preset + hold ▪ Reset + totalize ▪ Preset + totalize ▪ Hold	Totalize
Preset value 1 to n	One of the following options is selected in the **Assign process variable** parameter of the **Totalizer 1 to n** submenu: ▪ Volume flow ▪ Mass flow ▪ Corrected volume flow	Specify start value for totalizer. *Dependency* The unit of the selected process variable is specified for the totalizer in the **Unit totalizer** parameter.	Signed floating-point number	0 l
Reset all totalizers	–	Reset all totalizers to 0 and start.	▪ Cancel ▪ Reset + totalize	Cancel

11.6.1 Function scope of the "Control Totalizer" parameter

Options	Description
Totalize	The totalizer is started or continues running.
Reset + hold	The totaling process is stopped and the totalizer is reset to 0.
Preset + hold	The totaling process is stopped and the totalizer is set to its defined start value from the **Preset value** parameter.
Reset + totalize	The totalizer is reset to 0 and the totaling process is restarted.
Preset + totalize	The totalizer is set to the defined start value from the **Preset value** parameter and the totaling process is restarted.

11.6.2 Function scope of the "Reset all totalizers" parameter

Options	Description
Cancel	No action is executed and the user exits the parameter.
Reset + totalize	Resets all totalizers to 0 and restarts the totaling process. This deletes all the flow values previously totalized.

12 Diagnostics and troubleshooting

12.1 General troubleshooting

For local display

Error	Possible causes	Solution
Local display dark and no output signals	Supply voltage does not match the value indicated on the nameplate.	Apply the correct supply voltage .
Local display dark and no output signals	The polarity of the supply voltage is wrong.	Correct the polarity.
Local display dark and no output signals	No contact between connecting cables and terminals.	Check the connection of the cables and correct if necessary.
Local display dark and no output signals	Terminals are not plugged into the I/O electronics module correctly.	Check terminals.
Local display dark and no output signals	I/O electronics module is defective.	Order spare part → 🗎 107.
Local display is dark, but signal output is within the valid range	Display is set too bright or too dark.	▪ Set the display brighter by simultaneously pressing ⊞ + Ⓔ. ▪ Set the display darker by simultaneously pressing ⊟ + Ⓔ.
Local display is dark, but signal output is within the valid range	The cable of the display module is not plugged in correctly.	Insert the plug correctly into the main electronics module and display module.
Local display is dark, but signal output is within the valid range	Display module is defective.	Order spare part → 🗎 107.
Backlighting of local display is red	Diagnostic event with "Alarm" diagnostic behavior has occurred.	Take remedial measures
Message on local display: "Communication Error" "Check Electronics"	Communication between the display module and the electronics is interrupted.	▪ Check the cable and the connector between the main electronics module and display module. ▪ Order spare part → 🗎 107.

For output signals

Error	Possible causes	Solution
Green power LED on the main electronics module of the transmitter is dark	Supply voltage does not match the value indicated on the nameplate.	Apply the correct supply voltage .
Device measures incorrectly.	Configuration error or device is operated outside the application.	1. Check and correct parameter configuration. 2. Observe limit values specified in the "Technical Data".

For access

Error	Possible causes	Solution
No write access to parameters	Hardware write protection enabled	Set the write protection switch on main electronics module to the **OFF** position → 🗎 73.
No connection via PROFINET	PROFINET bus cable connected incorrectly	Check terminal assignment → 🗎 31.
No connection via PROFINET	Device plug connected incorrectly	Check the pin assignment of the connector .

Error	Possible causes	Solution
Not connecting to Web server	Web server disabled	Using the "FieldCare" or "DeviceCare" operating tool, check whether the Web server of the measuring device is enabled, and enable it if necessary→ 🗎 46 .
	Incorrect setting for the Ethernet interface of the computer	1. Check the properties of the Internet protocol (TCP/IP) → 🗎 43. 2. Check the network settings with the IT manager.
Not connecting to Web server	▪ Incorrect IP address ▪ IP address is not known	1. If addressing via hardware: open the transmitter and check the IP address configured (last octet). 2. Check the IP address of the measuring device with the network manager. 3. If the IP address is not known, set DIP switch no. 10 to ON, restart the device and enter the factory IP address 192.168.1.212.
	Web browser setting "Use a Proxy Server for Your LAN" is enabled	Disable the use of the proxy server in the Web browser settings of the computer. Using the example of MS Internet Explorer: 1. Under *Control Panel* open *Internet options*. 2. Select the *Connections* tab and then double-click *LAN settings*. 3. In the *LAN settings* disable the use of the proxy server and select *OK* to confirm.
	Apart from the active network connection to the measuring device, other network connections are also being used.	▪ Make sure that no other network connections are established by the computer (also no WLAN) and close other programs with network access to the computer. ▪ If using a docking station for notebooks, make sure that a network connection to another network is not active.
Web browser frozen and operation no longer possible	Data transfer active	Wait until data transfer or current action is finished.
	Connection lost	1. Check cable connection and power supply. 2. Refresh the Web browser and restart if necessary.
Content of Web browser incomplete or difficult to read	Not using optimum version of Web server.	1. Use the correct Web browser version → 🗎 42. 2. Clear the Web browser cache and restart the Web browser.
	Unsuitable view settings.	Change the font size/display ratio of the Web browser.
No or incomplete display of contents in the Web browser	▪ JavaScript not enabled ▪ JavaScript cannot be enabled	1. Enable JavaScript. 2. Enter http://XXX.XXX.X.XXX/basic.html as the IP address.

Error	Possible causes	Solution
Operation with FieldCare or DeviceCare via CDI-RJ45 service interface (port 8000)	Firewall of computer or network is preventing communication	Depending on the settings of the firewall used on the computer or in the network, the firewall must be adapted or disabled to allow FieldCare/DeviceCare access.
Flashing of firmware with FieldCare or DeviceCare via CDI-RJ45 service interface (via port 8000 or TFTP ports)	Firewall of computer or network is preventing communication	Depending on the settings of the firewall used on the computer or in the network, the firewall must be adapted or disabled to allow FieldCare/DeviceCare access.

For system integration

Error	Possible causes	Solution
The device name is not displayed correctly and contains coding.	A device name containing one or more underscores has been specified via the automation system.	Specify a correct device name (without underscores) via the automation system.

12.2 Diagnostic information via light emitting diodes

12.2.1 Transmitter

Different LEDs in the transmitter provide information on the device status.

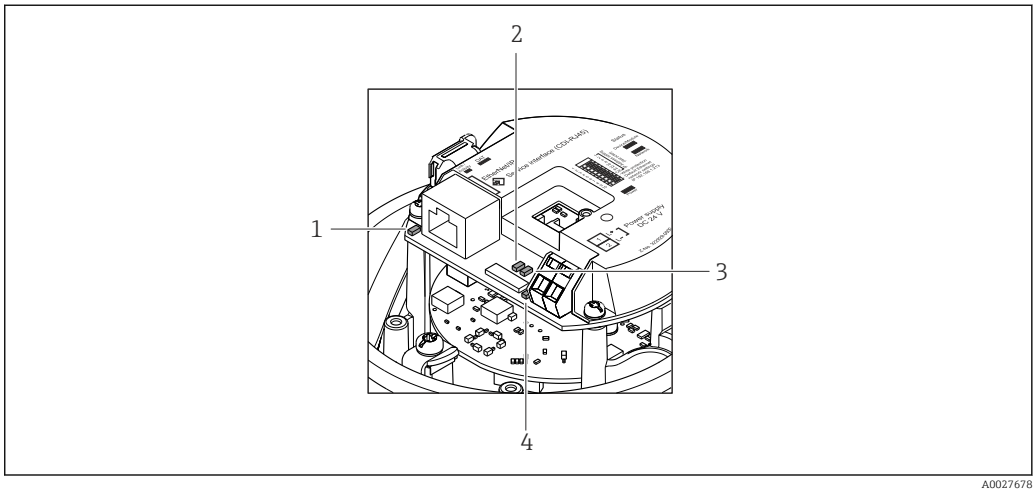

A0027678

1 *Link/Activity*
2 *Network status*
3 *Device status*
4 *Supply voltage*

LED	Color	Meaning
Supply voltage	Off	Supply voltage is off or too low
	Green	Supply voltage is ok
Device status	Green	Device status is ok
	Flashing red	A device error of diagnostic behavior "Warning" has occurred
	Red	A device error of diagnostic behavior "Alarm" has occurred
Network status	Green	Device performing cyclic data exchange

LED	Color	Meaning
	Flashing green	Following request from automation system: Flash frequency: 1 Hz (flash functionality: 500 ms on, 500 ms off) The device does not have an IP address, no cyclic data exchange Flash frequency: 3 Hz
	Red	IP address is available but no connection to the automation system
	Flashing red	Cyclic connection was established but connection was dropped Flash frequency: 3 Hz
Link/Activity	Orange	Link available but no activity
	Flashing orange	Activity present

12.3 Diagnostic information in the Web browser

12.3.1 Diagnostic options

Any faults detected by the measuring device are displayed in the Web browser on the home page once the user has logged on.

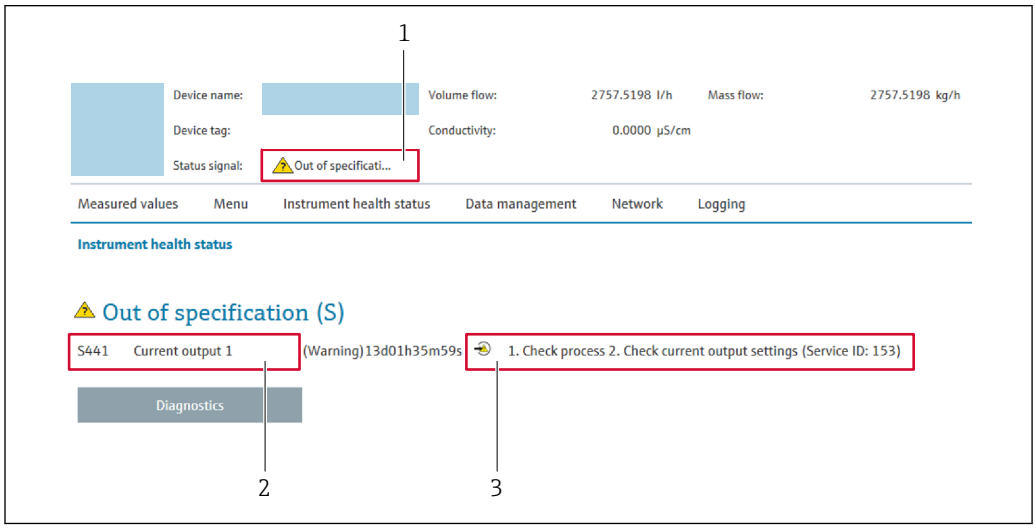

A0031056

1 *Status area with status signal*
2 *Diagnostic information→ 📄 83*
3 *Remedy information with Service ID*

In addition, diagnostic events which have occurred can be shown in the **Diagnostics** menu:
- Via parameter
- Via submenu → 📄 101

Status signals

The status signals provide information on the state and reliability of the device by categorizing the cause of the diagnostic information (diagnostic event).

Symbol	Meaning
⊗	**Failure** A device error has occurred. The measured value is no longer valid.
▽	**Function check** The device is in service mode (e.g. during a simulation).

Symbol	Meaning
⚠	**Out of specification** The device is operated: Outside its technical specification limits (e.g. outside the process temperature range)
	Maintenance required Maintenance is required. The measured value is still valid.

The status signals are categorized in accordance with VDI/VDE 2650 and NAMUR Recommendation NE 107.

Diagnostic information

The fault can be identified using the diagnostic information. The short text helps you by providing information about the fault.

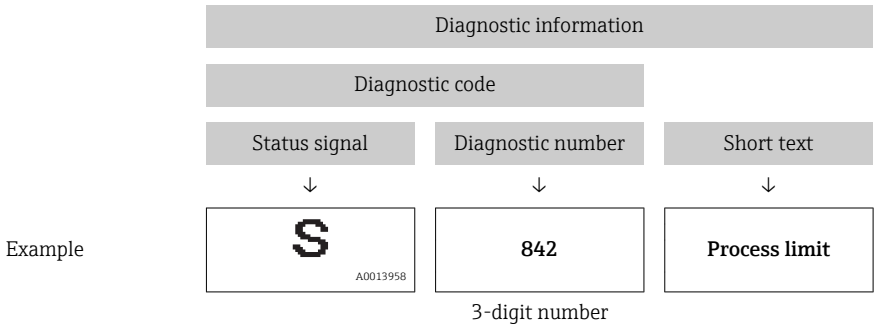

12.3.2 Calling up remedy information

Remedy information is provided for every diagnostic event to ensure that problems can be rectified quickly. These measures are displayed in red along with the diagnostic event and the related diagnostic information.

12.4 Diagnostic information in DeviceCare or FieldCare

12.4.1 Diagnostic options

Any faults detected by the measuring device are displayed on the home page of the operating tool once the connection has been established.

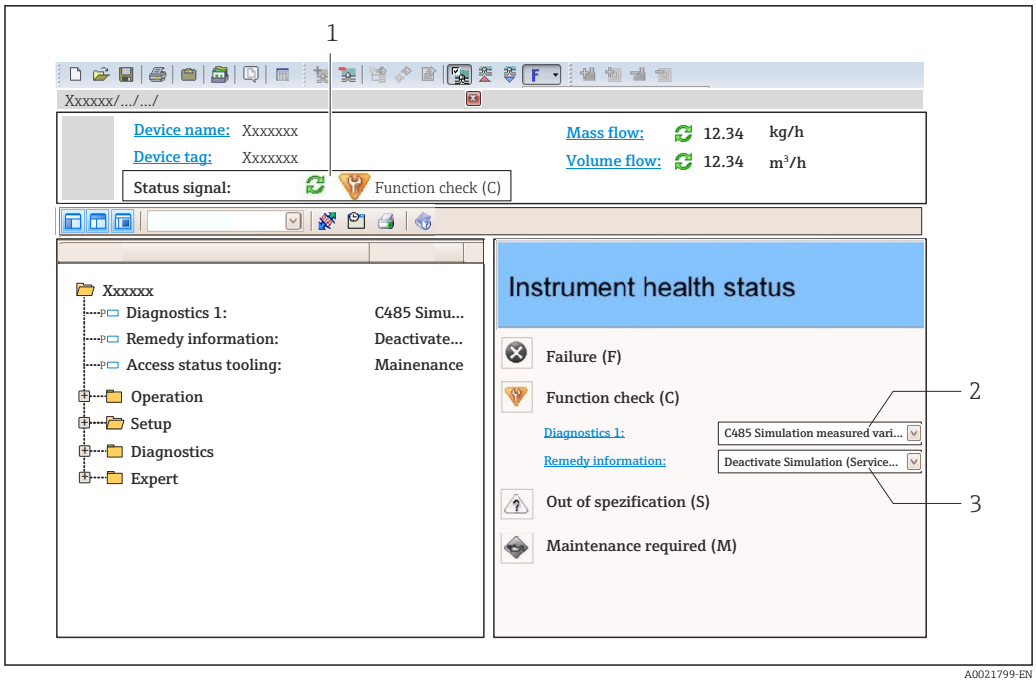

1 *Status area with status signal*
2 *Diagnostic information* → 📄 *83*
3 *Remedy information with Service ID*

In addition, diagnostic events which have occurred can be shown in the **Diagnostics** menu:
- Via parameter
- Via submenu → 📄 101

Diagnostic information

The fault can be identified using the diagnostic information. The short text helps you by providing information about the fault.

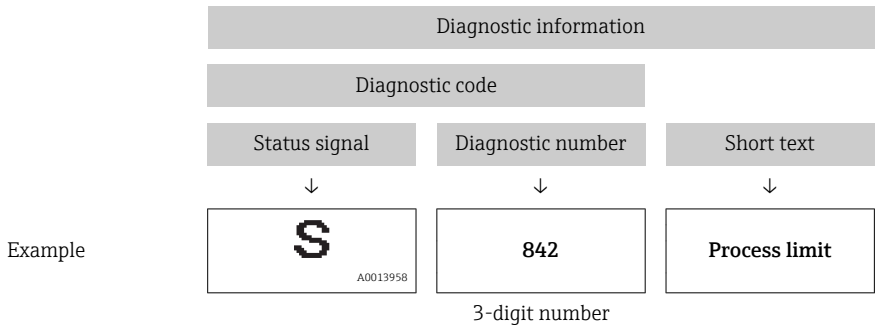

12.4.2 Calling up remedy information

Remedy information is provided for every diagnostic event to ensure that problems can be rectified quickly:
- On the home page
  Remedy information is displayed in a separate field below the diagnostics information.
- In the **Diagnostics** menu
  Remedy information can be called up in the working area of the user interface.

The user is in the **Diagnostics** menu.

1. Call up the desired parameter.

2. On the right in the working area, mouse over the parameter.
   ↳ A tool tip with remedy information for the diagnostic event appears.

12.5 Adapting the diagnostic information

12.5.1 Adapting the diagnostic behavior

Each item of diagnostic information is assigned a specific diagnostic behavior at the factory. The user can change this assignment for specific diagnostic information in the **Diagnostic behavior** submenu.

Expert → System → Diagnostic handling → Diagnostic behavior

Available diagnostic behaviors

The following diagnostic behaviors can be assigned:

Diagnostic behavior	Description
Alarm	The device stops measurement. The totalizers assume the defined alarm condition. A diagnostic message is generated.
Warning	The device continues to measure. The measured value output via PROFINET and the totalizers are not affected. A diagnostic message is generated.
Logbook entry only	The device continues to measure. The diagnostic message is displayed only in the **Event logbook** submenu (**Event list** submenu) and not in alternation with the operational display.
Off	The diagnostic event is ignored, and no diagnostic message is generated or entered.

Displaying the measured value status

If modules with input data (e.g. Analog Input module, Discrete Input module, Totalizer module, Heartbeat module) are configured for cyclic data transmission, the measured value status is coded as per PROFIBUS PA Profile 3.02 Specification and transmitted along with the measured value to the PROFINET Controller via the status byte. The status byte is split into three segments: Quality, Quality Substatus and Limits.

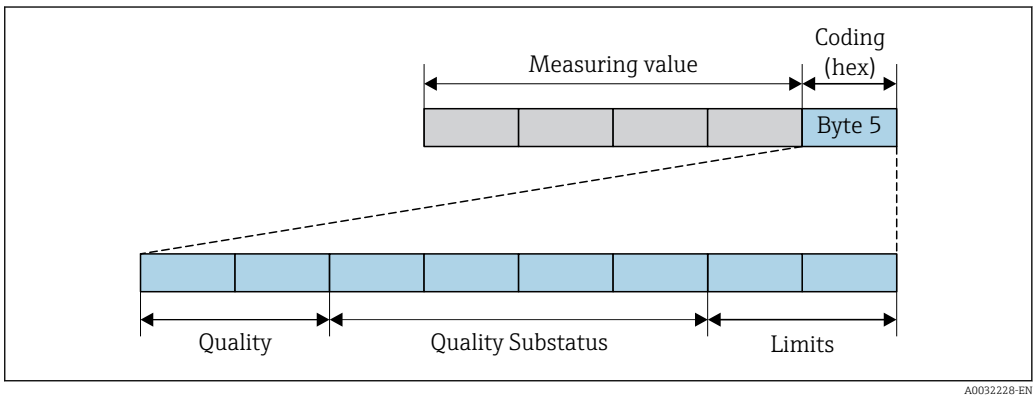

18 *Structure of the status byte*

The content of the status byte depends on the configured failsafe mode in the particular function block. Depending on which failsafe mode has been configured, status information in accordance with PROFIBUS PA Profile Specification 3.02 is transmitted to the the PROFINET controller via the status byte. The two bits for the limits always have the value 0.

Supported status information

Status	Coding (hex)
BAD - Maintenance alarm	0x24
BAD - Process related	0x28
BAD - Function check	0x3C
UNCERTAIN - Initial value	0x4F
UNCERTAIN - Maintenance demanded	0x68
UNCERTAIN - Process related	0x78
GOOD - OK	0x80
GOOD - Maintenance demanded	0xA8
GOOD - Function check	0xBC

Determining the measured value status and device status via the diagnostic behavior

When the diagnostic behavior is assigned, this also changes the measured value status and device status for the diagnostic information. The measured value status and device status depend on the choice of diagnostic behavior and on the group in which the diagnostic information is located. The measured value status and device status are firmly assigned to the particular diagnostic behavior and cannot be changed individually.

The diagnostic information is grouped as follows:
- Diagnostic information pertaining to the sensor: diagnostic number 000 to 199
  → 📄 86
- Diagnostic information pertaining to the electronics: diagnostic number 200 to 399
  → 📄 86
- Diagnostic information pertaining to the configuration: diagnostic number 400 to 599
  → 📄 87
- Diagnostic information pertaining to the process: diagnostic number 800 to 999
  → 📄 87

Depending on the group in which the diagnostic information is located, the following measured value status and device status are firmly assigned to the particular diagnostic behavior:

Diagnostic information pertaining to the sensor: diagnostic number 000 to 199

Diagnostic behavior (configurable)	Measured value status (fixed assignment)				Device diagnosis (fixed assignment)
	Quality	Quality Substatus	Coding (hex)	Category (NE107)	
Alarm	BAD	Maintenance alarm	0x24	F (Failure)	Maintenance alarm
Warning	GOOD	Maintenance demanded	0xA8	M (Maintenance)	Maintenance demanded
Logbook entry only	GOOD	ok	0x80	–	–
Off					

Diagnostic information pertaining to the electronics: diagnostic number 200 to 399

Diagnostic behavior (configurable)	Measured value status (fixed assignment)				Device diagnosis (fixed assignment)
	Quality	Quality Substatus	Coding (hex)	Category (NE107)	
Alarm	BAD	Maintenance alarm	0x24	F (Failure)	Maintenance alarm
Warning					

Diagnostic behavior (configurable)	Measured value status (fixed assignment)				Device diagnosis (fixed assignment)
	Quality	Quality Substatus	Coding (hex)	Category (NE107)	
Logbook entry only	GOOD	ok	0x80	–	–
Off					

Diagnostic information pertaining to the configuration: diagnostic number 400 to 599

Diagnostic behavior (configurable)	Measured value status (fixed assignment)				Device diagnosis (fixed assignment)
	Quality	Quality Substatus	Coding (hex)	Category (NE107)	
Alarm	BAD	Process related	0x28	F (Failure)	Invalid process condition
Warning	UNCERTAIN	Process related	0x78	S (Out of specification)	Invalid process condition
Logbook entry only	GOOD	ok	0x80	–	–
Off					

Diagnostic information pertaining to the process: diagnostic number 800 to 999

Diagnostic behavior (configurable)	Measured value status (fixed assignment)				Device diagnosis (fixed assignment)
	Quality	Quality Substatus	Coding (hex)	Category (NE107)	
Alarm	BAD	Process related	0x28	F (Failure)	Invalid process condition
Warning	UNCERTAIN	Process related	0x78	S (Out of specification)	Invalid process condition
Logbook entry only	GOOD	ok	0x80	–	–
Off					

12.6 Overview of diagnostic information

The amount of diagnostic information and the number of measured variables affected increase if the measuring device has one or more application packages.

In the case of some items of diagnostic information, the diagnostic behavior can be changed. Change the diagnostic information → 85

12.6.1 Diagnostic of sensor

Diagnostic information			Remedy instructions	Influenced measured variables
No.	Short text			
004	Sensor		1. Change sensor 2. Contact service	▪ Mass flow ▪ Volume flow
	Measured variable status			
	Quality	Bad		
	Quality substatus	Maintenance alarm		
	Coding (hex)	0x24 to 0x27		
	Status signal	S		
	Diagnostic behavior	Alarm		

Diagnostic information			Remedy instructions	Influenced measured variables
No.	Short text			
022	Sensor temperature		1. Change main electronic module 2. Change sensor	▪ Conductivity ▪ Corrected conductivity ▪ Electronic temperature ▪ Electronic temperature ▪ Flow velocity ▪ Mass flow ▪ Corrected volume flow ▪ Temperature ▪ Volume flow
	Measured variable status			
	Quality	Bad		
	Quality substatus	Maintenance alarm		
	Coding (hex)	0x24 to 0x27		
	Status signal	F		
	Diagnostic behavior	Alarm		

Diagnostic information			Remedy instructions	Influenced measured variables
No.	Short text			
043	Sensor short circuit		1. Check sensor and cable 2. Change sensor or cable	▪ Mass flow ▪ Volume flow
	Measured variable status			
	Quality	Uncertain		
	Quality substatus	Maintenance demanded		
	Coding (hex)	0x68 to 0x6B		
	Status signal	S		
	Diagnostic behavior	Warning		

Diagnostic information			Remedy instructions	Influenced measured variables
No.	Short text			
062	Sensor connection		1. Check sensor connections 2. Contact service	▪ Conductivity ▪ Corrected conductivity ▪ Density ▪ Flow velocity ▪ Mass flow ▪ Reference density ▪ Corrected volume flow ▪ Temperature ▪ Volume flow
	Measured variable status			
	Quality	Bad		
	Quality substatus	Maintenance alarm		
	Coding (hex)	0x24 to 0x27		
	Status signal	F		
	Diagnostic behavior	Alarm		

Diagnostic information			Remedy instructions	Influenced measured variables
No.	Short text			
082	Data storage		1. Check module connections 2. Contact service	▪ Conductivity ▪ Corrected conductivity ▪ Electronic temperature ▪ Electronic temperature ▪ Flow velocity ▪ Mass flow ▪ Corrected volume flow ▪ Temperature ▪ Volume flow
	Measured variable status			
	Quality	Bad		
	Quality substatus	Maintenance alarm		
	Coding (hex)	0x24 to 0x27		
	Status signal	F		
	Diagnostic behavior	Alarm		

Diagnostic information			Remedy instructions	Influenced measured variables
No.	Short text			
083	Memory content		1. Restart device 2. Contact service	▪ Conductivity ▪ Corrected conductivity ▪ Electronic temperature ▪ Electronic temperature ▪ Flow velocity ▪ Mass flow ▪ Corrected volume flow ▪ Temperature ▪ Volume flow
	Measured variable status			
	Quality	Bad		
	Quality substatus	Maintenance alarm		
	Coding (hex)	0x24 to 0x27		
	Status signal	F		
	Diagnostic behavior	Alarm		

Diagnostic information			Remedy instructions	Influenced measured variables
No.	Short text			
190	Special event 1		Contact service	▪ Conductivity ▪ Corrected conductivity ▪ Density ▪ Flow velocity ▪ Mass flow ▪ Reference density ▪ Corrected volume flow ▪ Temperature ▪ Volume flow
	Measured variable status			
	Quality	Bad		
	Quality substatus	Maintenance alarm		
	Coding (hex)	0x24 to 0x27		
	Status signal	F		
	Diagnostic behavior	Alarm		

12.6.2 Diagnostic of electronic

Diagnostic information			Remedy instructions	Influenced measured variables
No.	Short text			
201	Device failure		1. Restart device 2. Contact service	▪ Conductivity ▪ Corrected conductivity ▪ Density ▪ Flow velocity ▪ Mass flow ▪ Reference density ▪ Corrected volume flow ▪ Temperature ▪ Volume flow
	Measured variable status			
	Quality	Bad		
	Quality substatus	Maintenance alarm		
	Coding (hex)	0x24 to 0x27		
	Status signal	F		
	Diagnostic behavior	Alarm		

Diagnostic information			Remedy instructions	Influenced measured variables
No.	Short text			
222	Electronic drift		Change main electronic module	▪ Mass flow ▪ Volume flow
	Measured variable status			
	Quality	Bad		
	Quality substatus	Maintenance alarm		
	Coding (hex)	0x24 to 0x27		
	Status signal	F		
	Diagnostic behavior	Alarm		

Diagnostic information			Remedy instructions	Influenced measured variables
No.	Short text			
242	Software incompatible		1. Check software 2. Flash or change main electronics module	▪ Conductivity ▪ Corrected conductivity ▪ Electronic temperature ▪ Electronic temperature ▪ Flow velocity ▪ Mass flow ▪ Corrected volume flow ▪ Temperature ▪ Volume flow
	Measured variable status			
	Quality	Bad		
	Quality substatus	Maintenance alarm		
	Coding (hex)	0x24 to 0x27		
	Status signal	F		
	Diagnostic behavior	Alarm		

Diagnostic information			Remedy instructions	Influenced measured variables
No.	Short text			
252	Modules incompatible		1. Check electronic modules 2. Change electronic modules	▪ Conductivity ▪ Corrected conductivity ▪ Electronic temperature ▪ Electronic temperature ▪ Flow velocity ▪ Mass flow ▪ Corrected volume flow ▪ Temperature ▪ Volume flow
	Measured variable status [from the factory] [1]			
	Quality	Good		
	Quality substatus	Ok		
	Coding (hex)	0x80 to 0x83		
	Status signal	F		
	Diagnostic behavior	Alarm		

1) Diagnostic behavior can be changed. This causes the overall status of the measured variable to change.

Diagnostic information			Remedy instructions	Influenced measured variables
No.	Short text			
262	Module connection		1. Check module connections 2. Change main electronics	▪ Conductivity ▪ Corrected conductivity ▪ Density ▪ Flow velocity ▪ Mass flow ▪ Reference density ▪ Corrected volume flow ▪ Temperature ▪ Volume flow
	Measured variable status			
	Quality	Bad		
	Quality substatus	Maintenance alarm		
	Coding (hex)	0x24 to 0x27		
	Status signal	F		
	Diagnostic behavior	Alarm		

Diagnostic information			Remedy instructions	Influenced measured variables
No.	Short text			
270	Main electronic failure		Change main electronic module	▪ Conductivity ▪ Corrected conductivity ▪ Density ▪ Electronic temperature ▪ Electronic temperature ▪ Flow velocity ▪ Mass flow ▪ Reference density ▪ Corrected volume flow ▪ Temperature ▪ Volume flow
	Measured variable status			
	Quality	Bad		
	Quality substatus	Maintenance alarm		
	Coding (hex)	0x24 to 0x27		
	Status signal	F		
	Diagnostic behavior	Alarm		

Diagnostic information			Remedy instructions	Influenced measured variables
No.	Short text			
271	Main electronic failure		1. Restart device 2. Change main electronic module	▪ Conductivity ▪ Corrected conductivity ▪ Electronic temperature ▪ Electronic temperature ▪ Flow velocity ▪ Mass flow ▪ Corrected volume flow ▪ Temperature ▪ Volume flow
	Measured variable status			
	Quality	Bad		
	Quality substatus	Maintenance alarm		
	Coding (hex)	0x24 to 0x27		
	Status signal	F		
	Diagnostic behavior	Alarm		

Diagnostic information			Remedy instructions	Influenced measured variables
No.	Short text			
272	Main electronic failure		1. Restart device 2. Contact service	▪ Conductivity ▪ Corrected conductivity ▪ Electronic temperature ▪ Electronic temperature ▪ Flow velocity ▪ Mass flow ▪ Corrected volume flow ▪ Temperature ▪ Volume flow
	Measured variable status			
	Quality	Bad		
	Quality substatus	Maintenance alarm		
	Coding (hex)	0x24 to 0x27		
	Status signal	F		
	Diagnostic behavior	Alarm		

Diagnostic information			Remedy instructions	Influenced measured variables
No.	Short text			
273	Main electronic failure		Change electronic	▪ Conductivity ▪ Corrected conductivity ▪ Electronic temperature ▪ Electronic temperature ▪ Flow velocity ▪ Mass flow ▪ Corrected volume flow ▪ Temperature ▪ Volume flow
	Measured variable status			
	Quality	Bad		
	Quality substatus	Maintenance alarm		
	Coding (hex)	0x24 to 0x27		
	Status signal	F		
	Diagnostic behavior	Alarm		

Diagnostic information			Remedy instructions	Influenced measured variables
No.	Short text			
281	Electronic initialization		Firmware update active, please wait!	▪ Conductivity ▪ Corrected conductivity ▪ Electronic temperature ▪ Electronic temperature ▪ Flow velocity ▪ Mass flow ▪ Corrected volume flow ▪ Temperature ▪ Volume flow
	Measured variable status			
	Quality	Bad		
	Quality substatus	Maintenance alarm		
	Coding (hex)	0x24 to 0x27		
	Status signal	F		
	Diagnostic behavior	Alarm		

Diagnostic information			Remedy instructions	Influenced measured variables
No.	Short text			
283	Memory content		1. Reset device 2. Contact service	▪ Conductivity ▪ Corrected conductivity ▪ Density ▪ Flow velocity ▪ Mass flow ▪ Reference density ▪ Corrected volume flow ▪ Temperature ▪ Volume flow
	Measured variable status			
	Quality	Bad		
	Quality substatus	Maintenance alarm		
	Coding (hex)	0x24 to 0x27		
	Status signal	F		
	Diagnostic behavior	Alarm		

Diagnostic information			Remedy instructions	Influenced measured variables
No.	Short text			
302	Device verification active		Device verification active, please wait.	▪ Conductivity ▪ Corrected conductivity ▪ Electronic temperature ▪ Electronic temperature ▪ Flow velocity ▪ Mass flow ▪ Corrected volume flow ▪ Temperature ▪ Volume flow
	Measured variable status [from the factory] [1]			
	Quality	Good		
	Quality substatus	Function check		
	Coding (hex)	0xBC to 0xBF		
	Status signal	C		
	Diagnostic behavior	Warning		

1) Diagnostic behavior can be changed. This causes the overall status of the measured variable to change.

Diagnostic information			Remedy instructions	Influenced measured variables
No.	Short text			
311	Electronic failure		1. Reset device 2. Contact service	▪ Conductivity ▪ Corrected conductivity ▪ Electronic temperature ▪ Electronic temperature ▪ Flow velocity ▪ Mass flow ▪ Corrected volume flow ▪ Temperature ▪ Volume flow
	Measured variable status			
	Quality	Bad		
	Quality substatus	Maintenance alarm		
	Coding (hex)	0x24 to 0x27		
	Status signal	F		
	Diagnostic behavior	Alarm		

Diagnostic information			Remedy instructions	Influenced measured variables
No.	Short text			
311	Electronic failure		1. Do not reset device 2. Contact service	▪ Conductivity ▪ Corrected conductivity ▪ Electronic temperature ▪ Electronic temperature ▪ Flow velocity ▪ Mass flow ▪ Corrected volume flow ▪ Temperature ▪ Volume flow
	Measured variable status			
	Quality	Bad		
	Quality substatus	Maintenance alarm		
	Coding (hex)	0x24 to 0x27		
	Status signal	M		
	Diagnostic behavior	Warning		

Diagnostic information			Remedy instructions	Influenced measured variables
No.	Short text			
322	Electronic drift		1. Perform verification manually 2. Change electronic	▪ Conductivity ▪ Corrected conductivity ▪ Density ▪ Flow velocity ▪ Mass flow ▪ Reference density ▪ Corrected volume flow ▪ Temperature ▪ Volume flow
	Measured variable status			
	Quality	Uncertain		
	Quality substatus	Maintenance demanded		
	Coding (hex)	0x68 to 0x6B		
	Status signal	S		
	Diagnostic behavior	Warning		

Diagnostic information			Remedy instructions	Influenced measured variables
No.	Short text			
382	Data storage		1. Insert DAT module 2. Change DAT module	▪ Conductivity ▪ Corrected conductivity ▪ Density ▪ Flow velocity ▪ Mass flow ▪ Reference density ▪ Corrected volume flow ▪ Temperature ▪ Volume flow
	Measured variable status			
	Quality	Bad		
	Quality substatus	Maintenance alarm		
	Coding (hex)	0x24 to 0x27		
	Status signal	F		
	Diagnostic behavior	Alarm		

Diagnostic information			Remedy instructions	Influenced measured variables
No.	Short text			
383	Memory content		1. Restart device 2. Check or change DAT module 3. Contact service	▪ Conductivity ▪ Corrected conductivity ▪ Density ▪ Flow velocity ▪ Mass flow ▪ Reference density ▪ Corrected volume flow ▪ Temperature ▪ Volume flow
	Measured variable status			
	Quality	Bad		
	Quality substatus	Maintenance alarm		
	Coding (hex)	0x24 to 0x27		
	Status signal	F		
	Diagnostic behavior	Alarm		

Diagnostic information			Remedy instructions	Influenced measured variables
No.	Short text			
390	Special event 2		Contact service	▪ Conductivity ▪ Corrected conductivity ▪ Density ▪ Flow velocity ▪ Mass flow ▪ Reference density ▪ Corrected volume flow ▪ Temperature ▪ Volume flow
	Measured variable status			
	Quality	Bad		
	Quality substatus	Maintenance alarm		
	Coding (hex)	0x24 to 0x27		
	Status signal	F		
	Diagnostic behavior	Alarm		

12.6.3 Diagnostic of configuration

Diagnostic information			Remedy instructions	Influenced measured variables
No.	Short text			
410	Data transfer		1. Check connection 2. Retry data transfer	▪ Conductivity ▪ Corrected conductivity ▪ Electronic temperature ▪ Electronic temperature ▪ Flow velocity ▪ Mass flow ▪ Corrected volume flow ▪ Temperature ▪ Volume flow
	Measured variable status			
	Quality	Bad		
	Quality substatus	Maintenance alarm		
	Coding (hex)	0x24 to 0x27		
	Status signal	F		
	Diagnostic behavior	Alarm		

Diagnostic information			Remedy instructions	Influenced measured variables
No.	Short text			
412	Processing download		Download active, please wait	▪ Conductivity ▪ Corrected conductivity ▪ Electronic temperature ▪ Electronic temperature ▪ Flow velocity ▪ Mass flow ▪ Corrected volume flow ▪ Temperature ▪ Volume flow
	Measured variable status			
	Quality	Uncertain		
	Quality substatus	Initial value		
	Coding (hex)	0x4C to 0x4F		
	Status signal	C		
	Diagnostic behavior	Warning		

Diagnostic information			Remedy instructions	Influenced measured variables
No.	Short text			
437	Configuration incompatible		1. Restart device 2. Contact service	▪ Conductivity ▪ Corrected conductivity ▪ Electronic temperature ▪ Electronic temperature ▪ Flow velocity ▪ Mass flow ▪ Corrected volume flow ▪ Temperature ▪ Volume flow
	Measured variable status			
	Quality	Bad		
	Quality substatus	Maintenance alarm		
	Coding (hex)	0x24 to 0x27		
	Status signal	F		
	Diagnostic behavior	Alarm		

Diagnostic information			Remedy instructions	Influenced measured variables
No.	Short text			
438	Dataset		1. Check data set file 2. Check device configuration 3. Up- and download new configuration	▪ Conductivity ▪ Corrected conductivity ▪ Electronic temperature ▪ Electronic temperature ▪ Flow velocity ▪ Mass flow ▪ Corrected volume flow ▪ Temperature ▪ Volume flow
	Measured variable status			
	Quality	Uncertain		
	Quality substatus	Maintenance demanded		
	Coding (hex)	0x68 to 0x6B		
	Status signal	M		
	Diagnostic behavior	Warning		

Diagnostic information			Remedy instructions	Influenced measured variables
No.	Short text			
453	Flow override		Deactivate flow override	▪ Conductivity ▪ Corrected conductivity ▪ Electronic temperature ▪ Electronic temperature ▪ Flow velocity ▪ Mass flow ▪ Corrected volume flow ▪ Temperature ▪ Volume flow
	Measured variable status			
	Quality	Good		
	Quality substatus	Function check		
	Coding (hex)	0xBC to 0xBF		
	Status signal	C		
	Diagnostic behavior	Warning		

Diagnostic information			Remedy instructions	Influenced measured variables
No.	Short text			
484	Simulation Failure Mode		Deactivate simulation	▪ Conductivity ▪ Corrected conductivity ▪ Electronic temperature ▪ Electronic temperature ▪ Flow velocity ▪ Mass flow ▪ Corrected volume flow ▪ Temperature ▪ Status ▪ Volume flow
	Measured variable status			
	Quality	Bad		
	Quality substatus	Function check		
	Coding (hex)	0x3C to 0x3F		
	Status signal	C		
	Diagnostic behavior	Alarm		

Diagnostic information			Remedy instructions	Influenced measured variables
No.	Short text			
485	Simulation measured variable		Deactivate simulation	▪ Conductivity ▪ Corrected conductivity ▪ Electronic temperature ▪ Electronic temperature ▪ Flow velocity ▪ Mass flow ▪ Corrected volume flow ▪ Temperature ▪ Volume flow
	Measured variable status			
	Quality	Good		
	Quality substatus	Function check		
	Coding (hex)	0xBC to 0xBF		
	Status signal	C		
	Diagnostic behavior	Warning		

Diagnostic information			Remedy instructions	Influenced measured variables
No.	Short text			
495	Diagnostic event simulation		Deactivate simulation	–
	Measured variable status			
	Quality	Good		
	Quality substatus	Ok		
	Coding (hex)	0x80 to 0x83		
	Status signal	C		
	Diagnostic behavior	Warning		

Diagnostic information			Remedy instructions	Influenced measured variables
No.	Short text			
500	Electrode 1 potential exceeded		1. Check process cond. 2. Increase system pressure	▪ Mass flow ▪ Volume flow
	Measured variable status			
	Quality	Uncertain		
	Quality substatus	Maintenance demanded		
	Coding (hex)	0x68 to 0x6B		
	Status signal	F		
	Diagnostic behavior	Alarm		

Diagnostic information			Remedy instructions	Influenced measured variables
No.	Short text			
500	Electrode difference voltage too high		1. Check process cond. 2. Increase system pressure	▪ Mass flow ▪ Volume flow
	Measured variable status			
	Quality	Uncertain		
	Quality substatus	Maintenance demanded		
	Coding (hex)	0x68 to 0x6B		
	Status signal	F		
	Diagnostic behavior	Alarm		

Diagnostic information			Remedy instructions	Influenced measured variables
No.	Short text			
530	Electrode cleaning is running		1. Check process cond. 2. Increase system pressure	▪ Conductivity ▪ Corrected conductivity ▪ Flow velocity ▪ Mass flow ▪ Corrected volume flow ▪ Temperature ▪ Volume flow
	Measured variable status			
	Quality	Good		
	Quality substatus	Function check		
	Coding (hex)	0xBC to 0xBF		
	Status signal	C		
	Diagnostic behavior	Warning		

Diagnostic information			Remedy instructions	Influenced measured variables
No.	Short text			
531	Empty pipe detection		Execute EPD adjustment	▪ Conductivity ▪ Corrected conductivity ▪ Electronic temperature ▪ Electronic temperature ▪ Flow velocity ▪ Mass flow ▪ Corrected volume flow ▪ Temperature ▪ Volume flow
	Measured variable status [from the factory] 1)			
	Quality	Good		
	Quality substatus	Ok		
	Coding (hex)	0x80 to 0x83		
	Status signal	S		
	Diagnostic behavior	Warning		

1) Diagnostic behavior can be changed. This causes the overall status of the measured variable to change.

Diagnostic information			Remedy instructions	Influenced measured variables
No.	Short text			
537	Configuration		1. Check IP addresses in network 2. Change IP address	–
	Measured variable status			
	Quality	Good		
	Quality substatus	Ok		
	Coding (hex)	0x80 to 0x83		
	Status signal	F		
	Diagnostic behavior	Warning		

Diagnostic information			Remedy instructions	Influenced measured variables
No.	Short text			
590	Special event 3		Contact service	▪ Conductivity ▪ Corrected conductivity ▪ Density ▪ Flow velocity ▪ Mass flow ▪ Reference density ▪ Corrected volume flow ▪ Temperature ▪ Volume flow
	Measured variable status			
	Quality	Bad		
	Quality substatus	Maintenance alarm		
	Coding (hex)	0x24 to 0x27		
	Status signal	F		
	Diagnostic behavior	Alarm		

12.6.4 Diagnostic of process

Diagnostic information			Remedy instructions	Influenced measured variables
No.	Short text			
832	Electronic temperature too high		Reduce ambient temperature	▪ Conductivity ▪ Corrected conductivity ▪ Electronic temperature ▪ Electronic temperature ▪ Flow velocity ▪ Mass flow ▪ Corrected volume flow ▪ Temperature ▪ Volume flow
	Measured variable status [from the factory] 1)			
	Quality	Good		
	Quality substatus	Ok		
	Coding (hex)	0x80 to 0x83		
	Status signal	S		
	Diagnostic behavior	Warning		

1) Diagnostic behavior can be changed. This causes the overall status of the measured variable to change.

Diagnostic information			Remedy instructions	Influenced measured variables
No.	Short text			
833	Electronic temperature too low		Increase ambient temperature	▪ Conductivity ▪ Corrected conductivity ▪ Electronic temperature ▪ Electronic temperature ▪ Flow velocity ▪ Mass flow ▪ Corrected volume flow ▪ Temperature ▪ Volume flow
	Measured variable status [from the factory] 1)			
	Quality	Good		
	Quality substatus	Ok		
	Coding (hex)	0x80 to 0x83		
	Status signal	S		
	Diagnostic behavior	Warning		

1) Diagnostic behavior can be changed. This causes the overall status of the measured variable to change.

Diagnostic information			Remedy instructions	Influenced measured variables
No.	Short text			
834	Process temperature too high		Reduce process temperature	▪ Conductivity ▪ Corrected conductivity ▪ Electronic temperature ▪ Electronic temperature ▪ Flow velocity ▪ Mass flow ▪ Corrected volume flow ▪ Temperature ▪ Volume flow
	Measured variable status [from the factory] 1)			
	Quality	Good		
	Quality substatus	Ok		
	Coding (hex)	0x80 to 0x83		
	Status signal	S		
	Diagnostic behavior	Warning		

1) Diagnostic behavior can be changed. This causes the overall status of the measured variable to change.

Diagnostic information			Remedy instructions	Influenced measured variables
No.	Short text			
835	Process temperature too low		Increase process temperature	▪ Conductivity ▪ Corrected conductivity ▪ Electronic temperature ▪ Electronic temperature ▪ Flow velocity ▪ Mass flow ▪ Corrected volume flow ▪ Temperature ▪ Volume flow
	Measured variable status [from the factory] 1)			
	Quality	Good		
	Quality substatus	Ok		
	Coding (hex)	0x80 to 0x83		
	Status signal	S		
	Diagnostic behavior	Warning		

1) Diagnostic behavior can be changed. This causes the overall status of the measured variable to change.

Diagnostic information			Remedy instructions	Influenced measured variables
No.	Short text			
842	Process limit		Low flow cut off active! 1. Check low flow cut off configuration	▪ Mass flow ▪ Volume flow
	Measured variable status			
	Quality	Good		
	Quality substatus	Ok		
	Coding (hex)	0x80 to 0x83		
	Status signal	S		
	Diagnostic behavior	Warning		

Diagnostic information			Remedy instructions	Influenced measured variables
No.	Short text			
862	Empty pipe		1. Check for gas in process 2. Adjust empty pipe detection	▪ Conductivity ▪ Corrected conductivity ▪ Electronic temperature ▪ Electronic temperature ▪ Flow velocity ▪ Mass flow ▪ Corrected volume flow ▪ Temperature ▪ Volume flow
	Measured variable status [from the factory] 1)			
	Quality	Good		
	Quality substatus	Ok		
	Coding (hex)	0x80 to 0x83		
	Status signal	S		
	Diagnostic behavior	Warning		

1) Diagnostic behavior can be changed. This causes the overall status of the measured variable to change.

Diagnostic information			Remedy instructions	Influenced measured variables
No.	Short text			
882	Input signal		1. Check input configuration 2. Check external device or process conditions	▪ Mass flow ▪ Volume flow
	Measured variable status			
	Quality	Bad		
	Quality substatus	Maintenance alarm		
	Coding (hex)	0x24 to 0x27		
	Status signal	F		
	Diagnostic behavior	Alarm		

Diagnostic information			Remedy instructions	Influenced measured variables
No.	Short text			
937	EMC interference		Change main electronic module	▪ Conductivity ▪ Corrected conductivity ▪ Electronic temperature ▪ Electronic temperature ▪ Flow velocity ▪ Mass flow ▪ Corrected volume flow ▪ Temperature ▪ Volume flow
	Measured variable status [from the factory] 1)			
	Quality	Good		
	Quality substatus	Ok		
	Coding (hex)	0x80 to 0x83		
	Status signal	S		
	Diagnostic behavior	Warning		

1) Diagnostic behavior can be changed. This causes the overall status of the measured variable to change.

Diagnostic information			Remedy instructions	Influenced measured variables
No.	Short text			
938	EMC interference		1. Check ambient conditions regarding EMC influence 2. Change main electronic module	▪ Conductivity ▪ Corrected conductivity ▪ Electronic temperature ▪ Electronic temperature ▪ Flow velocity ▪ Mass flow ▪ Corrected volume flow ▪ Temperature ▪ Volume flow
	Measured variable status			
	Quality	Good		
	Quality substatus	Ok		
	Coding (hex)	0x80 to 0x83		
	Status signal	F		
	Diagnostic behavior	Alarm		

Diagnostic information			Remedy instructions	Influenced measured variables
No.	Short text			
990	Special event 4		Contact service	▪ Conductivity ▪ Corrected conductivity ▪ Density ▪ Flow velocity ▪ Mass flow ▪ Reference density ▪ Corrected volume flow ▪ Temperature ▪ Volume flow
	Measured variable status			
	Quality	Bad		
	Quality substatus	Maintenance alarm		
	Coding (hex)	0x24 to 0x27		
	Status signal	F		
	Diagnostic behavior	Alarm		

12.7 Pending diagnostic events

The **Diagnostics** menu allows the user to view the current diagnostic event and the previous diagnostic event separately.

To call up the measures to rectify a diagnostic event:
- Via Web browser → 📄 83
- Via "FieldCare" operating tool → 📄 84
- Via "DeviceCare" operating tool → 📄 84

Other pending diagnostic events can be displayed in the **Diagnostic list** submenu → 📄 101

Navigation
"Diagnostics" menu

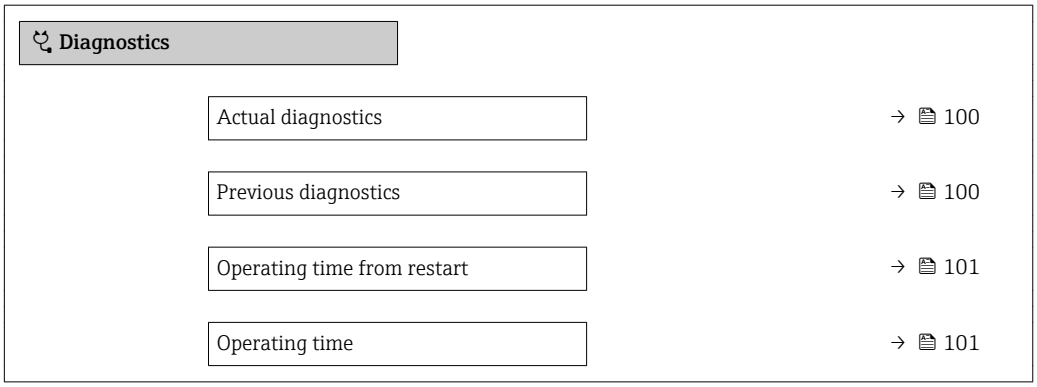

Parameter overview with brief description

Parameter	Prerequisite	Description	User interface
Actual diagnostics	A diagnostic event has occurred.	Shows the current occured diagnostic event along with its diagnostic information. If two or more messages occur simultaneously, the message with the highest priority is shown on the display.	Symbol for diagnostic behavior, diagnostic code and short message.
Previous diagnostics	Two diagnostic events have already occurred.	Shows the diagnostic event that occurred prior to the current diagnostic event along with its diagnostic information.	Symbol for diagnostic behavior, diagnostic code and short message.

Parameter	Prerequisite	Description	User interface
Operating time from restart	–	Shows the time the device has been in operation since the last device restart.	Days (d), hours (h), minutes (m) and seconds (s)
Operating time	–	Indicates how long the device has been in operation.	Days (d), hours (h), minutes (m) and seconds (s)

12.8 Diagnostic list

Up to 5 currently pending diagnostic events can be displayed in the **Diagnostic list** submenu along with the associated diagnostic information. If more than 5 diagnostic events are pending, the events with the highest priority are shown on the display.

Navigation path
Diagnostics → Diagnostic list

To call up the measures to rectify a diagnostic event:
- Via Web browser → 📄 83
- Via "FieldCare" operating tool → 📄 84
- Via "DeviceCare" operating tool → 📄 84

12.9 Event logbook

12.9.1 Reading out the event logbook

A chronological overview of the event messages that have occurred is provided in the **Events list** submenu.

Navigation path
Diagnostics menu → **Event logbook** submenu → Event list

A maximum of 20 event messages can be displayed in chronological order.

The event history includes entries for:
- Diagnostic events → 📄 87
- Information events → 📄 102

In addition to the operation time of its occurrence, each event is also assigned a symbol that indicates whether the event has occurred or is ended:
- Diagnostic event
  - ⊖: Occurrence of the event
  - ⊖: End of the event
- Information event
  ⊖: Occurrence of the event

To call up the measures to rectify a diagnostic event:
- Via Web browser → 📄 83
- Via "FieldCare" operating tool → 📄 84
- Via "DeviceCare" operating tool → 📄 84

For filtering the displayed event messages → 📄 101

12.9.2 Filtering the event logbook

Using the **Filter options** parameter you can define which category of event message is displayed in the **Events list** submenu.

Navigation path
Diagnostics → Event logbook → Filter options

Filter categories
- All
- Failure (F)
- Function check (C)
- Out of specification (S)
- Maintenance required (M)
- Information (I)

12.9.3 Overview of information events

Unlike a diagnostic event, an information event is displayed in the event logbook only and not in the diagnostic list.

Info number	Info name
I1000	--------(Device ok)
I1089	Power on
I1090	Configuration reset
I1091	Configuration changed
I1137	Electronic changed
I1151	History reset
I1155	Reset electronic temperature
I1157	Memory error event list
I1185	Display backup done
I1186	Restore via display done
I1187	Settings downloaded with display
I1188	Display data cleared
I1189	Backup compared
I1256	Display: access status changed
I1335	Firmware changed
I1351	Empty pipe detection adjustment failure
I1353	Empty pipe detection adjustment ok
I1361	Web server login failed
I1397	Fieldbus: access status changed
I1398	CDI: access status changed
I1444	Device verification passed
I1445	Device verification failed
I1457	Measured error verification failed
I1459	I/O module verification failed
I1461	Sensor verification failed
I1462	Sensor electronic module verific. failed
I1512	Download started
I1513	Download finished
I1514	Upload started
I1515	Upload finished
I1627	Web server login successful
I1631	Web server access changed

Info number	Info name
I1649	Hardware write protection activated
I1650	Hardware write protection deactivated

12.10 Resetting the measuring device

Using the**Device reset** parameter (→ 📄 71) it is possible to reset the entire device configuration or some of the configuration to a defined state.

12.10.1 Function scope of the "Device reset" parameter

Options	Description
Cancel	No action is executed and the user exits the parameter.
To delivery settings	Every parameter for which a customer-specific default setting was ordered is reset to this customer-specific value. All other parameters are reset to the factory setting. ℹ This option is not visible if no customer-specific settings have been ordered.
Restart device	The restart resets every parameter whose data are in the volatile memory (RAM) to the factory setting (e.g. measured value data). The device configuration remains unchanged.

12.11 Device information

The **Device information** submenu contains all parameters that display different information for device identification.

Navigation
"Diagnostics" menu → Device information

▶ Device information	
Device tag	→ 📄 104
Serial number	→ 📄 104
Firmware version	→ 📄 104
Device name	
Order code	→ 📄 104
Extended order code 1	→ 📄 104
Extended order code 2	→ 📄 104
Extended order code 3	→ 📄 104
ENP version	→ 📄 104

Parameter overview with brief description

Parameter	Description	User interface	Factory setting
Device tag	Shows name of measuring point.	Max. 32 characters such as lower-case letters or numbers.	eh-promag100-xxxxx
Serial number	Shows the serial number of the measuring device.	A maximum of 11-digit character string comprising letters and numbers.	–
Firmware version	Shows the device firmware version installed.	Character string in the format xx.yy.zz	–
Device name	Shows the name of the transmitter. The name can be found on the nameplate of the transmitter.		–
Order code	Shows the device order code. The order code can be found on the nameplate of the sensor and transmitter in the "Order code" field.	Character string composed of letters, numbers and certain punctuation marks (e.g. /).	–
Extended order code 1	Shows the 1st part of the extended order code. The extended order code can also be found on the nameplate of the sensor and transmitter in the "Ext. ord. cd." field.	Character string	–
Extended order code 2	Shows the 2nd part of the extended order code. The extended order code can also be found on the nameplate of the sensor and transmitter in the "Ext. ord. cd." field.	Character string	–
Extended order code 3	Shows the 3rd part of the extended order code. The extended order code can also be found on the nameplate of the sensor and transmitter in the "Ext. ord. cd." field.	Character string	–
ENP version	Shows the version of the electronic nameplate (ENP).	Character string	2.02.00

12.12 Firmware history

Release date	Firmware version	Order code for "Firmware version"	Firmware Changes	Documentation type	Documentation
12.2015	01.00.zz	Option **70**	Original firmware	Operating Instructions	BA01422D/06/EN/01.15

It is possible to flash the firmware to the current version using the service interface.

For the compatibility of the firmware version with the installed device description files and operating tools, observe the information about the device in the "Manufacturer's information" document.

The manufacturer's information is available:
- In the Download Area of the Endress+Hauser web site: www.endress.com → Downloads
- Specify the following details:
  - Product root: e.g. 5H1B
    The product root is the first part of the order code: see the nameplate on the device.
  - Text search: Manufacturer's information
  - Media type: Documentation – Technical Documentation

13 Maintenance

13.1 Maintenance tasks

No special maintenance work is required.

13.1.1 Exterior cleaning

When cleaning the exterior of measuring devices, always use cleaning agents that do not attack the surface of the housing or the seals.

13.1.2 Interior cleaning

No interior cleaning is planned for the device.

13.1.3 Replacing seals

The sensor's seals (particularly aseptic molded seals) must be replaced periodically.

The interval between changes depends on the frequency of the cleaning cycles, the cleaning temperature and the medium temperature.

Replacement seals (accessory part) → 🗎 130

13.2 Measuring and test equipment

Endress+Hauser offers a wide variety of measuring and test equipment, such as W@M or device tests.

Your Endress+Hauser Sales Center can provide detailed information on the services.

List of some of the measuring and testing equipment: → 🗎 109

13.3 Endress+Hauser services

Endress+Hauser offers a wide variety of services for maintenance such as recalibration, maintenance service or device tests.

Your Endress+Hauser Sales Center can provide detailed information on the services.

14 Repairs

14.1 General notes

14.1.1 Repair and conversion concept

The Endress+Hauser repair and conversion concept provides for the following:
- The measuring devices have a modular design.
- Spare parts are grouped into logical kits with the associated Installation Instructions.
- Repairs are carried out by Endress+Hauser Service or by appropriately trained customers.
- Certified devices can only be converted to other certified devices by Endress+Hauser Service or at the factory.

14.1.2 Notes for repair and conversion

For repair and modification of a measuring device, observe the following notes:
- ▶ Use only original Endress+Hauser spare parts.
- ▶ Carry out the repair according to the Installation Instructions.
- ▶ Observe the applicable standards, federal/national regulations, Ex documentation (XA) and certificates.
- ▶ Document every repair and each conversion and enter them into the *W@M* life cycle management database.

14.2 Spare parts

W@M Device Viewer (www.endress.com/deviceviewer):
All the spare parts for the measuring device, along with the order code, are listed here and can be ordered. If available, users can also download the associated Installation Instructions.

Measuring device serial number:
- Is located on the nameplate of the device.
- Can be read out via the **Serial number** parameter (→ 📖 104) in the **Device information** submenu.

14.3 Endress+Hauser services

Endress+Hauser offers a wide range of services.

Your Endress+Hauser Sales Center can provide detailed information on the services.

14.4 Return

The measuring device must be returned if it is need of repair or a factory calibration, or if the wrong measuring device has been delivered or ordered. Legal specifications require Endress+Hauser, as an ISO-certified company, to follow certain procedures when handling products that are in contact with the medium.

To ensure safe, swift and professional device returns, please refer to the procedure and conditions for returning devices provided on the Endress+Hauser website at http://www.endress.com/support/return-material

14.5 Disposal

14.5.1 Removing the measuring device

1. Switch off the device.

⚠ WARNING

Danger to persons from process conditions.

- Beware of hazardous process conditions such as pressure in the measuring device, high temperatures or aggressive fluids.

2. Carry out the mounting and connection steps from the "Mounting the measuring device" and "Connecting the measuring device" sections in reverse order. Observe the safety instructions.

14.5.2 Disposing of the measuring device

⚠ WARNING

Danger to personnel and environment from fluids that are hazardous to health.

- Ensure that the measuring device and all cavities are free of fluid residues that are hazardous to health or the environment, e.g. substances that have permeated into crevices or diffused through plastic.

Observe the following notes during disposal:

- Observe valid federal/national regulations.
- Ensure proper separation and reuse of the device components.

15 Accessories

Various accessories, which can be ordered with the device or subsequently from Endress+Hauser, are available for the device. Detailed information on the order code in question is available from your local Endress+Hauser sales center or on the product page of the Endress+Hauser website: www.endress.com.

15.1 Device-specific accessories

15.1.1 For the transmitter

Accessories	Description
Ground cable	Set, consisting of two ground cables for potential equalization.

15.1.2 For the sensor

Accessories	Description
Ground disks	Are used to ground the medium in lined measuring tubes to ensure proper measurement. For details, see Installation Instructions EA00070D

15.2 Communication-specific accessories

Accessories	Description
Commubox FXA291	Connects Endress+Hauser field devices with a CDI interface (= Endress+Hauser Common Data Interface) and the USB port of a computer or laptop. For details, see the "Technical Information" document TI405C/07
Field Xpert SFX350	Field Xpert SFX350 is a mobile computer for commissioning and maintenance. It enables efficient device configuration and diagnostics for and can be used in non-hazardous areas. For details, see Operating Instructions BA01202S
Field Xpert SFX370	Field Xpert SFX370 is a mobile computer for commissioning and maintenance. It enables efficient device configuration and diagnostics for and can be used in the non-hazardous area and in the hazardous area. For details, see Operating Instructions BA01202S

15.3 Service-specific accessories

Accessories	Description
Applicator	Software for selecting and sizing Endress+Hauser measuring devices: ▪ Choice of measuring devices for industrial requirements ▪ Calculation of all the necessary data for identifying the optimum flowmeter: e.g. nominal diameter, pressure loss, flow velocity and accuracy. ▪ Graphic illustration of the calculation results ▪ Determination of the partial order code, administration, documentation and access to all project-related data and parameters over the entire life cycle of a project. Applicator is available: ▪ Via the Internet: https://wapps.endress.com/applicator ▪ As a downloadable DVD for local PC installation.
W@M	W@M Life Cycle Management Improved productivity with information at your fingertips. Data relevant to a plant and its components is generated from the first stages of planning and during the asset's complete life cycle. W@M Life Cycle Management is an open and flexible information platform with online and on-site tools. Instant access for your staff to current, in-depth data shortens your plant's engineering time, speeds up procurement processes and increases plant uptime. Combined with the right services, W@M Life Cycle Management boosts productivity in every phase. For more information, visit www.endress.com/lifecyclemanagement
FieldCare	FDT-based plant asset management tool from Endress+Hauser. It can configure all smart field units in your system and helps you manage them. By using the status information, it is also a simple but effective way of checking their status and condition. For details, see Operating Instructions BA00027S and BA00059S
DeviceCare	Tool for connecting and configuring Endress+Hauser field devices. For details, see Innovation brochure IN01047S

15.4 System components

Accessories	Description
Memograph M graphic data manager	The Memograph M graphic data manager provides information on all the relevant measured variables. Measured values are recorded correctly, limit values are monitored and measuring points analyzed. The data are stored in the 256 MB internal memory and also on a SD card or USB stick. For details, see "Technical Information" TI00133R and Operating Instructions BA00247R

16 Technical data

16.1 Application

The measuring device is only suitable for flow measurement of liquids with a minimum conductivity of 5 µS/cm.

Depending on the version ordered, the measuring device can also measure potentially explosive, flammable, poisonous and oxidizing media.

To ensure that the device remains in proper operating condition for its service life, use the measuring device only for media against which the process-wetted materials are sufficiently resistant.

16.2 Function and system design

Measuring principle	Electromagnetic flow measurement on the basis of *Faraday's law of magnetic induction*.
Measuring system	The device consists of a transmitter and a sensor. The device is available as a compact version: The transmitter and sensor form a mechanical unit. For information on the structure of the device → 📄 12

16.3 Input

Measured variable	**Direct measured variables** ▪ Volume flow (proportional to induced voltage) ▪ Electrical conductivity **Calculated measured variables** ▪ Mass flow ▪ Corrected volume flow
Measuring range	Typically v = 0.01 to 10 m/s (0.03 to 33 ft/s) with the specified accuracy Electrical conductivity: ≥ 5 µS/cm for liquids in general **Recommended measuring range** "Flow limit" section → 📄 121
Operable flow range	Over 1000 : 1

Input signal

External measured values

To increase the accuracy of certain measured variables or to calculate the corrected volume flow, the automation system can continuously write different measured values to the measuring device:
- Operating pressure to increase accuracy (Endress+Hauser recommends the use of a pressure measuring device for absolute pressure, e.g. Cerabar M or Cerabar S)
- Medium temperature to increase accuracy (e.g. iTEMP)
- Reference density for calculating the corrected volume flow

Various pressure transmitters and temperature measuring devices can be ordered from Endress+Hauser: see "Accessories" section → 110

It is recommended to read in external measured values to calculate the following measured variables:
Corrected volume flow

Digital communication

The measured values are written from the automation system to the measuring device via PROFINET.

16.4 Output

Output signal

PROFINET

Standards	In accordance with IEEE 802.3

Signal on alarm

Depending on the interface, failure information is displayed as follows:

Current output 4 to 20 mA

4 to 20 mA

Failure mode	Choose from: ▪ 4 to 20 mA in accordance with NAMUR recommendation NE 43 ▪ 4 to 20 mA in accordance with US ▪ Min. value: 3.59 mA ▪ Max. value: 22.5 mA ▪ Freely definable value between: 3.59 to 22.5 mA ▪ Actual value ▪ Last valid value

Pulse/frequency/switch output

Pulse output	
Failure mode	Choose from: ▪ Actual value ▪ No pulses
Frequency output	
Failure mode	Choose from: ▪ Actual value ▪ 0 Hz ▪ Defined value: 0 to 12 500 Hz

Switch output	
Failure mode	Choose from: ▪ Current status ▪ Open ▪ Closed

PROFINET

Device diagnostics	According to "Application Layer protocol for decentralized periphery", Version 2.3

Local display

Plain text display	With information on cause and remedial measures
Backlight	Red backlighting indicates a device error.

Status signal as per NAMUR recommendation NE 107

Interface/protocol

- Via digital communication:
  PROFINET
- Via service interface
  CDI-RJ45 service interface

Plain text display	With information on cause and remedial measures

Web server

Plain text display	With information on cause and remedial measures

Light emitting diodes (LED)

Status information	Status indicated by various light emitting diodes The following information is displayed depending on the device version: ▪ Supply voltage active ▪ Data transmission active ▪ Device alarm/error has occurred ▪ PROFINET network available ▪ PROFINET connection established ▪ PROFINET blinking feature Diagnostic information via light emitting diodes

Low flow cut off

The switch points for low flow cut off are user-selectable.

Galvanic isolation

The following connections are galvanically isolated from each other:
- Outputs
- Power supply

Protocol-specific data

Protocol-specific data

Protocol	"Application layer protocol for decentral device periphery and distributed automation", version 2.3
Conformity class	B
Communication type	100 MBit/s
Device profile	Application interface identifier 0xF600 Generic device
Manufacturer ID	0x11
Device type ID	0x843A
Device description files (GSD, DTM)	Information and files under: ▪ www.endress.com On the product page for the device: Documents/Software → Device drivers ▪ www.profibus.org
Baud rates	Automatic 100 Mbit/s with full-duplex detection
Cycle times	From 8 ms
Polarity	Auto-polarity for automatic correction of crossed TxD and RxD pairs
Supported connections	▪ 1 x AR (Application Relation) ▪ 1 x Input CR (Communication Relation) ▪ 1 x Output CR (Communication Relation) ▪ 1 x Alarm CR (Communication Relation)
Configuration options for measuring device	▪ DIP switches on the electronics module, for device name assignment (last part) ▪ Manufacturer-specific software (FieldCare, DeviceCare) ▪ Web browser ▪ Device master file (GSD), can be read out via the integrated Web server of the measuring device
Configuration of the device name	▪ DIP switches on the electronics module, for device name assignment (last part) ▪ DCP protocol
Output values (from measuring device to automation system)	**Analog Input module (slot 1 to 10)** ▪ Volume flow ▪ Mass flow ▪ Corrected volume flow ▪ Flow velocity ▪ Conductivity ▪ Corrected conductivity ▪ Temperature ▪ Electronic temperature **Discrete Input module (slot 1 to 10)** ▪ Empty pipe detection ▪ Low flow cut off **Diagnostics Input module (slot 1 to 10)** ▪ Last diagnostics ▪ Current diagnosis **Totalizer 1 to 3 (slot 11 to 13)** ▪ Volume flow ▪ Mass flow ▪ Corrected volume flow **Heartbeat Verification module (fixed assignment)** Verification status (slot 17)

Input values (from automation system to measuring device)	**Analog Output module (fixed assignment)** ▪ External density (slot 14) ▪ External temperature (slot 15) **Discrete Output module (fixed assignment)** Activate/deactivate positive zero return (slot 16) **Totalizer 1 to 3 (slot 11 to 13)** ▪ Totalize ▪ Reset and hold ▪ Preset and hold ▪ Stop ▪ Operating mode configuration: – Net flow total – Forward flow total – Reverse flow total **Heartbeat Verification module (fixed assignment)** Start verification (slot 17)
Supported functions	▪ Identification & Maintenance Simple device identification via: – Control system – Nameplate ▪ Measured value status The process variables are communicated with a measured value status ▪ Blinking feature via the local display for simple device identification and assignment

Administration of software options

Input/output value	Process variable	Category	Slot
Output value	Mass flow	Process variable	1…10
	Volume flow		
	Corrected volume flow		
	Temperature		
	Conductivity		
	Corrected conductivity		
	Electronic temperature		
	Flow velocity		
	Current device diagnostics		
	Previous device diagnostics		
Input/output value	Totalizer	Totalizer	11…13
Input value	External density	Process monitoring	14
	External temperature		15
	Flow override		16
	Status verification	Heartbeat Verification [1)]	17

1) Only available with the "Heartbeat" application package.

Startup configuration

Startup configuration (NSU)	If startup configuration is enabled, the configuration of the most important device parameters is taken from the automation system and used. The following configuration is taken from the automation system: ▪ Management – Software revision – Write protection ▪ System units – Mass flow – Mass – Volume flow – Volume – Corrected volume flow – Corrected volume – Density – Temperature – Conductivity ▪ Sensor adjustment ▪ Process parameter – Damping (flow, conductivity, temperature) – Flow override – Filter options ▪ Low flow cut off – Assign process variable – Switch-on/switch-off point – Pressure shock suppression ▪ Empty pipe detection – Assign process variable – Limit values – Response time ▪ External compensation – Temperature source – Density source – Density value ▪ Diagnostic settings ▪ Diagnostic behavior for diverse diagnostic information

16.5 Power supply

Terminal assignment

→ 📄 31

Supply voltage

The power unit must be tested to ensure it meets safety requirements (e.g. PELV, SELV).

Transmitter

DC 20 to 30 V

Power consumption

Transmitter

Order code for "Output"	Maximum Power consumption
Option **R**: PROFINET	3.5 W

Current consumption

Transmitter

Order code for "Output"	Maximum Current consumption	Maximum switch-on current
Option **R**: PROFINET	145 mA	18 A (< 0.125 ms)

Power supply failure	▪ Totalizers stop at the last value measured. ▪ Configuration is retained in the plug-in memory (HistoROM DAT). ▪ Error messages (incl. total operated hours) are stored.
Electrical connection	→ 📄 32
Potential equalization	→ 📄 34
Terminals	**Transmitter** Spring terminals for wire cross-sections0.5 to 2.5 mm^2 (20 to 14 AWG)
Cable entries	▪ Cable gland: M20 × 1.5 with cable Φ6 to 12 mm (0.24 to 0.47 in) ▪ Thread for cable entry: – M20 – G ½" – NPT ½"
Cable specification	→ 📄 30

16.6 Performance characteristics

Reference operating conditions	▪ Error limits following DIN EN 29104, in future ISO 20456 ▪ Water, typically +15 to +45 °C (+59 to +113 °F); 0.5 to 7 bar (73 to 101 psi) ▪ Data as indicated in the calibration protocol ▪ Accuracy based on accredited calibration rigs according to ISO 17025
Maximum measured error	**Error limits under reference operating conditions** o.r. = of reading **Volume flow** ▪ ±0.5 % o.r. ± 1 mm/s (0.04 in/s) ▪ Optional: ±0.2 % o.r. ± 2 mm/s (0.08 in/s) ℹ Fluctuations in the supply voltage do not have any effect within the specified range.

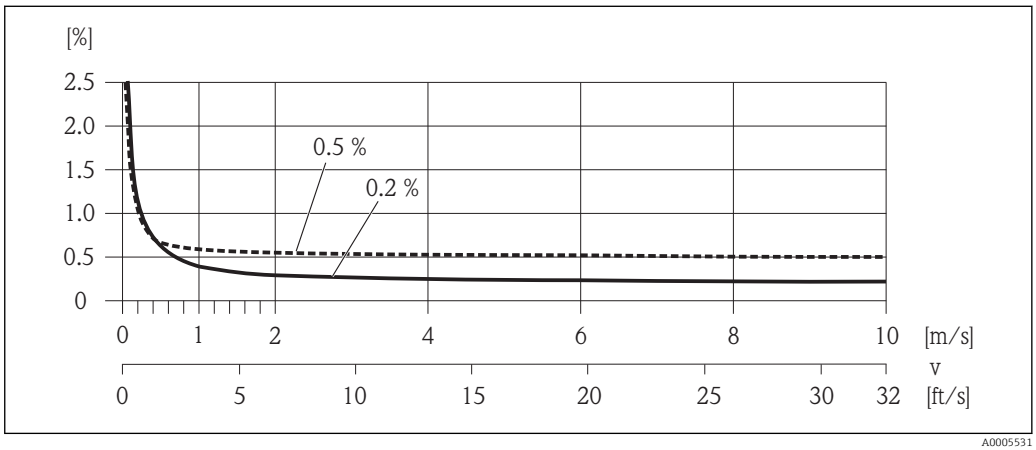

19 Maximum measured error in % o.r.

Electrical conductivity
Max. measured error not specified.

Repeatability

o.r. = of reading

Volume flow
Max. ±0.1 % o.r. ± 0.5 mm/s (0.02 in/s)

Electrical conductivity
Max. ±5 % o.r.

Temperature measurement response time

T_{90} < 15 s

Influence of ambient temperature

Current output

o.r. = of reading

Temperature coefficient	Max. ±0.005 % o.r./°C

Pulse/frequency output

Temperature coefficient	No additional effect. Included in accuracy.

16.7 Installation

"Mounting requirements"

16.8 Environment

Ambient temperature range

→ 📄 21

Temperature tables

Observe the interdependencies between the permitted ambient and fluid temperatures when operating the device in hazardous areas.

For detailed information on the temperature tables, see the separate document entitled "Safety Instructions" (XA) for the device.

Storage temperature

The storage temperature corresponds to the operating temperature range of the measuring transmitter and the appropriate measuring sensors.→ 📄 21

- Protect the measuring device against direct sunlight during storage in order to avoid unacceptably high surface temperatures.
- Select a storage location where moisture cannot collect in the measuring device as fungus or bacteria infestation can damage the liner.
- If protection caps or protective covers are mounted these should never be removed before installing the measuring device.

Degree of protection	**Transmitter and sensor** ▪ As standard: IP66/67, type 4X enclosure ▪ With the order code for "Sensor options", option **CM**: IP69 can also be ordered ▪ When housing is open: IP20, type 1 enclosure ▪ Display module: IP20, type 1 enclosure
Vibration resistance	▪ Vibration, sinusoidal according to IEC 60068-2-6 – 2 to 8.4 Hz, 3.5 mm peak – 8.4 to 2 000 Hz, 1 g peak ▪ Vibration broad-band random, according to IEC 60068-2-64 – 10 to 200 Hz, 0.003 g^2/Hz – 200 to 2 000 Hz, 0.001 g^2/Hz – Total: 1.54 g rms
Shock resistance	Shock, half-sine according to IEC 60068-2-27 6 ms 30 g
Impact resistance	Rough handling shocks according to IEC 60068-2-31
Mechanical load	▪ Protect the transmitter housing against mechanical effects, such as shock or impact. ▪ Never use the transmitter housing as a ladder or climbing aid.
Electromagnetic compatibility (EMC)	▪ As per IEC/EN 61326 ▪ Complies with emission limits for industry as per EN 55011 (Class A) Details are provided in the Declaration of Conformity.

16.9 Process

Medium temperature range	▪ −20 to +150 °C (−4 to +302 °F) for PFA, DN 25 to 200 (1 to 8") ▪ −20 to +180 °C (−4 to +356 °F) for PFA high-temperature, DN 25 to 200 (1 to 8") ▪ −40 to +130 °C (−40 to +266 °F) for PTFE, DN 15 to 600 (½ to 24")

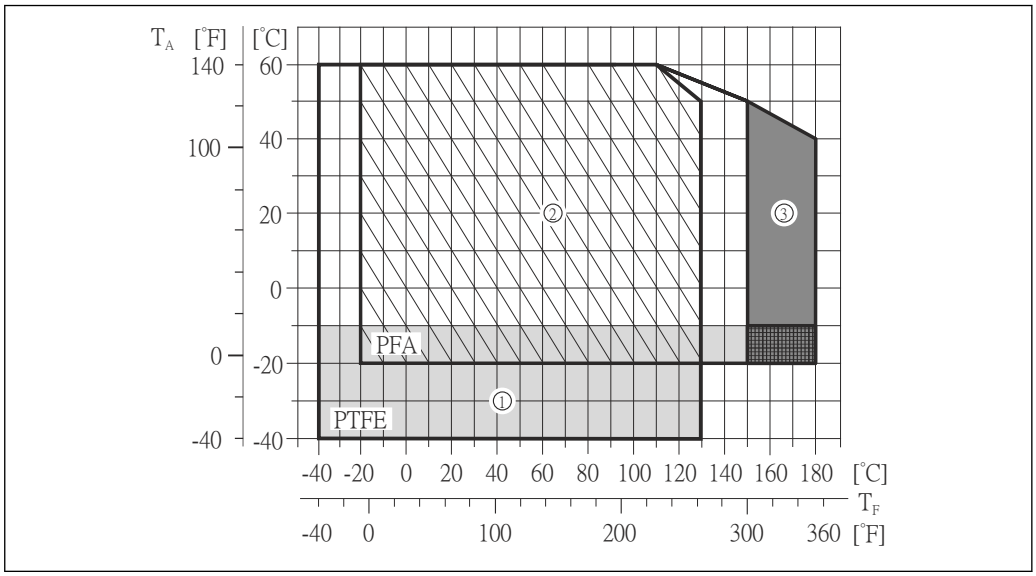

A0019742

T_A Ambient temperature

T_F Medium temperature

1 Gray area: the ambient and fluid temperature range of −10 to −40 °C (−14 to −40 °F) applies to stainless flanges only

2 Hatched area: harsh environment and IP68 only up to +130 °C (+266 °F)

3 Dark-gray area: high-temperature version with insulation

Conductivity

≥ 5 µS/cm for liquids in general. Stronger filter damping is required for very low conductivity values.

Pressure-temperature ratings

An overview of the pressure-temperature ratings for the process connections is provided in the "Technical Information" document

Pressure tightness

"–" = no specifications possible

Liner: PFA

Nominal diameter		Limit values for absolute pressure in [mbar] ([psi]) for fluid temperatures:		
[mm]	[in]	+25 °C (+77 °F)	+80 °C (+176 °F)	+100 to +180 °C (+212 to +356 °F)
25	1	0 (0)	0 (0)	0 (0)
32	–	0 (0)	0 (0)	0 (0)
40	1 ½	0 (0)	0 (0)	0 (0)
50	2	0 (0)	0 (0)	0 (0)
65	–	0 (0)	–	0 (0)
80	3	0 (0)	–	0 (0)
100	4	0 (0)	–	0 (0)
125	–	0 (0)	–	0 (0)
150	6	0 (0)	–	0 (0)
200	8	0 (0)	–	0 (0)

Liner: PTFE

Nominal diameter		Limit values for absolute pressure in [mbar] ([psi]) for fluid temperatures:			
[mm]	[in]	+25 °C (+77 °F)	+80 °C (+176 °F)	+100 °C (+212 °F)	+130 °C (+266 °F)
15	½	0 (0)	0 (0)	0 (0)	100 (1.45)
25	1	0 (0)	0 (0)	0 (0)	100 (1.45)
32	–	0 (0)	0 (0)	0 (0)	100 (1.45)
40	1 ½	0 (0)	0 (0)	0 (0)	100 (1.45)
50	2	0 (0)	0 (0)	0 (0)	100 (1.45)
65	–	0 (0)	–	40 (0.58)	130 (1.89)
80	3	0 (0)	–	40 (0.58)	130 (1.89)
100	4	0 (0)	–	135 (1.96)	170 (2.47)
125	–	135 (1.96)	–	240 (3.48)	385 (5.58)
150	6	135 (1.96)	–	240 (3.48)	385 (5.58)
200	8	200 (2.90)	–	290 (4.21)	410 (5.95)
250	10	330 (4.79)	–	400 (5.80)	530 (7.69)

Nominal diameter		Limit values for absolute pressure in [mbar] ([psi]) for fluid temperatures:			
[mm]	[in]	+25 °C (+77 °F)	+80 °C (+176 °F)	+100 °C (+212 °F)	+130 °C (+266 °F)
300	12	400 (5.80)	–	500 (7.25)	630 (9.14)
350	14	470 (6.82)	–	600 (8.70)	730 (10.6)
400	16	540 (7.83)	–	670 (9.72)	800 (11.6)
450	18	No negative pressure permitted!			
500	20				
600	24				

Flow limit

The diameter of the pipe and the flow rate determine the nominal diameter of the sensor. The optimum velocity of flow is between 2 to 3 m/s (6.56 to 9.84 ft/s). Also match the velocity of flow (v) to the physical properties of the fluid:
- v < 2 m/s (6.56 ft/s): for abrasive fluids (e.g. potter's clay, lime milk, ore slurry)
- v > 2 m/s (6.56 ft/s): for fluids producing buildup (e.g. wastewater sludge)

A necessary increase in the flow velocity can be achieved by reducing the sensor nominal diameter.

For an overview of the full scale values for the measuring range, see the "Measuring range" section → 📄 111

Pressure loss

- No pressure loss occurs if the sensor is installed in a pipe with the same nominal diameter.
- Pressure losses for configurations incorporating adapters according to DIN EN 545 → 📄 22

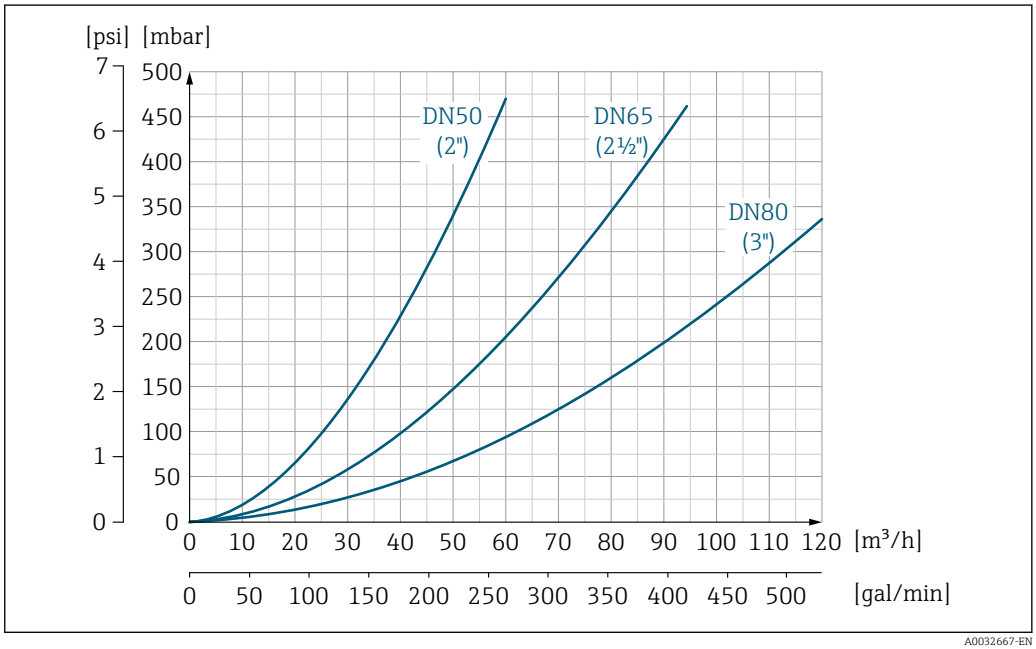

20 Pressure loss DN 50 to 80 (2 to 3") in the case of order code for "Design", option C "Insertion length short ISO/DVGW to DN300, without inlet/outlet runs, constricted meas.tube"

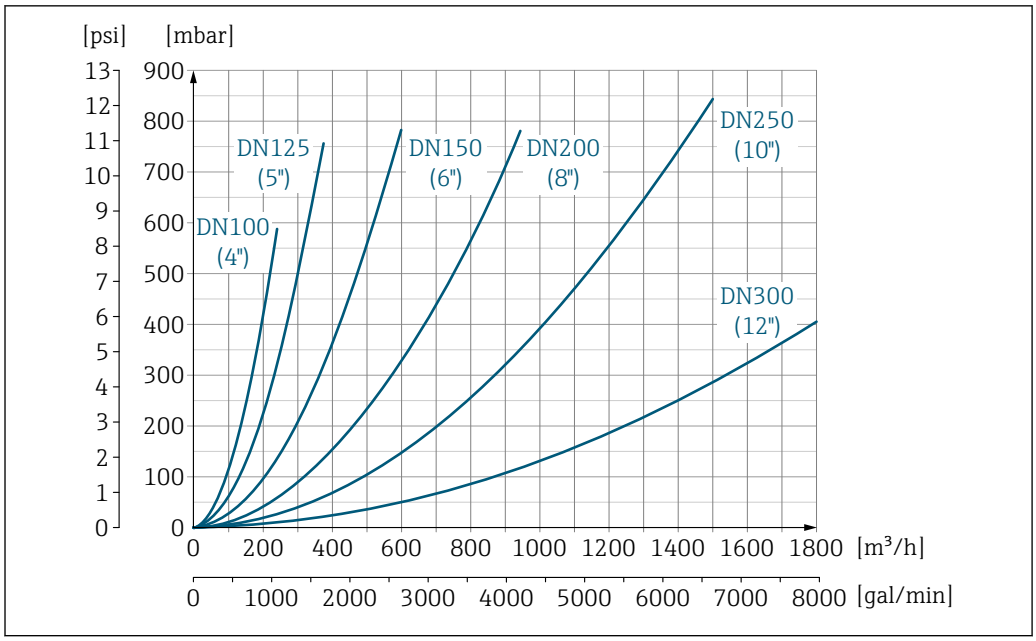

21 Pressure loss DN 100 to 300 (4 to 12") in the case of order code for "Design", option C "Insertion length short ISO/DVGW to DN300, without inlet/outlet runs, constricted meas.tube"

System pressure

→ 22

Vibrations

→ 22

16.10 Mechanical construction

Design, dimensions

For the dimensions and installation lengths of the device, see the "Technical Information" document, "Mechanical construction" section.

Weight

All values (weight exclusive of packaging material) refer to devices for standard pressure ratings. Weight specifications including transmitter: order code for "Housing", option A "Compact, aluminum coated".

Different values due to different transmitter versions:

Compact version

- Including the transmitter
- High-temperature version + 1.5 kg (3.31 lb)
- Weight specifications apply to standard pressure ratings and without packaging material.

Weight in SI units

Nominal diameter		EN (DIN), AS [1]		ASME		JIS	
[mm]	[in]	Pressure rating	[kg]	Pressure rating	[kg]	Pressure rating	[kg]
15	½	PN 40	4.5	Class 150	4.5	10K	4.5
25	1	PN 40	5.3	Class 150	5.3	10K	5.3
32	–	PN 40	6	Class 150	–	10K	5.3
40	1 ½	PN 40	7.4	Class 150	7.4	10K	6.3

Nominal diameter		EN (DIN), AS [1]		ASME		JIS	
[mm]	[in]	Pressure rating	[kg]	Pressure rating	[kg]	Pressure rating	[kg]
50	2	PN 40	8.6	Class 150	8.6	10K	7.3
65	–	PN 16	10	Class 150	–	10K	9.1
80	3	PN 16	12	Class 150	12	10K	10.5
100	4	PN 16	14	Class 150	14	10K	12.7
125	–	PN 16	19.5	Class 150	–	10K	19
150	6	PN 16	23.5	Class 150	23.5	10K	22.5
200	8	PN 10	43	Class 150	43	10K	39.9
250	10	PN 10	63	Class 150	73	10K	67.4
300	12	PN 10	68	Class 150	108	10K	70.3
350	14	PN 10	103	Class 150	173	10K	79
400	16	PN 10	118	Class 150	203	10K	100
450	18	PN 10	159	Class 150	253	10K	128
500	20	PN 10	154	Class 150	283	10K	142
600	24	PN 10	206	Class 150	403	10K	188

1) For flanges to AS, only DN 25 and 50 are available.

Weight in US units

Nominal diameter		ASME	
[mm]	[in]	Pressure rating	[lbs]
15	½	Class 150	9.92
25	1	Class 150	11.7
40	1 ½	Class 150	16.3
50	2	Class 150	19.0
80	3	Class 150	26.5
100	4	Class 150	30.9
150	6	Class 150	51.8
200	8	Class 150	94.8
250	10	Class 150	161.0
300	12	Class 150	238.1
350	14	Class 150	381.5
400	16	Class 150	447.6
450	18	Class 150	557.9
500	20	Class 150	624.0
600	24	Class 150	888.6

Measuring tube specification

Nominal diameter		Pressure rating					Process connection internal diameter			
		EN (DIN)	ASME	AS 2129	AS 4087	JIS	PFA		PTFE	
[mm]	[in]	[bar]	[psi]	[bar]	[bar]	[bar]	[mm]	[in]	[mm]	[in]
15	½	PN 40	Class 150	–	–	20K	–	–	15	0.59
25	1	PN 40	Class 150	Table E	–	20K	23	0.91	26	1.02
32	–	PN 40	–	–	–	20K	32	1.26	35	1.38
40	1 ½	PN 40	Class 150	–	–	20K	36	1.42	41	1.61
50	2	PN 40	Class 150	Table E	PN 16	10K	48	1.89	52	2.05
65	–	PN 16	–	–	–	10K	63	2.48	67	2.64
80	3	PN 16	Class 150	–	–	10K	75	2.95	80	3.15
100	4	PN 16	Class 150	–	–	10K	101	3.98	104	4.09
125	–	PN 16	–	–	–	10K	126	4.96	129	5.08
150	6	PN 16	Class 150	–	–	10K	154	6.06	156	6.14
200	8	PN 10	Class 150	–	–	10K	201	7.91	202	7.95
250	10	PN 10	Class 150	–	–	10K	–	–	256	10.1
300	12	PN 10	Class 150	–	–	10K	–	–	306	12.0
350	14	PN 10	Class 150	–	–	10K	–	–	337	13.3
400	16	PN 10	Class 150	–	–	10K	–	–	387	15.2
450	18	PN 10	Class 150	–	–	10K	–	–	432	17.0
500	20	PN 10	Class 150	–	–	10K	–	–	487	19.2
600	24	PN 10	Class 150	–	–	10K	–	–	593	23.3

Materials

Transmitter housing

- Order code for "Housing", option **A** "Compact, aluminum coated":
  Aluminum, AlSi10Mg, coated
- Window material for optional local display (→ 📖 126):
  For order code for "Housing", option **A**: glass

Cable entries/cable glands

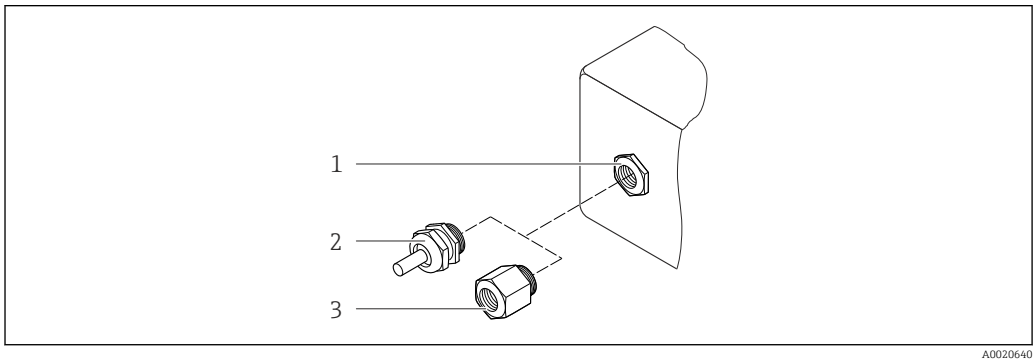

A0020640

22 Possible cable entries/cable glands

1 Female thread M20 × 1.5
2 Cable gland M20 × 1.5
3 Adapter for cable entry with internal thread G ½" or NPT ½"

Order code for "Housing", option A "Compact, coated aluminum"

The various cable entries are suitable for hazardous and non-hazardous areas.

Cable entry/cable gland	Material
Cable gland M20 × 1.5	Nickel-plated brass
Adapter for cable entry with internal thread G ½"	
Adapter for cable entry with internal thread NPT ½"	

Device plug

Electrical connection	Material
Plug M12x1	▪ Socket: Stainless steel, 1.4404 (316L) ▪ Contact housing: Polyamide ▪ Contacts: Gold-plated brass

Sensor housing

- DN 15 to 300 (½ to 12"): coated aluminum AlSi10Mg
- DN 350 to 600 (14 to 24"): carbon steel with protective varnish

Measuring tubes

Stainless steel, 1.4301/304/1.4306/304L; for flanges made of carbon with Al/Zn protective coating (DN 15 to 300 (½ to 12")) or protective varnish (DN 350 to 600 (14 to 24"))

Liner

- PFA
- PTFE

Process connections

EN 1092-1 (DIN 2501)
Stainless steel, 1.4571 (F316L); carbon steel, E250C [1]/S235JRG2/P245GH

ASME B16.5
Stainless steel, F316L; carbon steel, A105 [1]

JIS B2220
Stainless steel, 1.0425 (F316L) [1]; carbon steel, A105/A350 LF2

AS 2129 Table E
- DN 25 (1"): carbon steel, A105/S235JRG2
- DN 40 (1 ½"): carbon steel, A105/S275JR

AS 4087 PN 16
Carbon steel, A105/S275JR

Electrodes

Stainless steel, 1.4435 (F316L); Alloy C22, 2.4602 (UNS N06022); platinum; tantalum; titanium

Seals

As per DIN EN 1514-1, form IBC

1) DN 15 to 300 (½ to 12") with Al/Zn protective coating; DN 350 to 600 (14 to 24") with protective varnish

Accessories

Ground disks

Stainless steel, 1.4435 (F316L); Alloy C22, 2.4602 (UNS N06022); tantalum; titanium

Fitted electrodes

Measuring electrodes, reference electrodes and electrodes for empty pipe detection:
- Standard: stainless steel, 1.4435 (F316L); Alloy C22, 2.4602 (UNS N06022); tantalum, titanium
- Optional: only platinum measuring electrodes

Process connections

- EN 1092-1 (DIN 2501): DN ≤ 300 (12") Form A, DN ≥ 350 (14") Form B; dimensions DN 65 PN 16 and only as per EN 1092-1
- ASME B16.5
- JIS B2220
- AS 2129 Table E
- AS 4087 PN 16

For information on the different materials used in the process connections → 125

Surface roughness

Stainless steel electrodes, 1.4435 (F316L); Alloy C22, 2.4602 (UNS N06022); platinum; tantalum; titanium:
≤ 0.3 to 0.5 µm (11.8 to 19.7 µin)
(All data relate to parts in contact with fluid)

Liner with PFA:
≤ 0.4 µm (15.7 µin)
(All data relate to parts in contact with fluid)

16.11 Operability

Local display

The local display is only available with the following device order code:
Order code for "Display; operation", option **B**: 4-line; illuminated, via communication

Display element
- 4-line liquid crystal display with 16 characters per line.
- White background lighting; switches to red in event of device errors.
- Format for displaying measured variables and status variables can be individually configured.
- Permitted ambient temperature for the display: −20 to +60 °C (−4 to +140 °F). The readability of the display may be impaired at temperatures outside the temperature range.

Disconnecting the local display from the main electronics module

In the case of the "Compact, aluminum coated" housing version, the local display must only be disconnected manually from the main electronics module. In the case of the "Compact, hygienic, stainless" and "Ultra-compact, hygienic, stainless" housing versions, the local display is integrated in the housing cover and is disconnected from the main electronics module when the housing cover is opened.

"Compact, aluminum coated" housing version

The local display is plugged onto the main electronics module. The electronic connection between the local display and main electronics module is established via a connecting cable.

For some work performed on the measuring device (e.g. electrical connection), it is advisable to disconnect the local display from the main electronics module:

1. Press in the side latches of the local display.
2. Remove the local display from the main electronics module. Pay attention to the length of the connecting cable when doing so.

Once the work is completed, plug the local display back on.

Remote operation

Via PROFINET network

This communication interface is available in device versions with PROFINET.

Star topology

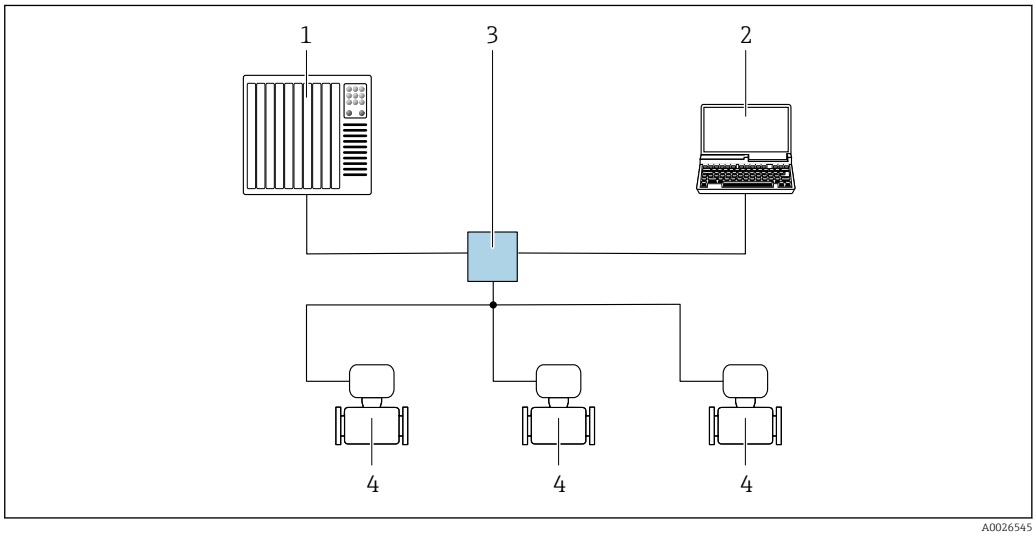

23 Options for remote operation via PROFINET network: star topology

1 Automation system, e.g. Simatic S7 (Siemens)
2 Computer with Web browser (e.g. Internet Explorer) for accessing the integrated device Web server or computer with operating tool (e.g. FieldCare, DeviceCare, SIMATIC PDM) with COM DTM "CDI Communication TCP/IP"
3 Switch, e.g. Scalance X204 (Siemens)
4 Measuring device

Service interface

Via service interface (CDI-RJ45)

PROFINET

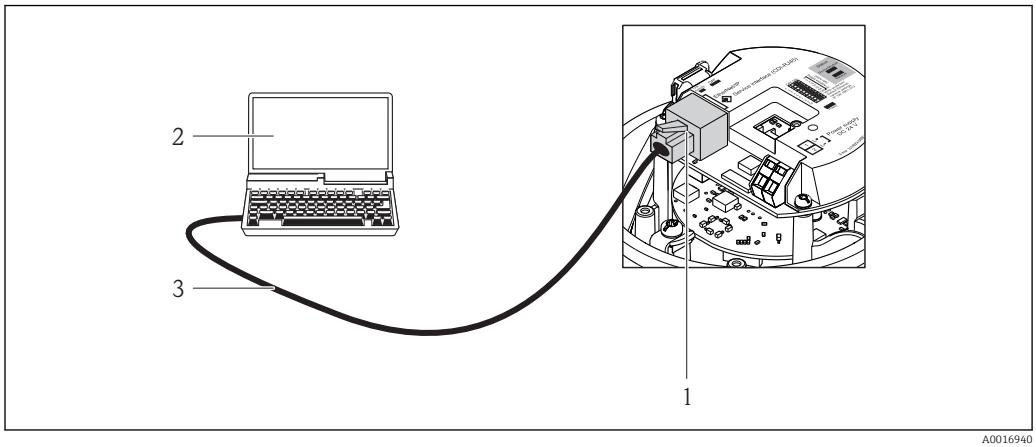

24 Connection for order code for "Output", option R: PROFINET

1. *Service interface (CDI -RJ45) and PROFINET interface of the measuring device with access to the integrated Web server*
2. *Computer with Web browser (e.g. Internet Explorer) for accessing the integrated device Web server or with "FieldCare" operating tool with COM DTM "CDI Communication TCP/IP"*
3. *Standard Ethernet connecting cable with RJ45 plug*

Languages	Can be operated in the following languages: Via "FieldCare" operating tool: English, German, French, Spanish, Italian, Chinese, Japanese

16.12 Certificates and approvals

CE mark	The measuring system is in conformity with the statutory requirements of the applicable EU Directives. These are listed in the corresponding EU Declaration of Conformity along with the standards applied. Endress+Hauser confirms successful testing of the device by affixing to it the CE mark.
Ex approval	The devices are certified for use in hazardous areas and the relevant safety instructions are provided in the separate "Safety Instructions" (XA) document. Reference is made to this document on the nameplate.
Certification PROFINET	**PROFINET interface** The measuring device is certified and registered by the PNO (PROFIBUS User Organization Organization). The measuring system meets all the requirements of the following specifications: ▪ Certified according to: – Test specification for PROFINET devices – PROFINET Security Level 1 – Netload Class ▪ The device can also be operated with certified devices of other manufacturers (interoperability)

Pressure Equipment Directive

- With the identification PED/G1/x (x = category) on the sensor nameplate, Endress+Hauser confirms conformity with the "Essential Safety Requirements" specified in Appendix I of the Pressure Equipment Directive 2014/68/EC.
- Devices not bearing this marking (PED) are designed and manufactured according to good engineering practice. They meet the requirements of Art. 4, Par. 3 of the Pressure Equipment Directive 2014/68/EU. The range of application is indicated in tables 6 to 9 in Annex II of the Pressure Equipment Directive 2014/68/EC.

Other standards and guidelines

- EN 60529
  Degrees of protection provided by enclosures (IP code)
- EN 61010-1
  Safety requirements for electrical equipment for measurement, control and laboratory use - general requirements
- IEC/EN 61326
  Emission in accordance with Class A requirements. Electromagnetic compatibility (EMC requirements).
- NAMUR NE 21
  Electromagnetic compatibility (EMC) of industrial process and laboratory control equipment
- NAMUR NE 32
  Data retention in the event of a power failure in field and control instruments with microprocessors
- NAMUR NE 43
  Standardization of the signal level for the breakdown information of digital transmitters with analog output signal.
- NAMUR NE 53
  Software of field devices and signal-processing devices with digital electronics
- NAMUR NE 105
  Specifications for integrating fieldbus devices in engineering tools for field devices
- NAMUR NE 107
  Self-monitoring and diagnosis of field devices
- NAMUR NE 131
  Requirements for field devices for standard applications

16.13 Application packages

Many different application packages are available to enhance the functionality of the device. Such packages might be needed to address safety aspects or specific application requirements.

The application packages can be ordered with the device or subsequently from Endress+Hauser. Detailed information on the order code in question is available from your local Endress+Hauser sales center or on the product page of the Endress+Hauser website: www.endress.com.

Cleaning

Package	Description
Electrode cleaning circuit (ECC)	The electrode cleaning circuit (ECC) function has been developed to have a solution for applications where magnetite (Fe_3O_4) deposits frequently occur (e.g. hot water). Since magnetite is highly conductive this build up leads to measuring errors and ultimately to the loss of signal. The application package is designed to AVOID build up of highly conductive matter and thin layers (typical of magnetite).

Heartbeat Technology

Package	Description
Heartbeat Verification +Monitoring	**Heartbeat Verification** Meets the requirement for traceable verification to DIN ISO 9001:2008 Chapter 7.6 a) "Control of monitoring and measuring equipment". ▪ Functional testing in the installed state without interrupting the process. ▪ Traceable verification results on request, including a report. ▪ Simple testing process via local operation or other operating interfaces. ▪ Clear measuring point assessment (pass/fail) with high test coverage within the framework of manufacturer specifications. ▪ Extension of calibration intervals according to operator's risk assessment. **Heartbeat Monitoring** Continuously supplies data, which are characteristic of the measuring principle, to an external condition monitoring system for the purpose of preventive maintenance or process analysis. These data enable the operator to: ▪ Draw conclusions - using these data and other information - about the impact process influences (such as corrosion, abrasion, buildup etc.) have on the measuring performance over time. ▪ Schedule servicing in time. ▪ Monitor the process or product quality, e.g. gas pockets.

16.14 Accessories

Overview of accessories available for order → 📄 109

16.15 Supplementary documentation

For an overview of the scope of the associated Technical Documentation, refer to the following:
- The *W@M Device Viewer* : Enter the serial number from the nameplate (www.endress.com/deviceviewer)
- The *Endress+Hauser Operations App*: Enter the serial number from the nameplate or scan the 2-D matrix code (QR code) on the nameplate.

Standard documentation

Brief Operating Instructions

Brief Operating Instructions containing all the important information for standard commissioning is enclosed with the device.

Technical Information

Measuring device	Documentation code
Promag P 100	TI01102D

Description of device parameters

Measuring device	Documentation code
Promag 100	GP01042D

Supplementary device-dependent documentation

Safety Instructions

Contents	Documentation code
ATEX/IECEx Ex nA	XA01090D

Special Documentation

Contents	Documentation code
Information on the Pressure Equipment Directive	SD01056D
Heartbeat Technology	SD01149D

Installation Instructions

Contents	Comment
Installation instructions for spare part sets and accessories	▪ Access the overview of all the available spare part sets via *W@M Device Viewer* → 🗎 107 ▪ Accessories available for order with Installation Instructions → 🗎 109

Index

A
Adapters . . . 22
Adapting the diagnostic behavior . . . 85
Ambient temperature
  Influence . . . 118
Ambient temperature range . . . 21
Application . . . 111
Applicator . . . 111
Approvals . . . 128

C
Cable entries
  Technical data . . . 117
Cable entry
  Degree of protection . . . 38
CE mark . . . 10, 128
Certificates . . . 128
Certification PROFIBUS . . . 128
Checklist
  Post-connection check . . . 38
  Post-installation check . . . 28
Cleaning
  Exterior cleaning . . . 106
  Interior cleaning . . . 106
Commissioning . . . 59
  Advanced settings . . . 65
  Configuring the measuring device . . . 59
Conductivity . . . 120
Connecting cable . . . 30
Connecting the measuring device . . . 32
Connection
  see Electrical connection
Connection examples, potential equalization . . . 34
Connection preparations . . . 32
Connection tools . . . 30
Current consumption . . . 116
Cyclic data transmission . . . 51

D
Declaration of Conformity . . . 10
Define access code . . . 72
Degree of protection . . . 38, 119
Design
  Measuring device . . . 12
Designated use . . . 9
Device components . . . 12
Device description files . . . 50
Device documentation
  Supplementary documentation . . . 8
Device locking, status . . . 74
Device master file
  GSD . . . 51
Device name
  Sensor . . . 15
  Transmitter . . . 14
Device repair . . . 107
Device revision . . . 50
Device type ID . . . 50
DeviceCare . . . 49
Diagnostic information
  Design, description . . . 83, 84
  DeviceCare . . . 83
  FieldCare . . . 83
  Light emitting diodes . . . 81
  Overview . . . 87
  Remedial measures . . . 87
  Web browser . . . 82
Diagnostic list . . . 101
DIP switches
  see Write protection switch
Disabling write protection . . . 72
Display values
  For locking status . . . 74
Disposal . . . 108
Document
  Function . . . 6
  Symbols used . . . 6
Document function . . . 6
Down pipe . . . 19

E
ECC . . . 69
Electrical connection
  Commubox FXA291 . . . 47
  Degree of protection . . . 38
  Measuring device . . . 30
  Operating tools
    Via PROFINET network . . . 47, 127
    Via service interface (CDI-RJ45) . . . 48, 127
    Via service interface (CDI) . . . 47
  RSLogix 5000 . . . 47, 127
  Web server . . . 48, 127
Electromagnetic compatibility . . . 119
Enabling write protection . . . 72
Endress+Hauser services
  Maintenance . . . 106
  Repair . . . 107
Environment
  Ambient temperature . . . 21
  Impact resistance . . . 119
  Mechanical load . . . 119
  Shock resistance . . . 119
  Storage temperature . . . 118
  Vibration resistance . . . 119
Error messages
  see Diagnostic messages
Event list . . . 101
Event logbook . . . 101
Ex approval . . . 128
Extended order code
  Sensor . . . 15
  Transmitter . . . 14

Exterior cleaning 106

F
Field of application
Residual risks 10
FieldCare 48
Device description file 50
Establishing a connection 48
Function 48
User interface 49
Filtering the event logbook 101
Firmware
Release date 50
Version 50
Firmware history 105
Fitted electrodes 126
Flash function 59
Flow direction 20
Flow limit 121
Function check 59
Functions
see Parameters

G
Galvanic isolation 113

H
Hardware write protection 73
Heavy sensors 20

I
I/O electronics module 12, 32
Identifying the measuring device 13
Impact resistance 119
Incoming acceptance 13
Influence
Ambient temperature 118
Information on the document 6
Inlet runs 21
Input 111
Inspection
Installation 28
Received goods 13
Inspection check
Connection 38
Installation 19
Installation conditions
Adapters 22
Down pipe 19
Heavy sensors 20
Inlet and outlet runs 21
Installation dimensions 21
Mounting location 19
Orientation 20
Partially filled pipe 19
System pressure 22
Vibrations 22
Installation dimensions 21
Interior cleaning 106

L
Languages, operation options 128
Low flow cut off 113

M
Main electronics module 12
Maintenance tasks 106
Replacing seals 106
Manufacturer ID 50
Manufacturing date 14, 15
Materials 124
Maximum measured error 117
Measured values
Calculated 111
Measured 111
see Process variables
Measuring and test equipment 106
Measuring device
Configuration 59
Conversion 107
Design 12
Disposal 108
Integrating via communication protocol 50
Mounting the sensor 23
Mounting the ground cable/ground disks 24
Mounting the seals 24
Screw tightening torques 24
Preparing for electrical connection 32
Preparing for mounting 23
Removing 108
Repairs 107
Measuring principle 111
Measuring range 111
Measuring system 111
Measuring tube specification 124
Mechanical load 119
Medium temperature range 119
Menu
Diagnostics 100
Operation 74
Setup 59, 60
Menus
For measuring device configuration 59
For specific settings 65
Mounting dimensions
see Installation dimensions
Mounting location 19
Mounting preparations 23
Mounting tools 23

N
Nameplate
Sensor 15
Transmitter 14

O
Operable flow range 111
Operating menu
Menus, submenus 40

Structure . . . 40
Submenus and user roles . . . 41
Operating philosophy . . . 41
Operation . . . 74
Operation options . . . 39
Operational safety . . . 10
Order code . . . 14, 15
Orientation (vertical, horizontal) . . . 20
Outlet runs . . . 21
Output . . . 112
Output signal . . . 112

P

Packaging disposal . . . 18
Parameter settings
Administration (Submenu) . . . 70
Communication (Submenu) . . . 62
Device information (Submenu) . . . 103
Diagnostics (Menu) . . . 100
Display (Submenu) . . . 67
Electrode cleaning circuit (Submenu) . . . 69
Empty pipe detection (Wizard) . . . 64
Low flow cut off (Wizard) . . . 62
Process variables (Submenu) . . . 74
Sensor adjustment (Submenu) . . . 65
Setup (Menu) . . . 60
Simulation (Submenu) . . . 71
System units (Submenu) . . . 60
Totalizer 1 to n (Submenu) . . . 65, 76
Totalizer handling (Submenu) . . . 77
Web server (Submenu) . . . 46
Partially filled pipe . . . 19
Performance characteristics . . . 117
Post-connection check (checklist) . . . 38
Post-installation check . . . 59
Post-installation check (checklist) . . . 28
Potential equalization . . . 34
Power consumption . . . 116
Power supply failure . . . 117
Pressure Equipment Directive . . . 129
Pressure loss . . . 121
Pressure tightness . . . 120
Pressure-temperature ratings . . . 120
Process conditions
Conductivity . . . 120
Flow limit . . . 121
Medium temperature . . . 119
Pressure loss . . . 121
Pressure tightness . . . 120
Process connections . . . 126
Product safety . . . 10
Protecting parameter settings . . . 72

R

Reading measured values . . . 74
Recalibration . . . 106
Reference operating conditions . . . 117
Registered trademarks . . . 8
Remote operation . . . 127
Repair of a device . . . 107
Repairs . . . 107
Notes . . . 107
Repeatability . . . 118
Replacement
Device components . . . 107
Replacing seals . . . 106
Requirements for personnel . . . 9
Return . . . 107

S

Safety . . . 9
Screw tightening torques . . . 24
Sensor
Mounting . . . 23
Serial number . . . 14, 15
Setting the operating language . . . 59
Settings
Adapting the measuring device to the process conditions . . . 76
Administration . . . 70
Advanced display configurations . . . 67
Communication interface . . . 62
Device reset . . . 103
Device tag . . . 60
Electrode cleaning circuit (ECC) . . . 69
Empty pipe detection (EPD) . . . 64
Low flow cut off . . . 62
Operating language . . . 59
Resetting the totalizer . . . 77
Sensor adjustment . . . 65
Simulation . . . 71
System units . . . 60
Totalizer . . . 65
Totalizer reset . . . 77
Shock resistance . . . 119
Signal on alarm . . . 112
Software release . . . 50
Software write protection . . . 73
Spare part . . . 107
Spare parts . . . 107
Special connection instructions . . . 36
Standards and guidelines . . . 129
Startup parameterization (NSU) . . . 59
Status signals . . . 82
Storage conditions . . . 17
Storage temperature . . . 17
Storage temperature range . . . 118
Structure
Operating menu . . . 40
Submenu
Administration . . . 70
Advanced setup . . . 65
Communication . . . 62
Device information . . . 103
Display . . . 67
Electrode cleaning circuit . . . 69
Event list . . . 101
Measured values . . . 74

Overview 41
Process variables 74
Sensor adjustment 65
Simulation 71
System units 60
Totalizer 1 to n 65, 76
Totalizer handling 77
Web server 46
Supplementary documentation 130
Supply voltage 116
Surface roughness 126
System design
Measuring system 111
see Measuring device design
System integration 50
System pressure 22

T

Technical data, overview 111
Temperature measurement response time 118
Temperature range
Storage temperature 17
Terminal assignment 31, 32
Terminals 117
Tools
Electrical connection 30
For mounting 23
Transport 17
Totalizer
Assign process variable 76
Configuration 65
Transmitter
Connecting the signal cables 32
Turning the display module 28
Transporting the measuring device 17
Troubleshooting
General 79
Turning the display module 28

U

Use of the measuring device
Borderline cases 9
Incorrect use 9
see Designated use
User interface
Current diagnostic event 100
Previous diagnostic event 100
User roles 41

V

Version data for the device 50
Vibration resistance 119
Vibrations 22

W

W@M 106, 107
W@M Device Viewer 13, 107
Weight
Compact version 122
Transport (notes) 17
Wizard
Define access code 72
Empty pipe detection 64
Low flow cut off 62
Workplace safety 10
Write protection
Via access code 72
Via startup parameterization (NSU) 73
Via write protection switch 73
Write protection switch 73

www.addresses.endress.com

Endress+Hauser

People for Process Automation