BA01755D/06/EN/02.21
71505929
2021-01-01

Valid as of version
01.00.zz (Device firmware)

Operating Instructions
Proline Promass Q 500

Coriolis flowmeter
EtherNet/IP

EtherNet/IP

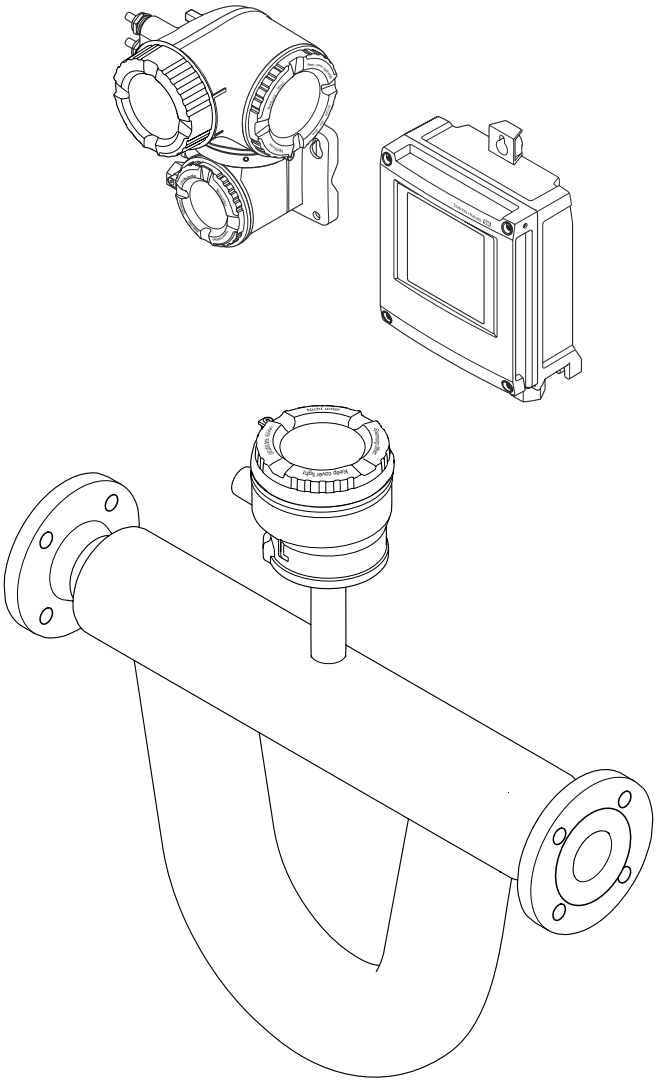

Endress+Hauser
People for Process Automation

- Make sure the document is stored in a safe place such that it is always available when working on or with the device.
- To avoid danger to individuals or the facility, read the "Basic safety instructions" section carefully, as well as all other safety instructions in the document that are specific to working procedures.
- The manufacturer reserves the right to modify technical data without prior notice. Your Endress+Hauser Sales Center will supply you with current information and updates to these instructions.

Table of contents

1 About this document 6
1.1 Document function 6
1.2 Symbols 6
1.2.1 Safety symbols 6
1.2.2 Electrical symbols 6
1.2.3 Communication symbols 6
1.2.4 Tool symbols 7
1.2.5 Symbols for certain types of information 7
1.2.6 Symbols in graphics 7
1.3 Documentation 8
1.3.1 Standard documentation 8
1.3.2 Supplementary device-dependent documentation 8
1.4 Registered trademarks 8

2 Safety instructions 9
2.1 Requirements for the personnel 9
2.2 Designated use 9
2.3 Workplace safety 10
2.4 Operational safety 10
2.5 Product safety 10
2.6 IT security 11
2.7 Device-specific IT security 11
2.7.1 Protecting access via hardware write protection 11
2.7.2 Protecting access via a password 11
2.7.3 Access via Web server 12
2.7.4 Access via service interface (CDI-RJ45) 13

3 Product description 14
3.1 Product design 14
3.1.1 Proline 500 – digital 14
3.1.2 Proline 500 15

4 Incoming acceptance and product identification 16
4.1 Incoming acceptance 16
4.2 Product identification 16
4.2.1 Transmitter nameplate 17
4.2.2 Sensor nameplate 19
4.2.3 Symbols on measuring device 20

5 Storage and transport 21
5.1 Storage conditions 21
5.2 Transporting the product 21
5.2.1 Measuring devices without lifting lugs 21
5.2.2 Measuring devices with lifting lugs . . 22
5.2.3 Transporting with a fork lift 22
5.3 Packaging disposal 22

6 Installation 22
6.1 Installation conditions 22
6.1.1 Mounting position 22
6.1.2 Environmental and process requirements 25
6.1.3 Special mounting instructions 25
6.2 Mounting the measuring device 28
6.2.1 Required tools 28
6.2.2 Preparing the measuring device 28
6.2.3 Mounting the measuring device 28
6.2.4 Mounting the transmitter housing: Proline 500 – digital 29
6.2.5 Mounting the transmitter housing: Proline 500 30
6.2.6 Turning the transmitter housing: Proline 500 32
6.2.7 Turning the display module: Proline 500 33
6.3 Post-installation check 33

7 Electrical connection 34
7.1 Connection conditions 34
7.1.1 Required tools 34
7.1.2 Requirements for connecting cable . . . 34
7.1.3 Terminal assignment 38
7.1.4 Device plugs available 38
7.1.5 Pin assignment of device plug 39
7.1.6 Preparing the measuring device 39
7.2 Connecting the measuring device: Proline 500 - digital 40
7.2.1 Connecting the connecting cable 40
7.2.2 Connecting the transmitter 45
7.2.3 Integrating the transmitter into a network 48
7.3 Connecting the measuring device: Proline 500 50
7.3.1 Connecting the connecting cable 50
7.3.2 Connecting the transmitter 54
7.3.3 Integrating the transmitter into a network 57
7.4 Ensuring potential equalization 58
7.4.1 Requirements 58
7.5 Special connection instructions 59
7.5.1 Connection examples 59
7.6 Hardware settings 62
7.6.1 Setting the device address 62
7.6.2 Activating the default IP address 63
7.7 Ensuring the degree of protection 65
7.8 Post-connection check 65

8 Operation options 66
8.1 Overview of operation options 66

8.2 Structure and function of the operating menu . . . 67
8.2.1 Structure of the operating menu . . . 67
8.2.2 Operating philosophy . . . 68
8.3 Access to the operating menu via the local display . . . 69
8.3.1 Operational display . . . 69
8.3.2 Navigation view . . . 71
8.3.3 Editing view . . . 73
8.3.4 Operating elements . . . 75
8.3.5 Opening the context menu . . . 75
8.3.6 Navigating and selecting from list . . . 77
8.3.7 Calling the parameter directly . . . 77
8.3.8 Calling up help text . . . 78
8.3.9 Changing the parameters . . . 78
8.3.10 User roles and related access authorization . . . 79
8.3.11 Disabling write protection via access code . . . 79
8.3.12 Enabling and disabling the keypad lock . . . 80
8.4 Access to the operating menu via the Web browser . . . 80
8.4.1 Function range . . . 80
8.4.2 Prerequisites . . . 81
8.4.3 Establishing a connection . . . 82
8.4.4 Logging on . . . 85
8.4.5 User interface . . . 86
8.4.6 Disabling the Web server . . . 87
8.4.7 Logging out . . . 87
8.5 Access to the operating menu via the operating tool . . . 88
8.5.1 Connecting the operating tool . . . 88
8.5.2 FieldCare . . . 92
8.5.3 DeviceCare . . . 93

9 System integration . . . 94

9.1 Overview of device description files . . . 94
9.1.1 Current version data for the device . . . 94
9.1.2 Operating tools . . . 94
9.2 Overview of system files . . . 94
9.3 Integrating the measuring device in the system . . . 95
9.4 Cyclic data transmission . . . 95
9.4.1 Block model . . . 95
9.4.2 Input and output groups . . . 96
9.5 Diagnostic information via EtherNet/IP . . . 106

10 Commissioning . . . 111

10.1 Function check . . . 111
10.2 Switching on the measuring device . . . 111
10.3 Connecting via FieldCare . . . 111
10.4 Setting the operating language . . . 111
10.5 Configuring the measuring device . . . 112
10.5.1 Defining the tag name . . . 113
10.5.2 Setting the system units . . . 113
10.5.3 Configuring the communication interface . . . 115
10.5.4 Selecting and setting the medium . . . 117
10.5.5 Displaying the I/O configuration . . . 119
10.5.6 Configuring the current input . . . 119
10.5.7 Configuring the status input . . . 120
10.5.8 Configuring the current output . . . 121
10.5.9 Configuring the pulse/frequency/ switch output . . . 125
10.5.10 Configuring the relay output . . . 133
10.5.11 Configuring the local display . . . 136
10.5.12 Configuring the low flow cut off . . . 142
10.5.13 Configuring the partial filled pipe detection . . . 143
10.6 Advanced settings . . . 144
10.6.1 Using the parameter to enter the access code . . . 145
10.6.2 Calculated values . . . 145
10.6.3 Carrying out a sensor adjustment . . . 146
10.6.4 Configuring the totalizer . . . 147
10.6.5 Carrying out additional display configurations . . . 150
10.6.6 WLAN configuration . . . 156
10.6.7 Configuration management . . . 158
10.6.8 Using parameters for device administration . . . 159
10.7 Simulation . . . 161
10.8 Protecting settings from unauthorized access 164
10.8.1 Write protection via access code . . . 165
10.8.2 Write protection via write protection switch . . . 166

11 Operation . . . 169

11.1 Reading the device locking status . . . 169
11.2 Adjusting the operating language . . . 169
11.3 Configuring the display . . . 169
11.4 Reading measured values . . . 169
11.4.1 "Measured variables" submenu . . . 170
11.4.2 "Totalizer" submenu . . . 171
11.4.3 "Input values" submenu . . . 172
11.4.4 Output values . . . 173
11.5 Adapting the measuring device to the process conditions . . . 175
11.6 Performing a totalizer reset . . . 175
11.6.1 Function scope of the "Control Totalizer" parameter . . . 176
11.6.2 Function scope of the "Reset all totalizers" parameter . . . 176
11.7 Showing data logging . . . 176

12 Diagnostics and troubleshooting . . . 180

12.1 General troubleshooting . . . 180
12.2 Diagnostic information via light emitting diodes . . . 183
12.2.1 Transmitter . . . 183
12.2.2 Sensor connection housing . . . 185
12.3 Diagnostic information on local display . . . 186
12.3.1 Diagnostic message . . . 186
12.3.2 Calling up remedial measures . . . 188

12.4 Diagnostic information in the Web browser . 188
12.4.1 Diagnostic options 188
12.4.2 Calling up remedy information 189
12.5 Diagnostic information in FieldCare or DeviceCare 189
12.5.1 Diagnostic options 189
12.5.2 Calling up remedy information 190
12.6 Diagnostic information via communication interface 191
12.6.1 Reading out diagnostic information 191
12.7 Adapting the diagnostic information 191
12.7.1 Adapting the diagnostic behavior . . . 191
12.8 Overview of diagnostic information 192
12.8.1 Diagnostic of sensor 192
12.8.2 Diagnostic of electronic 193
12.8.3 Diagnostic of configuration 197
12.8.4 Diagnostic of process 202
12.9 Pending diagnostic events 205
12.10 Diagnostic list 206
12.11 Event logbook 206
12.11.1 Reading out the event logbook 206
12.11.2 Filtering the event logbook 207
12.11.3 Overview of information events 207
12.12 Resetting the measuring device 209
12.12.1 Function scope of the "Device reset" parameter 209
12.13 Device information 209
12.14 Firmware history 211

13 Maintenance 212

13.1 Maintenance tasks 212
13.1.1 Exterior cleaning 212
13.2 Measuring and test equipment 212
13.3 Endress+Hauser services 212

14 Repair 213

14.1 General notes 213
14.1.1 Repair and conversion concept 213
14.1.2 Notes for repair and conversion 213
14.2 Spare parts 213
14.3 Endress+Hauser services 213
14.4 Return 213
14.5 Disposal 214
14.5.1 Removing the measuring device 214
14.5.2 Disposing of the measuring device . . 214

15 Accessories 215

15.1 Device-specific accessories 215
15.1.1 For the transmitter 215
15.1.2 For the sensor 216
15.2 Communication-specific accessories 216
15.3 Service-specific accessories 217
15.4 System components 218

16 Technical data 219

16.1 Application 219
16.2 Function and system design 219
16.3 Input 220
16.4 Output 222
16.5 Power supply 227
16.6 Performance characteristics 229
16.7 Installation 233
16.8 Environment 233
16.9 Process 234
16.10 Mechanical construction 237
16.11 Human interface 240
16.12 Certificates and approvals 243
16.13 Application packages 246
16.14 Accessories 247
16.15 Supplementary documentation 247

Index 249

1 About this document

1.1 Document function

These Operating Instructions contain all the information that is required in various phases of the life cycle of the device: from product identification, incoming acceptance and storage, to mounting, connection, operation and commissioning through to troubleshooting, maintenance and disposal.

1.2 Symbols

1.2.1 Safety symbols

DANGER
This symbol alerts you to a dangerous situation. Failure to avoid this situation will result in serious or fatal injury.

WARNING
This symbol alerts you to a dangerous situation. Failure to avoid this situation can result in serious or fatal injury.

CAUTION
This symbol alerts you to a dangerous situation. Failure to avoid this situation can result in minor or medium injury.

NOTICE
This symbol contains information on procedures and other facts which do not result in personal injury.

1.2.2 Electrical symbols

Symbol	Meaning
⎓	Direct current
∼	Alternating current
≂	Direct current and alternating current
⏚	**Ground connection** A grounded terminal which, as far as the operator is concerned, is grounded via a grounding system.
⏚	**Protective Earth (PE)** A terminal which must be connected to ground prior to establishing any other connections. The ground terminals are situated inside and outside the device: ▪ Inner ground terminal: Connects the protectiv earth to the mains supply. ▪ Outer ground terminal: Connects the device to the plant grounding system.

1.2.3 Communication symbols

Symbol	Meaning
	Wireless Local Area Network (WLAN) Communication via a wireless, local network.
	LED Light emitting diode is off.

Symbol	Meaning
	LED Light emitting diode is on.
	LED Light emitting diode is flashing.

1.2.4 Tool symbols

Symbol	Meaning
	Torx screwdriver
	Phillips head screwdriver
	Open-ended wrench

1.2.5 Symbols for certain types of information

Symbol	Meaning
	Permitted Procedures, processes or actions that are permitted.
	Preferred Procedures, processes or actions that are preferred.
	Forbidden Procedures, processes or actions that are forbidden.
	Tip Indicates additional information.
	Reference to documentation.
	Reference to page.
	Reference to graphic.
▶	Notice or individual step to be observed.
1., 2., 3....	Series of steps.
↳	Result of a step.
	Help in the event of a problem.
	Visual inspection.

1.2.6 Symbols in graphics

Symbol	Meaning
1, 2, 3, ...	Item numbers
1., 2., 3., ...	Series of steps
A, B, C, ...	Views
A-A, B-B, C-C, ...	Sections
EX	Hazardous area

Symbol	Meaning
	Safe area (non-hazardous area)
	Flow direction

1.3 Documentation

For an overview of the scope of the associated Technical Documentation, refer to the following:
- *W@M Device Viewer* (www.endress.com/deviceviewer): Enter the serial number from nameplate
- *Endress+Hauser Operations App*: Enter the serial number from the nameplate or scan the 2D matrix code (QR code) on the nameplate

Detailed list of the individual documents along with the documentation code → 247

1.3.1 Standard documentation

Document type	Purpose and content of the document
Technical Information	**Planning aid for your device** The document contains all the technical data on the device and provides an overview of the accessories and other products that can be ordered for the device.
Sensor Brief Operating Instructions	**Guides you quickly to the 1st measured value - Part 1** The Sensor Brief Operating Instructions are aimed at specialists with responsibility for installing the measuring device. ▪ Incoming acceptance and product identification ▪ Storage and transport ▪ Installation
Transmitter Brief Operating Instructions	**Guides you quickly to the 1st measured value - Part 2** The Transmitter Brief Operating Instructions are aimed at specialists with responsibility for commissioning, configuring and parameterizing the measuring device (until the first measured value). ▪ Product description ▪ Installation ▪ Electrical connection ▪ Operation options ▪ System integration ▪ Commissioning ▪ Diagnostic information
Description of Device Parameters	**Reference for your parameters** The document provides a detailed explanation of each individual parameter in the Expert operating menu. The description is aimed at those who work with the device over the entire life cycle and perform specific configurations.

1.3.2 Supplementary device-dependent documentation

Additional documents are supplied depending on the device version ordered: Always comply strictly with the instructions in the supplementary documentation. The supplementary documentation is an integral part of the device documentation.

1.4 Registered trademarks

EtherNet/IP™
Trademark of ODVA, Inc.

2 Safety instructions

2.1 Requirements for the personnel

The personnel for installation, commissioning, diagnostics and maintenance must fulfill the following requirements:
- Trained, qualified specialists must have a relevant qualification for this specific function and task.
- Are authorized by the plant owner/operator.
- Are familiar with federal/national regulations.
- Before starting work, read and understand the instructions in the manual and supplementary documentation as well as the certificates (depending on the application).
- Follow instructions and comply with basic conditions.

The operating personnel must fulfill the following requirements:
- Are instructed and authorized according to the requirements of the task by the facility's owner-operator.
- Follow the instructions in this manual.

2.2 Designated use

Application and media
The measuring device described in this manual is intended only for the flow measurement of liquids and gases.

Depending on the version ordered, the measuring device can also measure potentially explosive, flammable, poisonous and oxidizing media.

Measuring devices for use in hazardous areas, in hygienic applications or where there is an increased risk due to process pressure, are labeled accordingly on the nameplate.

To ensure that the measuring device remains in proper condition for the operation time:
- Keep within the specified pressure and temperature range.
- Only use the measuring device in full compliance with the data on the nameplate and the general conditions listed in the Operating Instructions and supplementary documentation.
- Based on the nameplate, check whether the ordered device is permitted for the intended use in the hazardous area (e.g. explosion protection, pressure vessel safety).
- Use the measuring device only for media to which the process-wetted materials are sufficiently resistant.
- If the ambient temperature of the measuring device is outside the atmospheric temperature, it is absolutely essential to comply with the relevant basic conditions as specified in the device documentation→ 📄 8.
- Protect the measuring device permanently against corrosion from environmental influences.

Incorrect use
Non-designated use can compromise safety. The manufacturer is not liable for damage caused by improper or non-designated use.

⚠ WARNING

Danger of breakage due to corrosive or abrasive fluids and ambient conditions!
- Verify the compatibility of the process fluid with the sensor material.
- Ensure the resistance of all fluid-wetted materials in the process.
- Keep within the specified pressure and temperature range.

NOTICE

Verification for borderline cases:

- For special fluids and fluids for cleaning, Endress+Hauser is glad to provide assistance in verifying the corrosion resistance of fluid-wetted materials, but does not accept any warranty or liability as minute changes in the temperature, concentration or level of contamination in the process can alter the corrosion resistance properties.

Residual risks

WARNING

The electronics and the medium may cause the surfaces to heat up. This presents a burn hazard!

- For elevated fluid temperatures, ensure protection against contact to prevent burns.

2.3 Workplace safety

For work on and with the device:

- Wear the required personal protective equipment according to federal/national regulations.

For welding work on the piping:

- Do not ground the welding unit via the measuring device.

If working on and with the device with wet hands:

- Due to the increased risk of electric shock, gloves must be worn.

2.4 Operational safety

Risk of injury.

- Operate the device in proper technical condition and fail-safe condition only.
- The operator is responsible for interference-free operation of the device.

Conversions to the device

Unauthorized modifications to the device are not permitted and can lead to unforeseeable dangers.

- If, despite this, modifications are required, consult with Endress+Hauser.

Repair

To ensure continued operational safety and reliability,

- Carry out repairs on the device only if they are expressly permitted.
- Observe federal/national regulations pertaining to repair of an electrical device.
- Use original spare parts and accessories from Endress+Hauser only.

2.5 Product safety

This measuring device is designed in accordance with good engineering practice to meet state-of-the-art safety requirements, has been tested, and left the factory in a condition in which it is safe to operate.

It meets general safety standards and legal requirements. It also complies with the EU directives listed in the device-specific EU Declaration of Conformity. Endress+Hauser confirms this by affixing the CE mark to the device.

2.6 IT security

Our warranty is valid only if the device is installed and used as described in the Operating Instructions. The device is equipped with security mechanisms to protect it against any inadvertent changes to the settings.

IT security measures, which provide additional protection for the device and associated data transfer, must be implemented by the operators themselves in line with their security standards.

2.7 Device-specific IT security

The device offers a range of specific functions to support protective measures on the operator's side. These functions can be configured by the user and guarantee greater in-operation safety if used correctly. An overview of the most important functions is provided in the following section.

Function/interface	Factory setting	Recommendation
Write protection via hardware write protection switch → 🗎 11	Not enabled.	On an individual basis following risk assessment.
Access code (also applies for Web server login or FieldCare connection) → 🗎 12	Not enabled (0000).	Assign a customized access code during commissioning.
WLAN (order option in display module)	Enabled.	On an individual basis following risk assessment.
WLAN security mode	Enabled (WPA2-PSK)	Do not change.
WLAN passphrase (password) → 🗎 12	Serial number	Assign an individual WLAN passphrase during commissioning.
WLAN mode	Access Point	On an individual basis following risk assessment.
Web server→ 🗎 12	Enabled.	On an individual basis following risk assessment.
CDI-RJ45 service interface → 🗎 13	–	On an individual basis following risk assessment.

2.7.1 Protecting access via hardware write protection

Write access to the device parameters via the local display, Web browser or operating tool (e.g. FieldCare, DeviceCare) can be disabled via a write protection switch (DIP switch on the motherboard). When hardware write protection is enabled, only read access to the parameters is possible.

Hardware write protection is disabled when the device is delivered → 🗎 166.

2.7.2 Protecting access via a password

Different passwords are available to protect write access to the device parameters or access to the device via the WLAN interface.

- User-specific access code
  Protect write access to the device parameters via the local display, Web browser or operating tool (e.g. FieldCare, DeviceCare). Access authorization is clearly regulated through the use of a user-specific access code.
- WLAN passphrase
  The network key protects a connection between an operating unit (e.g. notebook or tablet) and the device via the WLAN interface which can be ordered as an option.
- Infrastructure mode
  When the device is operated in infrastructure mode, the WLAN passphrase corresponds to the WLAN passphrase configured on the operator side.

User-specific access code

Write access to the device parameters via the local display, Web browser or operating tool (e.g. FieldCare, DeviceCare) can be protected by the modifiable, user-specific access code (→ 🗎 165).

When the device is delivered, the device does not have an access code and is equivalent to *0000* (open).

WLAN passphrase: Operation as WLAN access point

A connection between an operating unit (e.g. notebook or tablet) and the device via the WLAN interface (→ 🗎 90), which can be ordered as an optional extra, is protected by the network key. The WLAN authentication of the network key complies with the IEEE 802.11 standard.

When the device is delivered, the network key is pre-defined depending on the device. It can be changed via the **WLAN settings** submenu in the **WLAN passphrase** parameter (→ 🗎 158).

Infrastructure mode

A connection between the device and WLAN access point is protected by means of an SSID and passphrase on the system side. Please contact the relevant system administrator for access.

General notes on the use of passwords

- The access code and network key supplied with the device should be changed during commissioning.
- Follow the general rules for generating a secure password when defining and managing the access code or network key.
- The user is responsible for the management and careful handling of the access code and network key.
- For information on configuring the access code or on what to do if you lose the password, see the "Write protection via access code" section → 🗎 165

2.7.3 Access via Web server

The device can be operated and configured via a Web browser with the integrated Web server (→ 🗎 80). The connection is via the service interface (CDI-RJ45), the connection for EtherNet/IP signal transmission (RJ45 connector) or the WLAN interface.

The Web server is enabled when the device is delivered. The Web server can be disabled if necessary (e.g. after commissioning) via the **Web server functionality** parameter.

The device and status information can be hidden on the login page. This prevents unauthorized access to the information.

For detailed information on device parameters, see:
The "Description of Device Parameters" document → 🗎 248.

2.7.4 Access via service interface (CDI-RJ45)

The device can be connected to a network via the service interface (CDI-RJ45). Device-specific functions guarantee the secure operation of the device in a network.

The use of relevant industrial standards and guidelines that have been defined by national and international safety committees, such as IEC/ISA62443 or the IEEE, is recommended. This includes organizational security measures such as the assignment of access authorization as well as technical measures such as network segmentation.

Transmitters with an Ex de approval may not be connected via the service interface (CDI-RJ45)!

Order code for "Approval transmitter + sensor", options (Ex de): BA, BB, C1, C2, GA, GB, MA, MB, NA, NB

The device can be integrated in a ring topology. The device is integrated via the terminal connection for signal transmission (output 1) and the connection to the service interface (CDI-RJ45) → 🗎 58 or → 🗎 49.

3 Product description

The measuring system consists of a transmitter and a sensor. The transmitter and sensor are mounted in physically separate locations. They are interconnected by connecting cables.

3.1 Product design

Two versions of the transmitter are available.

3.1.1 Proline 500 – digital

Signal transmission: digital
Order code for "Integrated ISEM electronics", option **A** "Sensor"

For use in applications not required to meet special requirements due to ambient or operating conditions.

As the electronics are located in the sensor, the device is ideal:
For simple transmitter replacement.

- A standard cable can be used as the connecting cable.
- Not sensitive to external EMC interference.

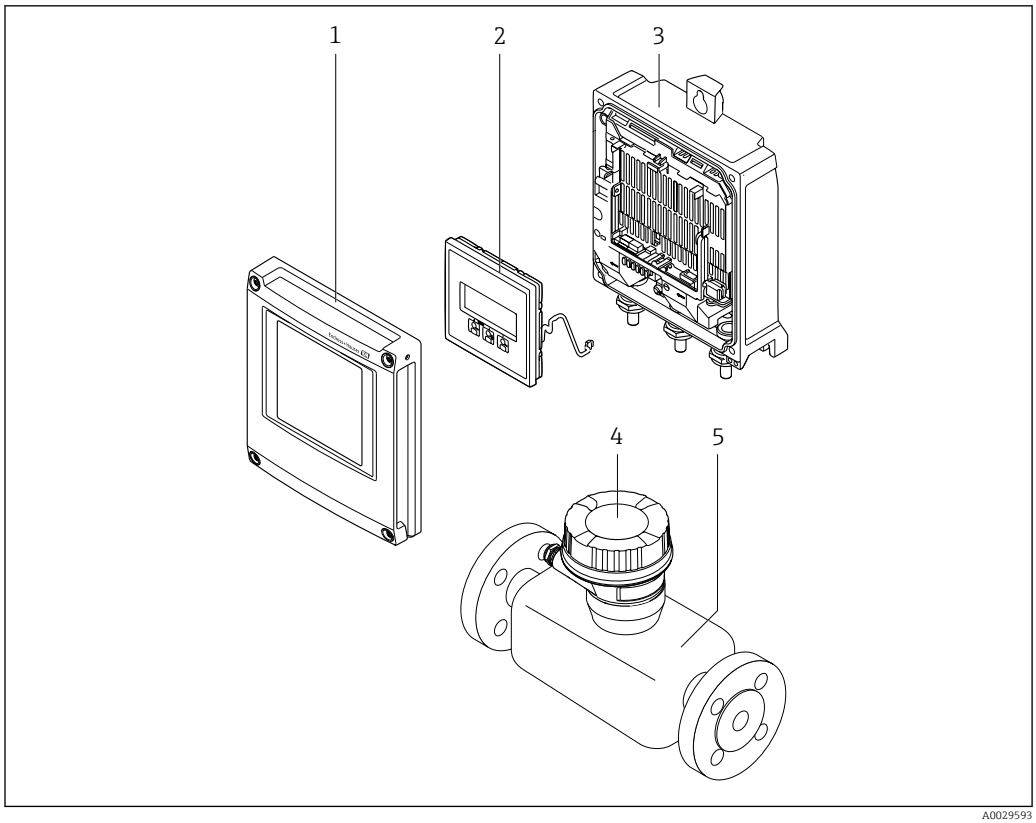

1 Important components of a measuring device

1 Electronics compartment cover
2 Display module
3 Transmitter housing
4 Sensor connection housing with integrated ISEM electronics: connecting cable connection
5 Sensor

3.1.2 Proline 500

Signal transmission: analog
Order code for "Integrated ISEM electronics", option **B** "Transmitter"

For use in applications required to meet special requirements due to ambient or operating conditions.

As the electronics are located in the transmitter, the device is ideal in the event of:
- Strong vibrations at the sensor.
- Sensor operation in underground installations.
- Permanent sensor immersion in water.

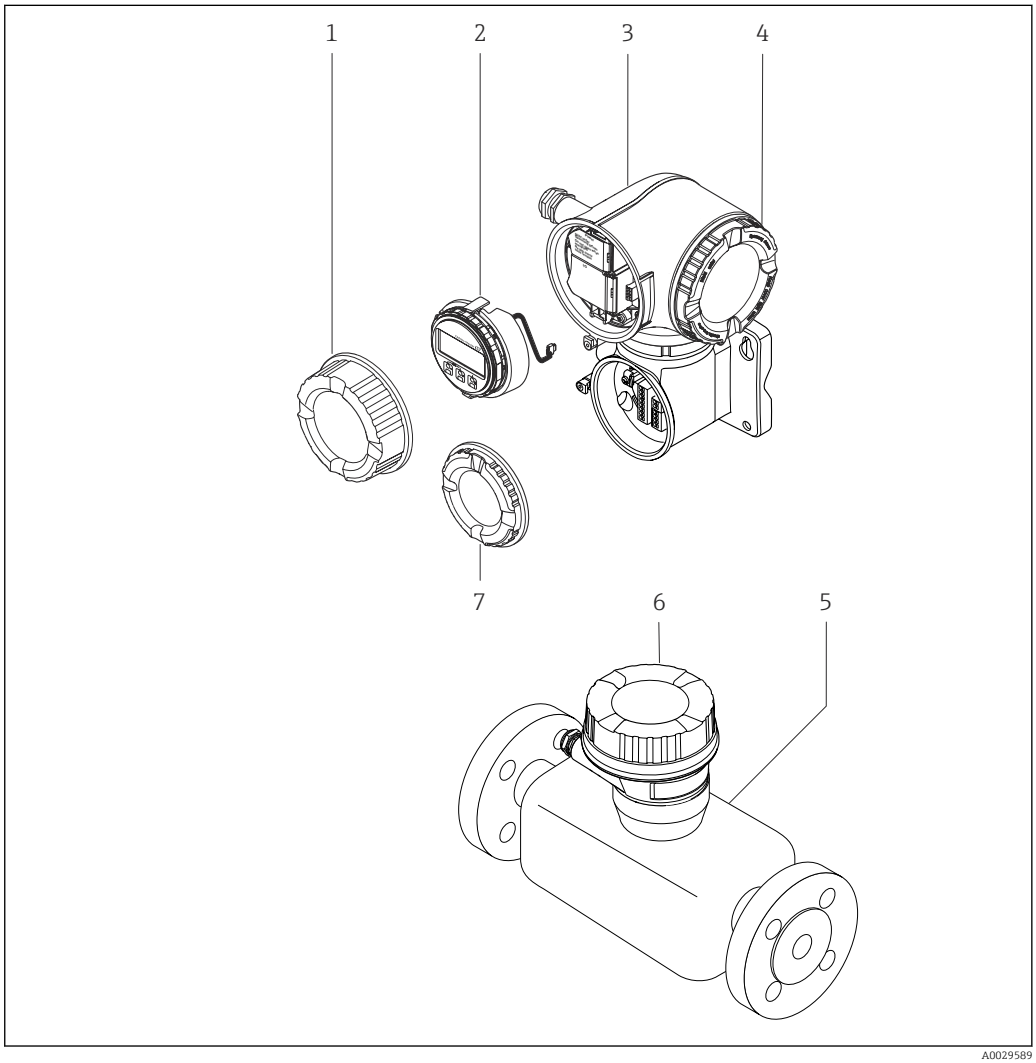

2 Important components of a measuring device

1 Connection compartment cover
2 Display module
3 Transmitter housing with integrated ISEM electronics
4 Electronics compartment cover
5 Sensor
6 Sensor connection housing: connecting cable connection
7 Connection compartment cover: connecting cable connection

4 Incoming acceptance and product identification

4.1 Incoming acceptance

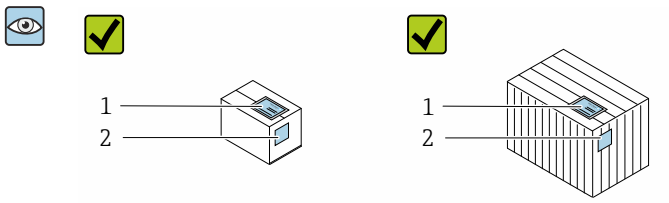

Are the order codes on the delivery note (1) and the product sticker (2) identical?

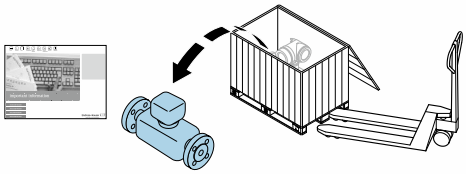

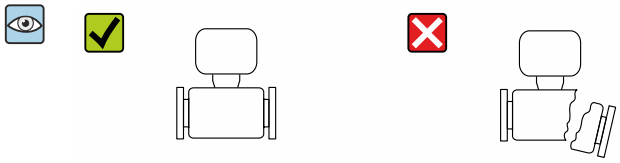

Are the goods undamaged?

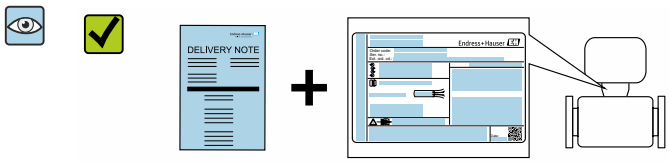

Do the nameplate data match the ordering information on the delivery note?

Is the envelope present with accompanying documents?

- If one of the conditions is not satisfied, contact your Endress+Hauser Sales Center.
- Depending on the device version, the CD-ROM might not be part of the delivery! The Technical Documentation is available via the Internet or via the *Endress+Hauser Operations App*, see the "Product identification" section → 17.

4.2 Product identification

The following options are available for identification of the device:
- Nameplate specifications
- Order code with breakdown of the device features on the delivery note
- Enter serial numbers from nameplates in the *W@M Device Viewer* (www.endress.com/deviceviewer): All information about the device is displayed.
- Enter the serial number from nameplates in the *Endress+Hauser Operations App* or scan the 2-D matrix code (QR code) on the nameplate using the *Endress+Hauser Operations App*: All information about the device is displayed.

For an overview of the scope of the associated Technical Documentation, refer to the following:

- The "Additional standard documentation on the device"→ 📄 8 and "Supplementary device-dependent documentation"→ 📄 8 sections
- The *W@M Device Viewer*: enter the serial number from the nameplate (www.endress.com/deviceviewer)
- The *Endress+Hauser Operations App*: Enter the serial number from the nameplate or scan the 2-D matrix code (QR code) on the nameplate.

4.2.1 Transmitter nameplate

Proline 500 – digital

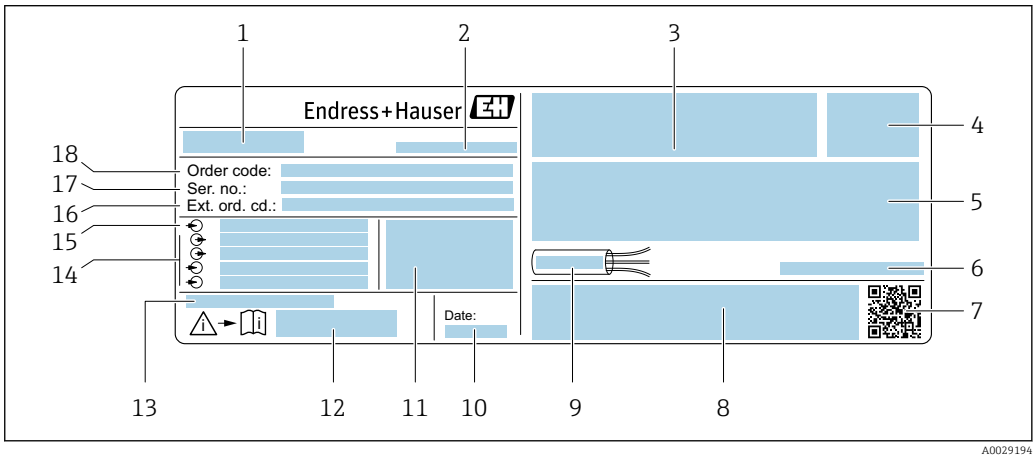

3 Example of a transmitter nameplate

1 *Name of the transmitter*
2 *Manufacturing location*
3 *Space for approvals: use in hazardous areas*
4 *Degree of protection*
5 *Electrical connection data: available inputs and outputs*
6 *Permitted ambient temperature (T_a)*
7 *2-D matrix code*
8 *Space for approvals and certificates: e.g. CE mark, C-Tick*
9 *Permitted temperature range for cable*
10 *Manufacturing date: year-month*
11 *Firmware version (FW) and device revision (Dev.Rev.) from the factory*
12 *Document number of safety-related supplementary documentation*
13 *Space for additional information in the case of special products*
14 *Available inputs and outputs, supply voltage*
15 *Electrical connection data: supply voltage*
16 *Extended order code (ext. ord. cd.)*
17 *Serial number (ser. no.)*
18 *Order code*

Proline 500

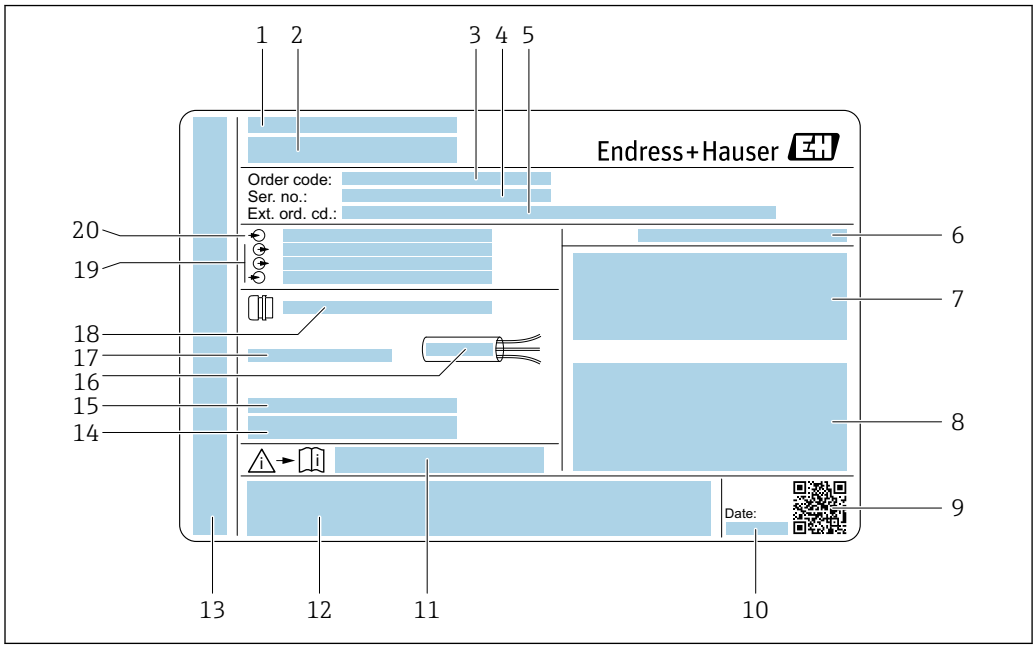

4 *Example of a transmitter nameplate*

1 *Manufacturing location*
2 *Name of the transmitter*
3 *Order code*
4 *Serial number (ser. no.)*
5 *Extended order code (ext. ord. cd.)*
6 *Degree of protection*
7 *Space for approvals: use in hazardous areas*
8 *Electrical connection data: available inputs and outputs*
9 *2-D matrix code*
10 *Manufacturing date: year-month*
11 *Document number of safety-related supplementary documentation*
12 *Space for approvals and certificates: e.g. CE mark, C-Tick*
13 *Space for degree of protection of connection and electronics compartment when used in hazardous areas*
14 *Firmware version (FW) and device revision (Dev.Rev.) from the factory*
15 *Space for additional information in the case of special products*
16 *Permitted temperature range for cable*
17 *Permitted ambient temperature (T_a)*
18 *Information on cable gland*
19 *Available inputs and outputs, supply voltage*
20 *Electrical connection data: supply voltage*

4.2.2 Sensor nameplate

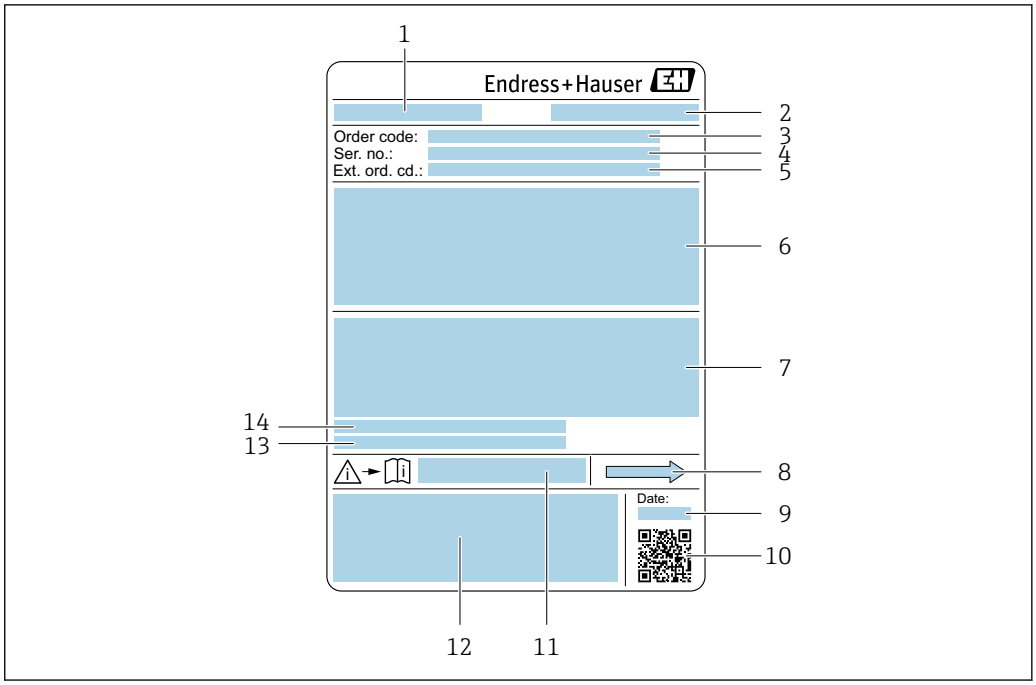

5 *Example of a sensor nameplate*

1 *Name of the sensor*
2 *Manufacturing location*
3 *Order code*
4 *Serial number (ser. no.)*
5 *Extended order code (Ext. ord. cd.)*
6 *Nominal diameter of the sensor; flange nominal diameter/nominal pressure; sensor test pressure; medium temperature range; material of measuring tube and manifold; sensor-specific information: e.g. pressure range of sensor housing, wide-range density specification (special density calibration)*
7 *Approval information for explosion protection, Pressure Equipment Directive and degree of protection*
8 *Flow direction*
9 *Manufacturing date: year-month*
10 *2-D matrix code*
11 *Document number of safety-related supplementary documentation*
12 *CE mark, C-Tick*
13 *Surface roughness*
14 *Permitted ambient temperature (T_a)*

Order code
The measuring device is reordered using the order code.

Extended order code
- The device type (product root) and basic specifications (mandatory features) are always listed.
- Of the optional specifications (optional features), only the safety and approval-related specifications are listed (e.g. LA). If other optional specifications are also ordered, these are indicated collectively using the # placeholder symbol (e.g. #LA#).
- If the ordered optional specifications do not include any safety and approval-related specifications, they are indicated by the + placeholder symbol (e.g. XXXXXX-ABCDE +).

4.2.3 Symbols on measuring device

Symbol	Meaning
⚠	**WARNING!** This symbol alerts you to a dangerous situation. Failure to avoid this situation can result in serious or fatal injury.
📖	**Reference to documentation** Refers to the corresponding device documentation.
⏚	**Protective ground connection** A terminal which must be connected to ground prior to establishing any other connections.

5 Storage and transport

5.1 Storage conditions

Observe the following notes for storage:
- ▶ Store in the original packaging to ensure protection from shock.
- ▶ Do not remove protective covers or protective caps installed on process connections. They prevent mechanical damage to the sealing surfaces and contamination in the measuring tube.
- ▶ Protect from direct sunlight to avoid unacceptably high surface temperatures.
- ▶ Store in a dry and dust-free place.
- ▶ Do not store outdoors.

Storage temperature→ 233

5.2 Transporting the product

Transport the measuring device to the measuring point in the original packaging.

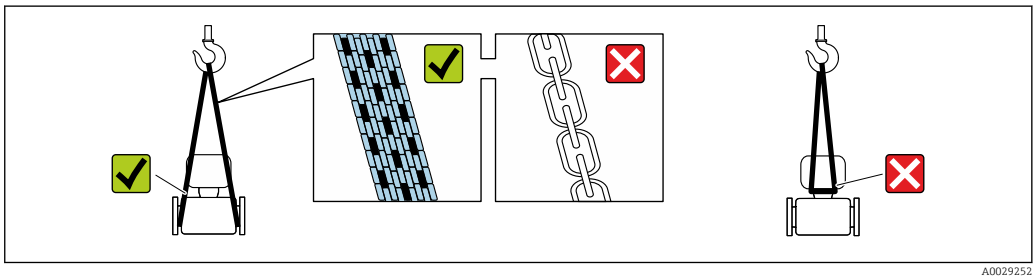

A0029252

Do not remove protective covers or caps installed on process connections. They prevent mechanical damage to the sealing surfaces and contamination in the measuring tube.

5.2.1 Measuring devices without lifting lugs

WARNING

Center of gravity of the measuring device is higher than the suspension points of the webbing slings.

Risk of injury if the measuring device slips.
- ▶ Secure the measuring device against slipping or turning.
- ▶ Observe the weight specified on the packaging (stick-on label).

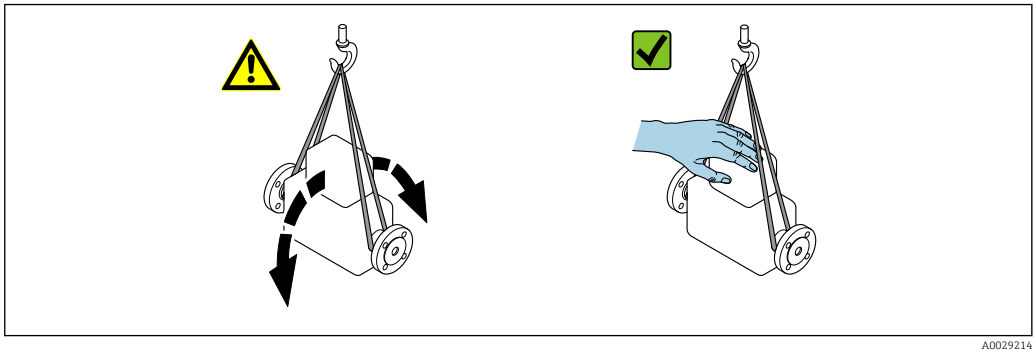

A0029214

5.2.2 Measuring devices with lifting lugs

⚠ CAUTION

Special transportation instructions for devices with lifting lugs

- ▶ Only use the lifting lugs fitted on the device or flanges to transport the device.
- ▶ The device must always be secured at two lifting lugs at least.

5.2.3 Transporting with a fork lift

If transporting in wood crates, the floor structure enables the crates to be lifted lengthwise or at both sides using a forklift.

5.3 Packaging disposal

All packaging materials are environmentally friendly and 100 % recyclable:

- Outer packaging of device
  Polymer stretch wrap that complies with EU Directive 2002/95/EC (RoHS)
- Packaging
  - Wooden crate treated in accordance with ISPM 15 standard, confirmed by IPPC logo
  - Cardboard box in accordance with European packaging guideline 94/62EC, recyclability confirmed by Resy symbol
- Carrying and securing materials
  - Disposable plastic pallet
  - Plastic straps
  - Plastic adhesive strips
- Filler material
  Paper pads

6 Installation

6.1 Installation conditions

6.1.1 Mounting position

Mounting location

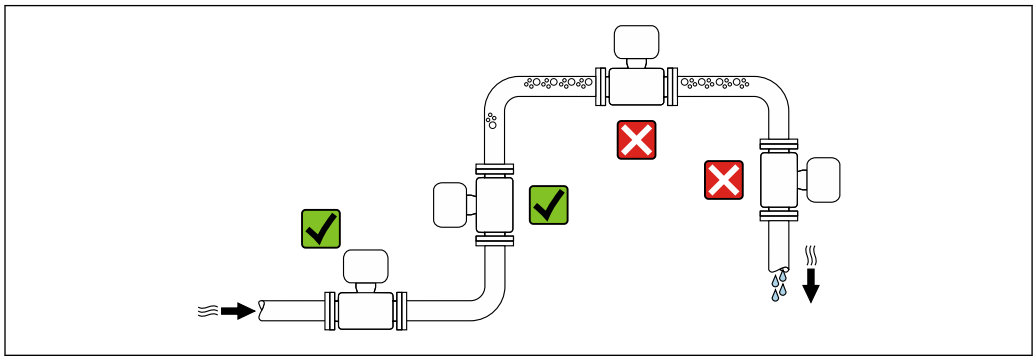

A0028772

To prevent measuring errors arising from accumulation of gas bubbles in the measuring tube, avoid the following mounting locations in the pipe:

- Highest point of a pipeline.
- Directly upstream of a free pipe outlet in a down pipe.

Installation in down pipes

However, the following installation suggestion allows for installation in an open vertical pipeline. Pipe restrictions or the use of an orifice with a smaller cross-section than the nominal diameter prevent the sensor running empty while measurement is in progress.

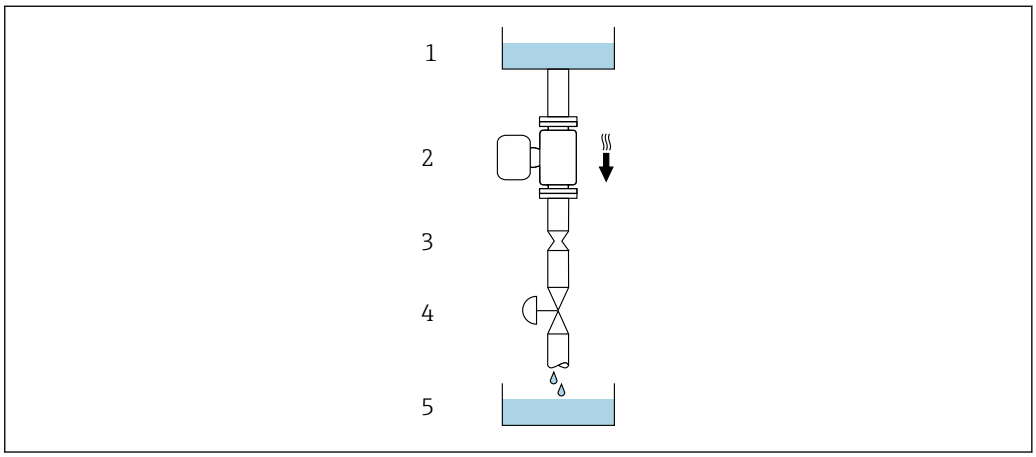

6 Installation in a down pipe (e.g. for batching applications)

1 Supply tank
2 Sensor
3 Orifice plate, pipe restriction
4 Valve
5 Batching tank

DN		Ø orifice plate, pipe restriction	
[mm]	[in]	[mm]	[in]
25	1	14	0.55
50	2	28	1.10
80	3	50	1.97
100	4	65	2.60

Orientation

The direction of the arrow on the sensor nameplate helps you to install the sensor according to the flow direction (direction of medium flow through the piping).

Orientation			Recommendation
A	Vertical orientation	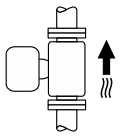 A0015591	✓✓ [1]
B	Horizontal orientation, transmitter at top	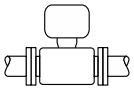 A0015589	✓✓ [2] Exceptions: → 7, 24

Orientation			Recommendation
C	Horizontal orientation, transmitter at bottom	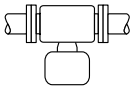 A0015590	✓✓ [3] Exceptions: → 7, 24
D	Horizontal orientation, transmitter at side	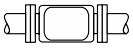 A0015592	✓✓ → 25 [4]

1) This orientation is recommended to ensure self-draining.
2) Applications with low process temperatures may decrease the ambient temperature. To maintain the minimum ambient temperature for the transmitter, this orientation is recommended.
3) Applications with high process temperatures may increase the ambient temperature. To maintain the maximum ambient temperature for the transmitter, this orientation is recommended.
4) Not recommended for inhomogeneous media.

If a sensor is installed horizontally with a curved measuring tube, match the position of the sensor to the fluid properties.

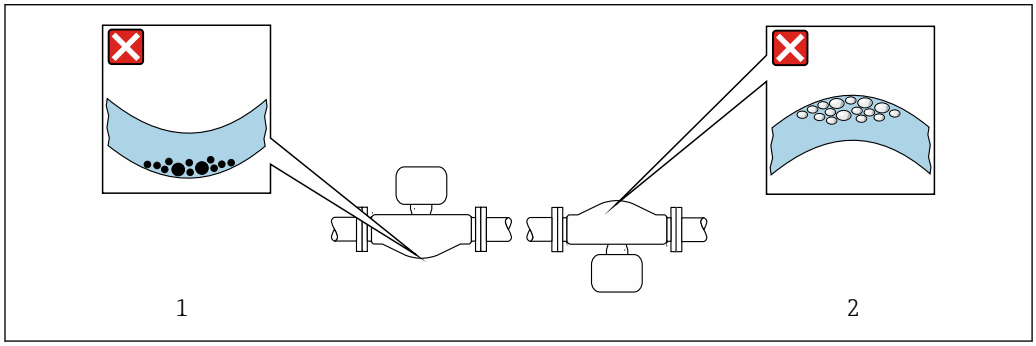

A0028774

7 Orientation of sensor with curved measuring tube

1 Avoid this orientation for fluids with entrained solids: Risk of solids accumulating.
2 Avoid this orientation for outgassing fluids: Risk of gas accumulating.

Inlet and outlet runs

No special precautions need to be taken for fittings that create turbulence, such as valves, elbows or T-pieces, as long as no cavitation occurs.

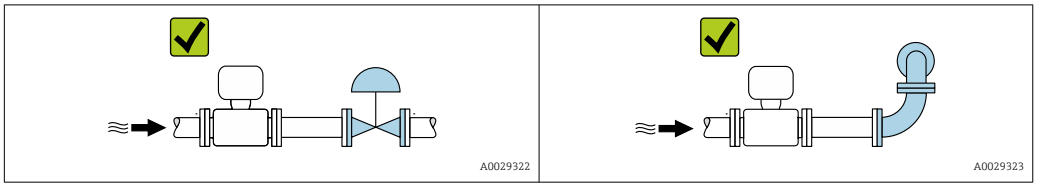

Installation dimensions

For the dimensions and installation lengths of the device, see the "Technical Information" document, "Mechanical construction" section .

6.1.2 Environmental and process requirements

Ambient temperature range

Measuring device	▪ −40 to +60 °C (−40 to +140 °F)
	▪ Order code for "Test, certificate", option JP: −50 to +60 °C (−58 to +140 °F)
	▪ Order code for "Test, certificate", option JQ:
	  ▪ Sensor:−60 to +60 °C (−76 to +140 °F)
	  ▪ Transmitter: −50 to +60 °C (−58 to +140 °F)

Readability of the local display	−20 to +60 °C (−4 to +140 °F) The readability of the display may be impaired at temperatures outside the temperature range.

Dependency of ambient temperature on medium temperature→ 📄 234

- If operating outdoors:
  Avoid direct sunlight, particularly in warm climatic regions.

You can order a weather protection cover from Endress+Hauser. → 📄 215.

Vibrations

The operational reliability of the measuring system is not affected by plant vibrations.

6.1.3 Special mounting instructions

Drainability

The measuring tubes can be completely drained and protected against solids build-up in vertical orientation.

Sanitary compatibility

When installing in hygienic applications, please refer to the information in the "Certificates and approvals/hygienic compatibility" section → 📄 244

Rupture disk

Information that is relevant to the process: → 📄 236.

⚠ WARNING

Danger from medium escaping!
Medium escaping under pressure can cause injury or material damage.
- Take precautions to prevent danger to persons and damage if the rupture disk is actuated.
- Observe information on the rupture disk sticker.
- Make sure that the function and operation of the rupture disk is not impeded through the installation of the device.
- Do not use a heating jacket.
- Do not remove or damage the rupture disk.

The position of the rupture disk is indicated by a sticker beside it.

The transportation guard must be removed.

The existing connecting nozzles are not intended for the purpose of rinsing or pressure monitoring, but instead serve as the mounting location for the rupture disk.

In the event of a failure of the rupture disk, a drain device can be screwed onto the female thread of the rupture disk in order to drain off any escaping medium.

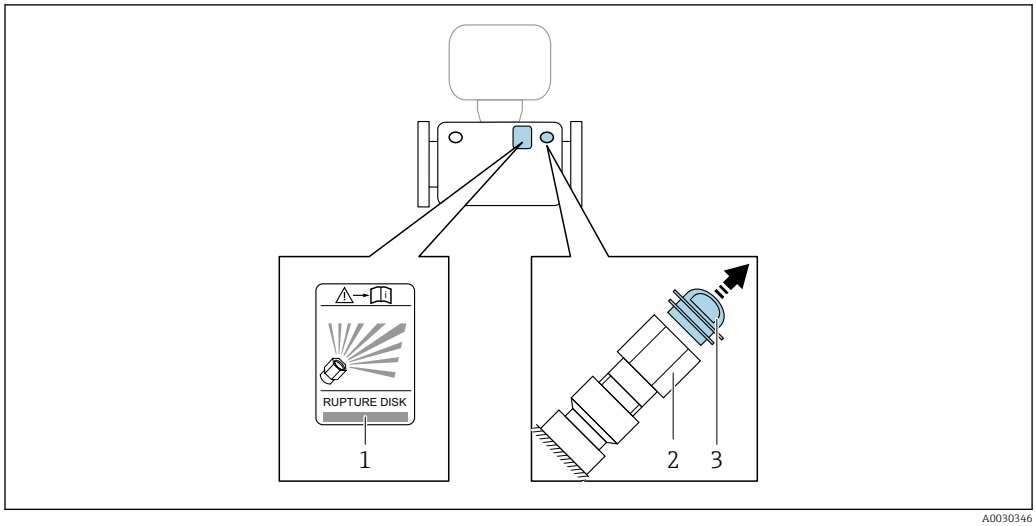

1 Rupture disk label
2 Rupture disk with 1/2" NPT female thread and 1" width across flat
3 Transportation guard

For information on the dimensions: see the "Mechanical construction" section of the "Technical Information" document

Zero point adjustment

All measuring devices are calibrated in accordance with state-of-the-art technology. Calibration takes place under reference conditions→ 229. Therefore, a zero point adjustment in the field is generally not required.

Experience shows that zero point adjustment is advisable only in special cases:
- To achieve maximum measuring accuracy even with low flow rates.
- Under extreme process or operating conditions (e.g. very high process temperatures or very high-viscosity fluids).

Protective cover

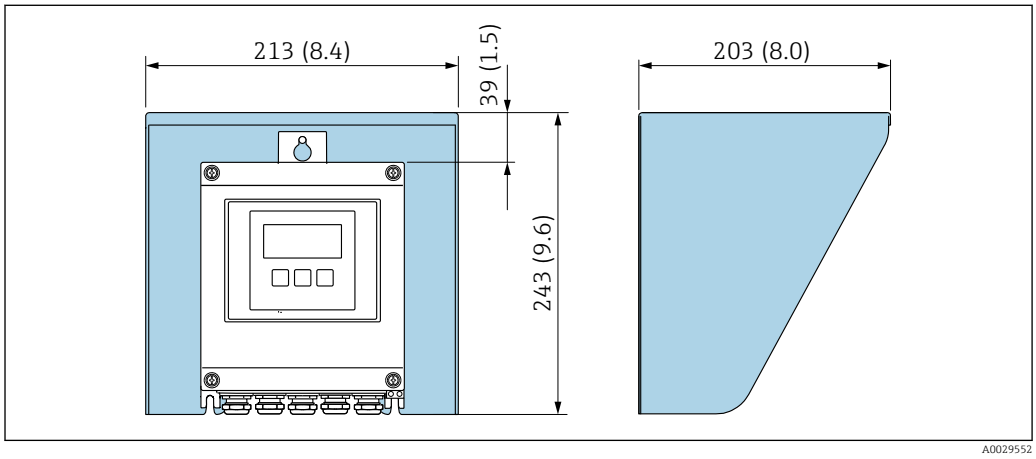

8 Protective cover for Proline 500 – digital; engineering unit mm (in)

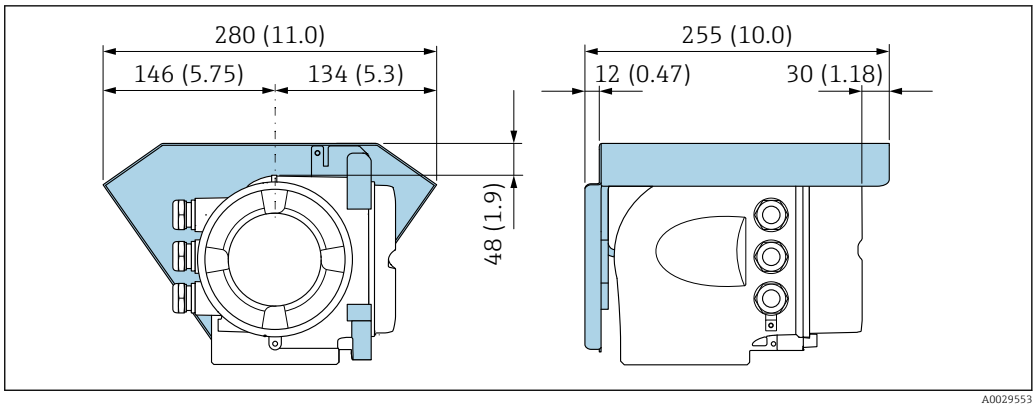

9 *Protective cover for Proline 500; engineering unit mm (in)*

Cover locking: Proline 500

NOTICE

Order code for "Transmitter housing", option L "Cast, stainless": The covers of the transmitter housing are provided with a borehole to lock the cover.

The cover can be locked using screws and a chain or cable provided by the customer.

- It is recommended to use stainless steel cables or chains.
- If a protective coating is applied, it is recommended to use a heat shrink tube to protect the housing paint.

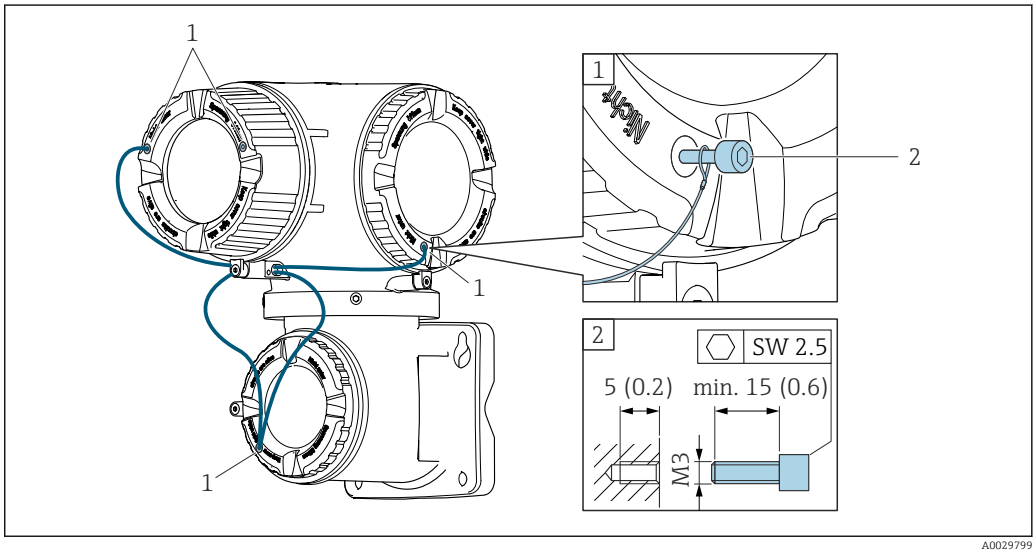

1 *Cover borehole for the securing screw*
2 *Securing screw to lock the cover*

Determining the pitch angle and roll angle

For correct measurement, the pitch angle and roll angle must be determined and entered in the **Installation angle pitch** parameter (→ 147) and the **Installation angle roll** parameter (→ 147) with a tolerance of ±10 °.

Pitch angle	Roll angle
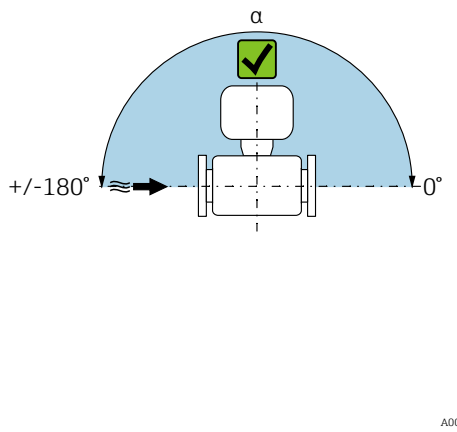	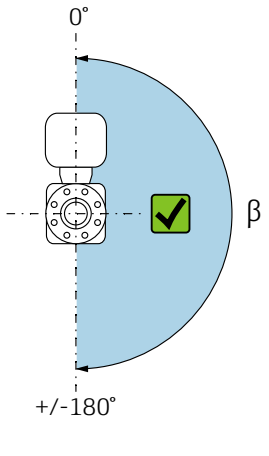
The possible pitch angle that can be configured is the blue area of angle **α**.	The possible roll angle that can be configured is the blue area of angle **β**.

6.2 Mounting the measuring device

6.2.1 Required tools

For transmitter

For mounting on a post:
- Proline 500 – digital transmitter
  - Open-ended wrench AF 10
  - Torx screwdriver TX 25
- Proline 500 transmitter
  Open-ended wrench AF 13

For wall mounting:
Drill with drill bit Ø 6.0 mm

For sensor

For flanges and other process connections: Corresponding mounting tools

6.2.2 Preparing the measuring device

1. Remove all remaining transport packaging.
2. Remove any protective covers or protective caps present from the sensor.
3. Remove stick-on label on the electronics compartment cover.

6.2.3 Mounting the measuring device

⚠ WARNING

Danger due to improper process sealing!
- ▶ Ensure that the inside diameters of the gaskets are greater than or equal to that of the process connections and piping.
- ▶ Ensure that the seals are clean and undamaged.
- ▶ Secure the seals correctly.

1. Ensure that the direction of the arrow on the nameplate of the sensor matches the flow direction of the fluid.

2. Install the measuring device or turn the transmitter housing so that the cable entries do not point upwards.

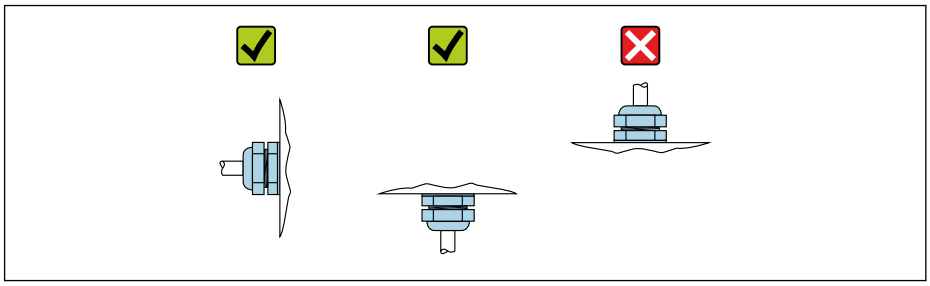

A0029263

6.2.4 Mounting the transmitter housing: Proline 500 – digital

⚠ CAUTION

Ambient temperature too high!

Danger of electronics overheating and housing deformation.

- ▶ Do not exceed the permitted maximum ambient temperature .
- ▶ If operating outdoors: Avoid direct sunlight and exposure to weathering, particularly in warm climatic regions.

⚠ CAUTION

Excessive force can damage the housing!

- ▶ Avoid excessive mechanical stress.

The transmitter can be mounted in the following ways:

- Post mounting
- Wall mounting

Post mounting

⚠ WARNING

Excessive tightening torque applied to the fixing screws!

Risk of damaging the plastic transmitter.

- ▶ Tighten the fixing screws as per the tightening torque: 2 Nm (1.5 lbf ft)

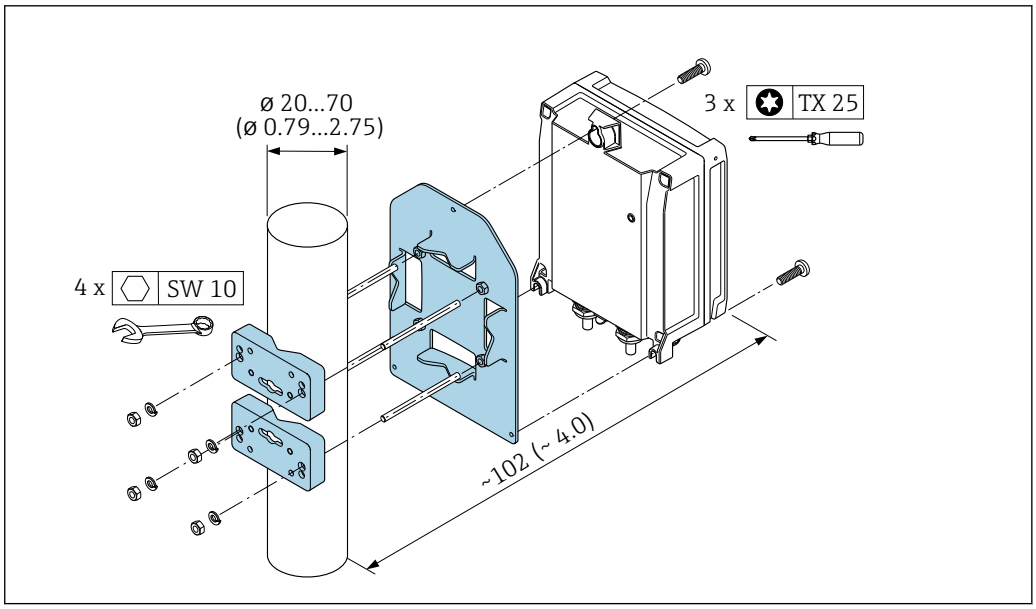

A0029051

10 *Engineering unit mm (in)*

Wall mounting

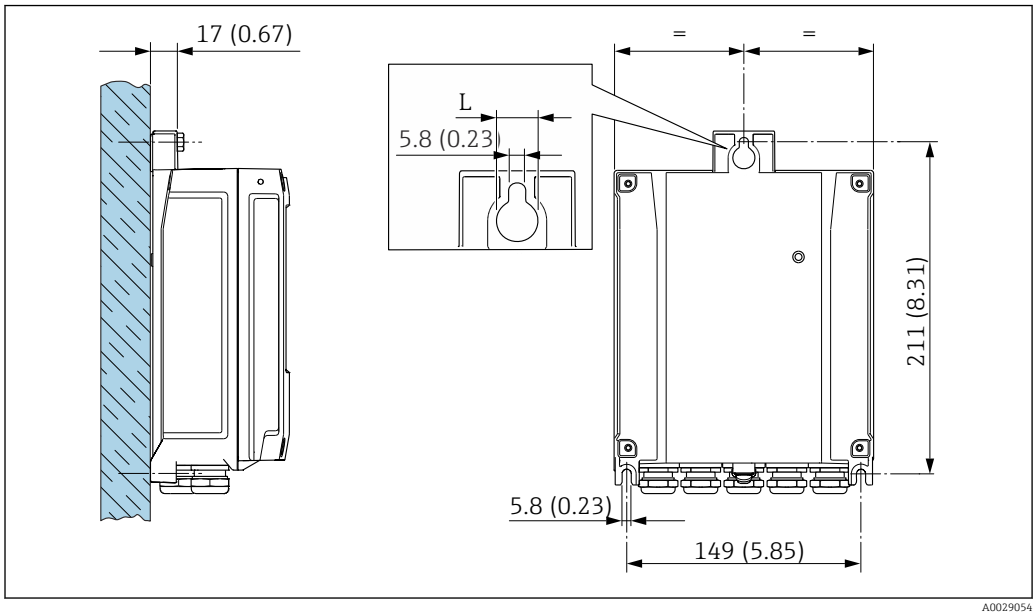

11 Engineering unit mm (in)

L Depends on order code for "Transmitter housing"

Order code for "Transmitter housing"
- Option **A**, aluminum coated: L =14 mm (0.55 in)
- Option **D**, polycarbonate: L = 13 mm (0.51 in)

1. Drill the holes.
2. Insert wall plugs into the drilled holes.
3. Screw in the securing screws slightly at first.
4. Fit the transmitter housing over the securing screws and mount in place.
5. Tighten the securing screws.

6.2.5 Mounting the transmitter housing: Proline 500

⚠ CAUTION

Ambient temperature too high!

Danger of electronics overheating and housing deformation.
- ▶ Do not exceed the permitted maximum ambient temperature .
- ▶ If operating outdoors: Avoid direct sunlight and exposure to weathering, particularly in warm climatic regions.

⚠ CAUTION

Excessive force can damage the housing!
- ▶ Avoid excessive mechanical stress.

The transmitter can be mounted in the following ways:
- Post mounting
- Wall mounting

Wall mounting

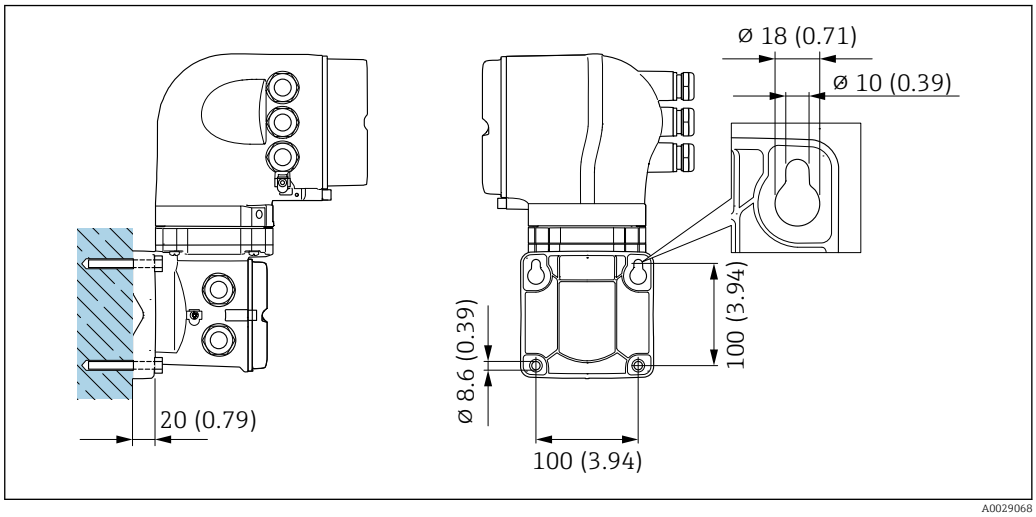

12 *Engineering unit mm (in)*

1. Drill the holes.
2. Insert wall plugs into the drilled holes.
3. Screw in the securing screws slightly at first.
4. Fit the transmitter housing over the securing screws and mount in place.
5. Tighten the securing screws.

Post mounting

⚠ WARNING

Order code for "Transmitter housing", option L "Cast, stainless": cast transmitters are very heavy.

They are unstable if they are not mounted on a secure, fixed post.

▶ Only mount the transmitter on a secure, fixed post on a stable surface.

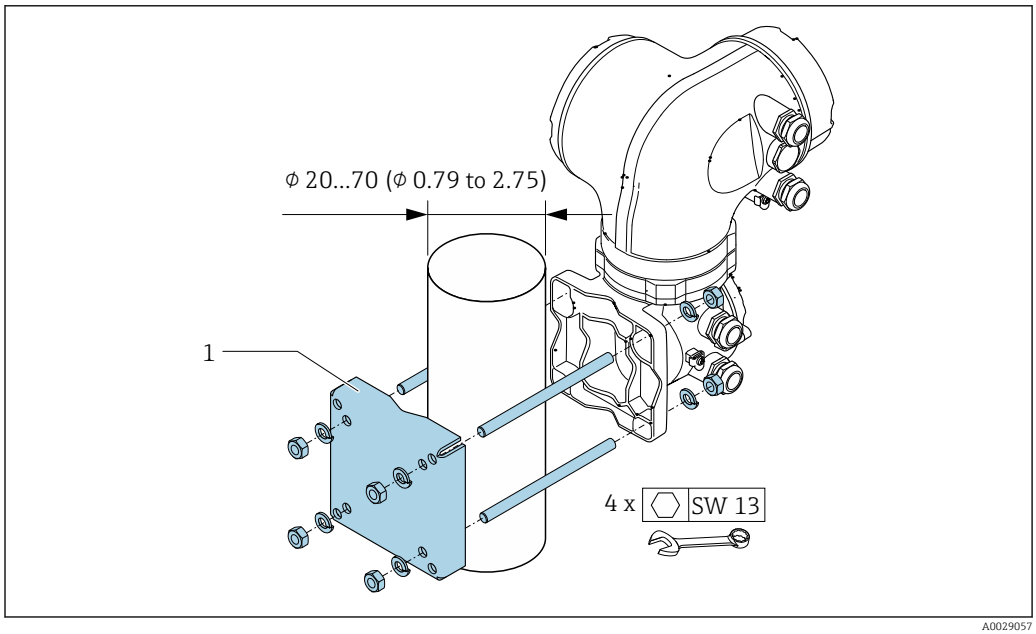

13 *Engineering unit mm (in)*

6.2.6 Turning the transmitter housing: Proline 500

To provide easier access to the connection compartment or display module, the transmitter housing can be turned.

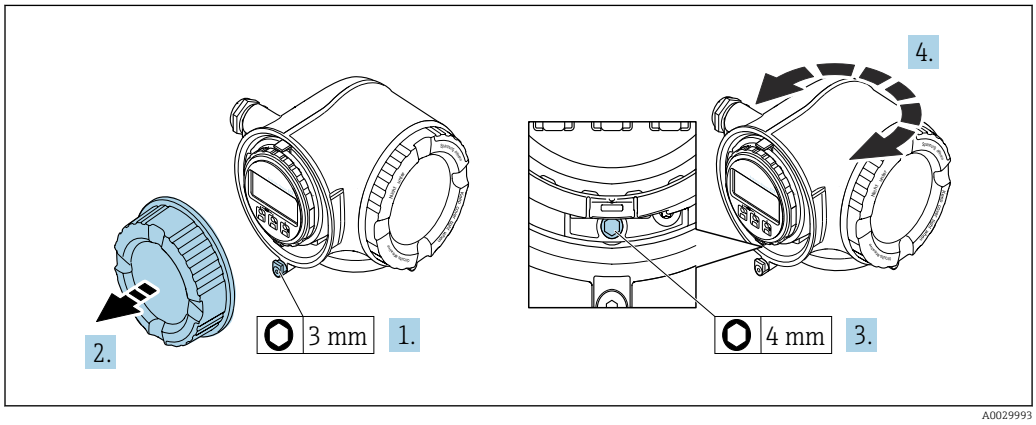

1. Depending on the device version: Loosen the securing clamp of the connection compartment cover.
2. Unscrew the connection compartment cover.
3. Release the fixing screw.
4. Turn the housing to the desired position.
5. Firmly tighten the securing screw.
6. Screw on the connection compartment cover.

7. Depending on the device version: Attach the securing clamp of the connection compartment cover.

6.2.7 Turning the display module: Proline 500

The display module can be turned to optimize display readability and operability.

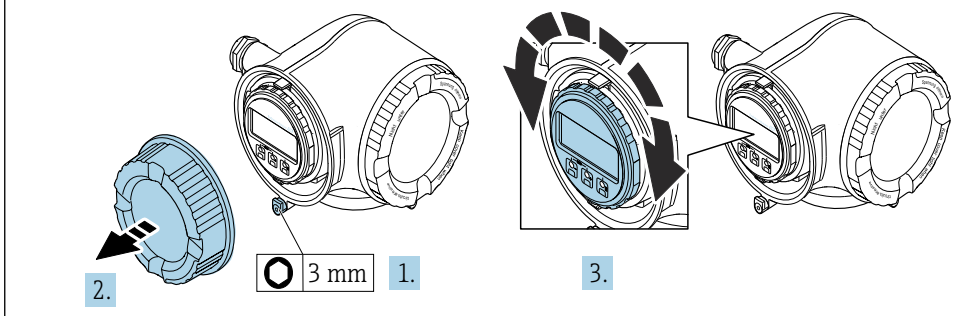

A0030035

1. Depending on the device version: Loosen the securing clamp of the connection compartment cover.
2. Unscrew the connection compartment cover.
3. Turn the display module to the desired position: max. 8 × 45° in each direction.
4. Screw on the connection compartment cover.
5. Depending on the device version: Attach the securing clamp of the connection compartment cover.

6.3 Post-installation check

Is the device undamaged (visual inspection)?	❑
Does the measuring device conform to the measuring point specifications? For example: ▪ Process temperature → 🗎 234 ▪ Process pressure (refer to the section on "Pressure-temperature ratings" in the "Technical Information" document) ▪ Ambient temperature ▪ Measuring range	❑
Has the correct orientation for the sensor been selected ? ▪ According to sensor type ▪ According to medium temperature ▪ According to medium properties (outgassing, with entrained solids)	❑
Does the arrow on the sensor nameplate match the direction of flow of the fluid through the piping → 🗎 23?	❑
Are the measuring point identification and labeling correct (visual inspection)?	❑
Is the device adequately protected from precipitation and direct sunlight?	❑
Are the securing screw and securing clamp tightened securely?	❑

7 Electrical connection

NOTICE

The measuring device does not have an internal circuit breaker.

- ▶ For this reason, assign the measuring device a switch or power-circuit breaker so that the power supply line can be easily disconnected from the mains.
- ▶ Although the measuring device is equipped with a fuse, additional overcurrent protection (maximum 10 A) should be integrated into the system installation.

7.1 Connection conditions

7.1.1 Required tools

- For cable entries: Use corresponding tools
- For securing clamp: Allen key 3 mm
- Wire stripper
- When using stranded cables: crimper for wire end ferrule
- For removing cables from terminal: Flat blade screwdriver ≤ 3 mm (0.12 in)

7.1.2 Requirements for connecting cable

The connecting cables provided by the customer must fulfill the following requirements.

Electrical safety

In accordance with applicable federal/national regulations.

Protective ground cable

Cable ≥2.08 mm^2 (14 AWG)

The grounding impedance must be less than 1 Ω.

Permitted temperature range

- The installation guidelines that apply in the country of installation must be observed.
- The cables must be suitable for the minimum and maximum temperatures to be expected.

Power supply cable

Standard installation cable is sufficient.

Signal cable

EtherNet/IP

The standard ANSI/TIA/EIA-568-B.2 Annex specifies CAT 5 as the minimum category for a cable used for EtherNet/IP. CAT 5e and CAT 6 are recommended.

For more information on planning and installing EtherNet/IP networks, please refer to the "Media Planning and Installation Manual. EtherNet/IP" of ODVA Organization

Current output 0/4 to 20 mA

Standard installation cable is sufficient.

Pulse/frequency/switch output

Standard installation cable is sufficient.

Relay output

Standard installation cable is sufficient.

Current input 0/4 to 20 mA

Standard installation cable is sufficient.

Status input

Standard installation cable is sufficient.

Cable diameter

- Cable glands supplied:
  M20 × 1.5 with cable ⌀ 6 to 12 mm (0.24 to 0.47 in)
- Spring-loaded terminals: Suitable for strands and strands with ferrules.
  Conductor cross-section 0.2 to 2.5 mm^2 (24 to 12 AWG).

Choice of connecting cable between the transmitter and sensor

Depends on the type of transmitter and the installation zones

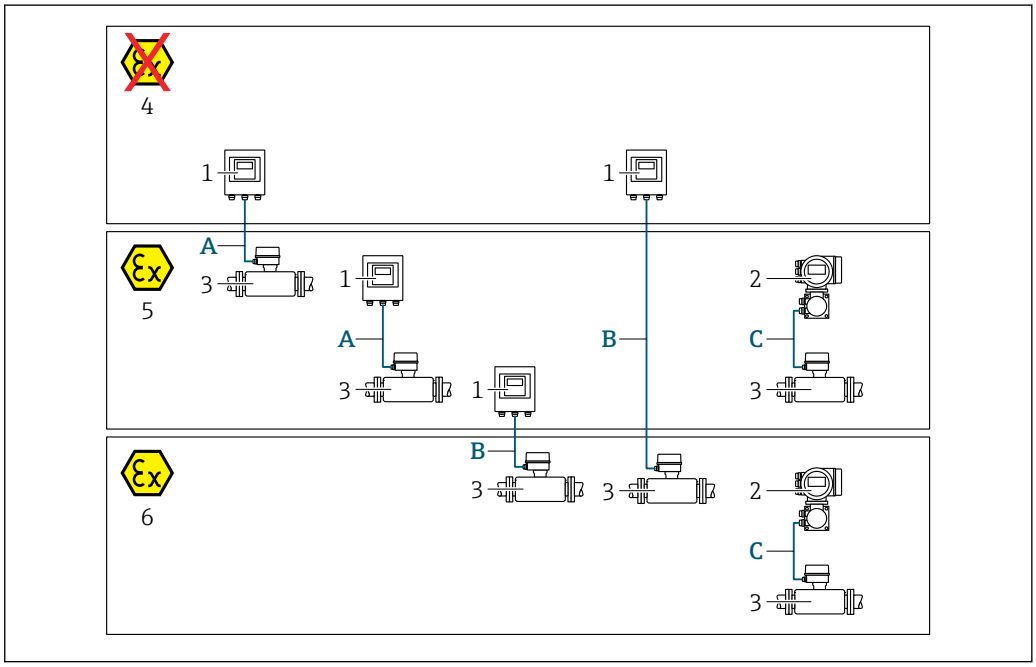

A0032476

1 *Proline 500 digital transmitter*
2 *Proline 500 transmitter*
3 *Sensor Promass*
4 *Non-hazardous area*
5 *Hazardous area: Zone 2; Class I, Division 2*
6 *Hazardous area: Zone 1; Class I, Division 1*
A *Standard cable to 500 digital transmitter → 📄 36*
Transmitter installed in the non-hazardous area or hazardous area: Zone 2; Class I, Division 2 / sensor installed in the hazardous area: Zone 2; Class I, Division 2
B *Standard cable to 500 digital transmitter → 📄 36*
Transmitter installed in the hazardous area: Zone 2; Class I, Division 2 / sensor installed in the hazardous area: Zone 1; Class I, Division 1
C *Signal cable to 500 transmitter → 📄 38*
Transmitter and sensor installed in the hazardous area: Zone 2; Class I, Division 2 oder Zone 1; Class I, Division 1

A: Connecting cable between sensor and transmitter: Proline 500 – digital

Standard cable

A standard cable with the following specifications can be used as the connecting cable.

Design	4 cores (2 pairs); uninsulated stranded CU wires; pair-stranded with common shield
Shielding	Tin-plated copper-braid, optical cover ≥ 85 %
Loop resistance	Power supply line (+, –): maximum 10 Ω
Cable length	Maximum 300 m (1 000 ft), see the following table.

Cross-section	Cable length [max.]
0.34 mm^2 (AWG 22)	80 m (270 ft)
0.50 mm^2 (AWG 20)	120 m (400 ft)
0.75 mm^2 (AWG 18)	180 m (600 ft)
1.00 mm^2 (AWG 17)	240 m (800 ft)
1.50 mm^2 (AWG 15)	300 m (1 000 ft)

Optionally available connecting cable

Design	2 × 2 × 0.34 mm^2 (AWG 22) PVC cable [1] with common shield (2 pairs, uninsulated stranded CU wires; pair-stranded)
Flame resistance	According to DIN EN 60332-1-2
Oil-resistance	According to DIN EN 60811-2-1
Shielding	Tin-plated copper-braid, optical cover ≥ 85 %
Operating temperature	When mounted in a fixed position: –50 to +105 °C (–58 to +221 °F); when cable can move freely: –25 to +105 °C (–13 to +221 °F)
Available cable length	Fixed: 20 m (65 ft); variable: up to maximum 50 m (165 ft)

1) UV radiation can impair the cable outer sheath. Protect the cable from direct sunshine where possible.

B: Connecting cable between sensor and transmitter: Proline 500 - digital

Standard cable

A standard cable with the following specifications can be used as the connecting cable.

Design	4, 6, 8 cores (2, 3, 4 pairs); uninsulated stranded CU wires; pair-stranded with common shield
Shielding	Tin-plated copper-braid, optical cover ≥ 85 %
Capacitance C	Maximum 760 nF IIC, maximum 4.2 µF IIB
Inductance L	Maximum 26 µH IIC, maximum 104 µH IIB
Inductance/resistance ratio (L/R)	Maximum 8.9 µH/Ω IIC, maximum 35.6 µH/Ω IIB (e.g. in accordance with IEC 60079-25)
Loop resistance	Power supply line (+, –): maximum 5 Ω
Cable length	Maximum 150 m (500 ft), see the following table.

Cross-section	Cable length [max.]	Termination
2 x 2 x 0.50 mm² (AWG 20)	50 m (165 ft)	2 x 2 x 0.50 mm² (AWG 20) 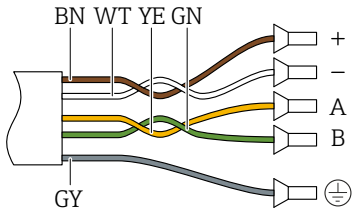 ▪ +, – = 0.5 mm² ▪ A, B = 0.5 mm²
3 x 2 x 0.50 mm² (AWG 20)	100 m (330 ft)	3 x 2 x 0.50 mm² (AWG 20) 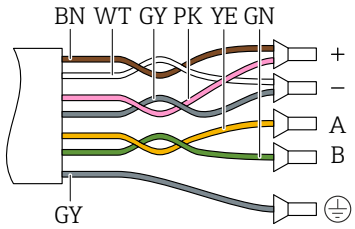 ▪ +, – = 1.0 mm² ▪ A, B = 0.5 mm²
4 x 2 x 0.50 mm² (AWG 20)	150 m (500 ft)	4 x 2 x 0.50 mm² (AWG 20) 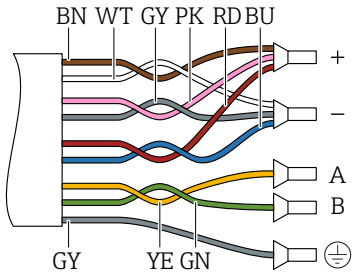 ▪ +, – = 1.5 mm² ▪ A, B = 0.5 mm²

Optionally available connecting cable

Connecting cable for	Zone 1; Class I, Division 1
Standard cable	2 × 2 × 0.5 mm² (AWG 20) PVC cable [1] with common shield (2 pairs, pair-stranded)
Flame resistance	According to DIN EN 60332-1-2
Oil-resistance	According to DIN EN 60811-2-1
Shielding	Tin-plated copper-braid, optical cover ≥ 85 %
Operating temperature	When mounted in a fixed position: −50 to +105 °C (−58 to +221 °F); when cable can move freely: −25 to +105 °C (−13 to +221 °F)
Available cable length	Fixed: 20 m (65 ft); variable: up to maximum 50 m (165 ft)

1) UV radiation can impair the cable outer sheath. Protect the cable from direct sunshine where possible.

C: Connecting cable between sensor and transmitter: Proline 500

Standard cable	7 × 0.38 mm² PVC cable [1] with common shield and individually shielded cores
Conductor resistance	≤50 Ω/km (0.015 Ω/ft)
Capacitance: core/shield	≤420 pF/m (128 pF/ft)
Cable length (max.)	20 m (65 ft)
Cable lengths (available for order)	5 m (15 ft), 10 m (32 ft), 20 m (65 ft)
Operating temperature	Depends on the device version and how the cable is installed: ▪ Standard version: ▪ Cable - fixed installation: −40 to +105 °C (−40 to +221 °F) ▪ Cable - movable: −25 to +105 °C (−13 to +221 °F) ▪ Order code for "Test, certificate", option **JP**: ▪ Cable - fixed installation: −50 to +105 °C (−58 to +221 °F) ▪ Cable - movable: −25 to +105 °C (−13 to +221 °F) ▪ Order code for "Test, certificate", option **JQ**: ▪ Cable - fixed installation: −60 to +105 °C (−76 to +221 °F) ▪ Cable - movable: −25 to +105 °C (−13 to +221 °F)

1) UV radiation can impair the cable outer sheath. Protect the cable from direct sunshine where possible.

7.1.3 Terminal assignment

Transmitter: supply voltage, input/outputs

The terminal assignment of the inputs and outputs depends on the individual order version of the device. The device-specific terminal assignment is documented on an adhesive label in the terminal cover.

Supply voltage		Input/output 1	Input/output 2		Input/output 3		Input/output 4	
1 (+)	2 (−)	EtherNet/IP (RJ45 connector)	24 (+)	25 (−)	22 (+)	23 (−)	20 (+)	21 (−)
			Device-specific terminal assignment: adhesive label in terminal cover.					

Transmitter and sensor connection housing: connecting cable

The sensor and transmitter, which are mounted in separate locations, are interconnected by a connecting cable. The cable is connected via the sensor connection housing and the transmitter housing.

Terminal assignment and connection of the connecting cable:
- Proline 500 – digital→ 📄 40
- Proline 500 → 📄 50

7.1.4 Device plugs available

Device plugs may not be used in hazardous areas!

Order code for "Input; output 1", option NA "EtherNet/IP"

Order code for "Electrical connection"	Cable entry/connection	
	2	3
L, N, P, U	Connector M12 × 1	–
R [1) 2)], S [1) 2)], T [1) 2)], V [1) 2)]	Connector M12 × 1	Connector M12 × 1

1) Cannot be combined with an external WLAN antenna (order code for "Enclosed accessories", option P8) of an RJ45 M12 adapter for the service interface (order code for "Accessories mounted", option NB) or of the remote display and operating module DKX001
2) Suitable for integrating the device in a ring topology.

7.1.5 Pin assignment of device plug

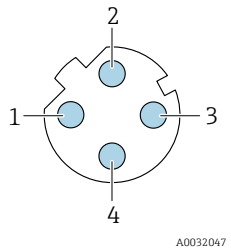

Pin		Assignment
1	+	Tx
2	+	Rx
3	-	Tx
4	-	Rx
Coding		**Plug/socket**
D		Socket

7.1.6 Preparing the measuring device

Carry out the steps in the following order:

1. Mount the sensor and transmitter.
2. Connection housing, sensor: Connect connecting cable.
3. Transmitter: Connect connecting cable.
4. Transmitter: Connect signal cable and cable for supply voltage.

NOTICE

Insufficient sealing of the housing!
Operational reliability of the measuring device could be compromised.
▶ Use suitable cable glands corresponding to the degree of protection.

1. Remove dummy plug if present.
2. If the measuring device is supplied without cable glands:
   Provide suitable cable gland for corresponding connecting cable.
3. If the measuring device is supplied with cable glands:
   Observe requirements for connecting cables → 📖 34.

7.2 Connecting the measuring device: Proline 500 - digital

NOTICE

Limitation of electrical safety due to incorrect connection!

- Have electrical connection work carried out by appropriately trained specialists only.
- Observe applicable federal/national installation codes and regulations.
- Comply with local workplace safety regulations.
- Always connect the protective ground cable ⏚ before connecting additional cables.
- For use in potentially explosive atmospheres, observe the information in the device-specific Ex documentation.

7.2.1 Connecting the connecting cable

WARNING

Risk of damaging the electronic components!

- Connect the sensor and transmitter to the same potential equalization.
- Only connect the sensor to a transmitter with the same serial number.
- Ground the connection housing of the sensor via the external screw terminal.

Connecting cable terminal assignment

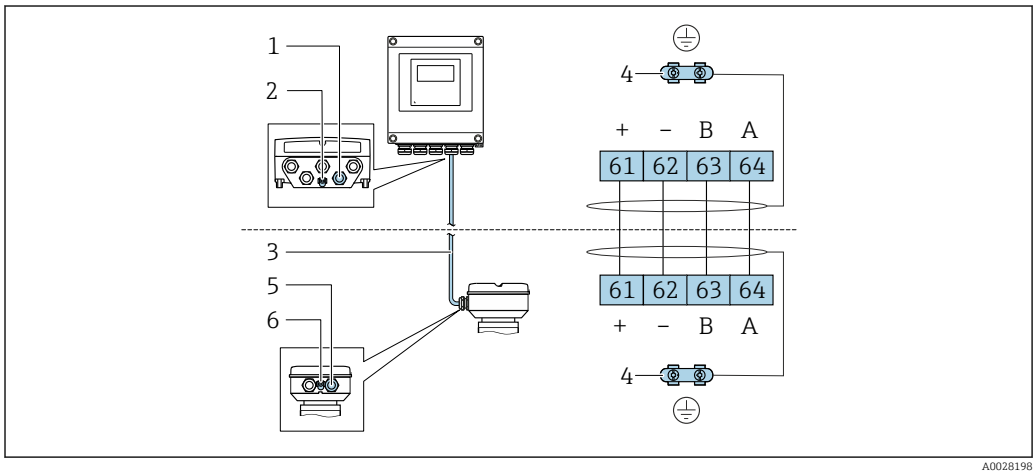

1 *Cable entry for cable on transmitter housing*
2 *Protective earth (PE)*
3 *Connecting cable ISEM communication*
4 *Grounding via ground connection; on device plug versions grounding is through the plug itself*
5 *Cable entry for cable or connection of device plug on sensor connection housing*
6 *Protective earth (PE)*

Connecting the connecting cable to the sensor connection housing

- Connection via terminals with order code for "Sensor connection housing":
  - Option **A** "Aluminum, coated"→ 📖 41
  - Option **B** "Stainless" → 📖 42
  - Option **L** "Cast, stainless"→ 📖 41
- Connection via connectors with order code for "Sensor connection housing": Option **C** "Ultra-compact hygienic, stainless"→ 📖 43

Connecting the connecting cable to the transmitter

The cable is connected to the transmitter via terminals → 📖 44.

Connecting the sensor connection housing via terminals

For the device version with the order code for "Sensor connection housing":
- Option **A** "Aluminum coated"
- Option **L** "Cast, stainless"

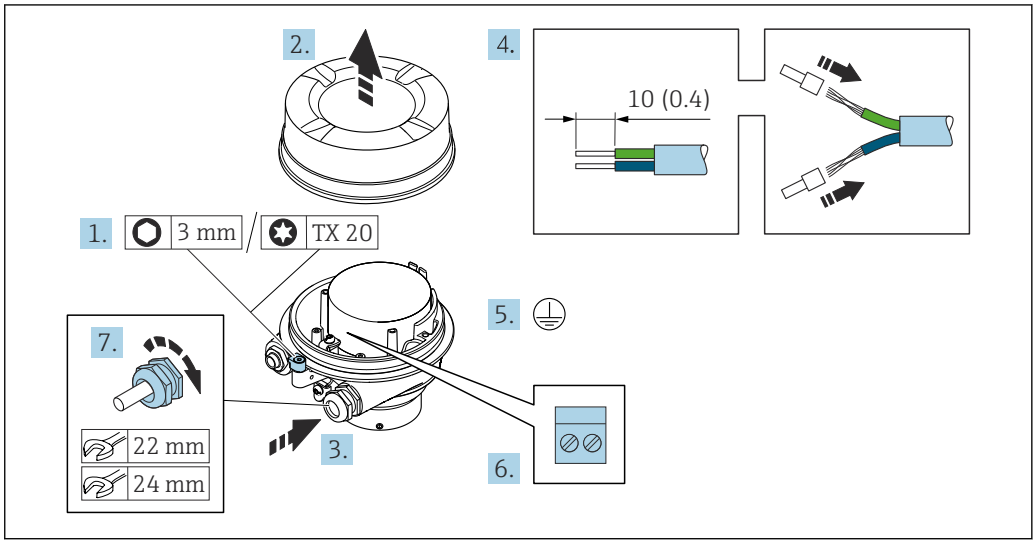

A0029616

1. Loosen the securing clamp of the housing cover.
2. Unscrew the housing cover.
3. Push the cable through the cable entry. To ensure tight sealing, do not remove the sealing ring from the cable entry.
4. Strip the cable and cable ends. In the case of stranded cables, fit ferrules.
5. Connect the protective ground.
6. Connect the cable in accordance with the connecting cable terminal assignment.
7. Firmly tighten the cable glands.
   ↳ This concludes the process for connecting the connecting cable.

⚠ WARNING

Housing degree of protection voided due to insufficient sealing of the housing.

▶ Screw in the thread on the cover without using any lubricant. The thread on the cover is coated with a dry lubricant.

8. Screw on the housing cover.
9. Tighten the securing clamp of the housing cover.

Connecting the sensor connection housing via terminals

For the device version with the order code for "Sensor connection housing":
Option **B** "Stainless"

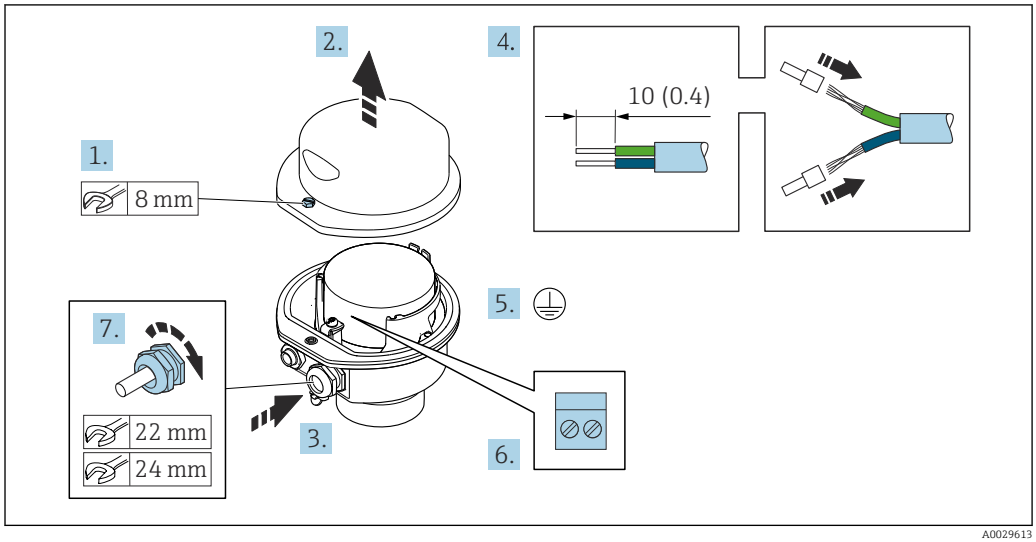

1. Release the securing screw of the housing cover.
2. Open the housing cover.
3. Push the cable through the cable entry . To ensure tight sealing, do not remove the sealing ring from the cable entry.
4. Strip the cable and cable ends. In the case of stranded cables, fit ferrules.
5. Connect the protective ground.
6. Connect the cable in accordance with the connecting cable terminal assignment.
7. Firmly tighten the cable glands.
   ↳ This concludes the process for connecting the connecting cable.
8. Close the housing cover.
9. Tighten the securing screw of the housing cover.

Connecting the sensor connection housing via the connector

For the device version with the order code for "Sensor connection housing":
Option **C** "Ultra-compact hygienic, stainless"

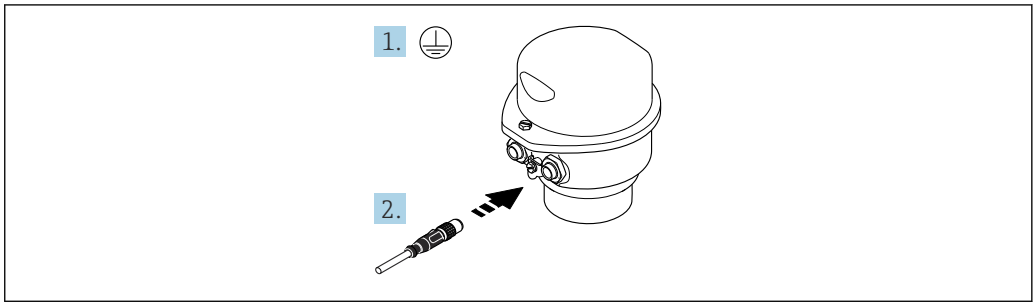

A0029615

1. Connect the protective ground.
2. Connect the connector.

Connecting the connecting cable to the transmitter

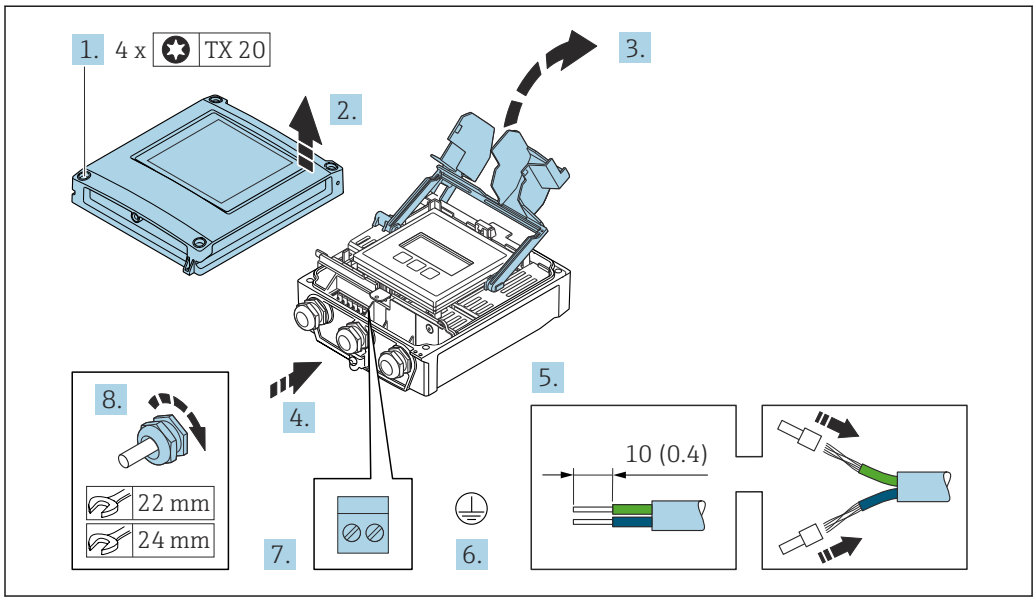

1. Loosen the 4 fixing screws on the housing cover.
2. Open the housing cover.
3. Fold open the terminal cover.
4. Push the cable through the cable entry. To ensure tight sealing, do not remove the sealing ring from the cable entry.
5. Strip the cable and cable ends. In the case of stranded cables, fit ferrules.
6. Connect the protective ground.
7. Connect the cable in accordance with the connecting cable terminal assignment → 📖 40.
8. Firmly tighten the cable glands.
   ↳ This concludes the process for connecting the connecting cable.
9. Close the housing cover.
10. Tighten the securing screw of the housing cover.
11. After connecting the connecting cable:
    Connect the signal cable and the supply voltage cable → 📖 45.

7.2.2 Connecting the transmitter

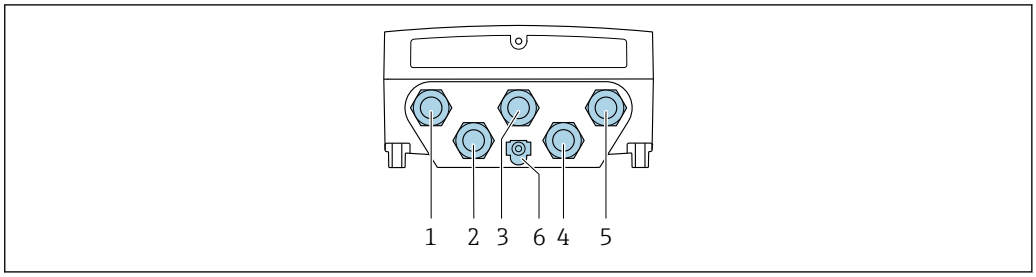

A0028200

1 *Terminal connection for supply voltage*
2 *Terminal connection for signal transmission, input/output*
3 *Terminal connection for signal transmission, input/output*
4 *Terminal connection for connecting cable between sensor and transmitter*
5 *Terminal connection for signal transmission, input/output or terminal connection for network connection (DHCP client) via service interface (CDI-RJ45); optional: connection for external WLAN antenna*
6 *Protective earth (PE)*

In addition to connecting the device via EtherNet/IP and the available inputs/outputs, additional connection options are also available:
- Integrate into a network via the service interface (CDI-RJ45) → 48.
- Integrate the device into a ring topology → 49.

Connecting the EtherNet/IP connector

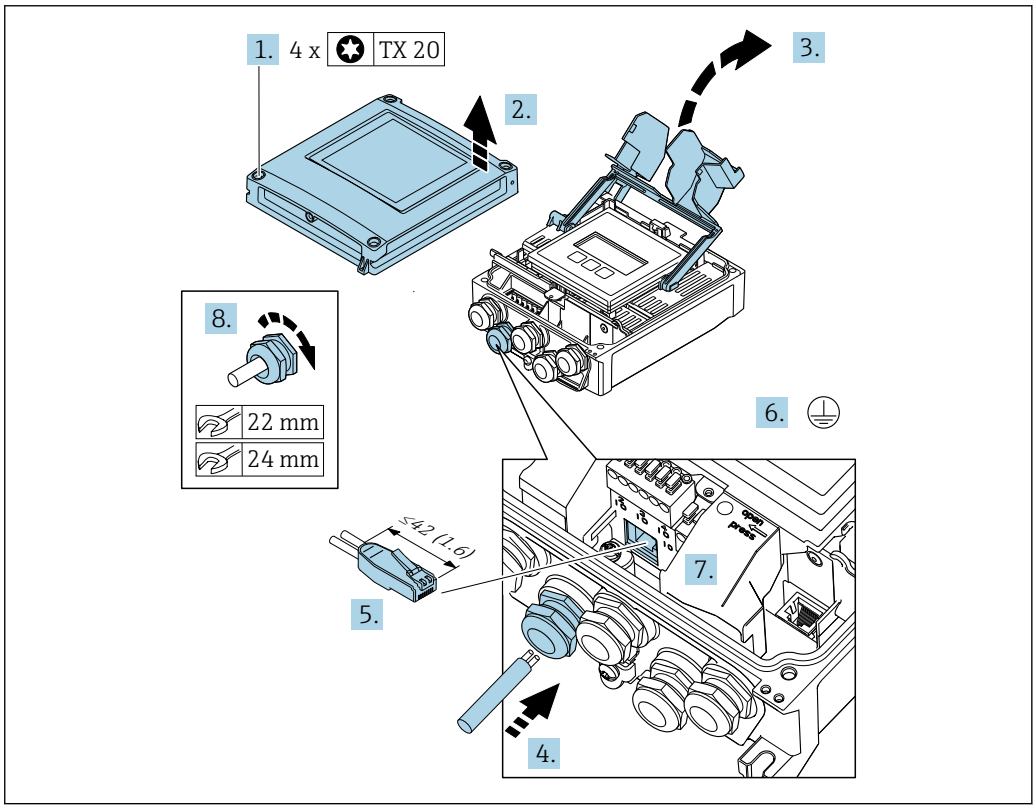

A0033987

1. Loosen the 4 fixing screws on the housing cover.
2. Open the housing cover.
3. Fold open the terminal cover.
4. Push the cable through the cable entry. To ensure tight sealing, do not remove the sealing ring from the cable entry.
5. Strip the cable and cable ends and connect to the RJ45 connector.

6. Connect the protective ground.
7. Plug in the RJ45 connector.
8. Firmly tighten the cable glands.
   ↳ This concludes the EtherNet/IP connection process.

Connecting the supply voltage and additional inputs/outputs

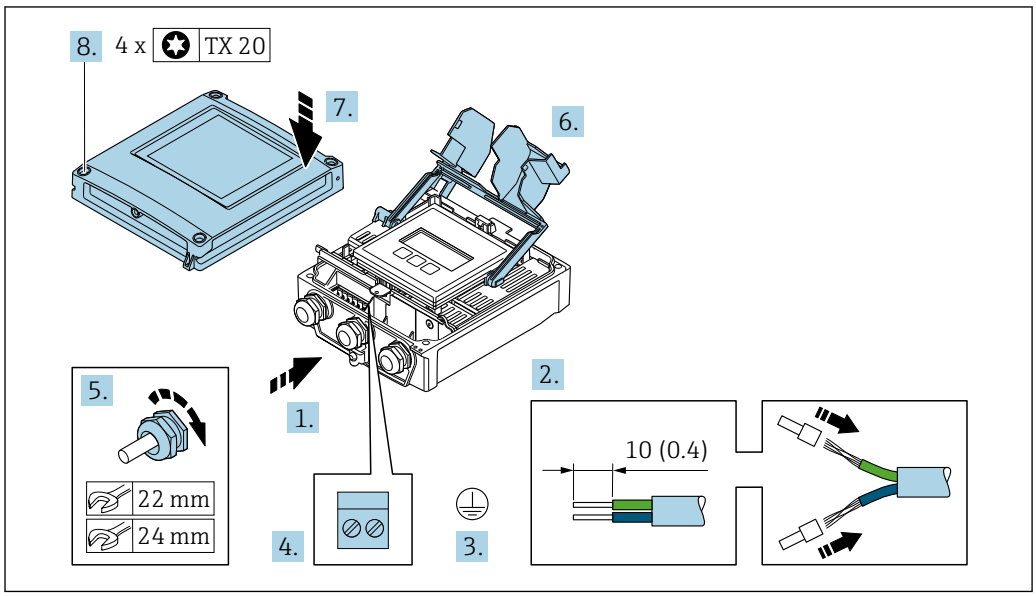

1. Push the cable through the cable entry. To ensure tight sealing, do not remove the sealing ring from the cable entry.
2. Strip the cable and cable ends. In the case of stranded cables, fit ferrules.
3. Connect the protective ground.
4. Connect the cable in accordance with the terminal assignment .
   ↳ **Signal cable terminal assignment:** The device-specific terminal assignment is documented on an adhesive label in the terminal cover.
   Supply voltage terminal assignment: Adhesive label in the terminal cover or → 📄 38.
5. Firmly tighten the cable glands.
   ↳ This concludes the cable connection process.
6. Close the terminal cover.
7. Close the housing cover.

⚠ WARNING

Housing degree of protection may be voided due to insufficient sealing of the housing.

▶ Screw in the screw without using any lubricant.

⚠ WARNING

Excessive tightening torque applied to the fixing screws!

Risk of damaging the plastic transmitter.

▶ Tighten the fixing screws as per the tightening torque: 2 Nm (1.5 lbf ft)

8. Tighten the 4 fixing screws on the housing cover.

Removing a cable

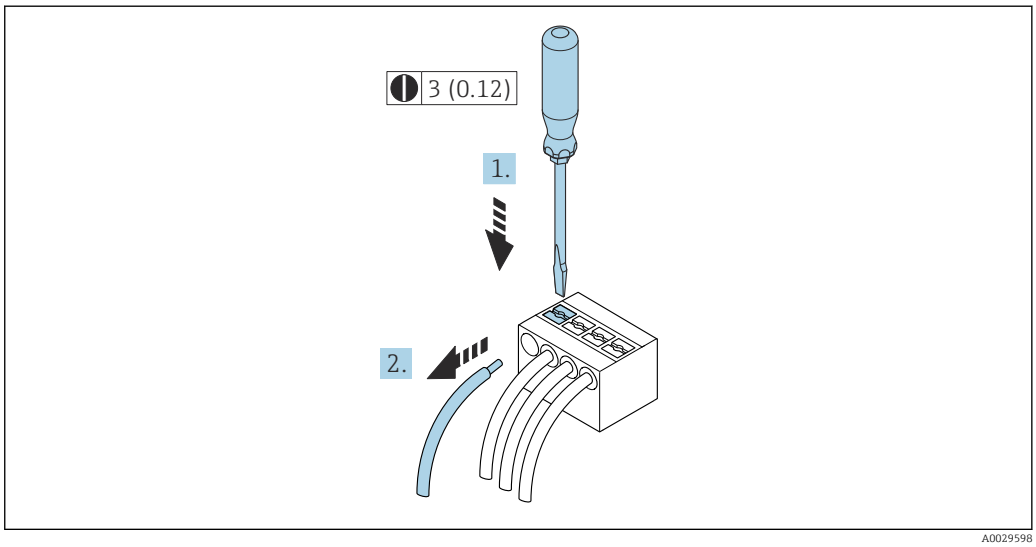

14 Engineering unit mm (in)

1. To remove a cable from the terminal, use a flat-blade screwdriver to push the slot between the two terminal holes
2. while simultaneously pulling the cable end out of the terminal.

7.2.3 Integrating the transmitter into a network

This section only presents the basic options for integrating the device into a network.

For information on the procedure to follow to connect the transmitter correctly → 📄 40.

Integrating via the service interface

The device is integrated via the connection to the service interface (CDI-RJ45).

Note the following when connecting:
- Recommended cable: CAT5e, CAT6 or CAT7, with shielded connector (e.g. brand: YAMAICHI ; Part No Y-ConProfixPlug63 / Prod. ID: 82-006660)
- Maximum cable thickness: 6 mm
- Length of connector including bend protection: 42 mm
- Bending radius: 5 x cable thickness

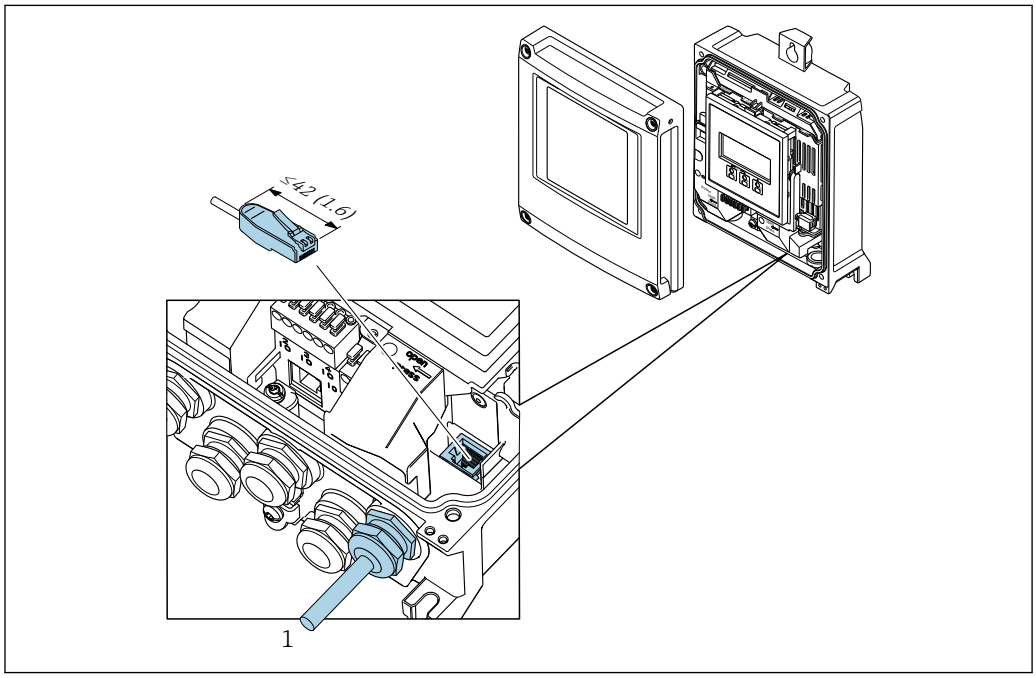

1 Service interface (CDI-RJ45)

An adapter for RJ45 and the M12 connector is optionally available:
Order code for "Accessories", option **NB**: "Adapter RJ45 M12 (service interface)"

The adapter connects the service interface (CDI-RJ45) to an M12 connector mounted in the cable entry. Therefore the connection to the service interface can be established via an M12 connector without opening the device.

Integrating into a ring topology

The device is integrated via the terminal connection for signal transmission (output 1) and the connection to the service interface (CDI-RJ45).

Note the following when connecting:
- Recommended cable: CAT5e, CAT6 or CAT7, with shielded connector (e.g. brand: YAMAICHI ; Part No Y-ConProfixPlug63 / Prod. ID: 82-006660)
- Maximum cable thickness: 6 mm
- Length of connector including bend protection: 42 mm
- Bending radius: 2.5 x cable thickness

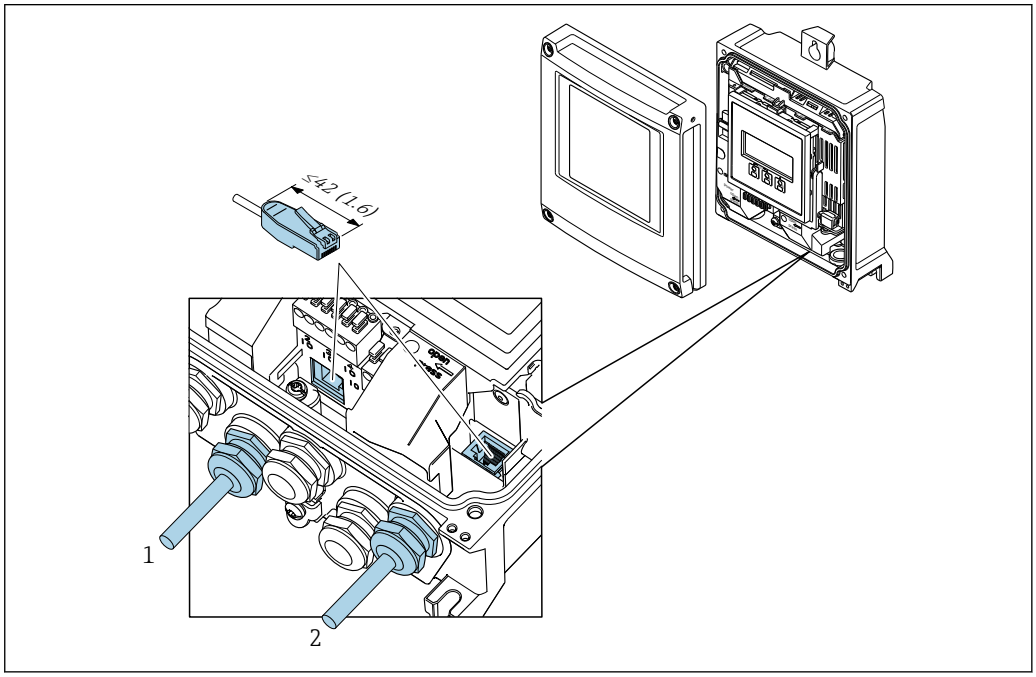

A0033830

1 EtherNet/IP connection
2 Service interface (CDI-RJ45)

An adapter for RJ45 and the M12 connector is optionally available:
Order code for "Accessories", option **NB**: "Adapter RJ45 M12 (service interface)"

The adapter connects the service interface (CDI-RJ45) to an M12 connector mounted in the cable entry. Therefore the connection to the service interface can be established via an M12 connector without opening the device.

7.3 Connecting the measuring device: Proline 500

NOTICE

Limitation of electrical safety due to incorrect connection!

- Have electrical connection work carried out by appropriately trained specialists only.
- Observe applicable federal/national installation codes and regulations.
- Comply with local workplace safety regulations.
- Always connect the protective ground cable ⏚ before connecting additional cables.
- For use in potentially explosive atmospheres, observe the information in the device-specific Ex documentation.

7.3.1 Connecting the connecting cable

⚠ WARNING

Risk of damaging the electronic components!

- Connect the sensor and transmitter to the same potential equalization.
- Only connect the sensor to a transmitter with the same serial number.
- Ground the connection housing of the sensor via the external screw terminal.

Connecting cable terminal assignment

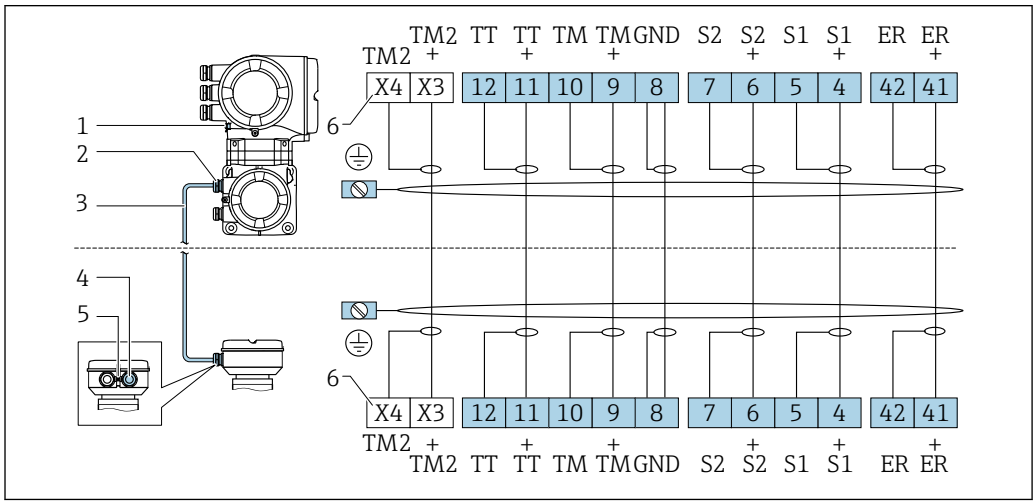

1 *Protective earth (PE)*
2 *Cable entry for connecting cable on transmitter connection housing*
3 *Connecting cable*
4 *Cable entry for connecting cable on sensor connection housing*
5 *Protective earth (PE)*
X *Terminals X3, X4: temperature sensor*

Connecting the connecting cable to the sensor connection housing

Connection via terminals with order code for "Housing":

- Option **B** "Stainless"→ 📄 52
- Option **L** "Cast, stainless"→ 📄 51

Connecting the connecting cable to the transmitter

The cable is connected to the transmitter via terminals → 📄 53.

Connecting the sensor connection housing via terminals

For the device version with the order code for "Housing":
Option **L** "Cast, stainless"

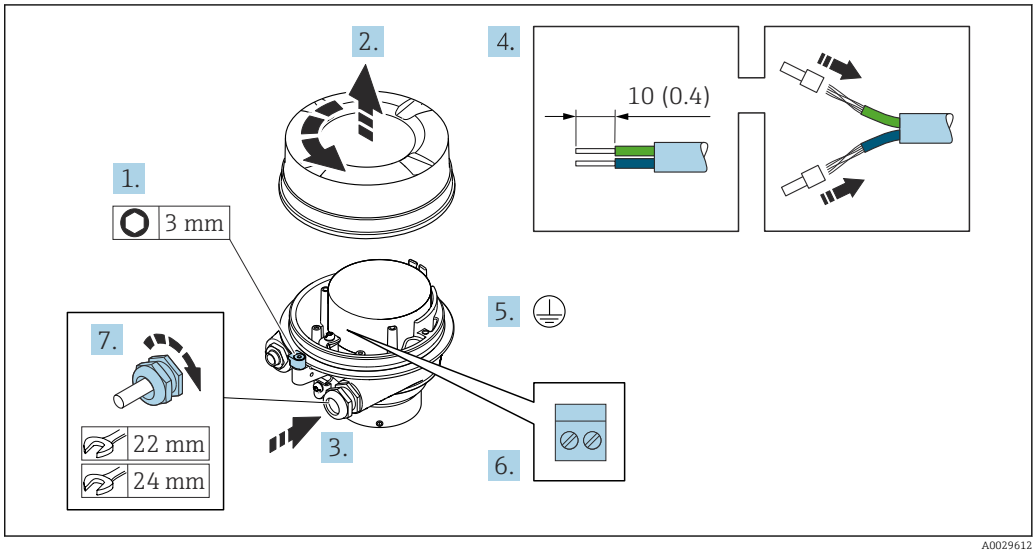

1. Loosen the securing clamp of the housing cover.
2. Unscrew the housing cover.
3. Push the cable through the cable entry . To ensure tight sealing, do not remove the sealing ring from the cable entry.
4. Strip the cable and cable ends. In the case of stranded cables, fit ferrules.
5. Connect the protective ground.
6. Connect the cable in accordance with the connecting cable terminal assignment.
7. Firmly tighten the cable glands.
   ↳ This concludes the process for connecting the connecting cable.

⚠ WARNING

Housing degree of protection voided due to insufficient sealing of the housing.

- Screw in the thread on the cover without using any lubricant. The thread on the cover is coated with a dry lubricant.

8. Screw on the housing cover.
9. Tighten the securing clamp of the housing cover.

Connecting the sensor connection housing via terminals

For the device version with the order code for "Housing":
Option **B** "Stainless"

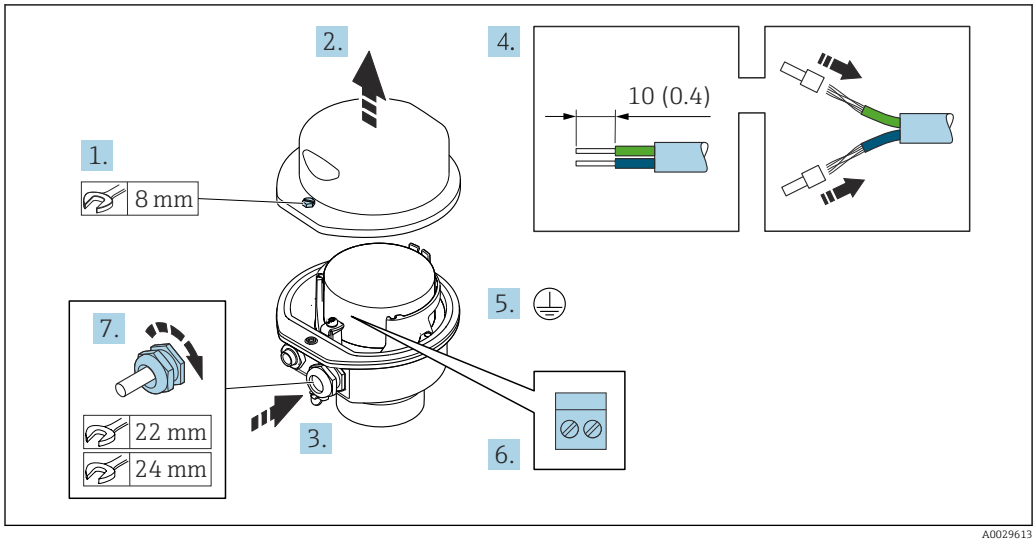

1. Release the securing screw of the housing cover.
2. Open the housing cover.
3. Push the cable through the cable entry . To ensure tight sealing, do not remove the sealing ring from the cable entry.
4. Strip the cable and cable ends. In the case of stranded cables, fit ferrules.
5. Connect the protective ground.
6. Connect the cable in accordance with the connecting cable terminal assignment.
7. Firmly tighten the cable glands.
   ↳ This concludes the process for connecting the connecting cable.
8. Close the housing cover.
9. Tighten the securing screw of the housing cover.

Connecting the connecting cable to the transmitter

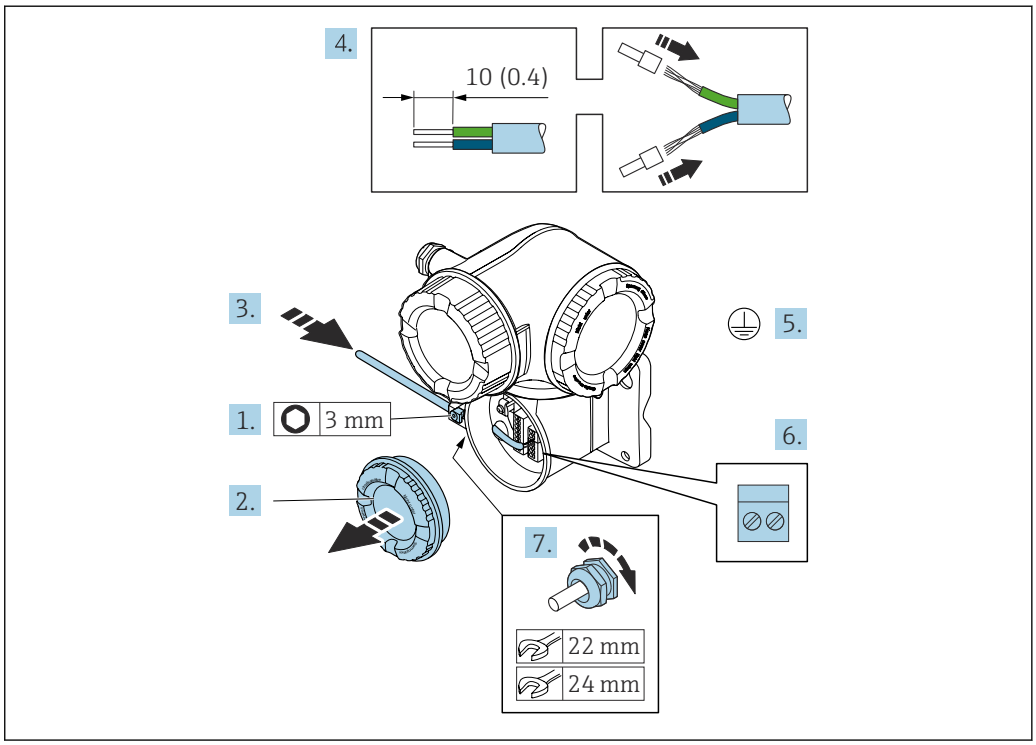

A0029592

1. Loosen the securing clamp of the connection compartment cover.
2. Unscrew the connection compartment cover.
3. Push the cable through the cable entry . To ensure tight sealing, do not remove the sealing ring from the cable entry.
4. Strip the cable and cable ends. In the case of stranded cables, also fit ferrules.
5. Connect the protective ground.
6. Connect the cable in accordance with the connecting cable terminal assignment → 📖 50.
7. Firmly tighten the cable glands.
   ↳ This concludes the process for connecting the connecting cable.
8. Screw on the connection compartment cover.
9. Tighten the securing clamp of the connection compartment cover.
10. After connecting the connecting cable: After connecting the connecting cables: Connect the signal cable and the supply voltage cable .

7.3.2 Connecting the transmitter

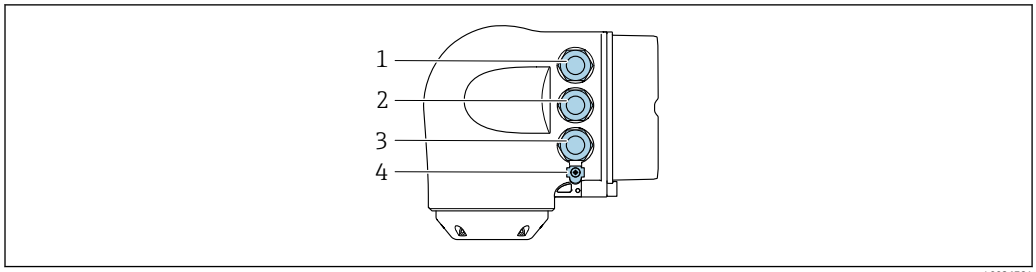

A0026781

1 *Terminal connection for supply voltage*
2 *Terminal connection for signal transmission, input/output*
3 *Terminal connection for signal transmission, input/output or terminal connection for network connection via service interface (CDI-RJ45)*
4 *Protective earth (PE)*

In addition to connecting the device via EtherNet/IP and the available inputs/outputs, additional connection options are also available:
- Integrate into a network via the service interface (CDI-RJ45) → 📄 57.
- Integrate the device into a ring topology → 📄 58.

Connecting the EtherNet/IP connector

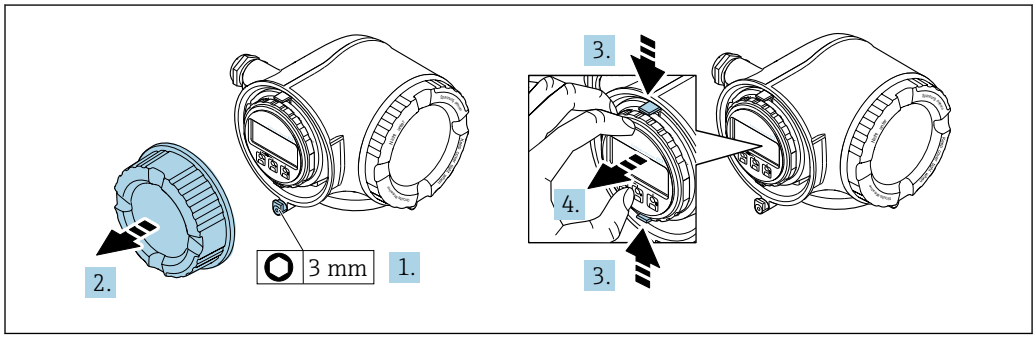

A0029813

1. Loosen the securing clamp of the connection compartment cover.
2. Unscrew the connection compartment cover.
3. Squeeze the tabs of the display module holder together.
4. Remove the display module holder.

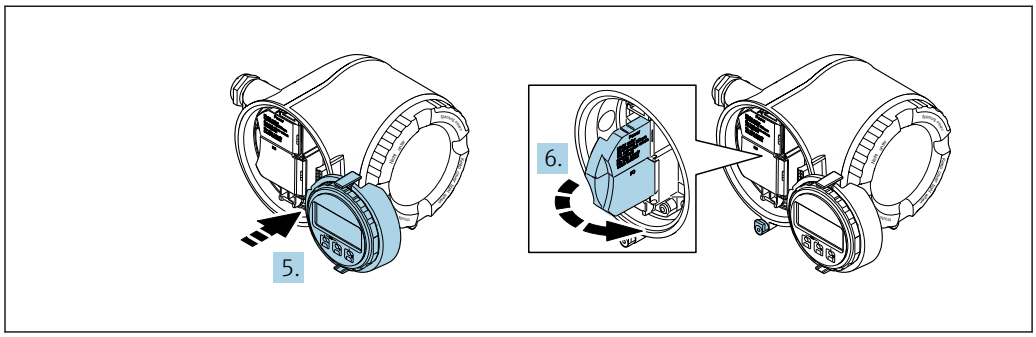

A0029814

5. Attach the holder to the edge of the electronics compartment.
6. Open the terminal cover.

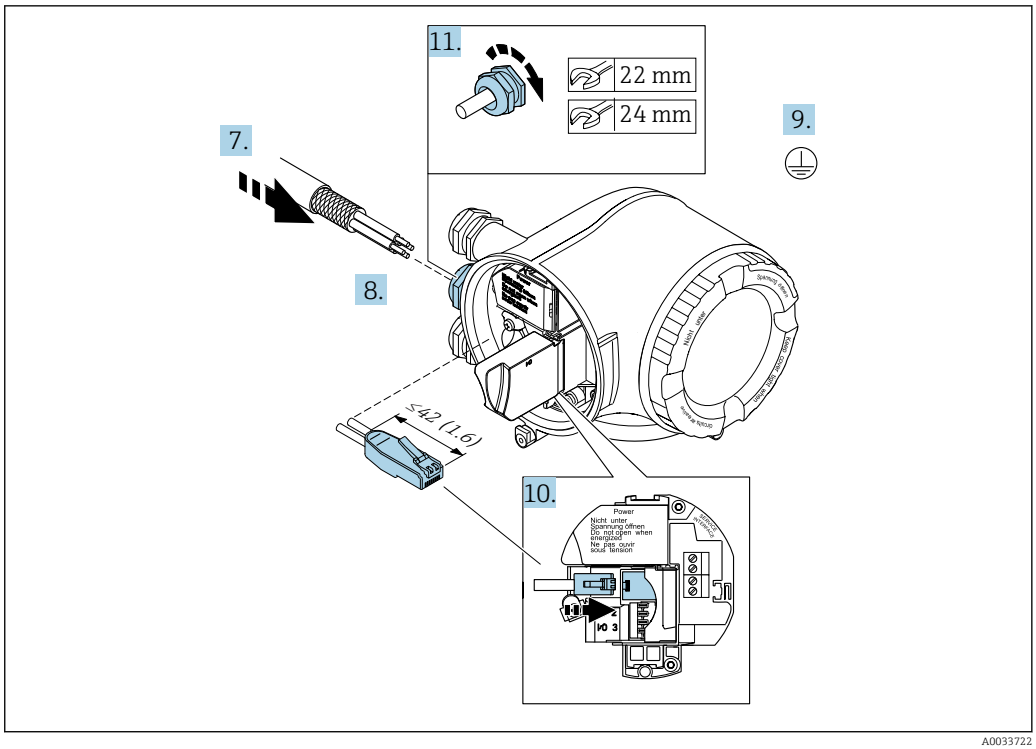

A0033722

7. Push the cable through the cable entry . To ensure tight sealing, do not remove the sealing ring from the cable entry.
8. Strip the cable and cable ends and connect to the RJ45 connector.
9. Connect the protective ground.
10. Plug in the RJ45 connector.
11. Firmly tighten the cable glands.
    ↳ This concludes the EtherNet/IP connection process.

Connecting the supply voltage and additional inputs/outputs

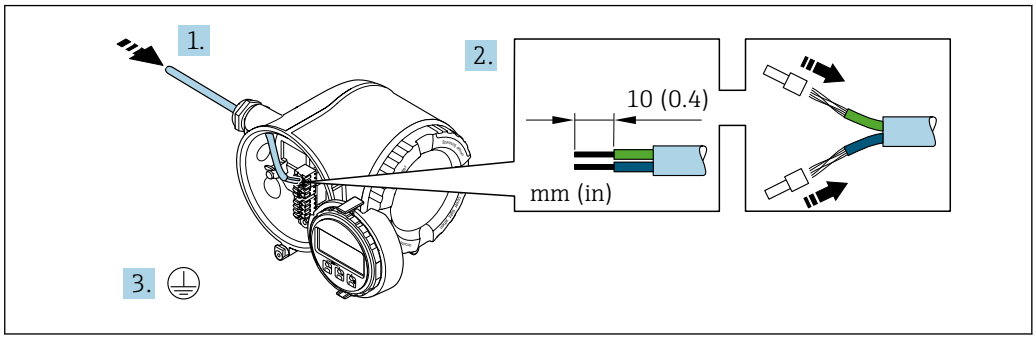

A0033983

1. Push the cable through the cable entry . To ensure tight sealing, do not remove the sealing ring from the cable entry.
2. Strip the cable and cable ends. In the case of stranded cables, also fit ferrules.
3. Connect the protective ground.

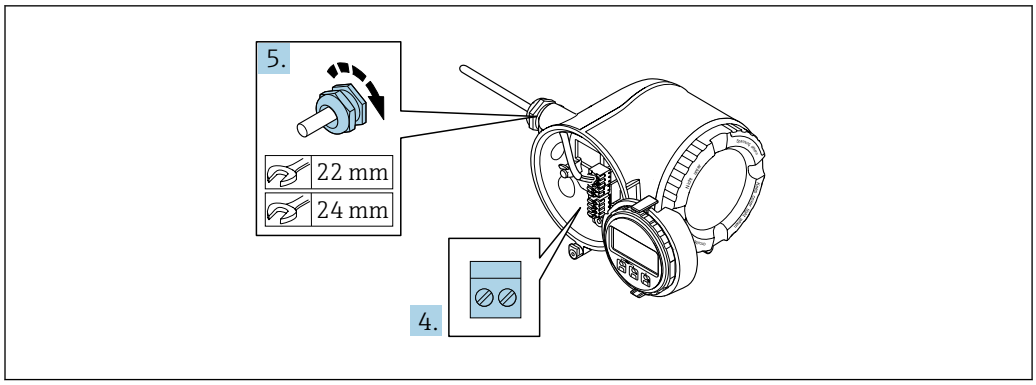

A0033984

4. Connect the cable in accordance with the terminal assignment .
   ↳ **Signal cable terminal assignment:** The device-specific terminal assignment is documented on an adhesive label in the terminal cover.
   Supply voltage terminal assignment: Adhesive label in the terminal cover or → 38.
5. Firmly tighten the cable glands.
   ↳ This concludes the cable connection process.
6. Close the terminal cover.
7. Fit the display module holder in the electronics compartment.
8. Screw on the connection compartment cover.
9. Secure the securing clamp of the connection compartment cover.

Removing a cable

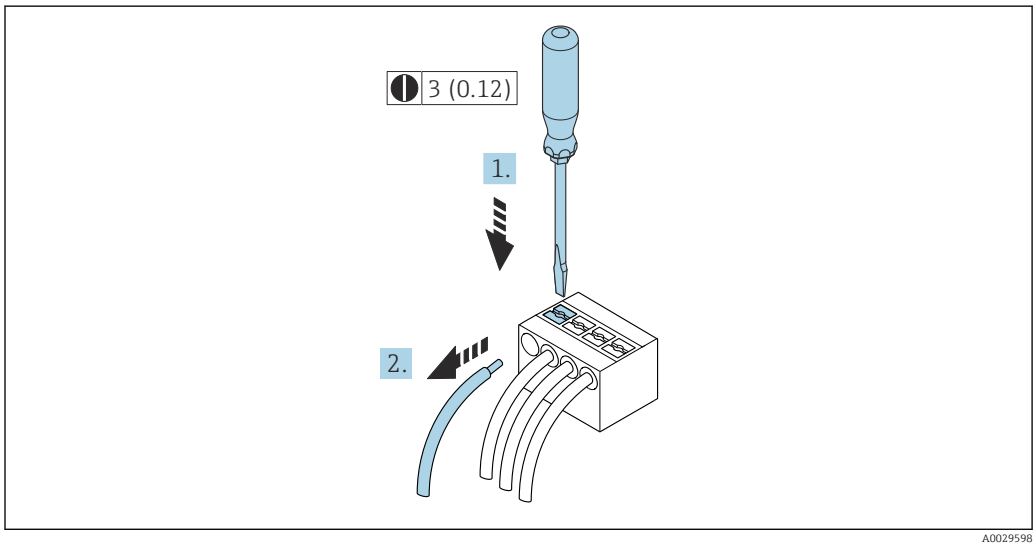

A0029598

15 *Engineering unit mm (in)*

1. To remove a cable from the terminal, use a flat-blade screwdriver to push the slot between the two terminal holes
2. while simultaneously pulling the cable end out of the terminal.

7.3.3 Integrating the transmitter into a network

This section only presents the basic options for integrating the device into a network.

For information on the procedure to follow to connect the transmitter correctly → 📄 50.

Integrating via the service interface

The device is integrated via the connection to the service interface (CDI-RJ45).

Note the following when connecting:
- Recommended cable: CAT 5e, CAT 6 or CAT 7, with shielded connector (e.g. brand: YAMAICHI ; Part No Y-ConProfixPlug63 / Prod. ID: 82-006660)
- Maximum cable thickness: 6 mm
- Length of connector including bend protection: 42 mm
- Bending radius: 5 x cable thickness

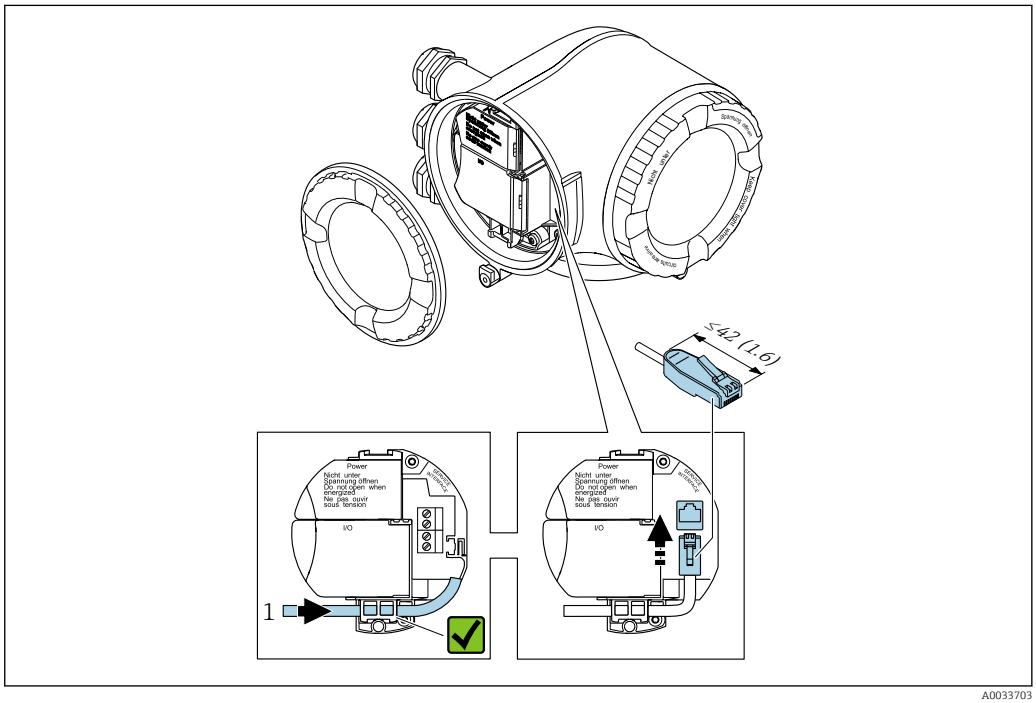

1 Service interface (CDI-RJ45)

An adapter for RJ45 and the M12 connector is optionally available:
Order code for "Accessories", option **NB**: "Adapter RJ45 M12 (service interface)"

The adapter connects the service interface (CDI-RJ45) to an M12 connector mounted in the cable entry. Therefore the connection to the service interface can be established via an M12 connector without opening the device.

Integrating into a ring topology

The device is integrated via the terminal connection for signal transmission (output 1) and the connection to the service interface (CDI-RJ45).

Note the following when connecting:
- Recommended cable: CAT5e, CAT6 or CAT7, with shielded connector (e.g. brand: YAMAICHI ; Part No Y-ConProfixPlug63 / Prod. ID: 82-006660)
- Maximum cable thickness: 6 mm
- Length of connector including bend protection: 42 mm
- Bending radius: 2.5 x cable thickness

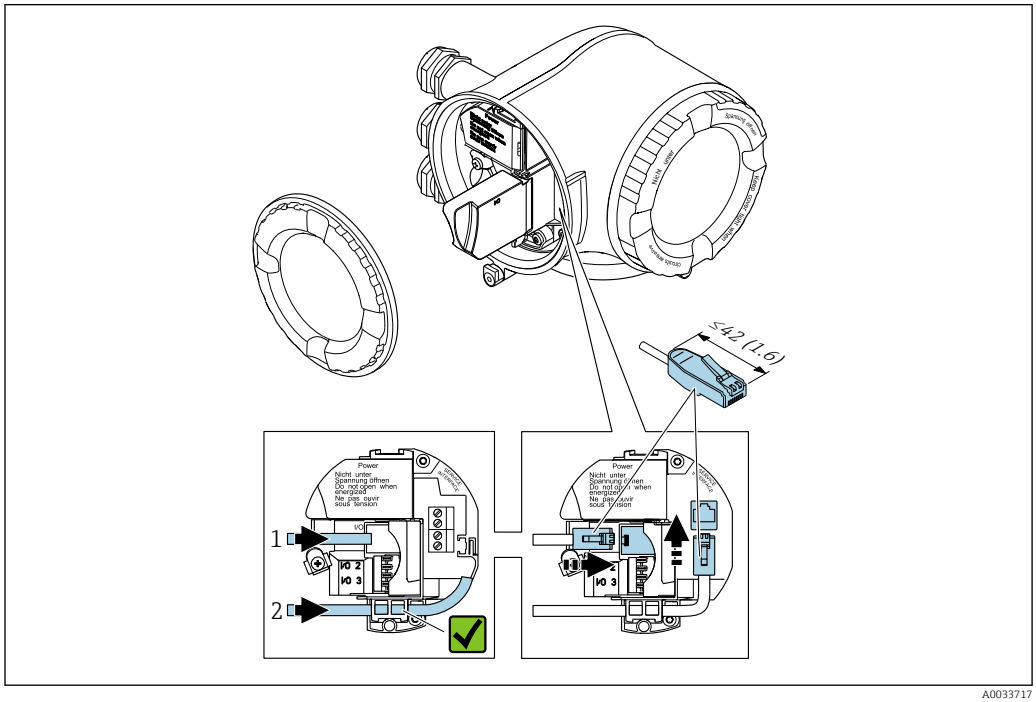

A0033717

1 *EtherNet/IP connection*
2 *Service interface (CDI-RJ45)*

An adapter for RJ45 and the M12 connector is optionally available:
Order code for "Accessories", option **NB**: "Adapter RJ45 M12 (service interface)"

The adapter connects the service interface (CDI-RJ45) to an M12 connector mounted in the cable entry. Therefore the connection to the service interface can be established via an M12 connector without opening the device.

7.4 Ensuring potential equalization

7.4.1 Requirements

No special measures for potential equalization are required.

7.5 Special connection instructions

7.5.1 Connection examples

EtherNet/IP

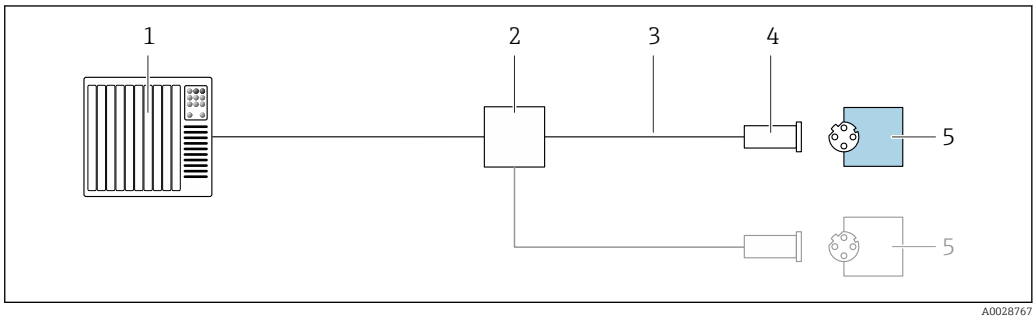

16 *Connection example for EtherNet/IP*

1 *Control system (e.g. PLC)*
2 *Ethernet switch*
3 *Observe cable specifications*
4 *Device plug*
5 *Transmitter*

EtherNet/IP: DLR (Device Level Ring)

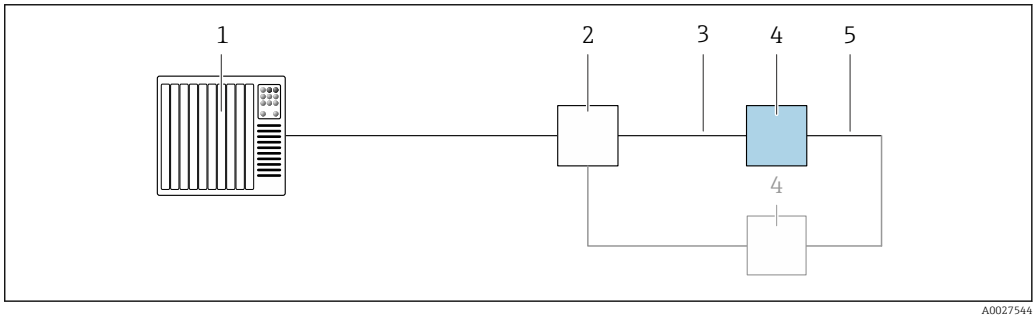

1 *Control system (e.g. PLC)*
2 *Ethernet switch*
3 *Observe cable specifications* → 📄 *34*
4 *Transmitter*
5 *Connecting cable between the two transmitters*

Current output 4-20 mA

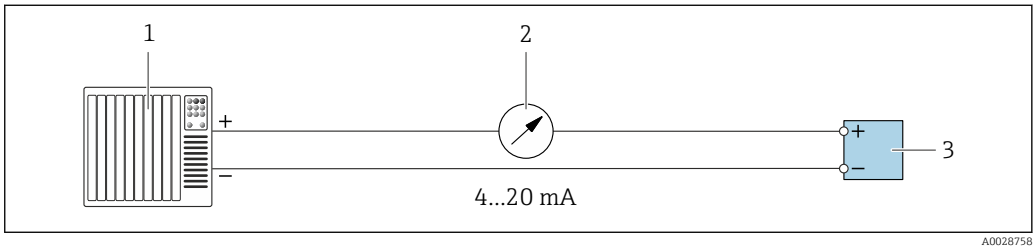

17 *Connection example for 4-20 mA current output (active)*

1 *Automation system with current input (e.g. PLC)*
2 *Analog display unit: observe maximum load*
3 *Transmitter*

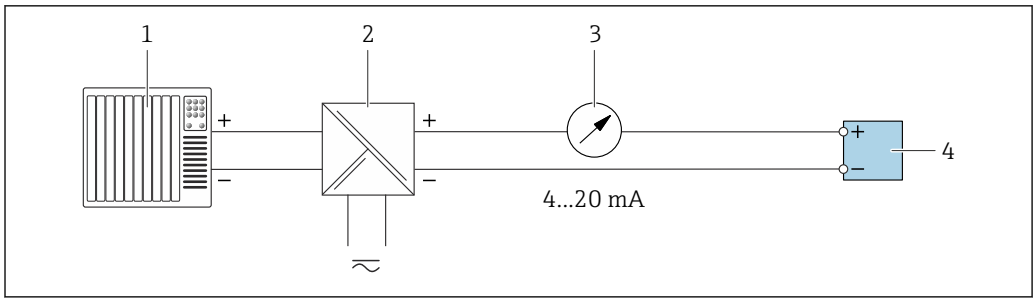

18 Connection example for 4-20 mA current output (passive)

1 *Automation system with current input (e.g. PLC)*
2 *Active barrier for power supply (e.g. RN221N)*
3 *Analog display unit: observe maximum load*
4 *Transmitter*

Pulse/frequency output

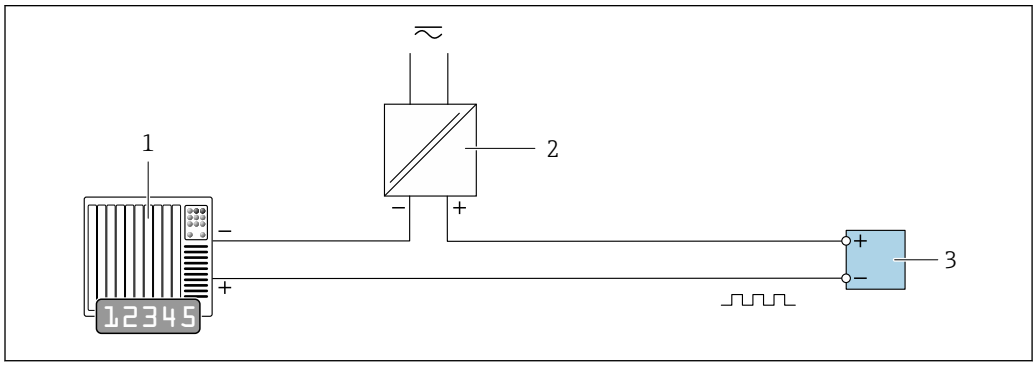

19 Connection example for pulse/frequency output (passive)

1 *Automation system with pulse/frequency input (e.g. PLC)*
2 *Power supply*
3 *Transmitter: Observe input values → 223*

Switch output

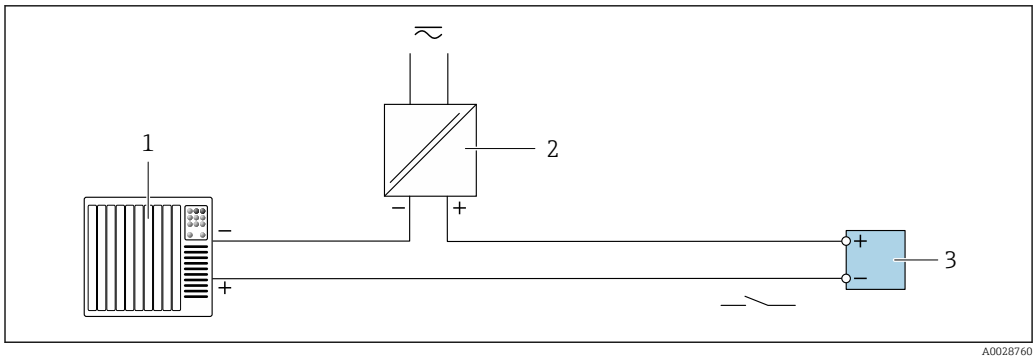

20 Connection example for switch output (passive)

1 *Automation system with switch input (e.g. PLC)*
2 *Power supply*
3 *Transmitter: Observe input values → 223*

Relay output

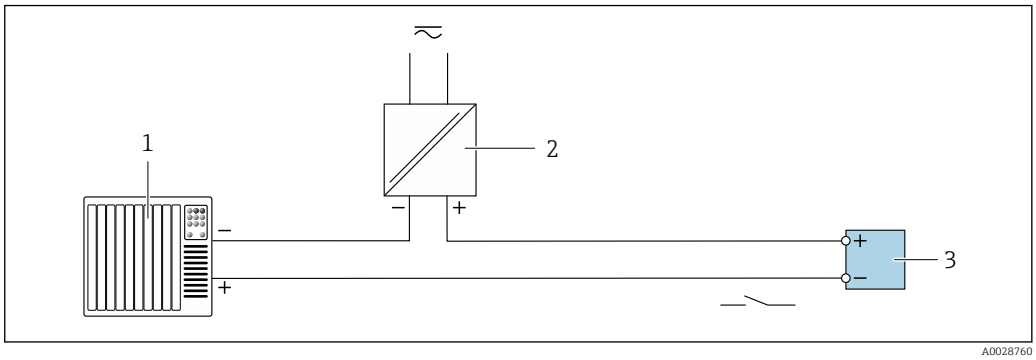

21 Connection example for relay output (passive)

1 *Automation system with relay input (e.g. PLC)*
2 *Power supply*
3 *Transmitter: Observe input values → 224*

Current input

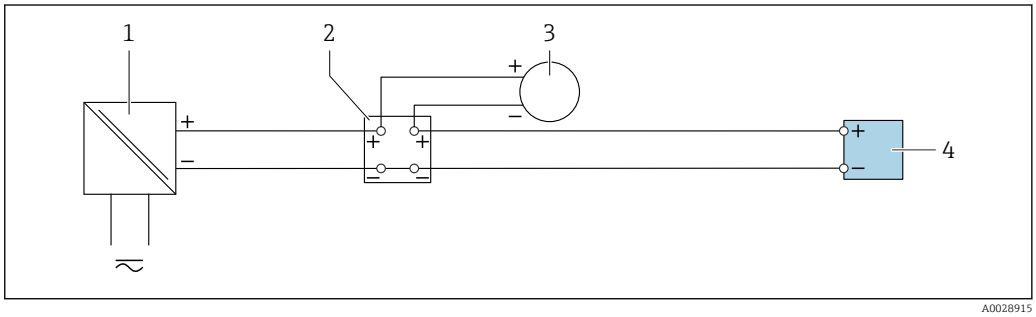

22 Connection example for 4 to 20 mA current input

1 *Power supply*
2 *Terminal box*
3 *External measuring device (to read in pressure or temperature, for instance)*
4 *Transmitter*

Status input

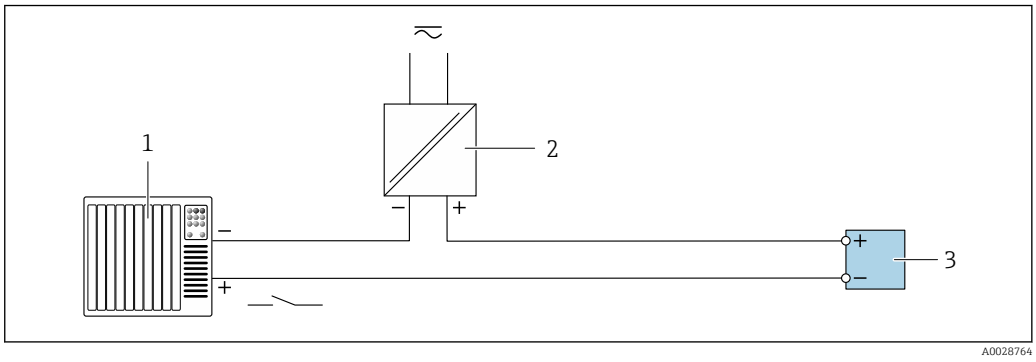

23 Connection example for status input

1 *Automation system with status output (e.g. PLC)*
2 *Power supply*
3 *Transmitter*

7.6 Hardware settings

7.6.1 Setting the device address

The IP address of the measuring device can be configured for the network via DIP switches.

Addressing data

IP address and configuration options			
1st octet	2nd octet	3rd octet	4th octet
192.	**168.**	**1.**	**XXX**
↓			↓
Can only be configured via software addressing			Can be configured via software addressing and hardware addressing

IP address range	1 to 254 (4th octet)
IP address broadcast	255
Addressing mode ex works	Software addressing; all DIP switches for hardware addressing are set to OFF.
IP address ex works	DHCP server active

Software addressing: The IP address is entered via the **IP address** parameter (→ 📄 116).

Setting the IP address: Proline 500 - digital

Risk of electric shock when opening the transmitter housing.
- ▶ Before opening the transmitter housing:
- ▶ Disconnect the device from the power supply.

The default IP address may **not** be activated → 📄 63.

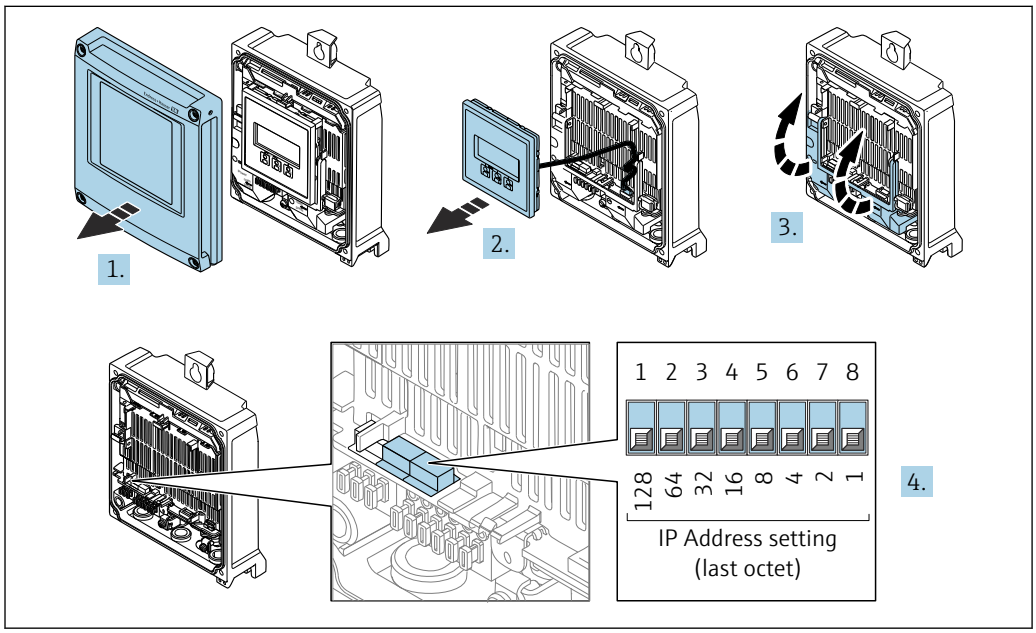

A0029678

1. Loosen the 4 fixing screws on the housing cover.
2. Open the housing cover.
3. Fold open the terminal cover.

4. Set the desired IP address using the corresponding DIP switches on the I/O electronics module.
5. Reverse the removal procedure to reassemble the transmitter.
6. Reconnect the device to the power supply.
   ↳ The configured device address is used once the device is restarted.

Setting the IP address: Proline 500

Risk of electric shock when opening the transmitter housing.
- ▶ Before opening the transmitter housing:
- ▶ Disconnect the device from the power supply.

The default IP address may **not** be activated → 📄 64.

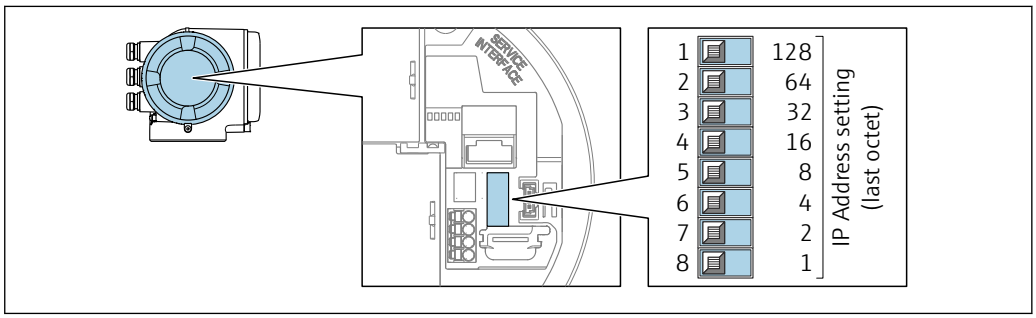

A0029635

1. Depending on the housing version, loosen the securing clamp or fixing screw of the housing cover.
2. Depending on the housing version, unscrew or open the housing cover and disconnect the local display from the main electronics module where necessary.
3. Set the desired IP address using the corresponding DIP switches on the I/O electronics module.
4. Reverse the removal procedure to reassemble the transmitter.
5. Reconnect the device to the power supply.
   ↳ The configured device address is used once the device is restarted.

7.6.2 Activating the default IP address

The DHCP function is enabled in the device at the factory, i.e. the device expects an IP address to be assigned by the network. This function can be disabled and the device can be set to the default IP address 192.168.1.212 by DIP switch.

Activating the default IP address by DIP switch: Proline 500 - digital

Risk of electric shock when opening the transmitter housing.
- ▶ Before opening the transmitter housing:
- ▶ Disconnect the device from the power supply.

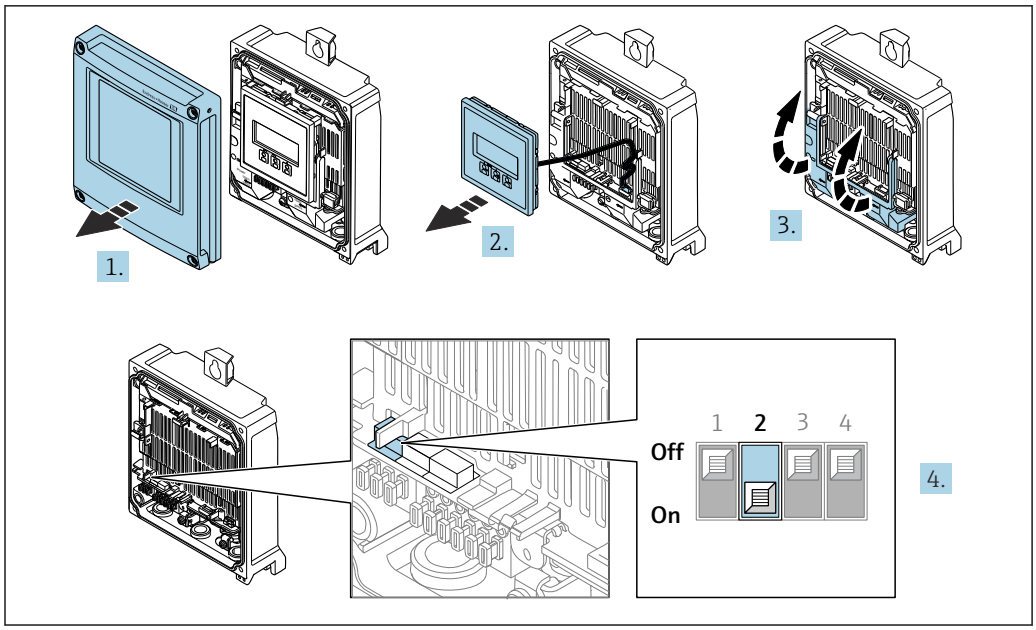

A0034500

1. Loosen the 4 fixing screws on the housing cover.
2. Open the housing cover.
3. Fold open the terminal cover.
4. Set DIP switch No. 2 on the I/O electronics module from **OFF** → **ON**.
5. Reverse the removal procedure to reassemble the transmitter.
6. Reconnect the device to the power supply.
   ↳ The default IP address is used once the device is restarted.

Activating the default IP address by DIP switch: Proline 500

Risk of electric shock when opening the transmitter housing.
- ▶ Before opening the transmitter housing:
- ▶ Disconnect the device from the power supply.

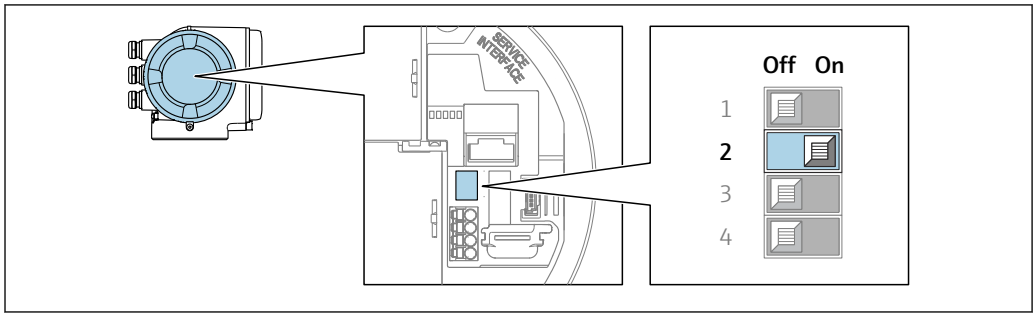

A0034499

1. Depending on the housing version, loosen the securing clamp or fixing screw of the housing cover.
2. Depending on the housing version, unscrew or open the housing cover and disconnect the local display from the main electronics module where necessary .
3. Set DIP switch No. 2 on the I/O electronics module from **OFF** → **ON**.
4. Reverse the removal procedure to reassemble the transmitter.
5. Reconnect the device to the power supply.
   ↳ The default IP address is used once the device is restarted.

7.7 Ensuring the degree of protection

The measuring device fulfills all the requirements for the IP66/67 degree of protection, Type 4X enclosure.

To guarantee IP66/67 degree of protection, Type 4X enclosure, carry out the following steps after the electrical connection:

1. Check that the housing seals are clean and fitted correctly.
2. Dry, clean or replace the seals if necessary.
3. Tighten all housing screws and screw covers.
4. Firmly tighten the cable glands.
5. To ensure that moisture does not enter the cable entry:
   Route the cable so that it loops down before the cable entry ("water trap").
   ↳
   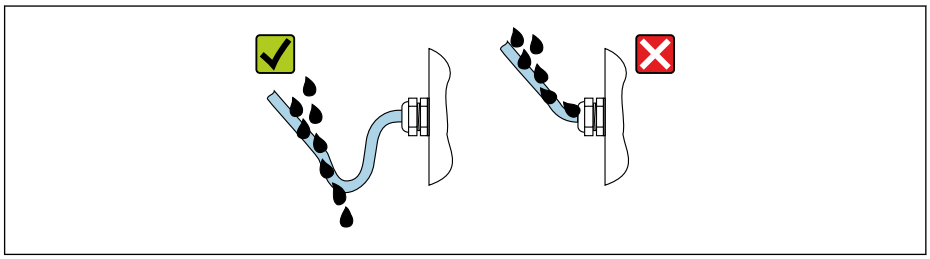
   A0029278
6. Insert dummy plugs into unused cable entries.

7.8 Post-connection check

Are cables or the device undamaged (visual inspection)?	❑
Do the cables used meet the requirements?	❑
Do the cables have adequate strain relief?	❑
Are all the cable glands installed, firmly tightened and leak-tight? Cable run with "water trap" → 🗎 65?	❑

8 Operation options

8.1 Overview of operation options

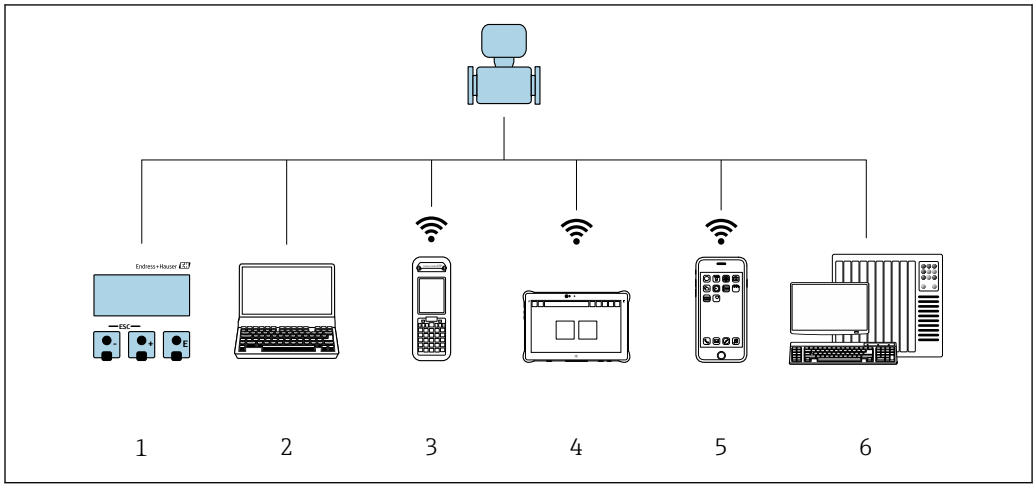

A0034513

1 *Local operation via display module*
2 *Computer with Web browser (e.g. Internet Explorer) or with operating tool (e.g. FieldCare, DeviceCare, AMS Device Manager, SIMATIC PDM)*
3 *Field Xpert SFX350 or SFX370*
4 *Field Xpert SMT70*
5 *Mobile handheld terminal*
6 *Control system (e.g. PLC)*

8.2 Structure and function of the operating menu

8.2.1 Structure of the operating menu

For an overview of the operating menu for experts: "Description of Device Parameters" document supplied with the device→ 248

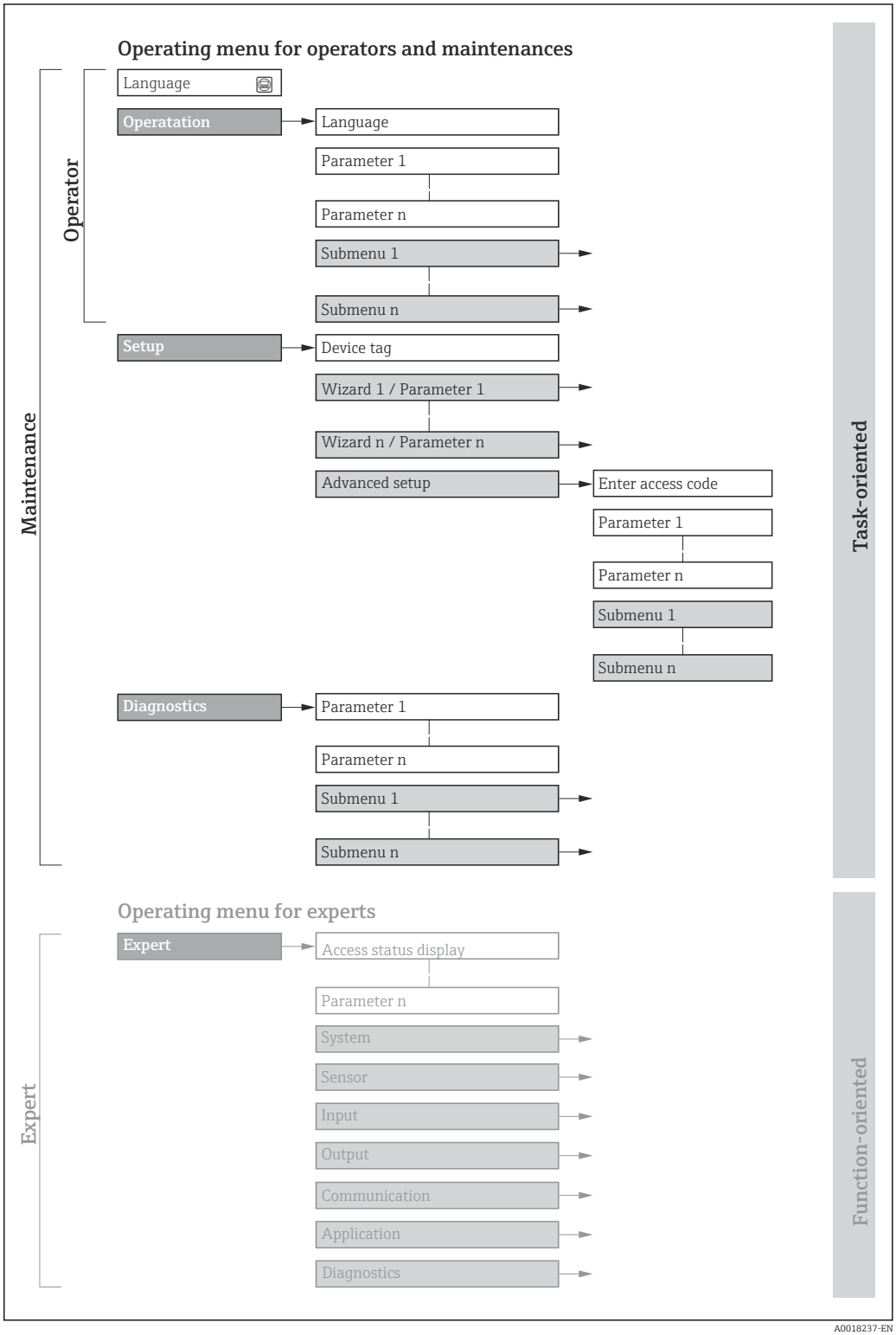

24 *Schematic structure of the operating menu*

8.2.2 Operating philosophy

The individual parts of the operating menu are assigned to certain user roles (operator, maintenance etc.). Each user role contains typical tasks within the device lifecycle.

For custody transfer, once the device has been put into circulation or sealed, its operation is restricted.

Menu/parameter		User role and tasks	Content/meaning
Language	task-oriented	**Role "Operator", "Maintenance"** Tasks during operation: ▪ Configuring the operational display ▪ Reading measured values	▪ Defining the operating language ▪ Defining the Web server operating language ▪ Resetting and controlling totalizers
Operation			▪ Configuring the operational display (e.g. display format, display contrast) ▪ Resetting and controlling totalizers
Setup		**"Maintenance" role** Commissioning: ▪ Configuration of the measurement ▪ Configuration of the inputs and outputs ▪ Configuration of the communication interface	Wizards for fast commissioning: ▪ Setting the system units ▪ Configuration of the communication interface ▪ Defining the medium ▪ Displaying the I/O/configuration ▪ Configuring the inputs ▪ Configuring the outputs ▪ Configuration of the operational display ▪ Setting the low flow cut off ▪ Configuring partial and empty pipe detection Advanced setup ▪ For more customized configuration of the measurement (adaptation to special measuring conditions) ▪ Configuration of totalizers ▪ Configuring the WLAN settings ▪ Administration (define access code, reset measuring device)
Diagnostics		**"Maintenance" role** Fault elimination: ▪ Diagnostics and elimination of process and device errors ▪ Measured value simulation	Contains all parameters for error detection and analyzing process and device errors: ▪ Diagnostic list Contains up to 5 currently pending diagnostic messages. ▪ Event logbook Contains event messages that have occurred. ▪ Device information Contains information for identifying the device. ▪ Measured values Contains all current measured values. ▪ **Data logging** submenu with "Extended HistoROM" order option Storage and visualization of measured values ▪ Heartbeat The functionality of the device is checked on demand and the verification results are documented. ▪ Simulation Is used to simulate measured values or output values.

Menu/parameter		User role and tasks	Content/meaning
Expert	function-oriented	Tasks that require detailed knowledge of the function of the device: ▪ Commissioning measurements under difficult conditions ▪ Optimal adaptation of the measurement to difficult conditions ▪ Detailed configuration of the communication interface ▪ Error diagnostics in difficult cases	Contains all the parameters of the device and makes it possible to access these parameters directly using an access code. The structure of this menu is based on the function blocks of the device: ▪ System Contains all higher-order device parameters which do not concern the measurement or the communication interface. ▪ Sensor Configuration of the measurement. ▪ Input Configuration of the status input. ▪ Output Configuration of the analog current outputs as well as the pulse/frequency and switch output. ▪ Communication Configuration of the digital communication interface and the Web server. ▪ Application Configuration of the functions that go beyond the actual measurement (e.g. totalizer). ▪ Diagnostics Error detection and analysis of process and device errors and for device simulation and Heartbeat Technology.

8.3 Access to the operating menu via the local display

8.3.1 Operational display

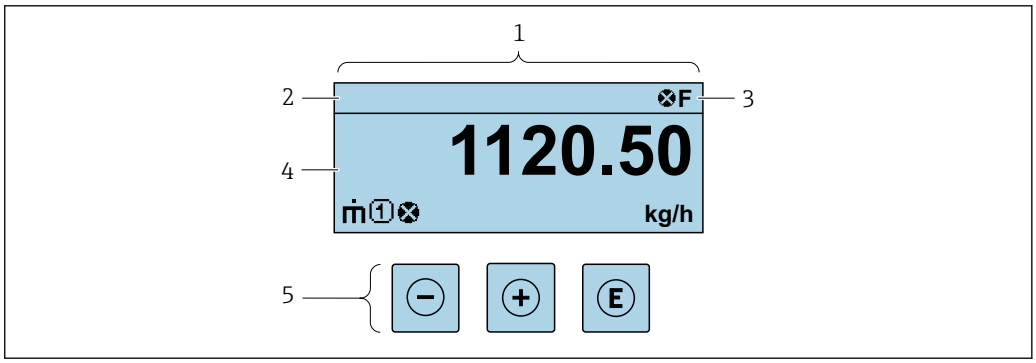

1 *Operational display*
2 *Device tag*
3 *Status area*
4 *Display area for measured values (4-line)*
5 *Operating elements*→ 🗎 *75*

Status area

The following symbols appear in the status area of the operational display at the top right:
- Status signals→ 🗎 186
  - **F**: Failure
  - **C**: Function check
  - **S**: Out of specification
  - **M**: Maintenance required
- Diagnostic behavior→ 🗎 187
  - ⊗: Alarm
  - ⚠: Warning
- 🔒: Locking (the device is locked via the hardware)
- ⇆: Communication (communication via remote operation is active)

Display area

In the display area, each measured value is prefaced by certain symbol types for further description:

	Measured variable	Measurement channel number	Diagnostic behavior
	↓	↓	↓
Example		1	
			Appears only if a diagnostics event is present for this measured variable.

Measured values

Symbol	Meaning
$\dot{m}$	Mass flow
$\dot{V}$	▪ Volume flow ▪ Corrected volume flow
ρ	▪ Density ▪ Reference density
	Temperature
Σ	Totalizer The measurement channel number indicates which of the three totalizers is displayed.
	Output The measurement channel number indicates which of the outputs is displayed.
	Status input

Measurement channel numbers

Symbol	Meaning
1 ... 4	Measurement channel 1 to 4
The measurement channel number is displayed only if more than one channel is present for the same measured variable type (e.g. Totalizer 1 to 3).	

Diagnostic behavior

The diagnostic behavior pertains to a diagnostic event that is relevant to the displayed measured variable. For information on the symbols → 🗎 187

The number and display format of the measured values can be configured via the **Format display** parameter (→ 🗎 137).

8.3.2 Navigation view

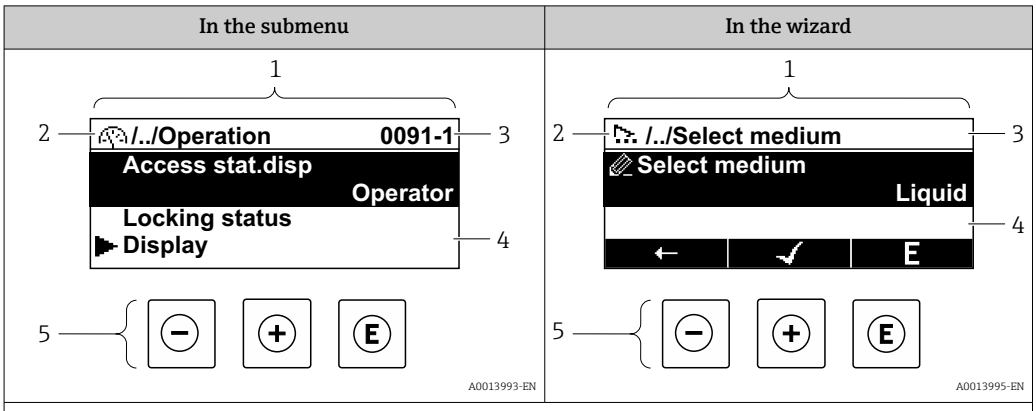

1 *Navigation view*
2 *Navigation path to current position*
3 *Status area*
4 *Display area for navigation*
5 *Operating elements* → 📄 *75*

Navigation path

The navigation path - displayed at the top left in the navigation view - consists of the following elements:

	In the submenu: Display symbol for menu In the wizard: Display symbol for wizard	Omission symbol for operating menu levels in between	Name of current Submenu Wizard Parameters
Examples		/ ../	**Display**
		/ ../	**Display**

For more information about the icons in the menu, refer to the "Display area" section → 📄 72

Status area

The following appears in the status area of the navigation view in the top right corner:
- In the submenu
  - The direct access code for the parameter you are navigating to (e.g. 0022-1)
  - If a diagnostic event is present, the diagnostic behavior and status signal
- In the wizard
  If a diagnostic event is present, the diagnostic behavior and status signal

- For information on the diagnostic behavior and status signal → 📄 186
- For information on the function and entry of the direct access code → 📄 77

Display area

Menus

Symbol	Meaning
	Operation Appears: ▪ In the menu next to the "Operation" selection ▪ At the left in the navigation path in the **Operation** menu
	Setup Appears: ▪ In the menu next to the "Setup" selection ▪ At the left in the navigation path in the **Setup** menu
	Diagnostics Appears: ▪ In the menu next to the "Diagnostics" selection ▪ At the left in the navigation path in the **Diagnostics** menu
	Expert Appears: ▪ In the menu next to the "Expert" selection ▪ At the left in the navigation path in the **Expert** menu

Submenus, wizards, parameters

Symbol	Meaning
	Submenu
	Wizard
	Parameters within a wizard No display symbol exists for parameters in submenus.

Locking

Symbol	Meaning
	Parameter locked When displayed in front of a parameter name, indicates that the parameter is locked. ▪ By a user-specific access code ▪ By the hardware write protection switch

Wizard operation

Symbol	Meaning
	Switches to the previous parameter.
	Confirms the parameter value and switches to the next parameter.
E	Opens the editing view of the parameter.

8.3.3 Editing view

Numeric editor

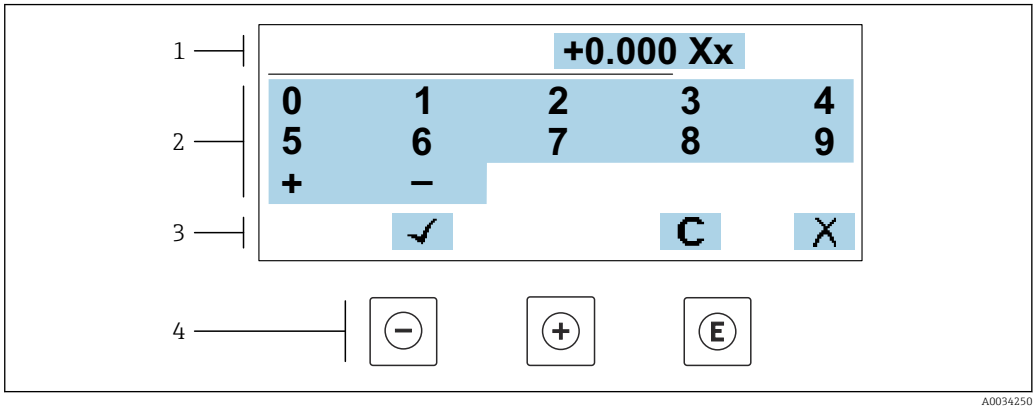

25 *For entering values in parameters (e.g. limit values)*

1 *Entry display area*
2 *Input screen*
3 *Confirm, delete or reject entry*
4 *Operating elements*

Text editor

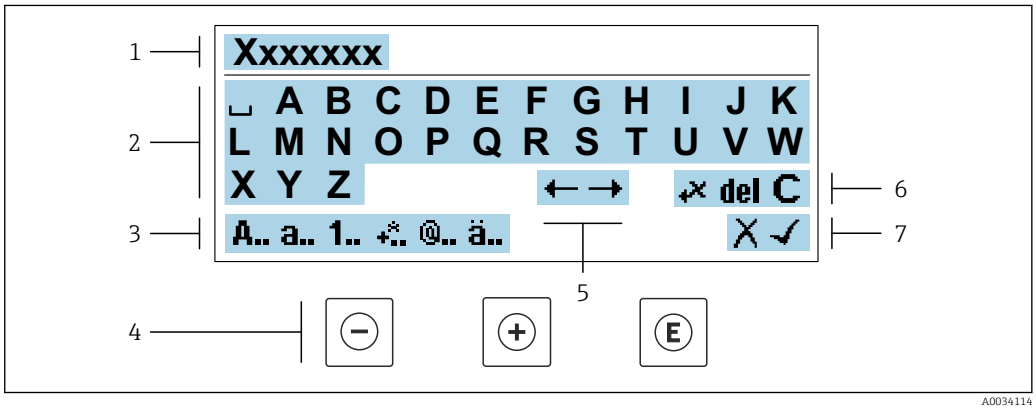

26 *For entering text in parameters (e.g. tag name)*

1 *Entry display area*
2 *Current input screen*
3 *Change input screen*
4 *Operating elements*
5 *Move entry position*
6 *Delete entry*
7 *Reject or confirm entry*

Using the operating elements in the editing view

Operating key(s)	Meaning
⊖	**Minus key** Move the entry position to the left.
⊕	**Plus key** Move the entry position to the right.

Operating key(s)	Meaning
Ⓔ	**Enter key** ▪ Press the key briefly: confirm your selection. ▪ Press the key for 2 s: confirm the entry.
⊖ + ⊕	**Escape key combination (press keys simultaneously)** Close the editing view without accepting the changes.

Input screens

Symbol	Meaning
A..	Upper case
a..	Lower case
1..	Numbers
+..	Punctuation marks and special characters: = + – * / ² ³ ¼ ½ ¾ ( ) [ ] < > { }
@..	Punctuation marks and special characters: ' " ` ^ . , ; : ? ! % µ ° € $ £ ¥ § @ # / \ I ~ & _
ä..	Umlauts and accents

Controlling data entries

Symbol	Meaning
←→	Move entry position
✕	Reject entry
✓	Confirm entry
←✕	Delete character immediately to the left of the entry position
del	Delete character immediately to the right of the entry position
C	Clear all the characters entered

8.3.4 Operating elements

Operating key(s)	Meaning
⊖	**Minus key** *In a menu, submenu* Moves the selection bar upwards in a picklist. *With a Wizard* Confirms the parameter value and goes to the previous parameter. *With a text and numeric editor* Move the entry position to the left.
⊕	**Plus key** *In a menu, submenu* Moves the selection bar downwards in a picklist. *With a Wizard* Confirms the parameter value and goes to the next parameter. *With a text and numeric editor* Move the entry position to the right.

E	**Enter key**
	For operational display
	Pressing the key briefly opens the operating menu.
	In a menu, submenu
	▪ Pressing the key briefly:
	  ▪ Opens the selected menu, submenu or parameter.
	  ▪ Starts the wizard.
	  ▪ If help text is open, closes the help text of the parameter.
	▪ Pressing the key for 2 s for parameter:
	  If present, opens the help text for the function of the parameter.
	With a Wizard
	Opens the editing view of the parameter.
	With a text and numeric editor
	▪ Press the key briefly: confirm your selection.
	▪ Press the key for 2 s: confirm the entry.

⊖ + ⊕	**Escape key combination (press keys simultaneously)**
	In a menu, submenu
	▪ Pressing the key briefly:
	  ▪ Exits the current menu level and takes you to the next higher level.
	  ▪ If help text is open, closes the help text of the parameter.
	▪ Pressing the key for 2 s returns you to the operational display ("home position").
	With a Wizard
	Exits the wizard and takes you to the next higher level.
	With a text and numeric editor
	Close the editing view without accepting the changes.

⊖ + E	**Minus/Enter key combination (press the keys simultaneously)**
	▪ If the keypad lock is active:
	  Press the key for 3 s: deactivate the keypad lock.
	▪ If the keypad lock is not active:
	  Press the key for 3 s: the context menu opens along with the option for activating the keypad lock.

8.3.5 Opening the context menu

Using the context menu, the user can call up the following menus quickly and directly from the operational display:

- Setup
- Data backup
- Simulation

Calling up and closing the context menu

The user is in the operational display.

1. Press the ⊟ and Ⓔ keys for longer than 3 seconds.
   ↳ The context menu opens.

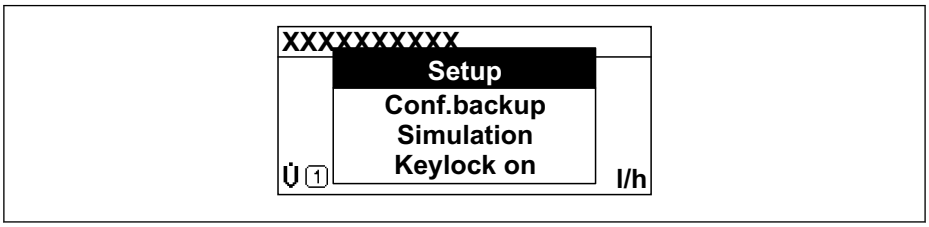

2. Press ⊟ + ⊞ simultaneously.
   ↳ The context menu is closed and the operational display appears.

Calling up the menu via the context menu

1. Open the context menu.
2. Press ⊞ to navigate to the desired menu.
3. Press Ⓔ to confirm the selection.
   ↳ The selected menu opens.

8.3.6 Navigating and selecting from list

Different operating elements are used to navigate through the operating menu. The navigation path is displayed on the left in the header. Icons are displayed in front of the individual menus. These icons are also shown in the header during navigation.

For an explanation of the navigation view with symbols and operating elements → 71

Example: Setting the number of displayed measured values to "2 values"

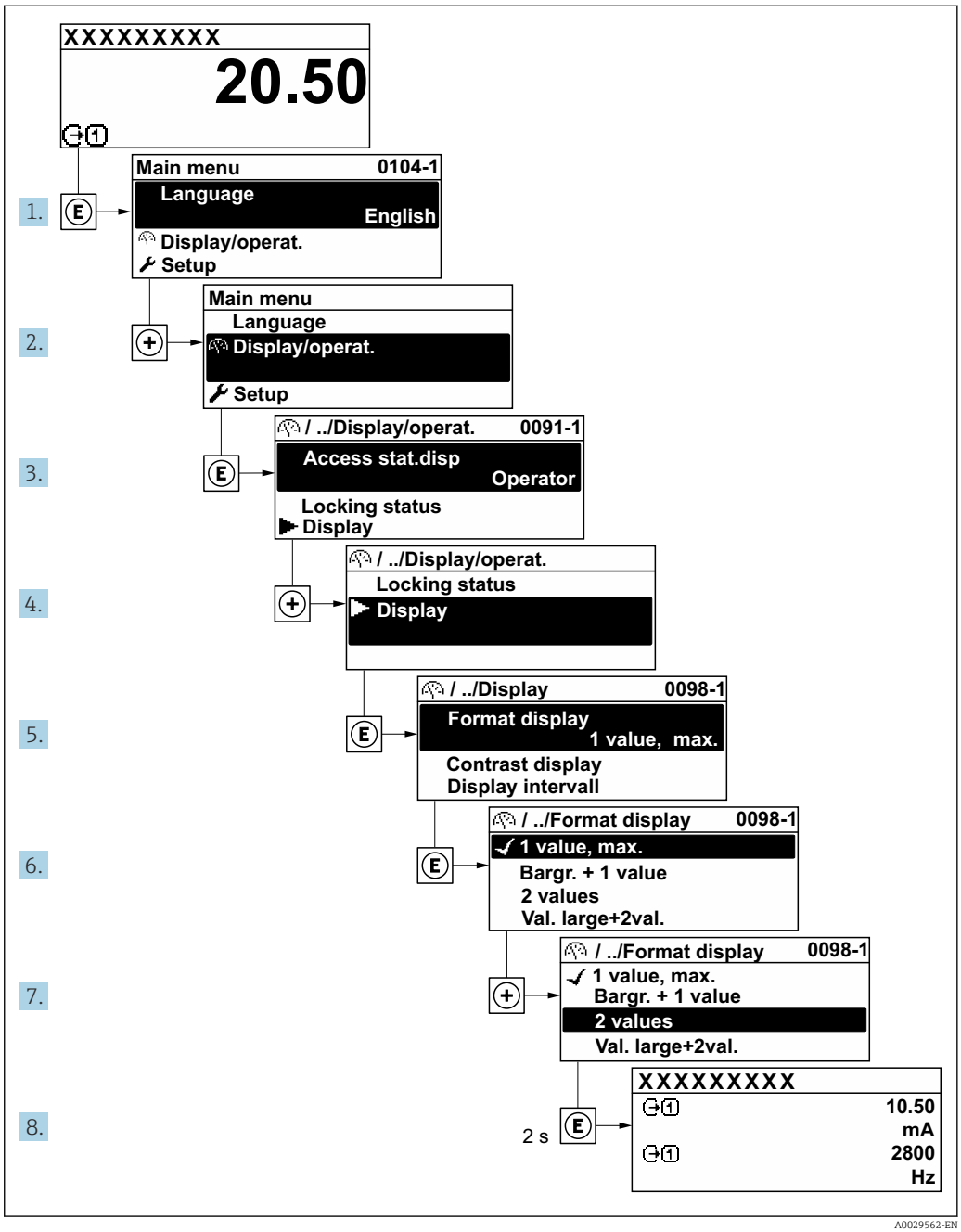

8.3.7 Calling the parameter directly

A parameter number is assigned to every parameter to be able to access a parameter directly via the onsite display. Entering this access code in the **Direct access** parameter calls up the desired parameter directly.

Navigation path
Expert → Direct access

The direct access code consists of a 5-digit number (at maximum) and the channel number, which identifies the channel of a process variable: e.g. 00914-2. In the navigation view, this appears on the right-hand side in the header of the selected parameter.

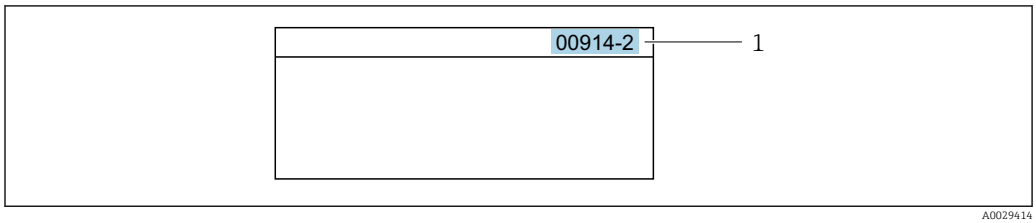

1 Direct access code

Note the following when entering the direct access code:
- The leading zeros in the direct access code do not have to be entered.
  Example: Enter **"914"** instead of **"00914"**
- If no channel number is entered, channel 1 is accessed automatically.
  Example: Enter **00914** → **Assign process variable** parameter
- If a different channel is accessed: Enter the direct access code with the corresponding channel number.
  Example: Enter **00914-2** → **Assign process variable** parameter

For the direct access codes of the individual parameters, see the "Description of Device Parameters" document for the device

8.3.8 Calling up help text

Help text is available for some parameters and can be called up from the navigation view. The help text provides a brief explanation of the parameter function and thereby supports swift and safe commissioning.

Calling up and closing the help text

The user is in the navigation view and the selection bar is on a parameter.

1. Press E for 2 s.
   ↳ The help text for the selected parameter opens.

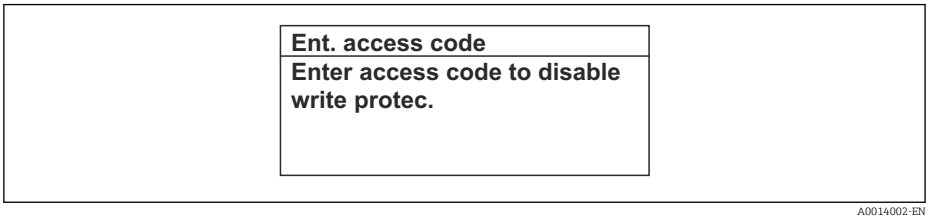

27 Example: Help text for parameter "Enter access code"

2. Press − + + simultaneously.
   ↳ The help text is closed.

8.3.9 Changing the parameters

Parameters can be changed via the numeric editor or text editor.
- Numeric editor: Change values in a parameter, e.g. specifications for limit values.
- Text editor: Enter text in a parameter, e.g. tag name.

A message is displayed if the value entered is outside the permitted value range.

Ent. access code
Invalid or out of range input value Min:0 Max:9999

A0014049-EN

For a description of the editing view - consisting of the text editor and numeric editor - with symbols → 73, for a description of the operating elements → 75

8.3.10 User roles and related access authorization

The two user roles "Operator" and "Maintenance" have different write access to the parameters if the customer defines a user-specific access code. This protects the device configuration via the local display from unauthorized access → 165.

Defining access authorization for user roles

An access code is not yet defined when the device is delivered from the factory. Access authorization (read and write access) to the device is not restricted and corresponds to the "Maintenance" user role.

- Define the access code.
  - The "Operator" user role is redefined in addition to the "Maintenance" user role. Access authorization differs for the two user roles.

Access authorization to parameters: "Maintenance" user role

Access code status	Read access	Write access
An access code has not yet been defined (factory setting).	✔	✔
After an access code has been defined.	✔	✔ [1]

1) The user only has write access after entering the access code.

Access authorization to parameters: "Operator" user role

Access code status	Read access	Write access
After an access code has been defined.	✔	-- [1]

1) Despite the defined access code, certain parameters can always be modified and thus are excepted from the write protection, as they do not affect the measurement. Refer to the "Write protection via access code" section

The user role with which the user is currently logged on is indicated by the **Access status** parameter. Navigation path: Operation → Access status

8.3.11 Disabling write protection via access code

If the 🔒-symbol appears on the local display in front of a parameter, the parameter is write-protected by a user-specific access code and its value cannot be changed at the moment using local operation → 165.

Parameter write protection via local operation can be disabled by entering the user-specific access code in the **Enter access code** parameter (→ 145) via the respective access option.

1. After you press E, the input prompt for the access code appears.

2. Enter the access code.
   ↳ The 🔒-symbol in front of the parameters disappears; all previously write-protected parameters are now re-enabled.

8.3.12 Enabling and disabling the keypad lock

The keypad lock makes it possible to block access to the entire operating menu via local operation. As a result, it is no longer possible to navigate through the operating menu or change the values of individual parameters. Users can only read the measured values on the operational display.

The keypad lock is switched on and off via the context menu.

Switching on the keypad lock

The keypad lock is switched on automatically:
- If the device has not been operated via the display for > 1 minute.
- Each time the device is restarted.

To activate the keylock manually:

1. The device is in the measured value display.
   Press the ⊟ and Ⓔ keys for 3 seconds.
   ↳ A context menu appears.
2. In the context menu select the **Keylock on** option.
   ↳ The keypad lock is switched on.

If the user attempts to access the operating menu while the keypad lock is active, the **Keylock on** message appears.

Switching off the keypad lock

- The keypad lock is switched on.
  Press the ⊟ and Ⓔ keys for 3 seconds.
  ↳ The keypad lock is switched off.

8.4 Access to the operating menu via the Web browser

8.4.1 Function range

Thanks to the integrated Web server, the device can be operated and configured via a Web browser and via a service interface (CDI-RJ45) or via a WLAN interface. The structure of the operating menu is the same as for the local display. In addition to the measured values, status information on the device is also displayed and allows the user to monitor the status of the device. Furthermore the device data can be managed and the network parameters can be configured.

A device that has a WLAN interface (can be ordered as an option) is required for the WLAN connection: order code for "Display; operation", option G "4-line, illuminated; touch control + WLAN". The device acts as an Access Point and enables communication by computer or a mobile handheld terminal.

For additional information on the Web server, refer to the Special Documentation for the device → 📖 248

8.4.2 Prerequisites

Computer hardware

Hardware	Interface	
	CDI-RJ45	WLAN
Interface	The computer must have an RJ45 interface.	The operating unit must have a WLAN interface.
Connection	Standard Ethernet cable with RJ45 connector.	Connection via Wireless LAN.
Screen	Recommended size: ≥12" (depends on the screen resolution)	

Computer software

Software	Interface	
	CDI-RJ45	WLAN
Recommended operating systems	▪ Microsoft Windows 7 or higher. ▪ Mobile operating systems: ▪ iOS ▪ Android Microsoft Windows XP is supported.	
Web browsers supported	▪ Microsoft Internet Explorer 8 or higher ▪ Microsoft Edge ▪ Mozilla Firefox ▪ Google Chrome ▪ Safari	

Computer settings

Settings	Interface	
	CDI-RJ45	WLAN
User rights	Appropriate user rights (e.g. administrator rights) for TCP/IP and proxy server settings are necessary (for adjusting the IP address, subnet mask etc.).	
Proxy server settings of the Web browser	The Web browser setting *Use a Proxy Server for Your LAN* must be **deselected** .	
JavaScript	JavaScript must be enabled. If JavaScript cannot be enabled: enter http://192.168.1.212/basic.html in the address line of the Web browser. A fully functional but simplified version of the operating menu structure starts in the Web browser. When installing a new firmware version: To enable correct data display, clear the temporary memory (cache) of the Web browser under **Internet options**.	
Network connections	Only the active network connections to the measuring device should be used.	
	Switch off all other network connections such as WLAN.	Switch off all other network connections.

In the event of connection problems: → 181

Measuring device: Via CDI-RJ45 service interface

Device	CDI-RJ45 service interface
Measuring device	The measuring device has an RJ45 interface.
Web server	Web server must be enabled; factory setting: ON For information on enabling the Web server → 87
IP address	If the IP address of the device is not known: ▪ The IP address can be read out via local operation: Diagnostics → Device information → IP address ▪ Communication with the Web server can be established via the default IP address 192.168.1.212. The DHCP function is enabled in the device at the factory, i.e. the device expects an IP address to be assigned by the network. This function can be disabled and the device can be set to the default IP address 192.168.1.212: set DIP switch No. 4 from **OFF** → **ON**. Set the default IP address → 63.

Measuring device: via WLAN interface

Device	WLAN interface
Measuring device	The measuring device has a WLAN antenna: ▪ Transmitter with integrated WLAN antenna ▪ Transmitter with external WLAN antenna
Web server	Web server and WLAN must be enabled; factory setting: ON For information on enabling the Web server → 87
IP address	If the IP address of the device is not known: ▪ The IP address can be read out via local operation: Diagnostics → Device information → IP address ▪ Communication with the Web server can be established via the default IP address 192.168.1.212. The DHCP function is enabled in the device at the factory, i.e. the device expects an IP address to be assigned by the network. This function can be disabled and the device can be set to the default IP address 192.168.1.212: set DIP switch No. 4 from **OFF** → **ON**. Set the default IP address → 63.

8.4.3 Establishing a connection

Via service interface (CDI-RJ45)

Preparing the measuring device

Proline 500 – digital

1. Loosen the 4 fixing screws on the housing cover.
2. Open the housing cover.
3. The location of the connection socket depends on the measuring device and the communication protocol:
   Connect the computer to the RJ45 connector via the standard Ethernet connecting cable .

Proline 500

1. Depending on the housing version:
   Release the securing clamp or securing screw of the housing cover.

2. Depending on the housing version:
   Unscrew or open the housing cover.
3. The location of the connection socket depends on the measuring device and the communication protocol:
   Connect the computer to the RJ45 connector via the standard Ethernet connecting cable .

Configuring the Internet protocol of the computer

The IP address can be assigned to the measuring device in a variety of ways:
- Dynamic Host Configuration Protocol (DHCP), factory setting:
  The IP address is automatically assigned to the measuring device by the automation system (DHCP server).
- Hardware addressing:
  The IP address is set via DIP switches → 📄 62.
- Software addressing:
  The IP address is entered via the **IP address** parameter (→ 📄 116) .
- DIP switch for "Default IP address":
  To establish the network connection via the service interface (CDI-RJ45): the fixed IP address 192.168.1.212 is used → 📄 63.

The measuring device works with the Dynamic Host Configuration Protocol (DHCP), on leaving the factory, i.e. the IP address of the measuring device is automatically assigned by the automation system (DHCP server).

To establish a network connection via the service interface (CDI-RJ45): set the "Default IP address" DIP switch to **ON**. The measuring device then has the fixed IP address: 192.168.1.212. This address can now be used to establish the network connection.

1. Via DIP switch 2, activate the default IP address 192.168.1.212: → 📄 63.
2. Switch on the measuring device.
3. Connect to the computer using a cable → 📄 89.
4. If a 2nd network card is not used, close all the applications on the notebook.
   ↳ Applications requiring Internet or a network, such as e-mail, SAP applications, Internet or Windows Explorer.
5. Close any open Internet browsers.
6. Configure the properties of the Internet protocol (TCP/IP) as defined in the table:

IP address	192.168.1.XXX; for XXX all numerical sequences except: 0, 212 and 255 → e.g. 192.168.1.213
Subnet mask	255.255.255.0
Default gateway	192.168.1.212 or leave cells empty

Via WLAN interface

Configuring the Internet protocol of the mobile terminal

NOTICE

If the WLAN connection is lost during the configuration, settings made may be lost.
- Make sure that the WLAN connection is not disconnected while configuring the device.

NOTICE

In principle, avoid simultaneous access to the measuring device via the service interface (CDI-RJ45) and the WLAN interface from the same mobile terminal. This could cause a network conflict.
- Only activate one service interface (CDI-RJ45 service interface or WLAN interface).
- If simultaneous communication is necessary: configure different IP address ranges, e.g. 192.168.0.1 (WLAN interface) and 192.168.1.212 (CDI-RJ45 service interface).

Preparing the mobile terminal

- Enable WLAN reception on the mobile terminal.

Establishing a connection from the mobile terminal to the measuring device

1. In the WLAN settings of the mobile terminal:
   Select the measuring device using the SSID (e.g. EH_Promass_500_A802000).
2. If necessary, select the WPA2 encryption method.
3. Enter the password: serial number of the measuring device ex-works (e.g. L100A802000).
   ↳ LED on display module flashes: it is now possible to operate the measuring device with the Web browser, FieldCare or DeviceCare.

The serial number can be found on the nameplate.

To ensure the safe and swift assignment of the WLAN network to the measuring point, it is advisable to change the SSID name. It should be possible to clearly assign the new SSID name to the measuring point (e.g. tag name) because it is displayed as the WLAN network.

Disconnecting

- After configuring the device:
  Terminate the WLAN connection between the operating unit and measuring device.

Starting the Web browser

1. Start the Web browser on the computer.

2. Enter the IP address of the Web server in the address line of the Web browser: 192.168.1.212
   ↳ The login page appears.

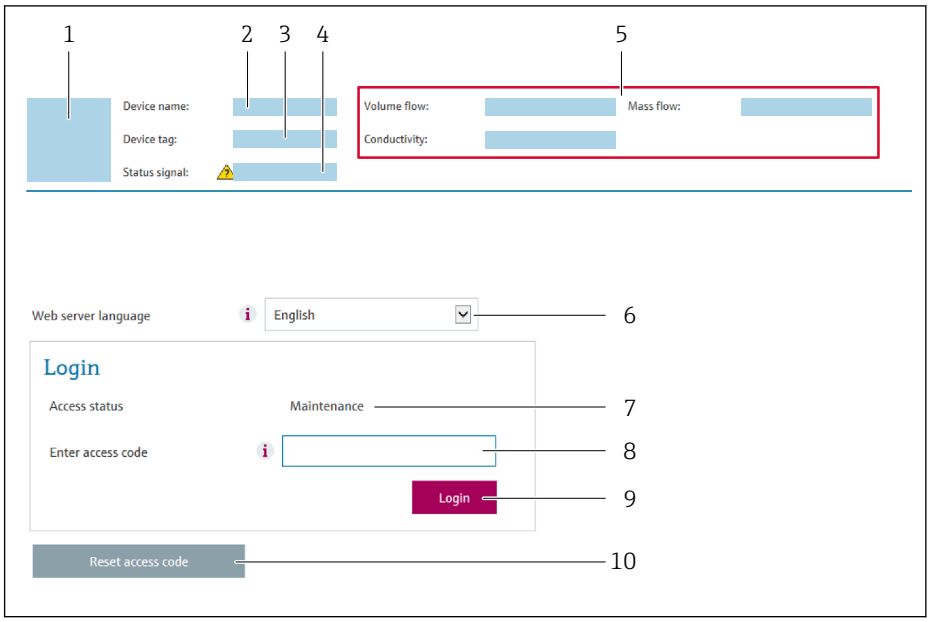

A0029417

1 *Picture of device*
2 *Device name*
3 *Device tag*
4 *Status signal*
5 *Current measured values*
6 *Operating language*
7 *User role*
8 *Access code*
9 *Login*
10 *Reset access code (→ 🗎 161)*

If a login page does not appear, or if the page is incomplete → 🗎 181

8.4.4 Logging on

1. Select the preferred operating language for the Web browser.
2. Enter the user-specific access code.
3. Press **OK** to confirm your entry.

Access code	0000 (factory setting); can be changed by customer

If no action is performed for 10 minutes, the Web browser automatically returns to the login page.

8.4.5 User interface

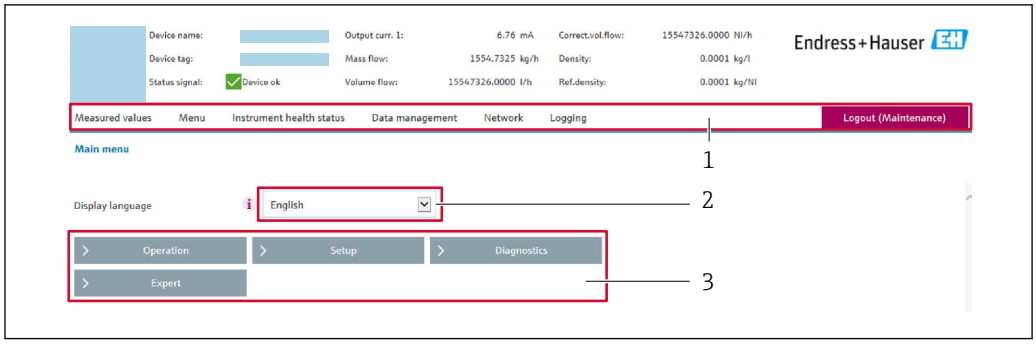

A0029418

1 *Function row*
2 *Local display language*
3 *Navigation area*

Header

The following information appears in the header:
- Device name
- Device tag
- Device status with status signal → 📄 189
- Current measured values

Function row

Functions	Meaning
Measured values	Displays the measured values of the measuring device
Menu	▪ Access to the operating menu from the measuring device ▪ The structure of the operating menu is the same as for the local display For detailed information on the structure of the operating menu, see the Operating Instructions for the measuring device
Device status	Displays the diagnostic messages currently pending, listed in order of priority

Data management	Data exchange between PC and measuring device:
	▪ Device configuration:
	  ▪ Load settings from the device (XML format, save configuration)
	  ▪ Save settings to the device (XML format, restore configuration)
	▪ Logbook - Export Event logbook (.csv file)
	▪ Documents - Export documents:
	  ▪ Export backup data record (.csv file, create documentation of the measuring point configuration)
	  ▪ Verification report (PDF file, only available with the "Heartbeat Verification" application package)
	▪ File for system integration - If using fieldbuses, upload device drivers for system integration from the measuring device: EtherNet/IP: EDS file
	▪ Firmware update - Flashing a firmware version

Network configuration	Configuration and checking of all the parameters required for establishing the connection to the measuring device: ▪ Network settings (e.g. IP address, MAC address) ▪ Device information (e.g. serial number, firmware version)
Logout	End the operation and call up the login page

Navigation area

If a function is selected in the function bar, the submenus of the function open in the navigation area. The user can now navigate through the menu structure.

Working area

Depending on the selected function and the related submenus, various actions can be performed in this area:
- Configuring parameters
- Reading measured values
- Calling up help text
- Starting an upload/download

8.4.6 Disabling the Web server

The Web server of the measuring device can be switched on and off as required using the **Web server functionality** parameter.

Navigation

"Expert" menu → Communication → Web server

Parameter overview with brief description

Parameter	Description	Selection
Web server functionality	Switch the Web server on and off.	▪ Off ▪ HTML Off ▪ On

Function scope of the "Web server functionality" parameter

Option	Description
Off	▪ The web server is completely disabled. ▪ Port 80 is locked.
On	▪ The complete functionality of the web server is available. ▪ JavaScript is used. ▪ The password is transferred in an encrypted state. ▪ Any change to the password is also transferred in an encrypted state.

Enabling the Web server

If the Web server is disabled it can only be re-enabled with the **Web server functionality** parameter via the following operating options:
- Via local display
- Via Bedientool "FieldCare"
- Via "DeviceCare" operating tool

8.4.7 Logging out

Before logging out, perform a data backup via the **Data management** function (upload configuration from device) if necessary.

1. Select the **Logout** entry in the function row.
   ↳ The home page with the Login box appears.
2. Close the Web browser.

3. If no longer needed:
   Reset modified properties of the Internet protocol (TCP/IP) → 🗎 83.

If communication with the Web server was established via the default IP address 192.168.1.212, DIP switch No. 10 must be reset (from **ON** → **OFF**). Afterwards, the IP address of the device is active again for network communication.

8.5 Access to the operating menu via the operating tool

The structure of the operating menu in the operating tools is the same as for operation via the local display.

8.5.1 Connecting the operating tool

Via EtherNet/IP network

This communication interface is available in device versions with EtherNet/IP.

Star topology

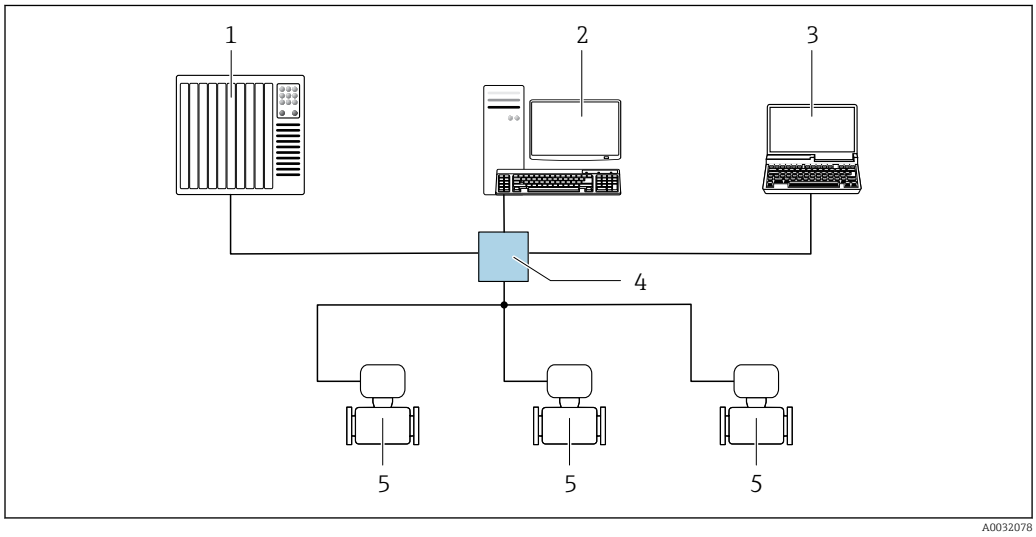

28 Options for remote operation via EtherNet/IP network: star topology

1 *Automation system, e.g. "RSLogix" (Rockwell Automation)*
2 *Workstation for measuring device operation: with Custom Add-On Profile for "RSLogix 5000" (Rockwell Automation) or with Electronic Data Sheet (EDS)*
3 *Computer with Web browser (e.g. Internet Explorer) for accessing the integrated device Web server or computer with operating tool (e.g. FieldCare, DeviceCare) with COM DTM "CDI Communication TCP/IP"*
4 *Ethernet switch*
5 *Measuring device*

Ring topology

The device is integrated via the terminal connection for signal transmission (output 1) and the service interface (CDI-RJ45).

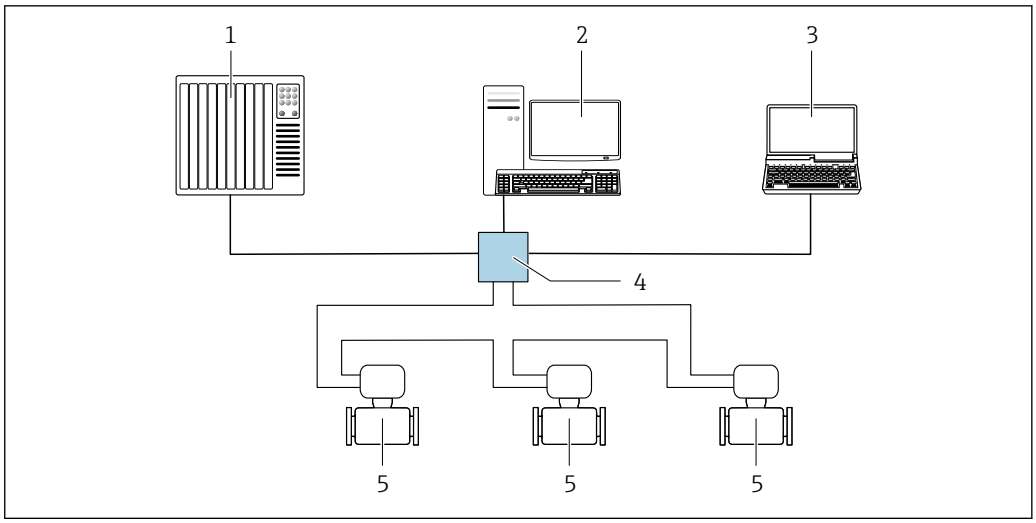

29 *Options for remote operation via EtherNet/IP network: ring topology*

1 *Automation system, e.g. "RSLogix" (Rockwell Automation)*
2 *Workstation for measuring device operation: with Custom Add-On Profile for "RSLogix 5000" (Rockwell Automation) or with Electronic Data Sheet (EDS)*
3 *Computer with Web browser (e.g. Internet Explorer) for accessing the integrated device Web server or computer with operating tool (e.g. FieldCare, DeviceCare) with COM DTM "CDI Communication TCP/IP"*
4 *Ethernet switch*
5 *Measuring device*

Service interface

Via service interface (CDI-RJ45)

A point-to-point connection can be established to configure the device onsite. With the housing open, the connection is established directly via the service interface (CDI-RJ45) of the device.

An adapter for RJ45 and the M12 connector is optionally available:
Order code for "Accessories", option **NB**: "Adapter RJ45 M12 (service interface)"

The adapter connects the service interface (CDI-RJ45) to an M12 connector mounted in the cable entry. Therefore the connection to the service interface can be established via an M12 connector without opening the device.

Proline 500 – digital transmitter

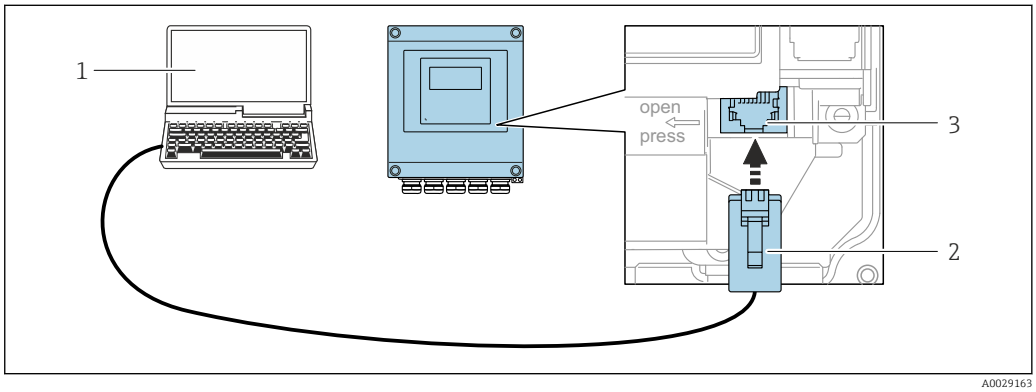

30 *Connection via service interface (CDI-RJ45)*

1 *Computer with Web browser (e.g. Microsoft Internet Explorer, Microsoft Edge) for accessing the integrated device Web server or with "FieldCare", "DeviceCare" operating tool with COM DTM "CDI Communication TCP/IP"*
2 *Standard Ethernet connecting cable with RJ45 connector*
3 *Service interface (CDI-RJ45) of the measuring device with access to the integrated Web server*

Proline 500 transmitter

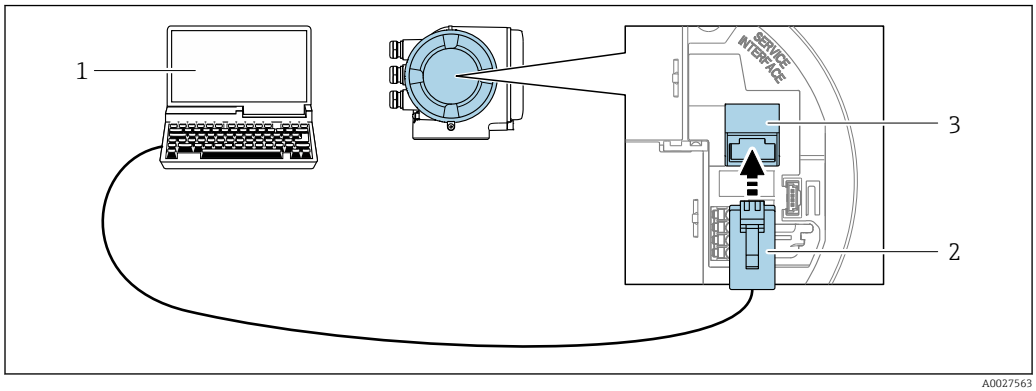

A0027563

31 Connection via service interface (CDI-RJ45)

1 *Computer with Web browser (e.g. Microsoft Internet Explorer, Microsoft Edge) for accessing the integrated device Web server or with "FieldCare", "DeviceCare" operating tool with COM DTM "CDI Communication TCP/IP"*
2 *Standard Ethernet connecting cable with RJ45 connector*
3 *Service interface (CDI-RJ45) of the measuring device with access to the integrated Web server*

Via WLAN interface

The optional WLAN interface is available on the following device version:
Order code for "Display; operation", option G "4-line, illuminated; touch control + WLAN"

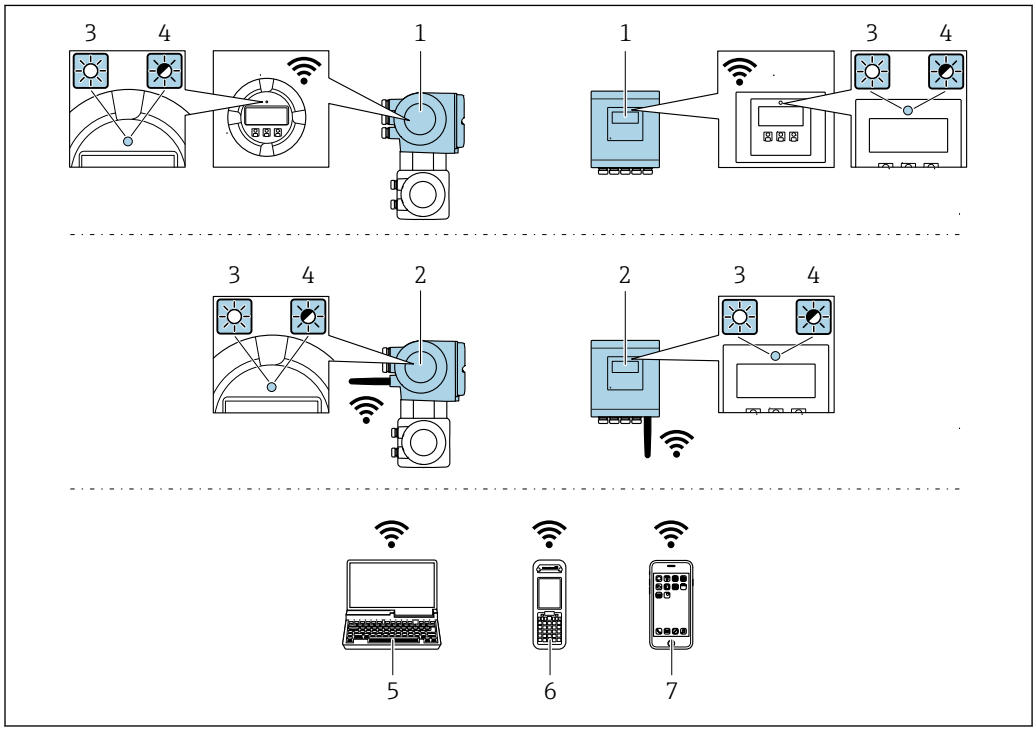

A0034569

1 *Transmitter with integrated WLAN antenna*
2 *Transmitter with external WLAN antenna*
3 *LED lit constantly: WLAN reception is enabled on measuring device*
4 *LED flashing: WLAN connection established between operating unit and measuring device*
5 *Computer with WLAN interface and Web browser (e.g. Microsoft Internet Explorer, Microsoft Edge) for accessing the integrated device Web server or with operating tool (e.g. FieldCare, DeviceCare)*
6 *Mobile handheld terminal with WLAN interface and Web browser (e.g. Microsoft Internet Explorer, Microsoft Edge) for accessing the integrated device Web server or operating tool (e.g. FieldCare, DeviceCare)*
7 *Smart phone or tablet (e.g. Field Xpert SMT70)*

Function	WLAN: IEEE 802.11 b/g (2.4 GHz) ▪ Access point with DHCP server (default setting) ▪ Network
Encryption	WPA2-PSK AES-128 (in accordance with IEEE 802.11i)
Configurable WLAN channels	1 to 11
Degree of protection	IP67
Available antennas	▪ Internal antenna ▪ External antenna (optional) In the event of poor transmission/reception conditions at the place of installation. Only one antenna active in each case!
Range	▪ Internal antenna: typically 10 m (32 ft) ▪ External antenna: typically 50 m (164 ft)
Materials (external antenna)	▪ Antenna: ASA plastic (acrylic ester-styrene-acrylonitrile) and nickel-plated brass ▪ Adapter: Stainless steel and nickel-plated brass ▪ Cable: Polyethylene ▪ Connector: Nickel-plated brass ▪ Angle bracket: Stainless steel

Configuring the Internet protocol of the mobile terminal

NOTICE

If the WLAN connection is lost during the configuration, settings made may be lost.

▶ Make sure that the WLAN connection is not disconnected while configuring the device.

NOTICE

In principle, avoid simultaneous access to the measuring device via the service interface (CDI-RJ45) and the WLAN interface from the same mobile terminal. This could cause a network conflict.

▶ Only activate one service interface (CDI-RJ45 service interface or WLAN interface).
▶ If simultaneous communication is necessary: configure different IP address ranges, e.g. 192.168.0.1 (WLAN interface) and 192.168.1.212 (CDI-RJ45 service interface).

Preparing the mobile terminal

▶ Enable WLAN reception on the mobile terminal.

Establishing a connection from the mobile terminal to the measuring device

1. In the WLAN settings of the mobile terminal:
   Select the measuring device using the SSID (e.g. EH_Promass_500_A802000).
2. If necessary, select the WPA2 encryption method.
3. Enter the password: serial number of the measuring device ex-works (e.g. L100A802000).
   ↳ LED on display module flashes: it is now possible to operate the measuring device with the Web browser, FieldCare or DeviceCare.

The serial number can be found on the nameplate.

To ensure the safe and swift assignment of the WLAN network to the measuring point, it is advisable to change the SSID name. It should be possible to clearly assign the new SSID name to the measuring point (e.g. tag name) because it is displayed as the WLAN network.

Disconnecting

- After configuring the device:
  Terminate the WLAN connection between the operating unit and measuring device.

8.5.2 FieldCare

Function scope

FDT-based plant asset management tool from Endress+Hauser. It can configure all smart field devices in a system and helps you manage them. By using the status information, it is also a simple but effective way of checking their status and condition.

Access is via:
- CDI-RJ45 service interface → 📄 89
- WLAN interface→ 📄 90

Typical functions:
- Configuring parameters of transmitters
- Loading and saving device data (upload/download)
- Documentation of the measuring point
- Visualization of the measured value memory (line recorder) and event logbook

For additional information about FieldCare, see Operating Instructions BA00027S and BA00059S

Source for device description files

See information → 📄 94

Establishing a connection

1. Start FieldCare and launch the project.
2. In the network: Add a device.
   ↳ The **Add device** window opens.
3. Select the **CDI Communication TCP/IP** option from the list and press **OK** to confirm.
4. Right-click **CDI Communication TCP/IP** and select the **Add device** option in the context menu that opens.
5. Select the desired device from the list and press **OK** to confirm.
   ↳ The **CDI Communication TCP/IP (Configuration)** window opens.
6. Enter the device address in the **IP address** field: 192.168.1.212 and press **Enter** to confirm.
7. Establish the online connection to the device.

For additional information, see Operating Instructions BA00027S and BA00059S

User interface

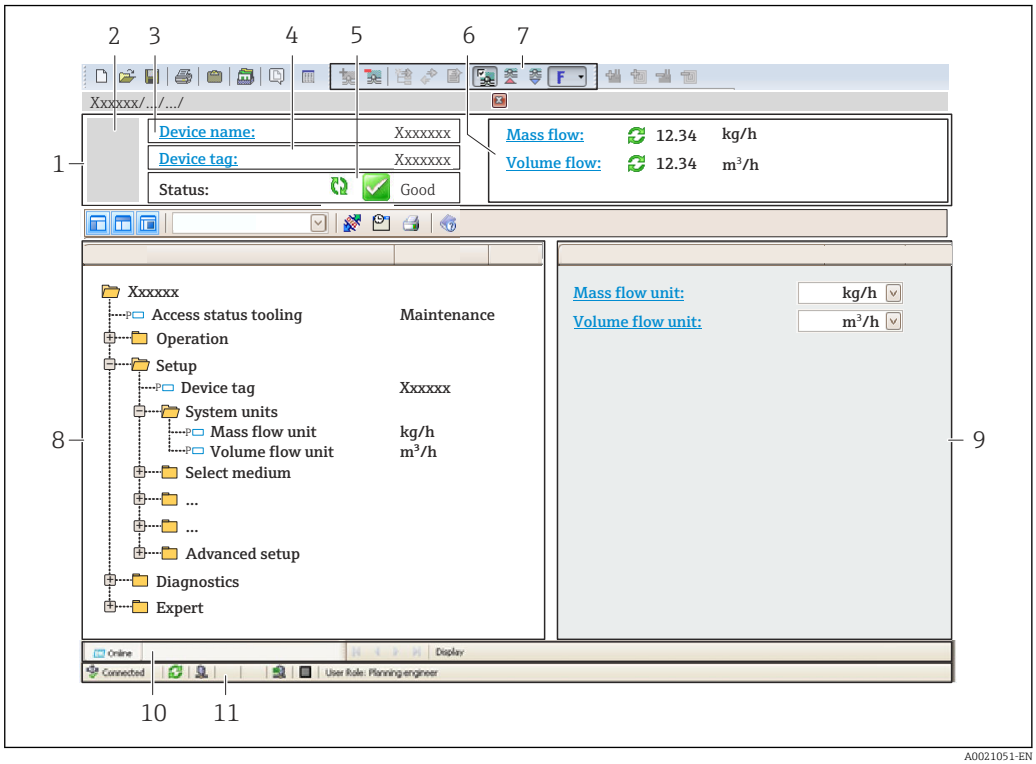

A0021051-EN

1 *Header*
2 *Picture of device*
3 *Device name*
4 *Device tag*
5 *Status area with status signal*→ 📄 *189*
6 *Display area for current measured values*
7 *Edit toolbar with additional functions such as save/restore, event list and create documentation*
8 *Navigation area with operating menu structure*
9 *Working area*
10 *Range of action*
11 *Status area*

8.5.3 DeviceCare

Function scope

Tool to connect and configure Endress+Hauser field devices.

The fastest way to configure Endress+Hauser field devices is with the dedicated "DeviceCare" tool. Together with the device type managers (DTMs) it presents a convenient, comprehensive solution.

For details, see Innovation Brochure IN01047S

Source for device description files

See information → 📄 94

9 System integration

9.1 Overview of device description files

9.1.1 Current version data for the device

Firmware version	01.00.zz	▪ On the title page of the Operating Instructions ▪ On the transmitter nameplate ▪ Firmware version Diagnostics → Device information → Firmware version
Release date of firmware version	10.2017	---
Manufacturer ID	0x11	Manufacturer ID Diagnostics → Device information → Manufacturer ID
Device type ID	0x103B	Device type Diagnostics → Device information → Device type
Device revision	▪ Major revision 1 ▪ Minor revision 1	▪ On the transmitter nameplate ▪ Device revision Diagnostics → Device information → Device revision
Device profile	Generic device (product type: 0x2B)	

For an overview of the different firmware versions for the device → 📖 211

9.1.2 Operating tools

The suitable device description file for the individual operating tools is listed in the table below, along with information on where the file can be acquired.

Operating tool via Service interface (CDI)	Sources for obtaining device descriptions
FieldCare	▪ www.endress.com → Download Area ▪ CD-ROM (contact Endress+Hauser) ▪ DVD (contact Endress+Hauser)
DeviceCare	▪ www.endress.com → Download Area ▪ CD-ROM (contact Endress+Hauser) ▪ DVD (contact Endress+Hauser)

9.2 Overview of system files

System files	Version	Description	How to acquire
Electronic Data Sheet (EDS system file)	2.1	Certified in accordance with the following ODVA guidelines: ▪ Conformance test ▪ Performance test ▪ PlugFest Embedded EDS Support (File Object 0x37)	▪ www.endress.com → Download-Area ▪ EDS system file integrated in the device: can be downloaded via the Web browser
Add-on Profile Level 3	▪ Major revision 1 ▪ Minor revision 1	System file for "Studio 5000" software (Rockwell Automation)	www.endress.com → Download-Area

9.3 Integrating the measuring device in the system

A detailed description of how to integrate the device into an automation system (e.g. from Rockwell Automation) is available as a separate document: www.endress.com → Select country → Automation → Digital communication → Fieldbus device integration → EtherNet/IP

Protocol-specific data → 227.

9.4 Cyclic data transmission

Cyclic data transmission when using the device master file (GSD).

9.4.1 Block model

The block model shows which input and output data the measuring device makes available for implicit messaging. Cyclical data exchange is performed using an EtherNet/IP scanner, e.g. a distributed control system etc.

Measuring device					Control system
Transducer Block	Input Assembly Fix (Assem100) 44 byte	→ 97	Permanently assigned input group	→	EtherNet/IP
	Mass flow fixed input assembly (Assem106) 32 byte	→ 98	Permanently assigned input group	→	
	Volume flow fixed input assembly (Assem107) 62 byte	→ 98	Permanently assigned input group	→	
	Concentration fixed input assembly [1] (Assem109) 66 byte	→ 98	Permanently assigned input group	→	
	API Referenced corrections fixed input assembly [2] (Assem110) 64 byte	→ 99	Permanently assigned input group	→	
	Water cut % fixed input assembly [2] (Assem111) 80 byte	→ 99	Permanently assigned input group	→	
	Heartbeat monitoring fixed input assembly [3] (Assem112) 96 byte	→ 99	Permanently assigned input group	→	
	Input assembly custom (Assem101) 88 byte	→ 100	Configurable input group	→	
	Output assembly fix (Assem102) 54 byte	→ 101	Permanently assigned output group	←	
	Config assembly (Assem104) 2709 byte	→ 103	Permanently assigned configuration	→	

1) Only available with the Concentration application package.
2) Only available with the Petroleum application package.
3) Only available with the Heartbeat Verification application package.

9.4.2 Input and output groups

Possible configurations

Configuration 1: Exclusive Owner Multicast

Input Assembly Fix		Instance	Size (byte)	Min. RPI (ms)
Input Assembly Configurable	Configuration	0 x 64	398	–
Output Assembly Fix	O → T Configuration	0 x 66	64	5
Input Assembly Fix	T → O Configuration	0 x 64	44	5

Configuration 2: Input Only Multicast

Input Assembly Fix		Instance	Size (byte)	Min. RPI (ms)
Input Assembly Configurable	Configuration	0 x 68	398	–
Output Assembly Fix	O → T Configuration	0 x C7	–	–
Input Assembly Fix	T → O Configuration	0 x 64	44	5

Configuration 3: Exclusive Owner Multicast

Input Assembly Configurable		Instance	Size (byte)	Min. RPI (ms)
Input Assembly Configurable	Configuration	0 x 68	398	–
Output Assembly Fix	O → T Configuration	0 x 66	64	5
Input Assembly Fix	T → O Configuration	0 x 65	88	5

Configuration 4: Input Only Multicast

Input Assembly Configurable		Instance	Size (byte)	Min. RPI (ms)
Input Assembly Configurable	Configuration	0 x 68	398	–
Output Assembly Fix	O → T Configuration	0 x C7	–	–
Input Assembly Fix	T → O Configuration	0 x 64	88	5

Configuration 5: Exclusive Owner Multicast

Input Assembly Fix		Instance	Size (byte)	Min. RPI (ms)
Input Assembly Configurable	Configuration	0 x 69	–	–
Output Assembly Fix	O → T Configuration	0 x 66	64	5
Input Assembly Fix	T → O Configuration	0 x 64	44	5

Configuration 6: Input Only Multicast

Input Assembly Fix		Instance	Size (byte)	Min. RPI (ms)
Input Assembly Configurable	Configuration	0 x 69	–	–
Output Assembly Fix	O → T Configuration	0 x C7	–	–
Input Assembly Fix	T → O Configuration	0 x 65	44	5

Configuration 7: Exclusive Owner Multicast

Input Assembly Configurable		Instance	Size (byte)	Min. RPI (ms)
Input Assembly Configurable	Configuration	0 x 69	–	–
Output Assembly Fix	O → T Configuration	0 x 66	64	5
Input Assembly Fix	T → O Configuration	0 x 64	88	5

Configuration 8: Input Only Multicast

Input Assembly Configurable		Instance	Size (byte)	Min. RPI (ms)
Input Assembly Configurable	Configuration	0 x 69	–	–
Output Assembly Fix	O → T Configuration	0 x C7	–	–
Input Assembly Fix	T → O Configuration	0 x 65	88	5

Possible connections

No.	#1	#2	#3	#4	#5	#6	#7	#8	#9
Number of connections	**1**	**1**	**1**	**1**	**1**	**1**	**1**	**1**	**1**
Input assembly fixed (Assem100)	X								
Mass flow fixed input assembly (Assem106)		X							
Volume flow fixed input assembly (Assem107)			X						
Input assembly custom (Assem101)				X					
Viscosity fixed input assembly (Assem108)					X				
Concentration fixed input assembly (Assem109)						X			
API Referenced corrections fixed input assembly (Assem110)							X		
Water cut % fixed input assembly (Assem111)								X	
Heartbeat monitoring fixed input assembly (Assem112)									X

Permanently assigned input group

Input assembly fixed (Assem100), 44 byte

Description		Byte
1.	File header (not visible)	1-4
2.	Current diagnosis [1)]	5-8
3.	Mass flow	9-12
4.	Volume flow	13-16
5.	Corrected volume flow	17-20
6.	Temperature	21-24
7.	Density	25-28
8.	Reference density	29-32
9.	Totalizer 1	33-36

Description	Byte
10. Totalizer 2	37-40
11. Totalizer 3	41-44

1) Diagnostic information via EtherNet/IP → 🗎 106

Mass flow fixed input assembly (Assem106), 32 byte

Description	Byte
1. File header (not visible)	1-4
2. Current diagnosis [1)]	5-8
3. Mass flow	9-12
4. Density	13-16
5. Temperature	17-20
6. Totalizer 1	21-24
7. Mass flow unit	25-26
8. Density unit	27-28
9. Temperature unit	29-30
10. Totalizer 1 unit	31-32

1) Diagnostic information via EtherNet/IP → 🗎 106

Volume flow fixed input assembly (Assem107), 62 byte

Description	Byte
1. Mass flow fixed input assembly	1-32
2. Volume flow	33-36
3. Corrected volume flow	37-40
4. Reference density	41-44
5. Totalizer 2	45-48
6. Totalizer 3	49-52
7. Volume flow unit	53-54
8. Corrected volume flow unit	55-56
9. Reference density unit	57-58
10. Totalizer 2 unit	59-60
11. Totalizer 3 unit	61-62

Concentration fixed input assembly (Assem109), 66 byte [1)]

Description	Byte
1. Mass flow fixed input assembly	1-32
2. Target mass flow	33-36
3. Carrier mass flow	37-40
4. Target volume flow	41-44
5. Carrier volume flow	45-48
6. Target corrected volume flow	49-52
7. Carrier corrected volume flow	53-56

Description	Byte
8. Concentration	57-60
9. Volume flow unit	61-62
10. Corrected volume flow unit	63-64
11. Concentration unit	65-66

1) Only available with the Concentration application package.

API Referenced corrections fixed input assembly (Assem110), 60 byte [1)]

Description	Byte
1. Mass flow fixed input assembly	1-32
2. Alternative reference density	33-36
3. GSV flow	37-40
4. Alternative GSV flow	41-44
5. NSV flow	45-48
6. Alternative NSV flow	49-52
7. S&W volume flow	53-56
8. Volume flow unit	57-58
9. Reference density unit	59-60

1) Only available with the Petroleum application package.

Water cut % fixed input assembly (Assem111), 76 byte [1)]

Description	Byte
1. Mass flow fixed input assembly	1-32
2. Oil density	33-36
3. Water density	37-40
4. Water cut %	41-44
5. Oil mass flow	45-48
6. Water mass flow	49-52
7. Oil volume flow	53-56
8. Water volume flow	57-60
9. Oil corrected volume flow	61-64
10. Water corrected volume flow	65-68
11. Volume flow unit	69-70
12. Corrected volume flow unit	71-72
13. Oil density unit	73-74
14. Water density unit	75-76

1) Only available with the Petroleum application package

Heartbeat monitoring fixed input assembly (Assem112), 100 byte [1)]

Description	Byte
1. Mass flow fixed input assembly	1-32
2. Signal asymmetry	33-36

Description	Byte
3. Oscillation frequency 0	37-40
4. Oscillation frequency 1	41-44
5. Oscillation amplitude 0	45-48
6. Oscillation amplitude 1	49-52
7. Oscillation damping 0	53-56
8. Oscillation damping 1	57-60
9. Tube damping fluctuation 0	61-64
10. Tube damping fluctuation 1	65-68
11. Exciter current 0	69-72
12. Exciter current 1	73-76
13. HBSI	77-80
14. Frequency fluctuation 0	81-84
15. Frequency fluctuation 1	85-88
16. Electronic temperature	89-92
17. Carrier pipe temperature	93-96
18. Verification status	97-98
19. Verification results	99-100

1) Only available with the Heartbeat Verification application package.

Configurable input group

Input assembly custom (Assem101), 88 byte

Description	Format
1. - 10. Input values 1 to 10	Real
11. - 20. Input values 11 to 20	Double integer

Possible input values

Possible input values 1 to 10:		
▪ Off ▪ Mass flow ▪ Volume flow ▪ Corrected volume flow ▪ Target mass flow [1] ▪ Carrier mass flow [1] ▪ Target volume flow [1] ▪ Carrier volume flow [1] ▪ Target corrected volume flow [1] ▪ Carrier corrected volume flow [1] ▪ Density ▪ Reference density ▪ Concentration [1]	▪ Temperature ▪ Carrier tube temperature [2] ▪ Electronic temperature ▪ Oscillation frequency 0 ▪ Oscillation frequency 1 [2] ▪ Oscillation amplitude 0 ▪ Oscillation amplitude 1 [2] ▪ Frequency fluctuation 0 ▪ Frequency fluctuation 1 [2] ▪ Oscillation damping 0 ▪ Oscillation damping 1 ▪ Tube damping fluctuation 0 ▪ Tube damping fluctuation 1 ▪ Signal asymmetry	▪ Exciter current 0 ▪ Exciter current 1 [2] ▪ Monitoring of exciter current 0 ▪ Monitoring of exciter current 1 [2] ▪ HBSI [2] ▪ Totalizer 1 ▪ Totalizer 2 ▪ Totalizer 3 ▪ Alternative reference density [3] ▪ GSV flow [3] ▪ Alternative GSV flow [3] ▪ NSV flow [3] ▪ Alternative NSV flow [3] ▪ S&W volume flow [3]

1) Only available with the Concentration application package.
2) Only available with the Heartbeat Verification application package.
3) Only available with the Petroleum application package.

Possible input values 11 to 20:		
▪ Off ▪ Actual diagnostics ▪ Previous diagnosis ▪ Mass flow unit ▪ Volume flow unit ▪ Corrected volume flow unit	▪ Temperature unit ▪ Density unit ▪ Reference density unit ▪ Concentration unit ▪ Current unit	▪ Totalizer 1 unit ▪ Totalizer 2 unit ▪ Totalizer 3 unit ▪ Verification results ▪ Verification status ▪ Status zero point adjustment

Permanently assigned output group

Output assembly fix (Assem102), 54 byte

Description (format)	Byte	Bit	Value
1. Totalizer 1	1	0	▪ 0: Enable ▪ 1: Disable
2. Totalizer 2		1	
3. Totalizer 3		2	
4. Verification		3	
5. Concentration of medium type		4	
6. Compensation, pressure		5	
7. Reference density compensation		6	
8. Compensation, temperature		7	
9. S&W correction value %	2	0	▪ 0: Enable ▪ 1: Disable
10. Water cut %		1	
11. Flow override		2	
12. Zero point adjustment		3	
13. Not used		4	
14. Not used		5	
15. Not used		6	
16. Not used		7	
17. Not used	3-4	16	–
18. Control totalizer 1 (integer)	5-6	16	▪ 32226 (0): Add ▪ 32490 (1): Reset and stop ▪ 32228 (2): Default value and stop ▪ 198 (3): Reset and add ▪ 199 (4): Default value and add ▪ 32928 (3): Stop
19. Control totalizer 2 (integer)	7-8	16	
20. Control totalizer 3 (integer)	9-10	16	
21. Start verification (integer)	11-12	16	▪ 32823 (0): Cancel ▪ 33158 (1): Start

Description (format)	Byte	Bit	Value
22. Select concentration of medium type	13-14	16	▪ 3062 (0) : Aqueous Fructose ▪ 3063 (0) : Aqueous Glucose ▪ 3068 (0) : Aqueous Hydrochloric Acid ▪ 3077 (0) : Aqueous Hydrogen Peroxide ▪ 3065 (0) : Aqueous Sucrose ▪ 3064 (0) : Aqueous Invert Sugar ▪ 3069 (0) : Aqueous Nitric Acid ▪ 3070 (0) : Aqueous Phosphoric Acid ▪ 3075 (0) : Aqueous Potassium Hydroxide ▪ 3071 (0) : Aqueous Sodium Hydroxide ▪ 3060 (0) : Ethanol Water ▪ 3061 (0) : Methanol Water ▪ 3066 (0) : Ammonium Nitrate In Water ▪ 3067 (0) : Ferric Chloride In Water ▪ 3073 (0) : High Fructose Corn Syrup 42 ▪ 3074 (0) : High Fructose Corn Syrup 55 ▪ 3072 (0) : High Fructose Corn Syrup 90 ▪ 3092 (0) : Percent Volume / Percent Mass ▪ 3081 (0) : Wort ▪ 3082 (0) : Coef Set 1 ▪ 3083 (0) : Coef Set 2 ▪ 3084 (0) : Coef Set 3
23. Not used	15-16	16	–
24. External pressure (real)	17-20	32	Data format: Byte 1-4: External pressure Floating-point number (IEEE754)
25. External pressure unit (integer)	21-22	16	▪ 1610 (11): Pa a ▪ 1616 (12): kPa a ▪ 1614 (237): MPa a ▪ 1137 (7): bar ▪ 1611 (240): Pa g ▪ 1617 (240): kPa a ▪ 1615 (240): MPa a ▪ 32797 (7): bar g ▪ 1142 (6): psi a ▪ 1143 (240): psi g
26. Not used	23-24	16	–
27. External reference density (real)	25-28	32	Data format: Byte 1-4: External ref. density Floating-point number (IEEE754)
28. External reference density unit (integer)	29-30	16	▪ 32840 (240): kg/Nm^3 ▪ 32841 (240): kg/Nl ▪ 32842 (240): g/Scm^3 ▪ 32843 (240): kg/Scm^3 ▪ 32844 (240): lb/Sft^3
29. Not used	31-32	16	–
30. External temperature (real)	33-36	32	Data format: Byte 1-4: External temperature Floating-point number (IEEE754)
31. External temperature unit (integer)	37-38	16	▪ 1001 (32): °C ▪ 1002 (33): °F ▪ 1000 (35): K ▪ 1003 (34): °R
32. Not used	39-40	16	–

Description (format)	Byte	Bit	Value
33. External value % S&W (real)	41-44	32	Data format: Byte 1-4: External value, % S&W Floating-point number (IEEE754)
34. External value, water cut % (real)	45-48	32	Data format: Byte 1-4: External value, water cut % Floating-point number (IEEE754)
35 Flow override monitoring	49-50	16	▪ 33004 (0): Off ▪ 33006 (1): On
36 Zero point adjustment monitoring	51-52	16	▪ 32823 (0): Cancel ▪ 33242 (0): Active ▪ 248 (0): Error zero point adjustment ▪ 33158 (1): Start

Permanently assigned configuration group

Config assembly (Assem104), 2704 byte

Description (format)				Bits	Byte	Offset
1.	None			32	4	0
2.	Parameter 36	–	Write protection	8	1	4
3.	None			8	1	5
4.	Parameter 87	System units	Mass flow unit	16	2	6
5.	Parameter 86	System units	Mass unit	16	2	8
6.	Parameter 93	System units	Volume flow unit	16	2	10
7.	Parameter 92	System units	Volume unit	16	2	12
8.	Parameter 80	System units	Corrected volume flow unit	16	2	14
9.	Parameter 79	System units	Corrected volume unit	16	2	16
10.	Parameter 81	System units	Density unit	16	2	18
11.	Parameter 89	System units	Reference density unit	16	2	20
12.	Parameter 91	System units	Temperature unit	16	2	22
13.	None			16	2	24
14.	Parameter 88	System units	Press. eng. unit	16	2	26
15.	Parameter 85	System units	Kinematic viscosity unit	16	2	28
16.	Parameter 84	System units	Dynamic viscosity unit	16	2	30
17.	Parameter 78	System units	Concentration unit	16	2	32
18.	Parameter 82	System units	Oil density unit	16	2	34
19.	Parameter 83	System units	Water density unit	16	2	36
20.	Parameter 90	System units	Water reference density unit	16	2	38
21.	None			32	4	40
22.	None			16	2	44
23.	Parameter 224	–	Enter access code	16	2	46
24.	Parameter 94	Totalizer 1	Assign process variable	16	2	48
25.	Parameter 106	Totalizer 1	Unit totalizer	16	2	50
26.	Parameter 103	Totalizer 1	Totalizer operation mode	16	2	52
27.	Parameter 100	Totalizer 1	Failure mode	16	2	54
28.	Parameter 244	Totalizer operation	Preset value tot. 1	32	4	56
29.	Parameter 97	Totalizer operation	Control totalizer 1	16	2	60

Description (format)				Bits	Byte	Offset
30.	Parameter 95	Totalizer 2	Assign process variable	16	2	62
31.	Parameter 107	Totalizer 2	Unit totalizer	16	2	64
32.	Parameter 104	Totalizer 2	Totalizer operation mode	16	2	66
33.	Parameter 101	Totalizer 2	Failure mode	16	2	68
34.	Parameter 98	Totalizer operation	Control totalizer 2	16	2	70
35.	Parameter 245	Totalizer operation	Preset value tot. 2	32	4	72
36.	Parameter 96	Totalizer 3	Assign process variable	16	2	76
37.	Parameter 108	Totalizer 3	Unit totalizer	16	2	78
38.	Parameter 105	Totalizer 3	Totalizer operation mode	16	2	80
39.	Parameter 102	Totalizer 3	Failure mode	16	2	82
40.	Parameter 246	Totalizer operation	Preset value tot. 3	32	4	84
41.	Parameter 99	Totalizer operation	Control totalizer 3	16	2	88
42.	Parameter 16	Configurable input assembly	Input assembly position 1	16	2	90
43.	Parameter 27	Configurable input assembly	Input assembly position 2	16	2	92
44.	Parameter 29	Configurable input assembly	Input assembly position 3	16	2	94
45.	Parameter 30	Configurable input assembly	Input assembly position 4	16	2	96
46.	Parameter 31	Configurable input assembly	Input assembly position 5	16	2	98
47.	Parameter 32	Configurable input assembly	Input assembly position 6	16	2	100
48.	Parameter 33	Configurable input assembly	Input assembly position 7	16	2	102
49.	Parameter 34	Configurable input assembly	Input assembly position 8	16	2	104
50.	Parameter 35	Configurable input assembly	Input assembly position 9	16	2	106
51.	Parameter 17	Configurable input assembly	Input assembly position 10	16	2	108
52.	Parameter 18	Configurable input assembly	Input assembly position 11	16	2	110
53.	Parameter 19	Configurable input assembly	Input assembly position 12	16	2	112
54.	Parameter 20	Configurable input assembly	Input assembly position 13	16	2	114
55.	Parameter 21	Configurable input assembly	Input assembly position 14	16	2	116
56.	Parameter 22	Configurable input assembly	Input assembly position 15	16	2	118
57.	Parameter 23	Configurable input assembly	Input assembly position 16	16	2	120
58.	Parameter 24	Configurable input assembly	Input assembly position 17	16	2	122
59.	Parameter 25	Configurable input assembly	Input assembly position 18	16	2	124
60.	Parameter 26	Configurable input assembly	Input assembly position 19	16	2	126
61.	Parameter 28	Configurable input assembly	Input assembly position 20	16	2	128
62.	Parameter 38	Sensor adjustment	Flow direction	16	2	130
63.	Parameter 40	Process parameter	Flow override	16	2	132
64.	Parameter 37	Low flow cut off	Assign process variable	16	2	134
65.	Parameter 39	Empty pipe detection	Assign process variable	16	2	136
66.	Parameter 41	Corrected volume flow calculation	Corrected volume flow calculation	16	2	138
67.	Parameter 188	Low flow cut off	On value low flow cut off	32	4	140
68.	Parameter 187	Low flow cut off	Off value low flow cutoff	32	4	144
69.	Parameter 209	Low flow cut off	Pressure shock suppression	32	4	148
70.	Parameter 191	Empty pipe detection	Low value partial filled pipe detection	32	4	152
71.	Parameter 189	Partially filled pipe detection	High value partial filled pipe detection	32	4	156
72.	Parameter 190	Empty pipe detection	Response time part. filled pipe detect.	32	4	160

Description (format)				Bits	Byte	Offset
73.	Parameter 182	Corrected volume flow calculation	Fixed reference density	32	4	164
74.	Parameter 186	Corrected volume flow calculation	Linear expansion coefficient	32	4	168
75.	Parameter 211	Corrected volume flow calculation	Square expansion coefficient	32	4	172
76.	Parameter 210	Corrected volume flow calculation	Reference temperature	32	4	176
77.	Parameter 183	Process parameter	Flow damping	32	4	180
78.	Parameter 184	Process parameter	Density damping	32	4	184
79.	Parameter 185	Process parameter	Temperature damping	32	4	188
80.	Parameter 5	External compensation	Pressure compensation	16	2	192
81.	Parameter 6	External compensation	Temperature mode	16	2	194
82.	Parameter 2	Medium selection	Select medium	16	2	196
83.	Parameter 3	Medium selection	Select gas type	16	2	198
84.	Parameter 119	External compensation	Pressure value	32	4	200
85.	Parameter 133	Medium selection	Temperature coefficient sound velocity	32	4	204
86.	Parameter 128	Medium selection	Reference sound velocity	32	4	208
87.	Parameter 115	Empty pipe detection	Max. damping empty pipe detection	32	4	212
88.	Parameter 241	Diagnostic settings	Alarm delay	32	4	216
89.	Parameter 58	Diagnostic behavior	Assign behavior for diagnostic information 046	8	1	220
90.	Parameter 57	Diagnostic behavior	Assign behavior for diagnostic information 140	8	1	221
91.	Parameter 59	Diagnostic behavior	Assign behavior for diagnostic information 144	8	1	222
92.	Parameter 60	Diagnostic behavior	Assign behavior for diagnostic information 374	8	1	223
93.	Parameter 61	Diagnostic behavior	Assign behavior for diagnostic information 302	8	1	224
94.	None			8	1	225
95.	Parameter 74	Diagnostic behavior	Assign behavior for diagnostic information 441	16	2	226
96.	Parameter 75	Diagnostic behavior	Assign behavior for diagnostic information 442	16	2	228
97.	Parameter 76	Diagnostic behavior	Assign behavior for diagnostic information 443	16	2	230
98.	Parameter 73	Diagnostic behavior	Assign behavior for diagnostic information 444	16	2	232
99.	Parameter 62	Diagnostic behavior	Assign behavior for diagnostic information 830	8	1	234
100.	Parameter 63	Diagnostic behavior	Assign behavior for diagnostic information 831	8	1	235
101.	Parameter 64	Diagnostic behavior	Assign behavior for diagnostic information 832	8	1	236
102.	Parameter 65	Diagnostic behavior	Assign behavior for diagnostic information 833	8	1	237
103.	Parameter 66	Diagnostic behavior	Assign behavior for diagnostic information 834	8	1	238
104.	Parameter 67	Diagnostic behavior	Assign behavior for diagnostic information 835	8	1	239
105.	Parameter 72	Diagnostic behavior	Assign behavior for diagnostic information 862	16	2	240

Description (format)				Bits	Byte	Offset
106.	Parameter 68	Diagnostic behavior	Assign behavior for diagnostic information 912	8	1	242
107.	Parameter 69	Diagnostic behavior	Assign behavior for diagnostic information 913	8	1	243
108.	Parameter 70	Diagnostic behavior	Assign behavior for diagnostic information 944	8	1	244
109.	Parameter 71	Diagnostic behavior	Assign behavior for diagnostic information 948	8	1	245
110.	None			32	4	246
111.	None			16	2	250
112.	Parameter 12	Concentration	Liquid type	16	2	252
113.	None			32	4	254
114.	None			16	2	258
115.	Parameter 138	Concentration	Coefficient A0	32	4	260
116.	Parameter 141	Concentration	Coefficient A1	32	4	264
117.	Parameter 144	Concentration	Coefficient A2	32	4	268
118.	Parameter 147	Concentration	Coefficient A3	32	4	272
119.	Parameter 150	Concentration	Coefficient A4	32	4	276
120.	Parameter 153	Concentration	Coefficient B1	32	4	280
121.	Parameter 156	Concentration	Coefficient B2	32	4	284
122.	Parameter 159	Concentration	Coefficient B3	32	4	288
123.	Parameter 162	Concentration	Coefficient D1	32	4	292
124.	Parameter 165	Concentration	Coefficient D2	32	4	296
125.	Parameter 168	Concentration	Coefficient D3	32	4	300
126.	Parameter 171	Concentration	Coefficient D4	32	4	304
127.	Parameter 55		Petroleum mode	16	2	308
128.	Parameter 53		API product group	16	2	310
129.	Parameter 54		API table selection	16	2	312
130.	None			16	2	314
131.	Parameter 237		Thermal expansion coefficient	32	4	316
132.	Parameter 220		Oil density sample	32	4	320
133.	Parameter 235		Oil temperature sample	32	4	324
134	Parameter 230		Oil pressure sample	32	4	328
135	Parameter 222		Water density sample	32	4	332
136	Parameter 236		Water temperature sample	32	4	336

9.5 Diagnostic information via EtherNet/IP

Status signal	No.	Short text	Value
	000	–	0
F	882	Input signal	16777265
F	910	Tubes not oscillating	16777296
F	437	Configuration incompatible	16777312
F	242	Software incompatible	16777319

Status signal	No.	Short text	Value
F	252	Modules incompatible	16777323
F	272	Main electronic failure	16777337
F	270	Main electronic failure	16777340
F	271	Main electronic failure	16777341
F	270	Main electronic failure	16777343
F	270	Main electronic failure	16777344
F	825	Operating temperature	16777352
F	410	Data transfer	16777355
F	273	Main electronic failure	16777368
F	270	Main electronic failure	16777375
F	083	Memory content	16777376
F	270	Main electronic failure	16777377
F	022	Sensor temperature	16777406
F	022	Sensor temperature	16777407
F	833	Electronic temperature too low	16777409
F	832	Electronic temperature too high	16777411
F	834	Process temperature too high	16777413
F	835	Process temperature too low	16777414
F	270	Main electronic failure	16777428
F	022	Sensor temperature	16777429
F	022	Sensor temperature	16777430
F	062	Sensor connection	16777435
F	062	Sensor connection	16777436
F	311	Electronic failure	16777441
F	273	Main electronic failure	16777445
F	082	Data storage	16777447
F	190	Special event 2	16777450
F	273	Main electronic failure	16777483
F	390	Special event 3	16777490
F	062	Sensor connection	16777491
F	062	Sensor connection	16777492
F	992	Special event 13	16777503
F	590	Special event 4	16777508
F	990	Special event 5	16777509
F	991	Special event 9	16777510
F	591	Special event 8	16777511
F	391	Special event 7	16777512
F	191	Special event 6	16777513
F	262	Module connection	16777545
F	537	Configuration	16777546
F	201	Device failure	16777547
F	192	Special event 10	16777552
F	392	Special event 11	16777553

Status signal	No.	Short text	Value
F	592	Special event 12	16777554
F	382	Data storage	16777581
F	383	Memory content	16777582
F	283	Memory content	16777583
F	144	Measuring error too high	16777671
C	411	Up-/download active	33554536
C	411	Up-/download active	33554537
C	411	Up-/download active	33554540
C	484	Simulation failure mode	33554576
C	485	Simulation measured variable	33554579
C	453	Flow override	33554580
C	833	Electronic temperature too low	33554625
C	832	Electronic temperature too high	33554627
C	834	Process temperature too high	33554629
C	835	Process temperature too low	33554630
C	992	Special event 13	33554719
C	192	Special event 10	33554768
C	392	Special event 11	33554769
C	592	Special event 12	33554770
C	495	Simulation diagnostic event	33554782
C	302	Device verification active	33554926
M	438	Dataset	67108970
M	833	Electronic temperature too low	67109057
M	832	Electronic temperature too high	67109059
M	834	Process temperature too high	67109061
M	835	Process temperature too low	67109062
M	311	Electronic failure	67109090
M	992	Special event 13	67109151
M	192	Special event 10	67109200
M	392	Special event 11	67109201
M	592	Special event 12	67109202
S	825	Operating temperature	134217861
S	825	Operating temperature	134217863
S	842	Process limit	134217873
S	862	Partly filled pipe	134217874
S	830	Sensor temperature too high	134217920
S	833	Electronic temperature too low	134217921
S	831	Sensor temperature too low	134217922
S	832	Electronic temperature too high	134217923
S	912	Medium inhomogeneous	134217924
S	834	Process temperature too high	134217925
S	835	Process temperature too low	134217926
S	046	Sensor limit exceeded	134217928

Status signal	No.	Short text	Value
S	046	Sensor limit exceeded	134217930
S	140	Sensor signal	134217932
S	913	Medium unsuitable	134217933
S	274	Main electronic failure	134217934
S	274	Main electronic failure	134217935
S	912	Medium inhomogeneous	134217951
S	912	Inhomogeneous	134218005
S	992	Special event 13	134218015
S	843	Process limit	134218019
S	192	Special event 10	134218064
S	392	Special event 11	134218065
S	592	Special event 12	134218066
S	912	Inhomogeneous	134218082
S	948	Tube damping too high	134218088
S	944	Monitoring failed	134218182
I	1089	Power on	268435545
I	1090	Configuration reset	268435546
I	1091	Configuration changed	268435547
I	1110	Write protection switch changed	268435566
I	1111	Density adjust failure	268435567
I	1137	Electronic changed	268435593
I	1151	History reset	268435607
I	1155	Reset electronic temperature	268435611
I	1157	Memory error event list	268435613
I	1185	Display backup done	268435641
I	1186	Restore via display done	268435642
I	1187	Settings downloaded with display	268435643
I	1188	Display data cleared	268435644
I	1189	Backup compared	268435645
I	1209	Density adjustment ok	268435665
I	1221	Zero point adjust failure	268435677
I	1222	Zero point adjustment ok	268435678
I	1256	Display: access status changed	268435712
I	1264	Safety sequence aborted	268435720
I	1335	Firmware changed	268435791
I	1361	Wrong web server login	268435817
I	1397	Fieldbus: access status changed	268435853
I	1398	CDI: access status changed	268435854
I	1444	Device verification passed	268435900
I	1445	Device verification failed	268435901
I	1446	Device verification active	268435902
I	1447	Record application reference data	268435903
I	1448	Application reference data recorded	268435904

Status signal	No.	Short text	Value
I	1449	Recording application ref. data failed	268435905
I	1450	Monitoring off	268435906
I	1451	Monitoring on	268435907
I	1457	Failed: Measured error verification	268435913
I	1459	Failed: I/O module verification	268435915
I	1460	Failed: Sensor integrity verification	268435916
I	1461	Failed: Sensor verification	268435917
I	1462	Failed: Sensor electronic module verific.	268435918

10 Commissioning

10.1 Function check

Before commissioning the measuring device:

▶ Make sure that the post-installation and post-connection checks have been performed.

- "Post-installation check" checklist→ 📄 33
- "Post-connection check" checklist → 📄 65

10.2 Switching on the measuring device

▶ After a successful function check, switch on the measuring device.
↳ After a successful startup, the local display switches automatically from the startup display to the operational display.

ℹ If nothing appears on the local display or a diagnostic message is displayed, refer to the section on "Diagnostics and troubleshooting" → 📄 180.

10.3 Connecting via FieldCare

- For FieldCare → 📄 89 connection
- For connecting via FieldCare → 📄 92
- For the FieldCare → 📄 93 user interface

10.4 Setting the operating language

Factory setting: English or ordered local language

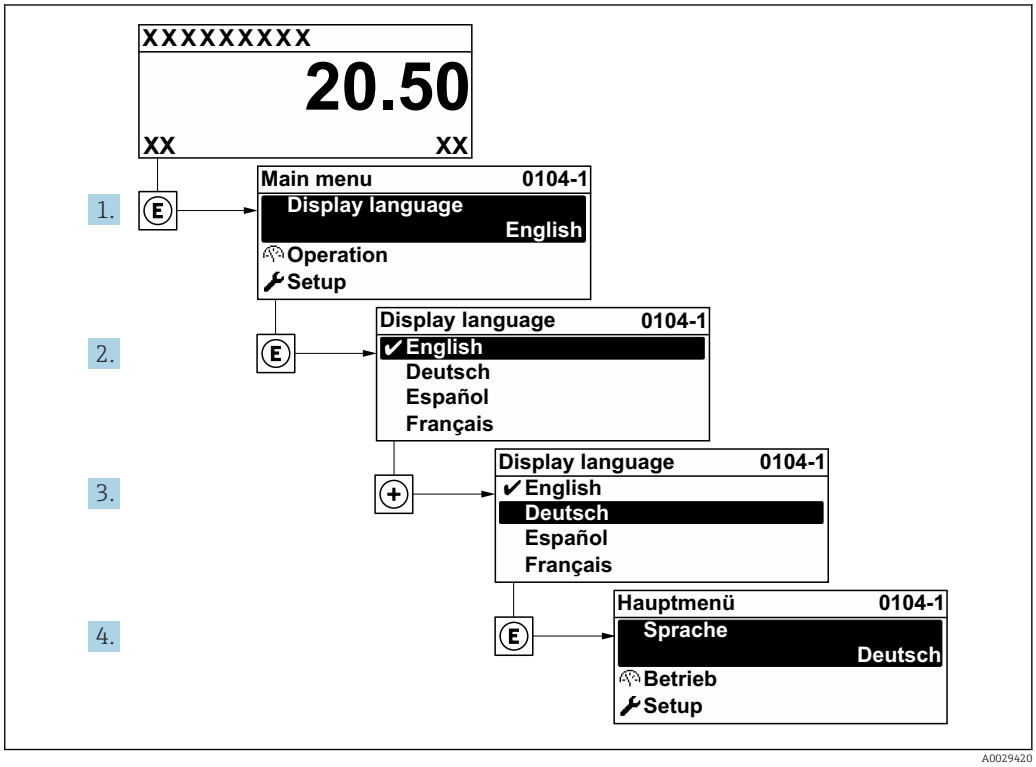

32 *Taking the example of the local display*

10.5 Configuring the measuring device

- The **Setup** menu with its guided wizards contains all the parameters needed for standard operation.
- Navigation to the **Setup** menu

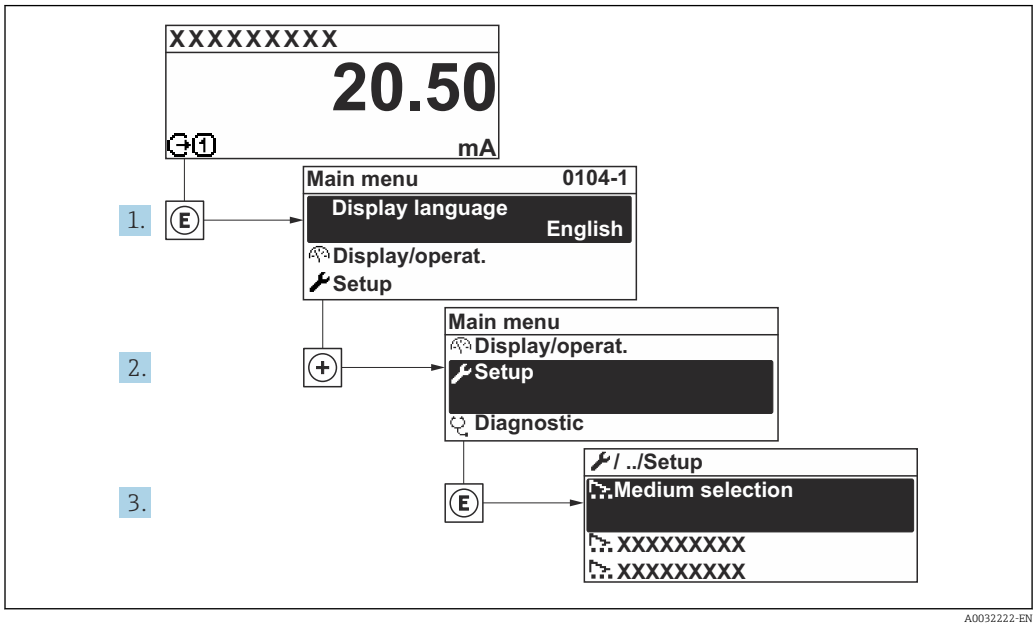

33 Taking the example of the local display

Depending on the device version, not all submenus and parameters are available in every device. The selection can vary depending on the order code.

Setup

Device tag	→ 113
▶ System units	→ 113
▶ Communication	→ 115
▶ Medium selection	→ 117
▶ I/O configuration	→ 119
▶ Current input 1 to n	→ 119
▶ Status input 1 to n	
▶ Current output 1 to n	→ 121
▶ Pulse/frequency/switch output 1 to n	→ 125
▶ Relay output 1 to n	→ 133

▶ Display	→ 📄 136
▶ Low flow cut off	→ 📄 142
▶ Partially filled pipe detection	→ 📄 143
▶ Advanced setup	→ 📄 144

10.5.1 Defining the tag name

To enable fast identification of the measuring point within the system, you can enter a unique designation using the **Device tag** parameter and thus change the factory setting.

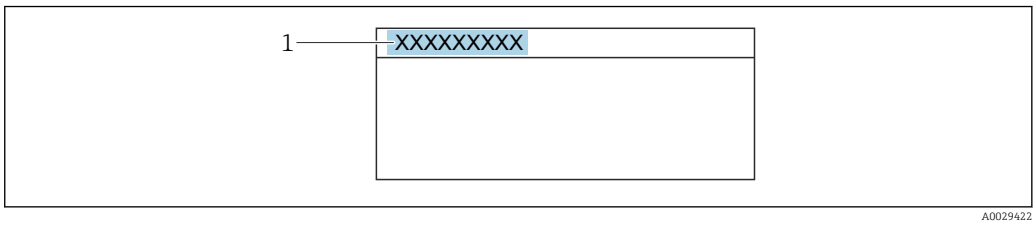

34 Header of the operational display with tag name

1 Tag name

Enter the tag name in the "FieldCare" operating tool → 📄 93

Navigation
"Setup" menu → Device tag

Parameter overview with brief description

Parameter	Description	User entry
Device tag	Enter the name for the measuring point.	Max. 32 characters, such as letters, numbers or special characters (e.g. @, %, /).

10.5.2 Setting the system units

In the **System units** submenu the units of all the measured values can be set.

Depending on the device version, not all submenus and parameters are available in every device. The selection can vary depending on the order code.

Navigation
"Setup" menu → System units

▶ System units	
Mass flow unit	→ 📄 114
Mass unit	→ 📄 114
Volume flow unit	→ 📄 114

Volume unit	→ 114
Corrected volume flow unit	→ 114
Corrected volume unit	→ 114
Density unit	→ 114
Reference density unit	→ 114
Temperature unit	→ 115
Pressure unit	→ 115

Parameter overview with brief description

Parameter	Description	Selection	Factory setting
Mass flow unit	Select mass flow unit. *Result* The selected unit applies for: ▪ Output ▪ Low flow cut off ▪ Simulation process variable	Unit choose list	Country-specific: ▪ kg/h ▪ lb/min
Mass unit	Select mass unit.	Unit choose list	Country-specific: ▪ kg ▪ lb
Volume flow unit	Select volume flow unit. *Result* The selected unit applies for: ▪ Output ▪ Low flow cut off ▪ Simulation process variable	Unit choose list	Country-specific: ▪ l/h ▪ gal/min (us)
Volume unit	Select volume unit.	Unit choose list	Country-specific: ▪ l (DN > 150 (6"): **m³** option) ▪ gal (us)
Corrected volume flow unit	Select corrected volume flow unit. *Result* The selected unit applies for: **Corrected volume flow** parameter (→ 170)	Unit choose list	Country-specific: ▪ Nl/h ▪ Sft³/min
Corrected volume unit	Select corrected volume unit.	Unit choose list	Country-specific: ▪ Nl ▪ Sft³
Density unit	Select density unit. *Result* The selected unit applies for: ▪ Output ▪ Simulation process variable ▪ Density adjustment (**Expert** menu)	Unit choose list	Country-specific: ▪ kg/l ▪ lb/ft³
Reference density unit	Select reference density unit.	Unit choose list	Country-dependent ▪ kg/Nl ▪ lb/Sft³

Parameter	Description	Selection	Factory setting
Temperature unit	Select temperature unit. *Result* The selected unit applies for: ▪ **Electronic temperature** parameter (6053) ▪ **Maximum value** parameter (6051) ▪ **Minimum value** parameter (6052) ▪ **External temperature** parameter (6080) ▪ **Maximum value** parameter (6108) ▪ **Minimum value** parameter (6109) ▪ **Carrier pipe temperature** parameter (6027) ▪ **Maximum value** parameter (6029) ▪ **Minimum value** parameter (6030) ▪ **Reference temperature** parameter (1816) ▪ **Temperature** parameter	Unit choose list	Country-specific: ▪ °C ▪ °F
Pressure unit	Select process pressure unit. *Result* The unit is taken from: ▪ **Pressure value** parameter (→ 🗎 118) ▪ **External pressure** parameter (→ 🗎 118) ▪ Pressure value	Unit choose list	Country-specific: ▪ bar a ▪ psi a

10.5.3 Configuring the communication interface

The **Communication** submenu guides you systematically through all the parameters that have to be configured for selecting and setting the communication interface.

Navigation
"Setup" menu → Communication

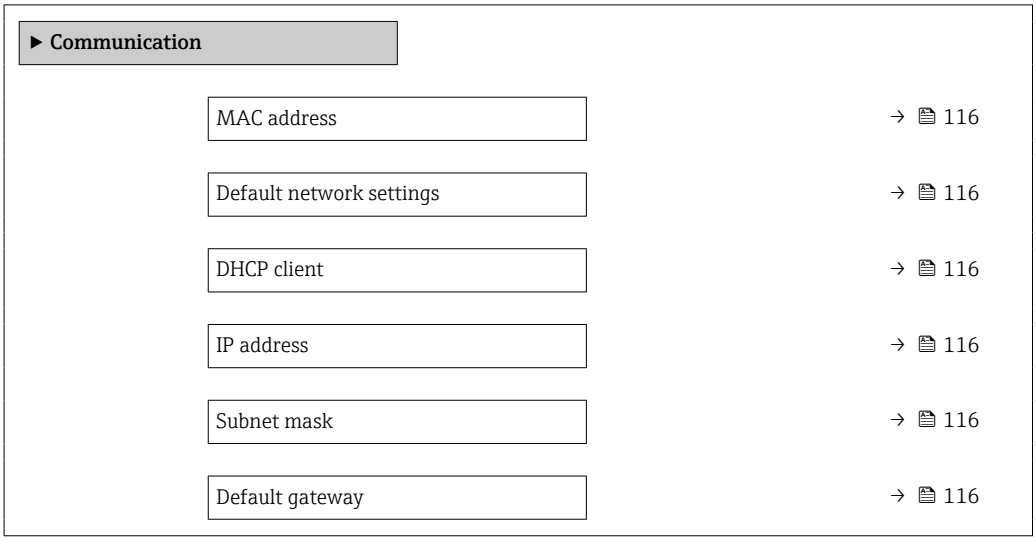

Parameter overview with brief description

Parameter	Description	User interface / Selection / User entry	Factory setting
MAC address	Displays the MAC address of the measuring device. MAC = Media Access Control	Unique 12-digit character string comprising letters and numbers, e.g.: 00:07:05:10:01:5F	Each measuring device is given an individual address.
Default network settings	Select whether to restore network settings.	▪ Off ▪ On	–
DHCP client	Select to activate/deactivate DHCP client functionality. **Result** If the DHCP client functionality of the Web server is activated, the IP address, Subnet mask and Default gateway are set automatically. Identification is via the MAC address of the measuring device.	▪ Off ▪ On	–
IP address	Displays the IP address of the Web server of the measuring device.	4 octet: 0 to 255 (in the particular octet)	–
Subnet mask	Displays the subnet mask.	4 octet: 0 to 255 (in the particular octet)	–
Default gateway	Displays the default gateway.	4 octet: 0 to 255 (in the particular octet)	–

10.5.4 Selecting and setting the medium

The **Select medium** wizard submenu contains parameters that must be configured in order to select and set the medium.

Navigation
"Setup" menu → Select medium

▶ **Medium selection**	
Select medium	→ 118
Select gas type	→ 118
Reference sound velocity	→ 118
Temperature coefficient sound velocity	→ 118
Pressure compensation	→ 118
Pressure value	→ 118
External pressure	→ 118

Parameter overview with brief description

Parameter	Prerequisite	Description	Selection / User entry / User interface	Factory setting
Select medium	–	Select medium type.	▪ Liquid ▪ Gas	–
Select gas type	The **Gas** option is selected in the **Select medium** parameter.	Select measured gas type.	▪ Air ▪ Ammonia NH3 ▪ Argon Ar ▪ Sulfur hexafluoride SF6 ▪ Oxygen O2 ▪ Ozone O3 ▪ Nitrogen oxide NOx ▪ Nitrogen N2 ▪ Nitrous oxide N2O ▪ Methane CH4 ▪ Hydrogen H2 ▪ Helium He ▪ Hydrogen chloride HCl ▪ Hydrogen sulfide H2S ▪ Ethylene C2H4 ▪ Carbon dioxide CO2 ▪ Carbon monoxide CO ▪ Chlorine Cl2 ▪ Butane C4H10 ▪ Propane C3H8 ▪ Propylene C3H6 ▪ Ethane C2H6 ▪ Others	–
Reference sound velocity	In the **Select gas type** parameter, the **Others** option is selected.	Enter sound velocity of gas at 0 °C (32 °F).	1 to 99 999.9999 m/s	–
Temperature coefficient sound velocity	The **Others** option is selected in the **Select gas type** parameter.	Enter temperature coefficient for the gas sound velocity.	Positive floating-point number	0 (m/s)/K
Pressure compensation	–	Select pressure compensation type.	▪ Off ▪ Fixed value ▪ External value ▪ Current input 1 * ▪ Current input 2 * ▪ Current input 3 *	–
Pressure value	The **Fixed value** option or the **Current input 1…n** option is selected in the **Pressure compensation** parameter.	Enter process pressure to be used for pressure correction.	Positive floating-point number	–
External pressure	The **Fixed value** option or the **Current input 1…n** option is selected in the **Pressure compensation** parameter.	Shows the external process pressure value.	Positive floating-point number	–
Multi-frequency activation	–	Switch the dual mode of the sensor on and off.	▪ No ▪ Yes	–

* Visibility depends on order options or device settings

10.5.5 Displaying the I/O configuration

The **I/O configuration** submenu guides the user systematically through all the parameters in which the configuration of the I/O modules is displayed.

Navigation
"Setup" menu → I/O configuration

▶ I/O configuration	
I/O module 1 to n terminal numbers	→ 119
I/O module 1 to n information	→ 119
I/O module 1 to n type	→ 119
Apply I/O configuration	→ 119
Alteration code	→ 119

Parameter overview with brief description

Parameter	Description	User interface / Selection / User entry
I/O module 1 to n terminal numbers	Shows the terminal numbers used by the I/O module.	▪ Not used ▪ 26-27 (I/O 1) ▪ 24-25 (I/O 2) ▪ 22-23 (I/O 3) ▪ 20-21 (I/O 4)
I/O module 1 to n information	Shows information of the plugged I/O module.	▪ Not plugged ▪ Invalid ▪ Not configurable ▪ Configurable ▪ EtherNet/IP
I/O module 1 to n type	Shows the I/O module type.	▪ Off ▪ Current output * ▪ Current input * ▪ Status input * ▪ Pulse/frequency/switch output *
Apply I/O configuration	Apply parameterization of the freely configurable I/O module.	▪ No ▪ Yes
Alteration code	Enter the code in order to change the I/O configuration.	Positive integer

* Visibility depends on order options or device settings

10.5.6 Configuring the current input

The **"Current input" wizard** guides the user systematically through all the parameters that have to be set for configuring the current input.

Navigation
"Setup" menu → Current input

▶ Current input 1 to n	
Terminal number	→ 📄 120
Signal mode	→ 📄 120
0/4 mA value	→ 📄 120
20 mA value	→ 📄 120
Current span	→ 📄 120
Failure mode	→ 📄 120
Failure value	→ 📄 120

Parameter overview with brief description

Parameter	Prerequisite	Description	User interface / Selection / User entry	Factory setting
Terminal number	–	Shows the terminal numbers used by the current input module.	▪ Not used ▪ 24-25 (I/O 2) ▪ 22-23 (I/O 3) ▪ 20-21 (I/O 4)	–
Signal mode	The measuring device is **not** approved for use in the hazardous area with type of protection Ex-i.	Select the signal mode for the current input.	▪ Passive ▪ Active	Active
0/4 mA value	–	Enter 4 mA value.	Signed floating-point number	–
20 mA value	–	Enter 20 mA value.	Signed floating-point number	Depends on country and nominal diameter
Current span	–	Select current range for process value output and upper/lower level for alarm signal.	▪ 4...20 mA ▪ 4...20 mA NAMUR ▪ 4...20 mA US ▪ 0...20 mA	Country-specific: ▪ 4...20 mA NAMUR ▪ 4...20 mA US
Failure mode	–	Define input behavior in alarm condition.	▪ Alarm ▪ Last valid value ▪ Defined value	–
Failure value	In the **Failure mode** parameter, the **Defined value** option is selected.	Enter value to be used by the device if input value from external device is missing.	Signed floating-point number	–

10.5.7 Configuring the status input

The **Status input** submenu guides the user systematically through all the parameters that have to be set for configuring the status input.

Navigation
"Setup" menu → Status input

▶ Status input 1 to n	
Assign status input	→ 📄 121
Terminal number	→ 📄 121
Active level	→ 📄 121
Terminal number	→ 📄 121
Response time status input	→ 📄 121
Terminal number	→ 📄 121

Parameter overview with brief description

Parameter	Description	User interface / Selection / User entry
Terminal number	Shows the terminal numbers used by the status input module.	▪ Not used ▪ 24-25 (I/O 2) ▪ 22-23 (I/O 3) ▪ 20-21 (I/O 4)
Assign status input	Select function for the status input.	▪ Off ▪ Reset totalizer 1 ▪ Reset totalizer 2 ▪ Reset totalizer 3 ▪ Reset all totalizers ▪ Flow override
Active level	Define input signal level at which the assigned function is triggered.	▪ High ▪ Low
Response time status input	Define the minimum amount of time the input signal level must be present before the selected function is triggered.	5 to 200 ms

10.5.8 Configuring the current output

The **Current output** wizard guides you systematically through all the parameters that have to be set for configuring the current output.

Navigation
"Setup" menu → Current output

▶ Current output 1 to n	
Terminal number	→ 📄 122
Signal mode	→ 📄 122
Assign current output 1 to n	→ 📄 123

Current span	→ 📄 123
0/4 mA value	→ 📄 124
20 mA value	→ 📄 124
Fixed current	→ 📄 124
Damping output 1 to n	→ 📄 124
Failure mode	→ 📄 124
Failure current	→ 📄 124

Parameter overview with brief description

Parameter	Prerequisite	Description	User interface / Selection / User entry	Factory setting
Terminal number	–	Shows the terminal numbers used by the current output module.	▪ Not used ▪ 24-25 (I/O 2) ▪ 22-23 (I/O 3) ▪ 20-21 (I/O 4)	–
Signal mode	–	Select the signal mode for the current output.	▪ Passive ▪ Active	Active

Parameter	Prerequisite	Description	User interface / Selection / User entry	Factory setting
Assign current output 1 to n	–	Select process variable for current output.	▪ Off ▪ Mass flow ▪ Volume flow ▪ Corrected volume flow ▪ Target mass flow * ▪ Carrier mass flow * ▪ Target volume flow * ▪ Carrier volume flow * ▪ Target corrected volume flow * ▪ Carrier corrected volume flow * ▪ Density ▪ Reference density ▪ Reference density alternative * ▪ GSV flow * ▪ GSV flow alternative * ▪ NSV flow * ▪ NSV flow alternative * ▪ S&W volume flow * ▪ Water cut * ▪ Oil density * ▪ Water density * ▪ Oil mass flow * ▪ Water mass flow * ▪ Oil volume flow * ▪ Water volume flow * ▪ Oil corrected volume flow * ▪ Water corrected volume flow * ▪ Concentration * ▪ Temperature ▪ Carrier pipe temperature * ▪ Electronic temperature ▪ Oscillation frequency 0 ▪ Oscillation amplitude 0 * ▪ Frequency fluctuation 0 ▪ Oscillation damping 0 ▪ Oscillation damping fluctuation 0 ▪ Signal asymmetry ▪ Exciter current 0 ▪ HBSI * ▪ Pressure *	–
Current span	–	Select current range for process value output and upper/lower level for alarm signal.	▪ 4...20 mA NAMUR ▪ 4...20 mA US ▪ 4...20 mA ▪ 0...20 mA ▪ Fixed current	Country-specific: ▪ 4...20 mA NAMUR ▪ 4...20 mA US

Parameter	Prerequisite	Description	User interface / Selection / User entry	Factory setting
0/4 mA value	One of the following options is selected in the **Current span** parameter (→ 🗎 123): ▪ 4...20 mA NAMUR ▪ 4...20 mA US ▪ 4...20 mA ▪ 0...20 mA	Enter 4 mA value.	Signed floating-point number	Country-specific: ▪ 0 kg/h ▪ 0 lb/min
20 mA value	One of the following options is selected in the **Current span** parameter (→ 🗎 123): ▪ 4...20 mA NAMUR ▪ 4...20 mA US ▪ 4...20 mA ▪ 0...20 mA	Enter 20 mA value.	Signed floating-point number	Depends on country and nominal diameter
Fixed current	The **Fixed current** option is selected in the **Current span** parameter (→ 🗎 123).	Defines the fixed output current.	0 to 22.5 mA	22.5 mA
Damping output 1 to n	A process variable is selected in the **Assign current output** parameter (→ 🗎 123) and one of the following options is selected in the **Current span** parameter (→ 🗎 123): ▪ 4...20 mA NAMUR ▪ 4...20 mA US ▪ 4...20 mA ▪ 0...20 mA	Set reaction time for output signal to fluctuations in the measured value.	0.0 to 999.9 s	–
Failure mode	A process variable is selected in the **Assign current output** parameter (→ 🗎 123) and one of the following options is selected in the **Current span** parameter (→ 🗎 123): ▪ 4...20 mA NAMUR ▪ 4...20 mA US ▪ 4...20 mA ▪ 0...20 mA	Define output behavior in alarm condition.	▪ Min. ▪ Max. ▪ Last valid value ▪ Actual value ▪ Defined value	–
Failure current	The **Defined value** option is selected in the **Failure mode** parameter.	Enter current output value in alarm condition.	0 to 22.5 mA	22.5 mA

* Visibility depends on order options or device settings

10.5.9 Configuring the pulse/frequency/switch output

The **Pulse/frequency/switch output** wizard guides you systematically through all the parameters that can be set for configuring the selected output type.

Navigation
"Setup" menu → Advanced setup → Pulse/frequency/switch output

▶ **Pulse/frequency/switch output 1 to n**		
	Operating mode	→ 📄 125

Parameter overview with brief description

Parameter	Description	Selection
Operating mode	Define the output as a pulse, frequency or switch output.	▪ Pulse ▪ Frequency ▪ Switch

Configuring the pulse output

Navigation
"Setup" menu → Pulse/frequency/switch output

▶ **Pulse/frequency/switch output 1 to n**		
	Operating mode	→ 📄 126
	Terminal number	→ 📄 126
	Signal mode	→ 📄 126
	Assign pulse output	→ 📄 126
	Value per pulse	→ 📄 126
	Pulse width	→ 📄 126
	Failure mode	→ 📄 127
	Invert output signal	→ 📄 127

Parameter overview with brief description

Parameter	Prerequisite	Description	Selection / User interface / User entry	Factory setting
Operating mode	–	Define the output as a pulse, frequency or switch output.	▪ Pulse ▪ Frequency ▪ Switch	–
Terminal number	–	Shows the terminal numbers used by the PFS output module.	▪ Not used ▪ 24-25 (I/O 2) ▪ 22-23 (I/O 3) ▪ 20-21 (I/O 4)	–
Signal mode	–	Select the signal mode for the PFS output.	▪ Passive ▪ Active	–
Assign pulse output 1 to n	The **Pulse** option is selected in the **Operating mode** parameter parameter.	Select process variable for pulse output.	▪ Off ▪ Mass flow ▪ Volume flow ▪ Corrected volume flow ▪ Target mass flow * ▪ Carrier mass flow * ▪ Target volume flow * ▪ Carrier volume flow * ▪ Target corrected volume flow * ▪ Carrier corrected volume flow * ▪ GSV flow * ▪ GSV flow alternative * ▪ NSV flow * ▪ NSV flow alternative * ▪ S&W volume flow * ▪ Oil mass flow * ▪ Water mass flow * ▪ Oil volume flow * ▪ Water volume flow * ▪ Oil corrected volume flow * ▪ Water corrected volume flow *	–
Value per pulse	The **Pulse** option is selected in the **Operating mode** parameter (→ 🗎 125) and a process variable is selected in the **Assign pulse output** parameter (→ 🗎 126).	Enter measured value at which a pulse is output.	Signed floating-point number	Depends on country and nominal diameter
Pulse width	The **Pulse** option is selected in the **Operating mode** parameter (→ 🗎 125) and a process variable is selected in the **Assign pulse output** parameter (→ 🗎 126).	Define time width of the output pulse.	0.05 to 2 000 ms	–

Parameter	Prerequisite	Description	Selection / User interface / User entry	Factory setting
Failure mode	The **Pulse** option is selected in the **Operating mode** parameter (→ 🗎 125) and a process variable is selected in the **Assign pulse output** parameter (→ 🗎 126).	Define output behavior in alarm condition.	▪ Actual value ▪ No pulses	–
Invert output signal	–	Invert the output signal.	▪ No ▪ Yes	–

* Visibility depends on order options or device settings

Configuring the frequency output

Navigation

"Setup" menu → Pulse/frequency/switch output

▶ **Pulse/frequency/switch output 1 to n**

Operating mode	→ 🗎 128
Terminal number	→ 🗎 128
Signal mode	→ 🗎 128
Assign frequency output	→ 🗎 129
Minimum frequency value	→ 🗎 129
Maximum frequency value	→ 🗎 130
Measuring value at minimum frequency	→ 🗎 130
Measuring value at maximum frequency	→ 🗎 130
Failure mode	→ 🗎 130
Failure frequency	→ 🗎 130
Invert output signal	→ 🗎 130

Parameter overview with brief description

Parameter	Prerequisite	Description	Selection / User interface / User entry	Factory setting
Operating mode	–	Define the output as a pulse, frequency or switch output.	▪ Pulse ▪ Frequency ▪ Switch	–
Terminal number	–	Shows the terminal numbers used by the PFS output module.	▪ Not used ▪ 24-25 (I/O 2) ▪ 22-23 (I/O 3) ▪ 20-21 (I/O 4)	–
Signal mode	–	Select the signal mode for the PFS output.	▪ Passive ▪ Active	–

Parameter	Prerequisite	Description	Selection / User interface / User entry	Factory setting
Assign frequency output	The **Frequency** option is selected in the **Operating mode** parameter (→ 🗎 125) parameter.	Select process variable for frequency output.	▪ Off ▪ Mass flow ▪ Volume flow ▪ Corrected volume flow ▪ Target mass flow * ▪ Carrier mass flow * ▪ Target volume flow * ▪ Carrier volume flow * ▪ Target corrected volume flow * ▪ Carrier corrected volume flow * ▪ Density ▪ Reference density ▪ Reference density alternative * ▪ GSV flow * ▪ GSV flow alternative * ▪ NSV flow * ▪ NSV flow alternative * ▪ S&W volume flow * ▪ Water cut * ▪ Oil density * ▪ Water density * ▪ Oil mass flow * ▪ Water mass flow * ▪ Oil volume flow * ▪ Water volume flow * ▪ Oil corrected volume flow * ▪ Water corrected volume flow * ▪ Concentration * ▪ Temperature ▪ Carrier pipe temperature * ▪ Electronic temperature ▪ Oscillation frequency 0 ▪ Oscillation amplitude 0 ▪ Frequency fluctuation 0 ▪ Oscillation damping 0 ▪ Oscillation damping fluctuation 0 ▪ Signal asymmetry ▪ Exciter current 0 ▪ HBSI * ▪ Pressure	–
Minimum frequency value	The **Frequency** option is selected in the **Operating mode** parameter (→ 🗎 125) and a process variable is selected in the **Assign frequency output** parameter (→ 🗎 129).	Enter minimum frequency.	0.0 to 10 000.0 Hz	–

Parameter	Prerequisite	Description	Selection / User interface / User entry	Factory setting
Maximum frequency value	The **Frequency** option is selected in the **Operating mode** parameter (→ 🗎 125) and a process variable is selected in the **Assign frequency output** parameter (→ 🗎 129).	Enter maximum frequency.	0.0 to 10 000.0 Hz	–
Measuring value at minimum frequency	The **Frequency** option is selected in the **Operating mode** parameter (→ 🗎 125) and a process variable is selected in the **Assign frequency output** parameter (→ 🗎 129).	Enter measured value for minmum frequency.	Signed floating-point number	Depends on country and nominal diameter
Measuring value at maximum frequency	The **Frequency** option is selected in the **Operating mode** parameter (→ 🗎 125) and a process variable is selected in the **Assign frequency output** parameter (→ 🗎 129).	Enter measured value for maximum frequency.	Signed floating-point number	Depends on country and nominal diameter
Failure mode	The **Frequency** option is selected in the **Operating mode** parameter (→ 🗎 125) and a process variable is selected in the **Assign frequency output** parameter (→ 🗎 129).	Define output behavior in alarm condition.	▪ Actual value ▪ Defined value ▪ 0 Hz	–
Failure frequency	The **Frequency** option is selected in the **Operating mode** parameter (→ 🗎 125) and a process variable is selected in the **Assign frequency output** parameter (→ 🗎 129).	Enter frequency output value in alarm condition.	0.0 to 12 500.0 Hz	–
Invert output signal	–	Invert the output signal.	▪ No ▪ Yes	–

* Visibility depends on order options or device settings

Configuring the switch output

Navigation
"Setup" menu → Pulse/frequency/switch output

▶ Pulse/frequency/switch output 1 to n	
Operating mode	→ 📄 131
Terminal number	→ 📄 131
Signal mode	→ 📄 131
Switch output function	→ 📄 132
Assign diagnostic behavior	→ 📄 132
Assign limit	→ 📄 132
Assign flow direction check	→ 📄 133
Assign status	→ 📄 133
Switch-on value	→ 📄 133
Switch-off value	→ 📄 133
Switch-on delay	→ 📄 133
Switch-off delay	→ 📄 133
Failure mode	→ 📄 133
Invert output signal	→ 📄 133

Parameter overview with brief description

Parameter	Prerequisite	Description	Selection / User interface / User entry	Factory setting
Operating mode	–	Define the output as a pulse, frequency or switch output.	▪ Pulse ▪ Frequency ▪ Switch	–
Terminal number	–	Shows the terminal numbers used by the PFS output module.	▪ Not used ▪ 24-25 (I/O 2) ▪ 22-23 (I/O 3) ▪ 20-21 (I/O 4)	–
Signal mode	–	Select the signal mode for the PFS output.	▪ Passive ▪ Active	–

Parameter	Prerequisite	Description	Selection / User interface / User entry	Factory setting
Switch output function	The **Switch** option is selected in the **Operating mode** parameter.	Select function for switch output.	▪ Off ▪ On ▪ Diagnostic behavior ▪ Limit ▪ Flow direction check ▪ Status	–
Assign diagnostic behavior	▪ In the **Operating mode** parameter, the **Switch** option is selected. ▪ In the **Switch output function** parameter, the **Diagnostic behavior** option is selected.	Select diagnostic behavior for switch output.	▪ Alarm ▪ Alarm or warning ▪ Warning	–
Assign limit	▪ The **Switch** option is selected in the **Operating mode** parameter parameter. ▪ The **Limit** option is selected in the **Switch output function** parameter parameter.	Select process variable for limit function.	▪ Mass flow ▪ Volume flow ▪ Corrected volume flow ▪ Target mass flow * ▪ Carrier mass flow * ▪ Target volume flow * ▪ Carrier volume flow * ▪ Target corrected volume flow * ▪ Carrier corrected volume flow * ▪ Density ▪ Reference density ▪ Reference density alternative * ▪ GSV flow * ▪ GSV flow alternative * ▪ NSV flow * ▪ NSV flow alternative * ▪ S&W volume flow * ▪ Water cut * ▪ Oil density * ▪ Water density * ▪ Oil mass flow * ▪ Water mass flow * ▪ Oil volume flow * ▪ Water volume flow * ▪ Oil corrected volume flow * ▪ Water corrected volume flow * ▪ Concentration * ▪ Temperature ▪ Totalizer 1 ▪ Totalizer 2 ▪ Totalizer 3 ▪ Oscillation damping ▪ Pressure	–

Parameter	Prerequisite	Description	Selection / User interface / User entry	Factory setting
Assign flow direction check	▪ The **Switch** option is selected in the **Operating mode** parameter. ▪ The **Flow direction check** option is selected in the **Switch output function** parameter.	Select process variable for flow direction monitoring.	▪ Off ▪ Volume flow ▪ Mass flow ▪ Corrected volume flow	–
Assign status	▪ The **Switch** option is selected in the **Operating mode** parameter. ▪ The **Status** option is selected in the **Switch output function** parameter.	Select device status for switch output.	▪ Partially filled pipe detection ▪ Low flow cut off	–
Switch-on value	▪ In the **Operating mode** parameter, the **Switch** option is selected. ▪ In the **Switch output function** parameter, the **Limit** option is selected.	Enter measured value for the switch-on point.	Signed floating-point number	Country-specific: ▪ 0 kg/h ▪ 0 lb/min
Switch-off value	▪ In the **Operating mode** parameter, the **Switch** option is selected. ▪ In the **Switch output function** parameter, the **Limit** option is selected.	Enter measured value for the switch-off point.	Signed floating-point number	Country-specific: ▪ 0 kg/h ▪ 0 lb/min
Switch-on delay	▪ The **Switch** option is selected in the **Operating mode** parameter. ▪ The **Limit** option is selected in the **Switch output function** parameter.	Define delay for the switch-on of status output.	0.0 to 100.0 s	–
Switch-off delay	▪ The **Switch** option is selected in the **Operating mode** parameter. ▪ The **Limit** option is selected in the **Switch output function** parameter.	Define delay for the switch-off of status output.	0.0 to 100.0 s	–
Failure mode	–	Define output behavior in alarm condition.	▪ Actual status ▪ Open ▪ Closed	–
Invert output signal	–	Invert the output signal.	▪ No ▪ Yes	–

* Visibility depends on order options or device settings

10.5.10 Configuring the relay output

The **Relay output** wizard guides the user systematically through all the parameters that have to be set for configuring the relay output.

Navigation

"Setup" menu → Relay output 1 to n

▶ **RelaisOutput 1 to n**	
Switch output function	→ 📄 134

Assign flow direction check	→ 134
Assign limit	→ 135
Assign diagnostic behavior	→ 135
Assign status	→ 135
Switch-off value	→ 135
Switch-on value	→ 136
Failure mode	→ 136

Parameter overview with brief description

Parameter	Prerequisite	Description	Selection / User interface / User entry	Factory setting
Relay output function	–	Select the function for the relay output.	▪ Closed ▪ Open ▪ Diagnostic behavior ▪ Limit ▪ Flow direction check ▪ Digital Output	–
Terminal number	–	Shows the terminal numbers used by the relay output module.	▪ Not used ▪ 24-25 (I/O 2) ▪ 22-23 (I/O 3) ▪ 20-21 (I/O 4)	–
Assign flow direction check	In the **Relay output function** parameter, the **Flow direction check** option is selected.	Select process variable for flow direction monitoring.	▪ Off ▪ Volume flow ▪ Mass flow ▪ Corrected volume flow	–

Parameter	Prerequisite	Description	Selection / User interface / User entry	Factory setting
Assign limit	The **Limit** option is selected in the **Relay output function** parameter parameter.	Select process variable for limit function.	▪ Mass flow ▪ Volume flow ▪ Corrected volume flow ▪ Target mass flow * ▪ Carrier mass flow * ▪ Target volume flow * ▪ Carrier volume flow * ▪ Target corrected volume flow * ▪ Carrier corrected volume flow * ▪ Density ▪ Reference density ▪ Reference density alternative * ▪ GSV flow * ▪ GSV flow alternative * ▪ NSV flow * ▪ NSV flow alternative * ▪ S&W volume flow * ▪ Water cut * ▪ Oil density * ▪ Water density * ▪ Oil mass flow * ▪ Water mass flow * ▪ Oil volume flow * ▪ Water volume flow * ▪ Oil corrected volume flow * ▪ Water corrected volume flow * ▪ Dynamic viscosity ▪ Concentration * ▪ Kinematic viscosity ▪ Temp. compensated dynamic viscosity ▪ Temp. compensated kinematic viscosity ▪ Temperature ▪ Totalizer 1 ▪ Totalizer 2 ▪ Totalizer 3 ▪ Oscillation damping ▪ Pressure	–
Assign diagnostic behavior	In the **Relay output function** parameter, the **Diagnostic behavior** option is selected.	Select diagnostic behavior for switch output.	▪ Alarm ▪ Alarm or warning ▪ Warning	–
Assign status	In the **Relay output function** parameter, the **Digital Output** option is selected.	Select device status for switch output.	▪ Partially filled pipe detection ▪ Low flow cut off	–
Switch-off value	In the **Relay output function** parameter, the **Limit** option is selected.	Enter measured value for the switch-off point.	Signed floating-point number	Country-specific: ▪ 0 kg/h ▪ 0 lb/min

Parameter	Prerequisite	Description	Selection / User interface / User entry	Factory setting
Switch-off delay	In the **Relay output function** parameter, the **Limit** option is selected.	Define delay for the switch-off of status output.	0.0 to 100.0 s	–
Switch-on value	In the **Relay output function** parameter, the **Limit** option is selected.	Enter measured value for the switch-on point.	Signed floating-point number	Country-specific: ▪ 0 kg/h ▪ 0 lb/min
Switch-on delay	In the **Relay output function** parameter, the **Limit** option is selected.	Define delay for the switch-on of status output.	0.0 to 100.0 s	–
Failure mode	–	Define output behavior in alarm condition.	▪ Actual status ▪ Open ▪ Closed	–

* Visibility depends on order options or device settings

10.5.11 Configuring the local display

The **Display** wizard guides you systematically through all the parameters that can configured for configuring the local display.

Navigation
"Setup" menu → Display

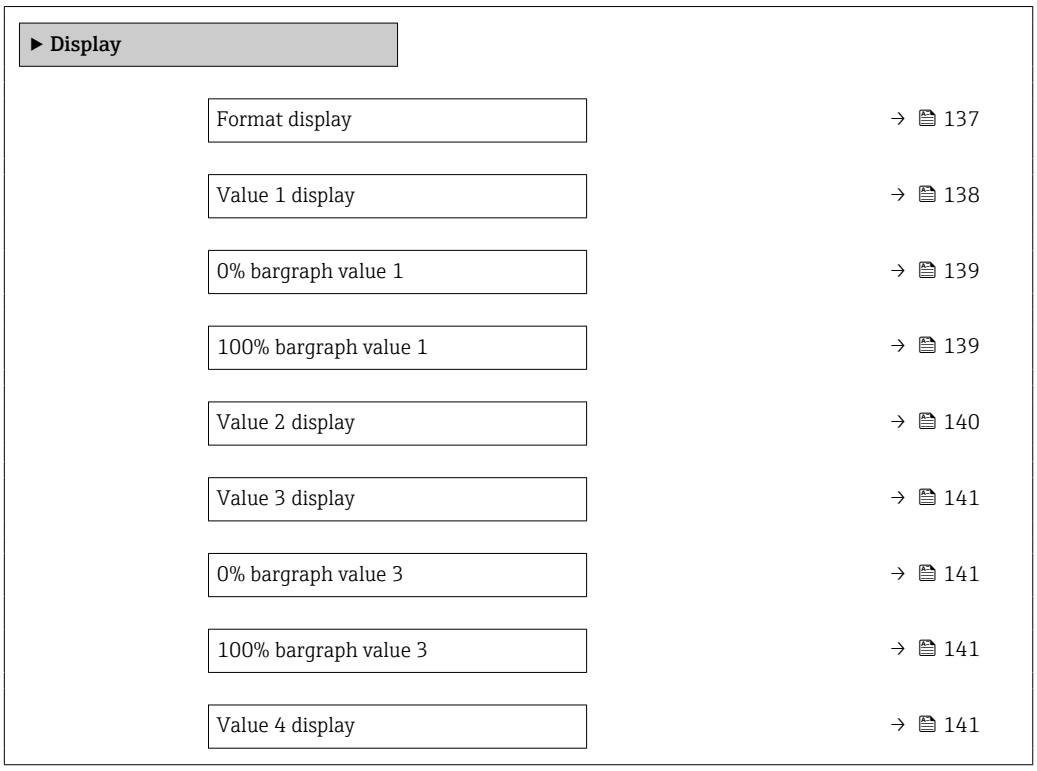

Parameter overview with brief description

Parameter	Prerequisite	Description	Selection / User entry	Factory setting
Format display	A local display is provided.	Select how measured values are shown on the display.	▪ 1 value, max. size ▪ 1 bargraph + 1 value ▪ 2 values ▪ 1 value large + 2 values ▪ 4 values	–

Parameter	Prerequisite	Description	Selection / User entry	Factory setting
Value 1 display	A local display is provided.	Select the measured value that is shown on the local display.	▪ Mass flow ▪ Volume flow ▪ Corrected volume flow ▪ Target mass flow * ▪ Carrier mass flow * ▪ Target volume flow * ▪ Carrier volume flow * ▪ Target corrected volume flow * ▪ Carrier corrected volume flow * ▪ Density ▪ Reference density ▪ Reference density alternative * ▪ GSV flow * ▪ GSV flow alternative * ▪ NSV flow * ▪ NSV flow alternative * ▪ S&W volume flow * ▪ Water cut * ▪ Oil density * ▪ Water density * ▪ Oil mass flow * ▪ Water mass flow * ▪ Oil volume flow * ▪ Water volume flow * ▪ Oil corrected volume flow * ▪ Water corrected volume flow * ▪ Weighted density average * ▪ Weighted temperature average * ▪ Concentration * ▪ Temperature ▪ Carrier pipe temperature * ▪ Electronic temperature ▪ Oscillation frequency 0 ▪ Oscillation amplitude 0 * ▪ Frequency fluctuation 0 ▪ Oscillation damping 0 ▪ Oscillation damping fluctuation 0 ▪ Signal asymmetry ▪ Exciter current 0 ▪ Totalizer 1 ▪ Totalizer 2 ▪ Totalizer 3 ▪ Current output 1 ▪ Current output 2 * ▪ Current output 3 * ▪ Current output 4 *	–

Parameter	Prerequisite	Description	Selection / User entry	Factory setting
			▪ Pressure	
0% bargraph value 1	A local display is provided.	Enter 0% value for bar graph display.	Signed floating-point number	Country-specific: ▪ 0 kg/h ▪ 0 lb/min
100% bargraph value 1	A local display is provided.	Enter 100% value for bar graph display.	Signed floating-point number	Depends on country and nominal diameter

Parameter	Prerequisite	Description	Selection / User entry	Factory setting
Value 2 display	A local display is provided.	Select the measured value that is shown on the local display.	▪ None ▪ Mass flow ▪ Volume flow ▪ Corrected volume flow ▪ Target mass flow ▪ Carrier mass flow ▪ Target volume flow ▪ Carrier volume flow ▪ Target corrected volume flow ▪ Carrier corrected volume flow ▪ Density ▪ Reference density ▪ Reference density alternative ▪ GSV flow ▪ GSV flow alternative ▪ NSV flow ▪ NSV flow alternative ▪ S&W volume flow ▪ Water cut ▪ Oil density ▪ Water density ▪ Oil mass flow ▪ Water mass flow ▪ Oil volume flow ▪ Water corrected volume flow ▪ Oil corrected volume flow ▪ Water volume flow ▪ Weighted density average ▪ Weighted temperature average ▪ Concentration ▪ Dynamic viscosity ▪ Kinematic viscosity ▪ Temp. compensated dynamic viscosity ▪ Temp. compensated kinematic viscosity ▪ Temperature ▪ Carrier pipe temperature ▪ Electronic temperature ▪ Oscillation frequency 0 ▪ Oscillation frequency 1 ▪ Oscillation amplitude 0 ▪ Oscillation amplitude 1 ▪ Frequency fluctuation 0 ▪ Frequency fluctuation 1	–

Parameter	Prerequisite	Description	Selection / User entry	Factory setting
			▪ Oscillation damping 0 ▪ Oscillation damping 1 ▪ Oscillation damping fluctuation 0 ▪ Oscillation damping fluctuation 1 ▪ Signal asymmetry ▪ Exciter current 0 ▪ Exciter current 1 ▪ HBSI ▪ Totalizer 1 ▪ Totalizer 2 ▪ Totalizer 3 ▪ Current output 1 ▪ Current output 2 * ▪ Current output 3 * ▪ Current output 4 * ▪ Pressure	
Value 3 display	A local display is provided.	Select the measured value that is shown on the local display.	For the picklist, see the **Value 2 display** parameter (→ 🗎 140)	–
0% bargraph value 3	A selection was made in the **Value 3 display** parameter.	Enter 0% value for bar graph display.	Signed floating-point number	Country-specific: ▪ 0 kg/h ▪ 0 lb/min
100% bargraph value 3	A selection was made in the **Value 3 display** parameter.	Enter 100% value for bar graph display.	Signed floating-point number	–
Value 4 display	A local display is provided.	Select the measured value that is shown on the local display.	For the picklist, see the **Value 2 display** parameter (→ 🗎 140)	–

* Visibility depends on order options or device settings

10.5.12 Configuring the low flow cut off

The **Low flow cut off** wizard systematically guides the user through all the parameters that must be set to configure low flow cut off.

Navigation
"Setup" menu → Low flow cut off

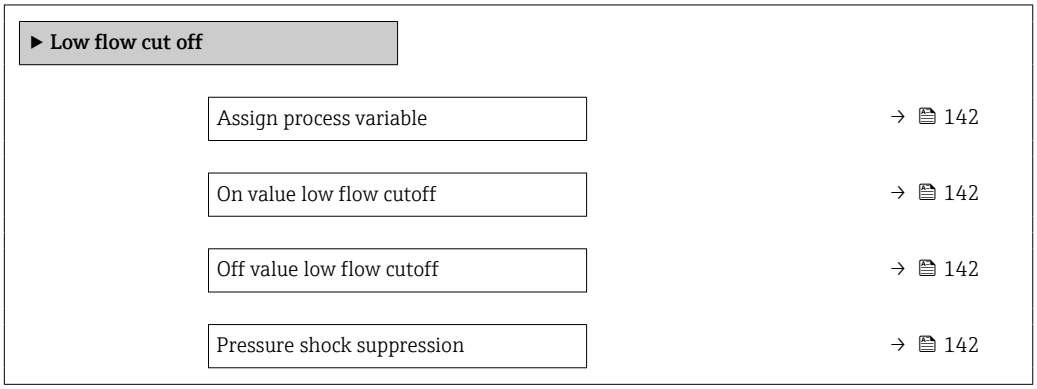

Parameter overview with brief description

Parameter	Prerequisite	Description	Selection / User entry	Factory setting
Assign process variable	–	Select process variable for low flow cut off.	▪ Off ▪ Mass flow ▪ Volume flow ▪ Corrected volume flow	–
On value low flow cutoff	A process variable is selected in the **Assign process variable** parameter (→ 142).	Enter on value for low flow cut off.	Positive floating-point number	Depends on country and nominal diameter
Off value low flow cutoff	A process variable is selected in the **Assign process variable** parameter (→ 142).	Enter off value for low flow cut off.	0 to 100.0 %	–
Pressure shock suppression	A process variable is selected in the **Assign process variable** parameter (→ 142).	Enter time frame for signal suppression (= active pressure shock suppression).	0 to 100 s	–

10.5.13 Configuring the partial filled pipe detection

The **Partial filled pipe detection** wizard guides you systematically through all parameters that have to be set for configuring the monitoring of the pipe filling.

Navigation
"Setup" menu → Partially filled pipe detection

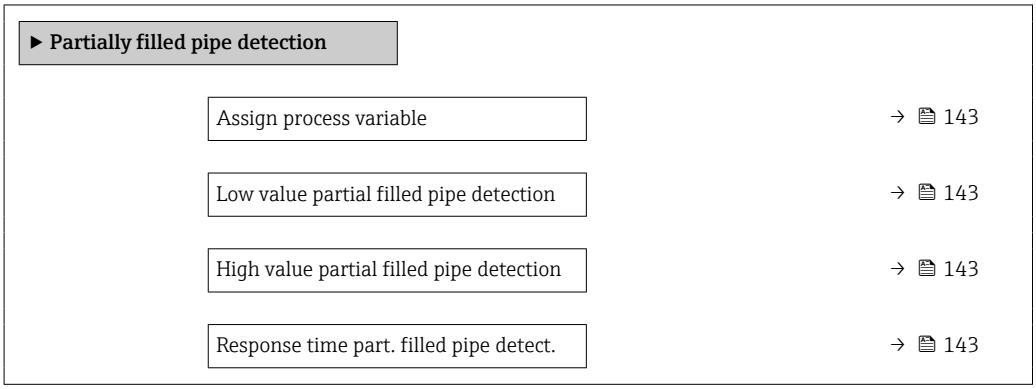

Parameter overview with brief description

Parameter	Prerequisite	Description	Selection / User entry
Assign process variable	–	Select process variable for partially filled pipe detection.	▪ Off ▪ Density ▪ Reference density
Low value partial filled pipe detection	A process variable is selected in the **Assign process variable** parameter (→ 143).	Enter lower limit value for deactivating partialy filled pipe detection.	Signed floating-point number
High value partial filled pipe detection	A process variable is selected in the **Assign process variable** parameter (→ 143).	Enter upper limit value for deactivating partialy filled pipe detection.	Signed floating-point number
Response time part. filled pipe detect.	A process variable is selected in the **Assign process variable** parameter (→ 143).	Enter time before diagnostic message is displayed for partially filled pipe detection.	0 to 100 s

10.6 Advanced settings

The **Advanced setup** submenu together with its submenus contains parameters for specific settings.

Navigation to the "Advanced setup" submenu

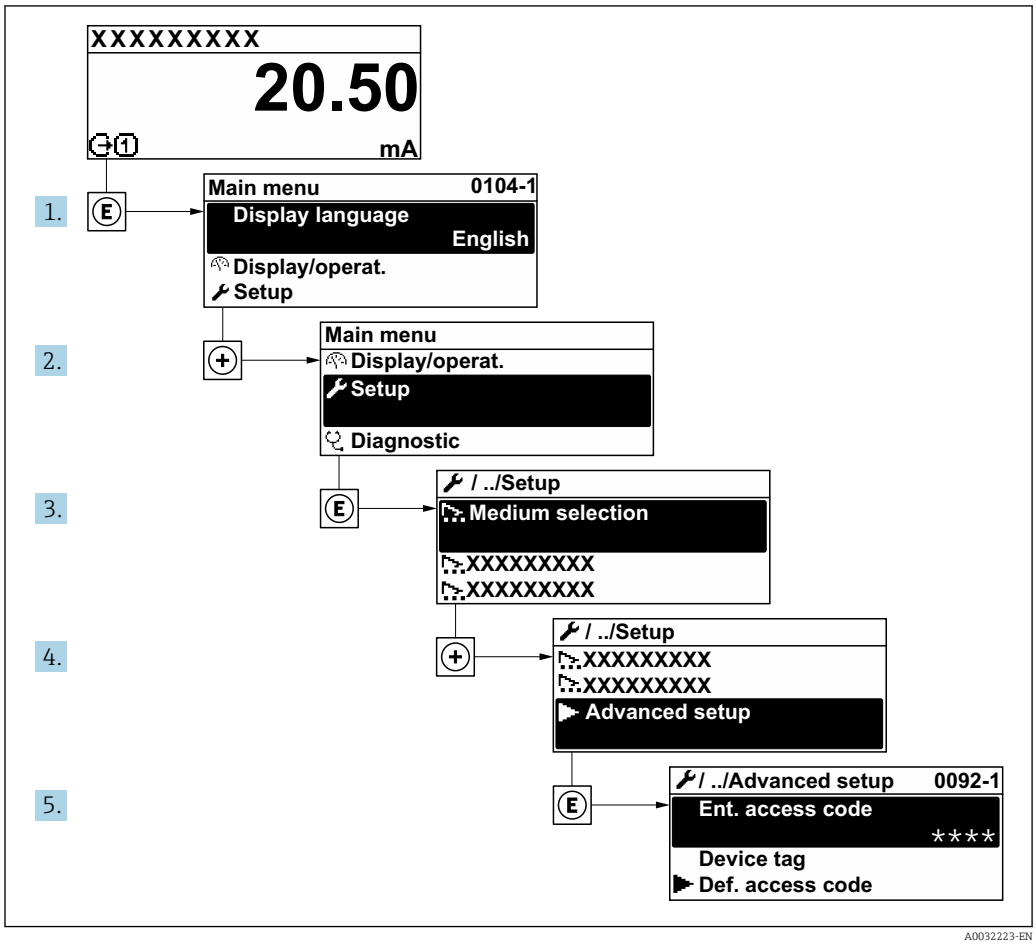

A0032223-EN

The number of submenus can vary depending on the device version. Some submenus are not dealt with in the Operating Instructions. These submenus and the parameters they contain are explained in the Special Documentation for the device.

Navigation

"Setup" menu → Advanced setup

▶ Advanced setup		
	Enter access code	→ 📄 145
	▶ Calculated values	→ 📄 145
	▶ Sensor adjustment	→ 📄 146
	▶ Totalizer 1 to n	→ 📄 147
	▶ Display	→ 📄 150

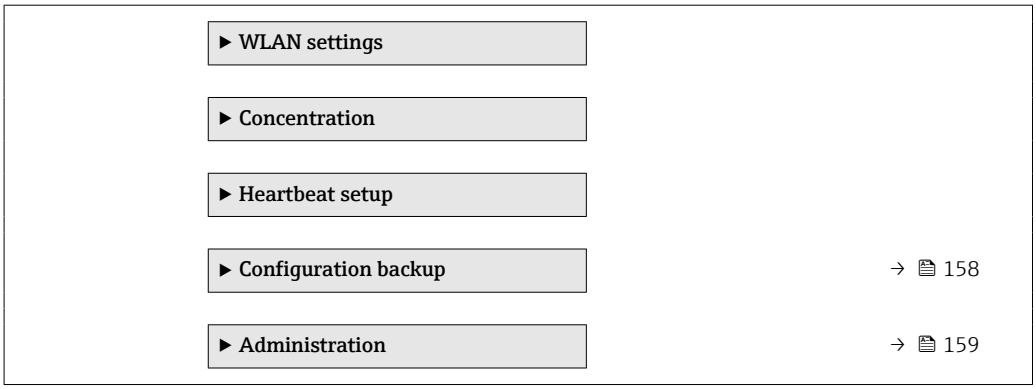

10.6.1 Using the parameter to enter the access code

Navigation
"Setup" menu → Advanced setup

Parameter overview with brief description

Parameter	Description	User entry
Enter access code	Enter access code to disable write protection of parameters.	0 to 9999

10.6.2 Calculated values

The **Calculated values** submenu contains parameters for calculating the corrected volume flow.

Navigation
"Setup" menu → Advanced setup → Calculated values

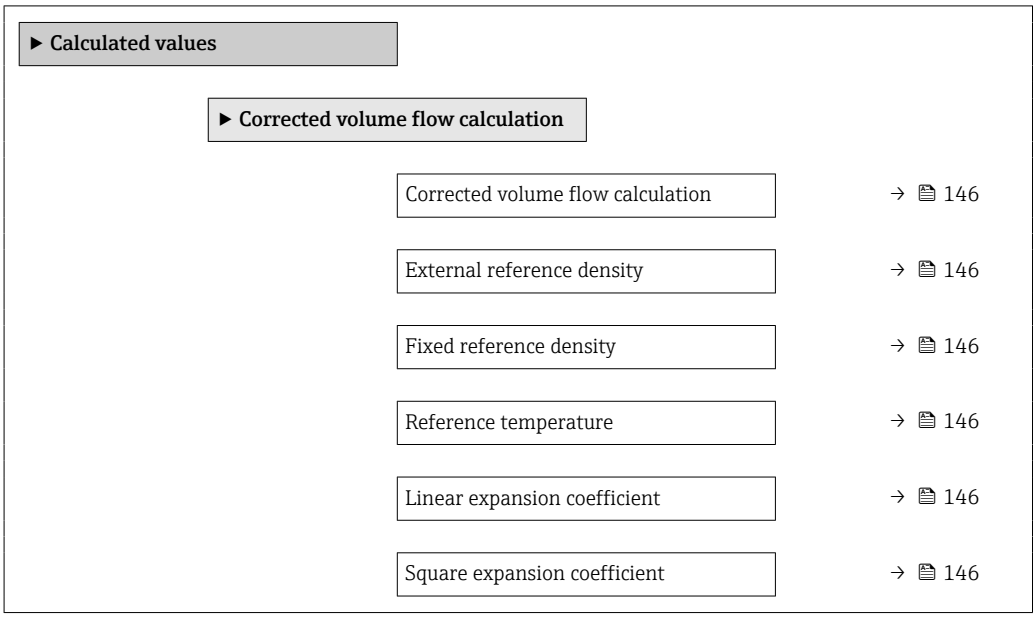

Parameter overview with brief description

Parameter	Prerequisite	Description	Selection / User interface / User entry	Factory setting
Corrected volume flow calculation	–	Select reference density for calculating the corrected volume flow.	▪ Fixed reference density ▪ Calculated reference density ▪ External reference density ▪ Current input 1 * ▪ Current input 2 * ▪ Current input 3 *	–
External reference density	In the **Corrected volume flow calculation** parameter, the **External reference density** option is selected.	Shows external reference density.	Floating point number with sign	–
Fixed reference density	The **Fixed reference density** option is selected in the **Corrected volume flow calculation** parameter parameter.	Enter fixed value for reference density.	Positive floating-point number	–
Reference temperature	The **Calculated reference density** option is selected in the **Corrected volume flow calculation** parameter parameter.	Enter reference temperature for calculating the reference density.	−273.15 to 99 999 °C	Country-specific: ▪ +20 °C ▪ +68 °F
Linear expansion coefficient	The **Calculated reference density** option is selected in the **Corrected volume flow calculation** parameter parameter.	Enter linear, medium-specific expansion coefficient for calculating the reference density.	Signed floating-point number	–
Square expansion coefficient	The **Calculated reference density** option is selected in the **Corrected volume flow calculation** parameter parameter.	For media with a non-linear expansion pattern: enter the quadratic, medium-specific expansion coefficient for calculating the reference density.	Signed floating-point number	–

* Visibility depends on order options or device settings

10.6.3 Carrying out a sensor adjustment

The **Sensor adjustment** submenu contains parameters that pertain to the functionality of the sensor.

Navigation

"Setup" menu → Advanced setup → Sensor adjustment

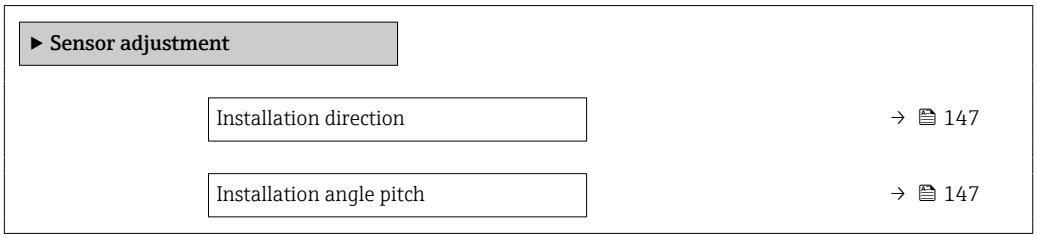

Installation angle roll	→ 📄 147
▶ **Zero point adjustment**	→ 📄 147

Parameter overview with brief description

Parameter	Description	Selection / User entry
Installation direction	Set sign of flow direction to match the direction of the arrow on the sensor.	▪ Flow in arrow direction ▪ Flow against arrow direction
Installation angle pitch	Enter the installation angle in degree.	−180 to 180 °
Installation angle roll	Enter the installation angle in degree.	−180 to 180 °

Zero point adjustment

All measuring devices are calibrated in accordance with state-of-the-art technology. Calibration takes place under reference conditions→ 📄 229. Therefore, a zero point adjustment in the field is generally not required.

Experience shows that zero point adjustment is advisable only in special cases:
- To achieve maximum measuring accuracy even with low flow rates.
- Under extreme process or operating conditions (e.g. very high process temperatures or very high-viscosity fluids).

Navigation
"Setup" menu → Advanced setup → Sensor adjustment → Zero point adjustment

▶ **Zero point adjustment**	
Zero point adjustment control	→ 📄 147
Progress	→ 📄 147

Parameter overview with brief description

Parameter	Description	Selection / User interface	Factory setting
Zero point adjustment control	Start zero point adjustment.	▪ Cancel ▪ Busy ▪ Zero point adjust failure ▪ Start	–
Progress	Shows the progress of the process.	0 to 100 %	–

10.6.4 Configuring the totalizer

In the **"Totalizer 1 to n" submenu** the individual totalizer can be configured.

Navigation

"Setup" menu → Advanced setup → Totalizer 1 to n

▶ Totalizer 1 to n	
Assign process variable	→ 📄 148
Unit totalizer 1 to n	→ 📄 148
Totalizer operation mode	→ 📄 149
Failure mode	→ 📄 149

Parameter overview with brief description

Parameter	Prerequisite	Description	Selection	Factory setting
Assign process variable	–	Select process variable for totalizer.	▪ Off ▪ Mass flow ▪ Volume flow ▪ Corrected volume flow ▪ Target mass flow * ▪ Carrier mass flow * ▪ Target volume flow * ▪ Carrier volume flow * ▪ Target corrected volume flow * ▪ Carrier corrected volume flow * ▪ GSV flow * ▪ GSV flow alternative * ▪ NSV flow * ▪ NSV flow alternative * ▪ S&W volume flow * ▪ Oil mass flow * ▪ Water mass flow * ▪ Oil volume flow * ▪ Water volume flow * ▪ Oil corrected volume flow * ▪ Water corrected volume flow *	–
Unit totalizer 1 to n	A process variable is selected in the **Assign process variable** parameter (→ 📄 148) of the **Totalizer 1 to n** submenu.	Select process variable totalizer unit.	Unit choose list	Country-specific: ▪ kg ▪ lb

Parameter	Prerequisite	Description	Selection	Factory setting
Totalizer operation mode	A process variable is selected in the **Assign process variable** parameter (→ 🗎 148) of the **Totalizer 1 to n** submenu.	Select totalizer calculation mode.	▪ Net flow total ▪ Forward flow total ▪ Reverse flow total	–
Failure mode	A process variable is selected in the **Assign process variable** parameter (→ 🗎 148) of the **Totalizer 1 to n** submenu.	Define totalizer behavior in alarm condition.	▪ Stop ▪ Actual value ▪ Last valid value	–

* Visibility depends on order options or device settings

10.6.5 Carrying out additional display configurations

In the **Display** submenu you can set all the parameters associated with the configuration of the local display.

Navigation
"Setup" menu → Advanced setup → Display

▶ Display	
Format display	→ 📄 151
Value 1 display	→ 📄 152
0% bargraph value 1	→ 📄 153
100% bargraph value 1	→ 📄 153
Decimal places 1	→ 📄 153
Value 2 display	→ 📄 154
Decimal places 2	→ 📄 155
Value 3 display	→ 📄 155
0% bargraph value 3	→ 📄 155
100% bargraph value 3	→ 📄 155
Decimal places 3	→ 📄 155
Value 4 display	→ 📄 155
Decimal places 4	→ 📄 155
Display language	→ 📄 156
Display interval	→ 📄 156
Display damping	→ 📄 156
Header	→ 📄 156
Header text	→ 📄 156
Separator	→ 📄 156
Backlight	→ 📄 156

Parameter overview with brief description

Parameter	Prerequisite	Description	Selection / User entry	Factory setting
Format display	A local display is provided.	Select how measured values are shown on the display.	▪ 1 value, max. size ▪ 1 bargraph + 1 value ▪ 2 values ▪ 1 value large + 2 values ▪ 4 values	–

Parameter	Prerequisite	Description	Selection / User entry	Factory setting
Value 1 display	A local display is provided.	Select the measured value that is shown on the local display.	▪ Mass flow ▪ Volume flow ▪ Corrected volume flow ▪ Target mass flow * ▪ Carrier mass flow * ▪ Target volume flow * ▪ Carrier volume flow * ▪ Target corrected volume flow * ▪ Carrier corrected volume flow * ▪ Density ▪ Reference density ▪ Reference density alternative * ▪ GSV flow * ▪ GSV flow alternative * ▪ NSV flow * ▪ NSV flow alternative * ▪ S&W volume flow * ▪ Water cut * ▪ Oil density * ▪ Water density * ▪ Oil mass flow * ▪ Water mass flow * ▪ Oil volume flow * ▪ Water volume flow * ▪ Oil corrected volume flow * ▪ Water corrected volume flow * ▪ Weighted density average * ▪ Weighted temperature average * ▪ Concentration * ▪ Temperature ▪ Carrier pipe temperature * ▪ Electronic temperature ▪ Oscillation frequency 0 ▪ Oscillation amplitude 0 * ▪ Frequency fluctuation 0 ▪ Oscillation damping 0 ▪ Oscillation damping fluctuation 0 ▪ Signal asymmetry ▪ Exciter current 0 ▪ Totalizer 1 ▪ Totalizer 2 ▪ Totalizer 3 ▪ Current output 1 ▪ Current output 2 * ▪ Current output 3 * ▪ Current output 4 *	–

Parameter	Prerequisite	Description	Selection / User entry	Factory setting
			▪ Pressure	
0% bargraph value 1	A local display is provided.	Enter 0% value for bar graph display.	Signed floating-point number	Country-specific: ▪ 0 kg/h ▪ 0 lb/min
100% bargraph value 1	A local display is provided.	Enter 100% value for bar graph display.	Signed floating-point number	Depends on country and nominal diameter
Decimal places 1	A measured value is specified in the **Value 1 display** parameter.	Select the number of decimal places for the display value.	▪ x ▪ x.x ▪ x.xx ▪ x.xxx ▪ x.xxxx	–

Parameter	Prerequisite	Description	Selection / User entry	Factory setting
Value 2 display	A local display is provided.	Select the measured value that is shown on the local display.	▪ None ▪ Mass flow ▪ Volume flow ▪ Corrected volume flow ▪ Target mass flow ▪ Carrier mass flow ▪ Target volume flow ▪ Carrier volume flow ▪ Target corrected volume flow ▪ Carrier corrected volume flow ▪ Density ▪ Reference density ▪ Reference density alternative ▪ GSV flow ▪ GSV flow alternative ▪ NSV flow ▪ NSV flow alternative ▪ S&W volume flow ▪ Water cut ▪ Oil density ▪ Water density ▪ Oil mass flow ▪ Water mass flow ▪ Oil volume flow ▪ Water corrected volume flow ▪ Oil corrected volume flow ▪ Water volume flow ▪ Weighted density average ▪ Weighted temperature average ▪ Concentration ▪ Dynamic viscosity ▪ Kinematic viscosity ▪ Temp. compensated dynamic viscosity ▪ Temp. compensated kinematic viscosity ▪ Temperature ▪ Carrier pipe temperature ▪ Electronic temperature ▪ Oscillation frequency 0 ▪ Oscillation frequency 1 ▪ Oscillation amplitude 0 ▪ Oscillation amplitude 1 ▪ Frequency fluctuation 0 ▪ Frequency fluctuation 1	–

Parameter	Prerequisite	Description	Selection / User entry	Factory setting
			▪ Oscillation damping 0 ▪ Oscillation damping 1 ▪ Oscillation damping fluctuation 0 ▪ Oscillation damping fluctuation 1 ▪ Signal asymmetry ▪ Exciter current 0 ▪ Exciter current 1 ▪ HBSI ▪ Totalizer 1 ▪ Totalizer 2 ▪ Totalizer 3 ▪ Current output 1 ▪ Current output 2 * ▪ Current output 3 * ▪ Current output 4 * ▪ Pressure	
Decimal places 2	A measured value is specified in the **Value 2 display** parameter.	Select the number of decimal places for the display value.	▪ x ▪ x.x ▪ x.xx ▪ x.xxx ▪ x.xxxx	–
Value 3 display	A local display is provided.	Select the measured value that is shown on the local display.	For the picklist, see the **Value 2 display** parameter (→ 🗎 140)	–
0% bargraph value 3	A selection was made in the **Value 3 display** parameter.	Enter 0% value for bar graph display.	Signed floating-point number	Country-specific: ▪ 0 kg/h ▪ 0 lb/min
100% bargraph value 3	A selection was made in the **Value 3 display** parameter.	Enter 100% value for bar graph display.	Signed floating-point number	–
Decimal places 3	A measured value is specified in the **Value 3 display** parameter.	Select the number of decimal places for the display value.	▪ x ▪ x.x ▪ x.xx ▪ x.xxx ▪ x.xxxx	–
Value 4 display	A local display is provided.	Select the measured value that is shown on the local display.	For the picklist, see the **Value 2 display** parameter (→ 🗎 140)	–
Decimal places 4	A measured value is specified in the **Value 4 display** parameter.	Select the number of decimal places for the display value.	▪ x ▪ x.x ▪ x.xx ▪ x.xxx ▪ x.xxxx	–

Parameter	Prerequisite	Description	Selection / User entry	Factory setting
Display language	A local display is provided.	Set display language.	▪ English ▪ Deutsch * ▪ Français * ▪ Español * ▪ Italiano * ▪ Nederlands * ▪ Portuguesa * ▪ Polski * ▪ русский язык (Russian) * ▪ Svenska * ▪ Türkçe * ▪ 中文 (Chinese) * ▪ 日本語 (Japanese) * ▪ 한국어 (Korean) * ▪ Bahasa Indonesia * ▪ tiếng Việt (Vietnamese) * ▪ čeština (Czech) *	English (alternatively, the ordered language is preset in the device)
Display interval	A local display is provided.	Set time measured values are shown on display if display alternates between values.	1 to 10 s	–
Display damping	A local display is provided.	Set display reaction time to fluctuations in the measured value.	0.0 to 999.9 s	–
Header	A local display is provided.	Select header contents on local display.	▪ Device tag ▪ Free text	–
Header text	In the **Header** parameter, the **Free text** option is selected.	Enter display header text.	Max. 12 characters such as letters, numbers or special characters (e.g. @, %, /)	–
Separator	A local display is provided.	Select decimal separator for displaying numerical values.	▪ . (point) ▪ , (comma)	. (point)
Backlight	One of the following conditions is met: ▪ Order code for "Display; operation", option **F** "4-line, illum.; touch control" ▪ Order code for "Display; operation", option **G** "4-line, illum.; touch control +WLAN"	Switch the local display backlight on and off.	▪ Disable ▪ Enable	–

* Visibility depends on order options or device settings

10.6.6 WLAN configuration

The **WLAN Settings** submenu guides the user systematically through all the parameters that have to be set for the WLAN configuration.

Navigation

"Setup" menu → Advanced setup → WLAN settings

▶ **WLAN settings**		
	WLAN	→ 📖 157

WLAN mode	→ 157
SSID name	→ 157
Network security	→ 157
Security identification	→ 157
User name	→ 157
WLAN password	→ 157
WLAN IP address	→ 157
WLAN passphrase	→ 158
Assign SSID name	→ 158
SSID name	→ 158
Connection state	→ 158
Received signal strength	→ 158

Parameter overview with brief description

Parameter	Prerequisite	Description	Selection / User entry / User interface	Factory setting
WLAN	–	Switch WLAN on and off.	▪ Disable ▪ Enable	–
WLAN mode	–	Select WLAN mode.	▪ WLAN access point ▪ WLAN Client	–
SSID name	The client is activated.	Enter the user-defined SSID name (max. 32 characters).	–	–
Network security	–	Select the security type of the WLAN network.	▪ Unsecured ▪ WPA2-PSK ▪ EAP-PEAP with MSCHAPv2 ▪ EAP-PEAP MSCHAPv2 no server authentic. ▪ EAP-TLS	–
Security identification	–	Select security settings and download these settings via menu Data management > Security > WLAN.	▪ Root certificate ▪ Device certificate ▪ Device private key	–
User name	–	Enter user name.	–	–
WLAN password	–	Enter WLAN password.	–	–
WLAN IP address	–	Enter IP address of the device WLAN interface.	4 octet: 0 to 255 (in the particular octet)	–

Parameter	Prerequisite	Description	Selection / User entry / User interface	Factory setting
WLAN passphrase	The **WPA2-PSK** option is selected in the **Security type** parameter.	Enter the network key (8 to 32 characters). The network key supplied with the device should be changed during commissioning for security reasons.	8 to 32-digit character string comprising numbers, letters and special characters	Serial number of the measuring device (e.g. L100A802000)
Assign SSID name	–	Select which name will be used for SSID: device tag or user-defined name.	▪ Device tag ▪ User-defined	–
SSID name	▪ The **User-defined** option is selected in the **Assign SSID name** parameter. ▪ The **WLAN access point** option is selected in the **WLAN mode** parameter.	Enter the user-defined SSID name (max. 32 characters). The user-defined SSID name may only be assigned once. If the SSID name is assigned more than once, the devices can interfere with one another.	Max. 32-digit character string comprising numbers, letters and special characters	EH_device designation_last 7 digits of the serial number (e.g. EH_Promass_500_A 802000)
Connection state	–	Displays the connection status.	▪ Connected ▪ Not connected	–
Received signal strength	–	Shows the received signal strength.	▪ Low ▪ Medium ▪ High	–

10.6.7 Configuration management

After commissioning, you can save the current device configurationor restore the previous device configuration.

You can do so using the **Configuration management** parameter and the related options found in the **Configuration backup** submenu.

Navigation

"Setup" menu → Advanced setup → Configuration backup

▶ Configuration backup	
Operating time	→ 📄 159
Last backup	→ 📄 159
Configuration management	→ 📄 159
Backup state	→ 📄 159
Comparison result	→ 📄 159

Parameter overview with brief description

Parameter	Description	User interface / Selection
Operating time	Indicates how long the device has been in operation.	Days (d), hours (h), minutes (m) and seconds (s)
Last backup	Shows when the last data backup was saved to HistoROM backup.	Days (d), hours (h), minutes (m) and seconds (s)
Configuration management	Select action for managing the device data in the HistoROM backup.	▪ Cancel ▪ Execute backup ▪ Restore ▪ Compare ▪ Clear backup data
Backup state	Shows the current status of data saving or restoring.	▪ None ▪ Backup in progress ▪ Restoring in progress ▪ Delete in progress ▪ Compare in progress ▪ Restoring failed ▪ Backup failed
Comparison result	Comparison of current device data with HistoROM backup.	▪ Settings identical ▪ Settings not identical ▪ No backup available ▪ Backup settings corrupt ▪ Check not done ▪ Dataset incompatible

Function scope of the "Configuration management" parameter

Options	Description
Cancel	No action is executed and the user exits the parameter.
Execute backup	A backup copy of the current device configuration is saved from the HistoROM backup to the memory of the device. The backup copy includes the transmitter data of the device.
Restore	The last backup copy of the device configuration is restored from the device memory to the device's HistoROM backup. The backup copy includes the transmitter data of the device.
Compare	The device configuration saved in the device memory is compared with the current device configuration of the HistoROM backup.
Clear backup data	The backup copy of the device configuration is deleted from the memory of the device.

HistoROM backup
A HistoROM is a "non-volatile" device memory in the form of an EEPROM.

While this action is in progress, the configuration cannot be edited via the local display and a message on the processing status appears on the display.

10.6.8 Using parameters for device administration

The **Administration** submenu systematically guides the user through all the parameters that can be used for device administration purposes.

Navigation
"Setup" menu → Advanced setup → Administration

▶ **Administration**		
	▶ **Define access code**	→ 📄 160
	▶ **Reset access code**	→ 📄 160
	Device reset	→ 📄 161

Using the parameter to define the access code

Navigation
"Setup" menu → Advanced setup → Administration → Define access code

▶ **Define access code**		
	Define access code	→ 📄 160
	Confirm access code	→ 📄 160

Parameter overview with brief description

Parameter	Description	User entry
Define access code	Restrict write-access to parameters to protect the configuration of the device against unintentional changes.	Max. 16-digit character string comprising numbers, letters and special characters
Confirm access code	Confirm the entered access code.	Max. 16-digit character string comprising numbers, letters and special characters

Using the parameter to reset the access code

Navigation
"Setup" menu → Advanced setup → Administration → Reset access code

▶ **Reset access code**		
	Operating time	→ 📄 161
	Reset access code	→ 📄 161

Parameter overview with brief description

Parameter	Description	User interface / User entry
Operating time	Indicates how long the device has been in operation.	Days (d), hours (h), minutes (m) and seconds (s)
Reset access code	Reset access code to factory settings. For a reset code, contact your Endress+Hauser service organization. The reset code can only be entered via: ▪ Web browser ▪ DeviceCare, FieldCare (via service interface CDI-RJ45) ▪ Fieldbus	Character string comprising numbers, letters and special characters

Using the parameter to reset the device

Navigation
"Setup" menu → Advanced setup → Administration

Parameter overview with brief description

Parameter	Description	Selection
Device reset	Reset the device configuration - either entirely or in part - to a defined state.	▪ Cancel ▪ To delivery settings ▪ Restart device ▪ Restore S-DAT backup

10.7 Simulation

The **Simulation** submenu enables you to simulate, without a real flow situation, various process variables in the process and the device alarm mode and to verify downstream signal chains (switching valves or closed-control loops).

Navigation
"Diagnostics" menu → Simulation

▶ Simulation	
Assign simulation process variable	→ 163
Process variable value	→ 163
Status input simulation	→ 163
Input signal level	→ 163
Current input 1 to n simulation	→ 163
Value current input 1 to n	→ 163
Current output 1 to n simulation	→ 163

Value current output 1 to n	→ 163
Frequency output simulation 1 to n	→ 163
Frequency value 1 to n	→ 163
Pulse output simulation 1 to n	→ 164
Pulse value 1 to n	→ 164
Switch output simulation 1 to n	→ 164
Switch status 1 to n	→ 164
Relay output 1 to n simulation	→ 164
Switch status 1 to n	→ 164
Device alarm simulation	→ 164
Diagnostic event category	→ 164
Diagnostic event simulation	→ 164

Parameter overview with brief description

Parameter	Prerequisite	Description	Selection / User entry / User interface
Assign simulation process variable	–	Select a process variable for the simulation process that is activated.	▪ Off ▪ Mass flow ▪ Volume flow ▪ Corrected volume flow ▪ Target mass flow * ▪ Carrier mass flow * ▪ Target volume flow * ▪ Carrier volume flow * ▪ Target corrected volume flow * ▪ Carrier corrected volume flow * ▪ Density ▪ Reference density ▪ Reference density alternative * ▪ GSV flow * ▪ GSV flow alternative * ▪ NSV flow * ▪ NSV flow alternative * ▪ S&W volume flow * ▪ Water cut * ▪ Oil density * ▪ Water density * ▪ Oil mass flow * ▪ Water mass flow * ▪ Oil volume flow * ▪ Water volume flow * ▪ Oil corrected volume flow * ▪ Water corrected volume flow * ▪ Weighted density average * ▪ Weighted temperature average * ▪ Temperature ▪ Concentration *
Process variable value	A process variable is selected in the **Assign simulation process variable** parameter (→ 🗎 163).	Enter the simulation value for the selected process variable.	Depends on the process variable selected
Status input simulation	–	Switch simulation of the status input on and off.	▪ Off ▪ On
Input signal level	In the **Status input simulation** parameter, the **On** option is selected.	Select the signal level for the simulation of the status input.	▪ High ▪ Low
Current input 1 to n simulation	–	Switch simulation of the current input on and off.	▪ Off ▪ On
Value current input 1 to n	In the **Current input 1 to n simulation** parameter, the **On** option is selected.	Enter the current value for simulation.	0 to 22.5 mA
Current output 1 to n simulation	–	Switch the simulation of the current output on and off.	▪ Off ▪ On
Value current output 1 to n	In the **Current output 1 to n simulation** parameter, the **On** option is selected.	Enter the current value for simulation.	3.59 to 22.5 mA
Frequency output simulation 1 to n	In the **Operating mode** parameter, the **Frequency** option is selected.	Switch the simulation of the frequency output on and off.	▪ Off ▪ On
Frequency value 1 to n	In the **Frequency output simulation 1 to n** parameter, the **On** option is selected.	Enter the frequency value for the simulation.	0.0 to 12 500.0 Hz

Parameter	Prerequisite	Description	Selection / User entry / User interface
Pulse output simulation 1 to n	In the **Operating mode** parameter, the **Pulse** option is selected.	Set and switch off the pulse output simulation. For **Fixed value** option: **Pulse width** parameter (→ 126) defines the pulse width of the pulses output.	▪ Off ▪ Fixed value ▪ Down-counting value
Pulse value 1 to n	In the **Pulse output simulation 1 to n** parameter, the **Down-counting value** option is selected.	Enter the number of pulses for simulation.	0 to 65 535
Switch output simulation 1 to n	In the **Operating mode** parameter, the **Switch** option is selected.	Switch the simulation of the switch output on and off.	▪ Off ▪ On
Switch status 1 to n	–	Select the status of the status output for the simulation.	▪ Open ▪ Closed
Relay output 1 to n simulation	–	Switch simulation of the relay output on and off.	▪ Off ▪ On
Switch status 1 to n	The **On** option is selected in the **Switch output simulation 1 to n** parameter parameter.	Select status of the relay output for the simulation.	▪ Open ▪ Closed
Pulse output simulation	–	Set and switch off the pulse output simulation. For **Fixed value** option: **Pulse width** parameter defines the pulse width of the pulses output.	▪ Off ▪ Fixed value ▪ Down-counting value
Pulse value	In the **Pulse output simulation** parameter, the **Down-counting value** option is selected.	Set and switch off the pulse output simulation.	0 to 65 535
Device alarm simulation	–	Switch the device alarm on and off.	▪ Off ▪ On
Diagnostic event category	–	Select a diagnostic event category.	▪ Sensor ▪ Electronics ▪ Configuration ▪ Process
Diagnostic event simulation	–	Select a diagnostic event to simulate this event.	▪ Off ▪ Diagnostic event picklist (depends on the category selected)
Logging interval	–	Define the logging interval tlog for data logging. This value defines the time interval between the individual data points in the memory.	1.0 to 3 600.0 s

* Visibility depends on order options or device settings

10.8 Protecting settings from unauthorized access

The following write protection options exist in order to protect the configuration of the measuring device from unintentional modification:
- Protect access to parameters via access code → 165
- Protect access to local operation via key locking → 80
- Protect access to measuring device via write protection switch → 166

10.8.1 Write protection via access code

The effects of the user-specific access code are as follows:
- Via local operation, the parameters for the measuring device configuration are write-protected and their values can no longer be changed.
- Device access is protected via the Web browser, as are the parameters for the measuring device configuration.
- Device access is protected via FieldCare or DeviceCare (via CDI-RJ45 service interface), as are the parameters for the measuring device configuration.

Defining the access code via local display

1. Navigate to the **Define access code** parameter (→ 🗎 160).
2. Define a max. 16-digit character string comprising numbers, letters and special characters as the access code.
3. Enter the access code again in the **Confirm access code** parameter (→ 🗎 160) to confirm the code.
   ↳ The 🔒-symbol appears in front of all write-protected parameters.

The device automatically locks the write-protected parameters again if a key is not pressed for 10 minutes in the navigation and editing view. The device locks the write-protected parameters automatically after 60 s if the user skips back to the operational display mode from the navigation and editing view.

- If parameter write protection is activated via an access code, it can also only be deactivated via this access code → 🗎 79.
- The user role with which the user is currently logged on via the local display is indicated by the → 🗎 79 **Access status** parameter. Navigation path: Operation → Access status

Parameters which can always be modified via the local display

Certain parameters that do not affect the measurement are excepted from parameter write protection via the local display. Despite the user-specific access code, they can always be modified, even if the other parameters are locked.

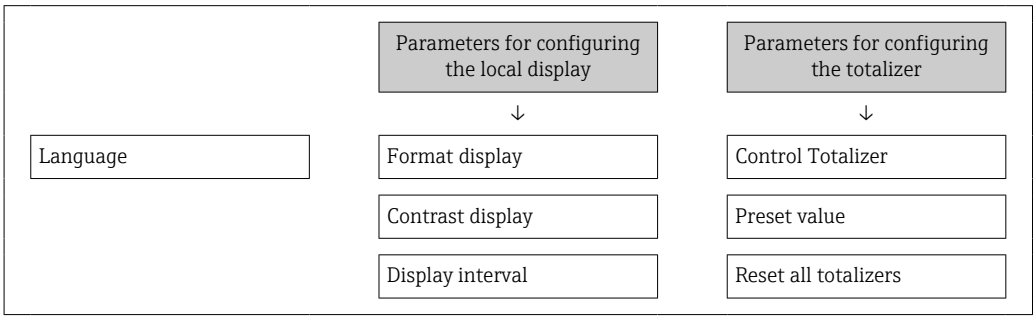

Defining the access code via the Web browser

1. Navigate to the **Define access code** parameter (→ 🗎 160).
2. Define a max. 16-digit numeric code as an access code.

3. Enter the access code again in the **Confirm access code** parameter (→ 🗎 160) to confirm the code.
   ↳ The Web browser switches to the login page.

If no action is performed for 10 minutes, the Web browser automatically returns to the login page.

- If parameter write protection is activated via an access code, it can also only be deactivated via this access code → 🗎 79.
- The user role with which the user is currently logged on via Web browser is indicated by the **Access status** parameter. Navigation path: Operation → Access status

Resetting the access code

If you misplace the user-specific access code, it is possible to reset the code to the factory setting. A reset code must be entered for this purpose. The user-specific access code can then be defined again afterwards.

Via Web browser, FieldCare, DeviceCare (via CDI-RJ45 service interface), fieldbus

For a reset code, contact your Endress+Hauser service organization.

1. Navigate to the **Reset access code** parameter (→ 🗎 161).
2. Enter the reset code.
   ↳ The access code has been reset to the factory setting **0000**. It can be redefined → 🗎 165.

10.8.2 Write protection via write protection switch

Unlike parameter write protection via a user-specific access code, this allows write access to the entire operating menu - except for the **"Contrast display" parameter** - to be locked.

The parameter values are now read only and cannot be edited any more (exception **"Contrast display" parameter**):
- Via local display
- Via EtherNet/IP protocol

Proline 500 – digital

⚠ WARNING

Excessive tightening torque applied to the fixing screws!
Risk of damaging the plastic transmitter.
▶ Tighten the fixing screws as per the tightening torque: 2 Nm (1.5 lbf ft)

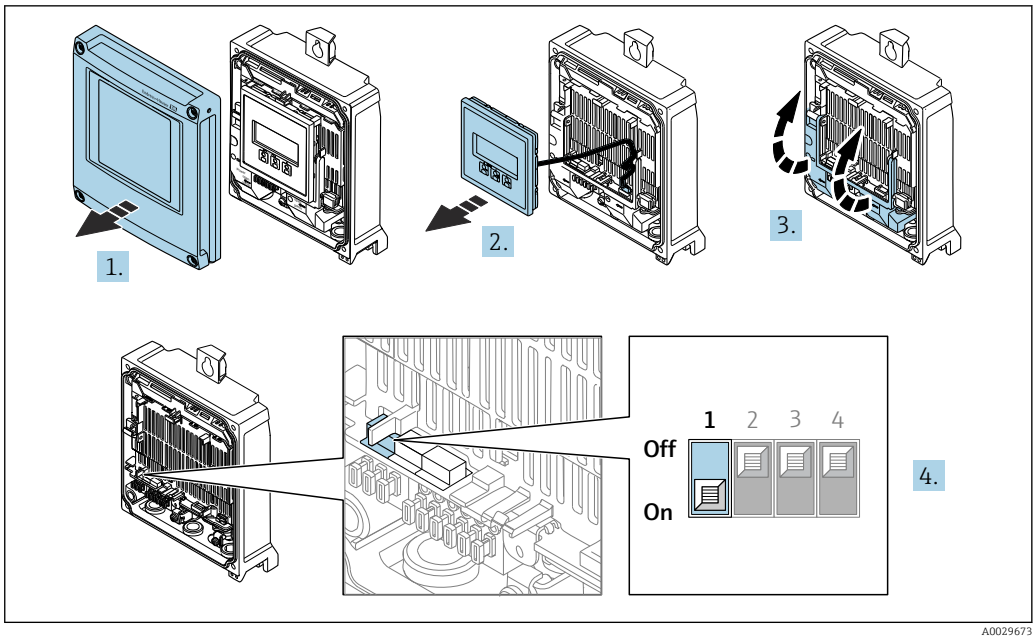

A0029673

1. Open the housing cover.
2. Remove the display module.
3. Fold open the terminal cover.
4. Setting the write protection (WP) switch on the main electronics module to the **ON** position enables hardware write protection.
   ↳ In the **Locking status** parameter the **Hardware locked** option is displayed → 📄 169. In addition, on the local display the 🔒-symbol appears in front of the parameters in the header of the operational display and in the navigation view.

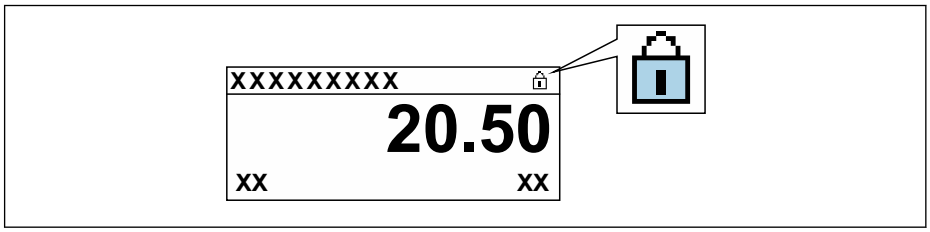

A0029425

5. Setting the write protection (WP) switch on the main electronics module to the **OFF** position (factory setting) disables hardware write protection.
   ↳ No option is displayed in the **Locking status** parameter → 📄 169. On the local display, the 🔒-symbol disappears from in front of the parameters in the header of the operational display and in the navigation view.

Proline 500

1. 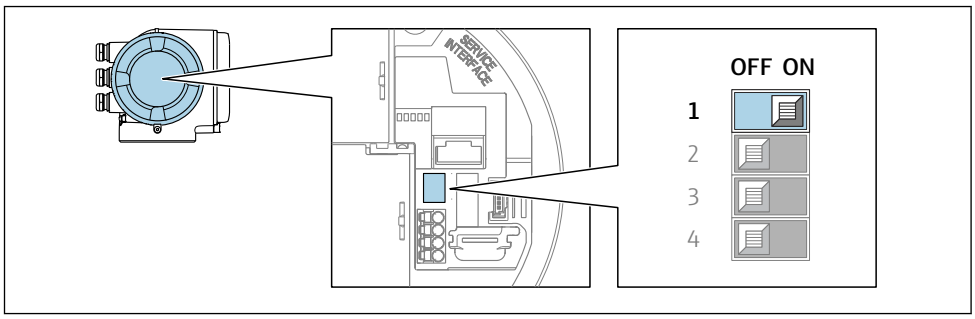

A0029630

Setting the write protection (WP) switch on the main electronics module to the **ON** position enables hardware write protection.

↳ In the **Locking status** parameter the **Hardware locked** option is displayed → 📄 169. In addition, on the local display the 🔒-symbol appears in front of the parameters in the header of the operational display and in the navigation view.

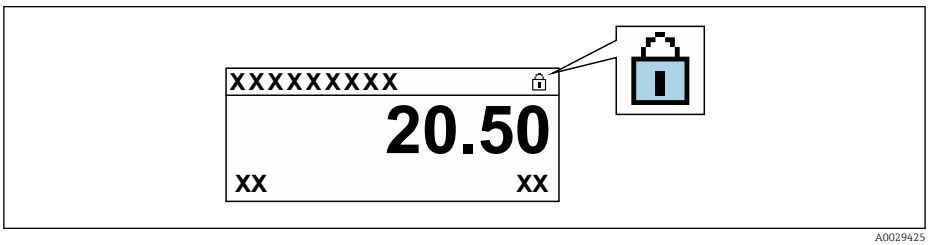

A0029425

2. Setting the write protection (WP) switch on the main electronics module to the **OFF** position (factory setting) disables hardware write protection.

↳ No option is displayed in the **Locking status** parameter → 📄 169. On the local display, the 🔒-symbol disappears from in front of the parameters in the header of the operational display and in the navigation view.

11 Operation

11.1 Reading the device locking status

Device active write protection: **Locking status** parameter

Operation → Locking status

Function scope of the "Locking status" parameter

Options	Description
None	The access status displayed in the **Access status** parameter applies → 🗎 79. Only appears on local display.
Hardware locked	The DIP switch for hardware locking is activated on the PCB board. This locks write access to the parameters (e.g. via local display or operating tool) .
Temporarily locked	Write access to the parameters is temporarily locked on account of internal processes running in the device (e.g. data upload/download, reset etc.). Once the internal processing has been completed, the parameters can be changed once again.

11.2 Adjusting the operating language

Detailed information:
- To configure the operating language → 🗎 111
- For information on the operating languages supported by the measuring device → 🗎 240

11.3 Configuring the display

Detailed information:
- On the basic settings for the local display → 🗎 136
- On the advanced settings for the local display → 🗎 150

11.4 Reading measured values

With the **Measured values** submenu, it is possible to read all the measured values.

Navigation
"Diagnostics" menu → Measured values

▶ **Measured values**	
▶ **Measured variables**	→ 🗎 170
▶ **Input values**	→ 🗎 172
▶ **Output values**	→ 🗎 173
▶ **Totalizer**	→ 🗎 171

11.4.1 "Measured variables" submenu

The **Measured variables** submenu contains all the parameters needed to display the current measured values for each process variable.

Navigation
"Diagnostics" menu → Measured values → Measured variables

▶ Measured variables	
Mass flow	→ 170
Volume flow	→ 170
Corrected volume flow	→ 170
Density	→ 170
Reference density	→ 171
Temperature	→ 171
Pressure value	→ 171
Concentration	→ 171
Target mass flow	→ 171
Carrier mass flow	→ 171

Parameter overview with brief description

Parameter	Prerequisite	Description	User interface
Mass flow	–	Displays the mass flow currently measured. *Dependency* The unit is taken from the **Mass flow unit** parameter (→ 114).	Signed floating-point number
Volume flow	–	Displays the volume flow currently calculated. *Dependency* The unit is taken from the **Volume flow unit** parameter (→ 114).	Signed floating-point number
Corrected volume flow	–	Displays the corrected volume flow currently calculated. *Dependency* The unit is taken from the **Corrected volume flow unit** parameter (→ 114).	Signed floating-point number
Density	–	Shows the density currently measured. *Dependency* The unit is taken from the **Density unit** parameter (→ 114).	Signed floating-point number

Parameter	Prerequisite	Description	User interface
Reference density	–	Displays the reference density currently calculated. *Dependency* The unit is taken from the **Reference density unit** parameter (→ 🗎 114).	Signed floating-point number
Temperature	–	Shows the medium temperature currently measured. *Dependency* The unit is taken from the **Temperature unit** parameter (→ 🗎 115).	Signed floating-point number
Pressure value	–	Displays either a fixed or external pressure value. *Dependency* The unit is taken from the **Pressure unit** parameter (→ 🗎 115).	Signed floating-point number
Concentration	For the following order code: Order code for "Application package", option **ED** "Concentration" ℹ The software options currently enabled are displayed in the **Software option overview** parameter.	Displays the concentration currently calculated. *Dependency* The unit is taken from the **Concentration unit** parameter.	Signed floating-point number
Target mass flow	With the following conditions: Order code for "Application package", option **ED** "Concentration" ℹ The software options currently enabled are displayed in the **Software option overview** parameter.	Displays the mass flow currently measured for the target medium. *Dependency* The unit is taken from the **Mass flow unit** parameter (→ 🗎 114).	Signed floating-point number
Carrier mass flow	With the following conditions: Order code for "Application package", option **ED** "Concentration" ℹ The software options currently enabled are displayed in the **Software option overview** parameter.	Displays the mass flow currently measured for the carrier medium. *Dependency* The unit is taken from the **Mass flow unit** parameter (→ 🗎 114).	Signed floating-point number

11.4.2 "Totalizer" submenu

The **Totalizer** submenu contains all the parameters needed to display the current measured values for every totalizer.

Navigation

"Diagnostics" menu → Measured values → Totalizer

▶ Totalizer	
Totalizer value 1 to n	→ 🗎 172
Totalizer overflow 1 to n	→ 🗎 172

Parameter overview with brief description

Parameter	Prerequisite	Description	User interface
Totalizer value 1 to n	A process variable is selected in the **Assign process variable** parameter (→ 🗎 148) of the **Totalizer 1 to n** submenu.	Displays the current totalizer counter value.	Signed floating-point number
Totalizer overflow 1 to n	A process variable is selected in the **Assign process variable** parameter (→ 🗎 148) of the **Totalizer 1 to n** submenu.	Displays the current totalizer overflow.	Integer with sign

11.4.3 "Input values" submenu

The **Input values** submenu guides you systematically to the individual input values.

Navigation

"Diagnostics" menu → Measured values → Input values

▶ **Input values**	
▶ **Current input 1 to n**	→ 🗎 172
▶ **Status input 1 to n**	→ 🗎 172

Input values of current input

The **Current input 1 to n** submenu contains all the parameters needed to display the current measured values for every current input.

Navigation

"Diagnostics" menu → Measured values → Input values → Current input 1 to n

▶ **Current input 1 to n**	
Measured values 1 to n	→ 🗎 172
Measured current 1 to n	→ 🗎 172

Parameter overview with brief description

Parameter	Description	User interface
Measured values 1 to n	Displays the current input value.	Signed floating-point number
Measured current 1 to n	Displays the current value of the current input.	0 to 22.5 mA

Input values of status input

The **Status input 1 to n** submenu contains all the parameters needed to display the current measured values for every status input.

Navigation
"Diagnostics" menu → Measured values → Input values → Status input 1 to n

▶ **Status input 1 to n**		
	Value status input	→ 📄 173

Parameter overview with brief description

Parameter	Description	User interface
Value status input	Shows the current input signal level.	▪ High ▪ Low

11.4.4 Output values

The **Output values** submenu contains all the parameters needed to display the current measured values for every output.

Navigation
"Diagnostics" menu → Measured values → Output values

▶ **Output values**		
	▶ **Current output 1 to n**	→ 📄 173
	▶ **Pulse/frequency/switch output 1 to n**	→ 📄 174
	▶ **Relay output 1 to n**	→ 📄 174

Output values of current output

The **Value current output** submenu contains all the parameters needed to display the current measured values for every current output.

Navigation
"Diagnostics" menu → Measured values → Output values → Value current output 1 to n

▶ **Current output 1 to n**		
	Output current 1 to n	→ 📄 174
	Measured current 1 to n	→ 📄 174

Parameter overview with brief description

Parameter	Description	User interface
Output current 1	Displays the current value currently calculated for the current output.	3.59 to 22.5 mA
Measured current	Displays the current value currently measured for the current output.	0 to 30 mA

Output values for pulse/frequency/switch output

The **Pulse/frequency/switch output 1 to n** submenu contains all the parameters needed to display the current measured values for every pulse/frequency/switch output.

Navigation
"Diagnostics" menu → Measured values → Output values → Pulse/frequency/switch output 1 to n

▶ **Pulse/frequency/switch output 1 to n**	
Output frequency 1 to n	→ 📄 174
Pulse output 1 to n	→ 📄 174
Switch status 1 to n	→ 📄 174

Parameter overview with brief description

Parameter	Prerequisite	Description	User interface
Output frequency 1 to n	In the **Operating mode** parameter, the **Frequency** option is selected.	Displays the value currently measured for the frequency output.	0.0 to 12 500.0 Hz
Pulse output 1 to n	The **Pulse** option is selected in the **Operating mode** parameter parameter.	Displays the pulse frequency currently output.	Positive floating-point number
Switch status 1 to n	The **Switch** option is selected in the **Operating mode** parameter.	Displays the current switch output status.	▪ Open ▪ Closed

Output values for relay output

The **Relay output 1 to n** submenu contains all the parameters needed to display the current measured values for every relay output.

Navigation
"Diagnostics" menu → Measured values → Output values → Relay output 1 to n

▶ **Relay output 1 to n**	
Switch status	→ 📄 175
Switch cycles	→ 📄 175
Max. switch cycles number	→ 📄 175

Parameter overview with brief description

Parameter	Description	User interface
Switch status	Shows the current relay switch status.	▪ Open ▪ Closed
Switch cycles	Shows number of all performed switch cycles.	Positive integer
Max. switch cycles number	Shows the maximal number of guaranteed switch cycles.	Positive integer

11.5 Adapting the measuring device to the process conditions

The following are available for this purpose:
- Basic settings using the**Setup** menu (→ 🗎 112)
- Advanced settings using the**Advanced setup** submenu (→ 🗎 144)

11.6 Performing a totalizer reset

Navigation
"Operation" menu → Totalizer handling

▶ **Totalizer handling**

Control Totalizer 1 to n	→ 🗎 175
Preset value 1 to n	→ 🗎 175
Reset all totalizers	→ 🗎 175

Parameter overview with brief description

Parameter	Prerequisite	Description	Selection / User entry	Factory setting
Control Totalizer 1 to n	A process variable is selected in the **Assign process variable** parameter (→ 🗎 148) of the **Totalizer 1 to n** submenu.	Control totalizer value.	▪ Totalize ▪ Reset + hold ▪ Preset + hold ▪ Reset + totalize ▪ Preset + totalize ▪ Hold	–
Preset value 1 to n	A process variable is selected in the **Assign process variable** parameter (→ 🗎 148) of the **Totalizer 1 to n** submenu.	Specify start value for totalizer. *Dependency* ℹ The unit of the selected process variable is specified for the totalizer in the **Unit totalizer** parameter (→ 🗎 148).	Signed floating-point number	Country-specific: ▪ 0 kg ▪ 0 lb
Reset all totalizers	–	Reset all totalizers to 0 and start.	▪ Cancel ▪ Reset + totalize	–

11.6.1 Function scope of the "Control Totalizer" parameter

Options	Description
Totalize	The totalizer is started or continues running.
Reset + hold	The totaling process is stopped and the totalizer is reset to 0.
Preset + hold	The totaling process is stopped and the totalizer is set to its defined start value from the **Preset value** parameter.
Reset + totalize	The totalizer is reset to 0 and the totaling process is restarted.
Preset + totalize	The totalizer is set to the defined start value from the **Preset value** parameter and the totaling process is restarted.
Hold	Totalizing is stopped.

11.6.2 Function scope of the "Reset all totalizers" parameter

Options	Description
Cancel	No action is executed and the user exits the parameter.
Reset + totalize	Resets all totalizers to 0 and restarts the totaling process. This deletes all the flow values previously totalized.

11.7 Showing data logging

The **Extended HistoROM** application package must be enabled in the device (order option) for the **Data logging** submenu to appear. This contains all the parameters for the measured value history.

Data logging is also available via:
- Plant Asset Management Tool FieldCare → 📄 92.
- Web browser

Function range
- A total of 1000 measured values can be stored
- 4 logging channels
- Adjustable logging interval for data logging
- Display of the measured value trend for each logging channel in the form of a chart

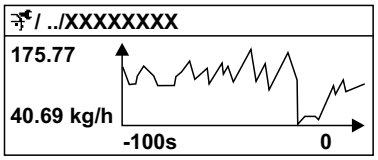

A0016357

35 Chart of a measured value trend

- x-axis: depending on the number of channels selected displays 250 to 1000 measured values of a process variable.
- y-axis: displays the approximate measured value span and constantly adapts this to the ongoing measurement.

If the length of the logging interval or the assignment of the process variables to the channels is changed, the content of the data logging is deleted.

Navigation
"Diagnostics" menu → Data logging

▶ **Data logging**	
Assign channel 1	→ 📄 178
Assign channel 2	→ 📄 178
Assign channel 3	→ 📄 178
Assign channel 4	→ 📄 179
Logging interval	→ 📄 179
Clear logging data	→ 📄 179
Data logging	→ 📄 179
Logging delay	→ 📄 179
Data logging control	→ 📄 179
Data logging status	→ 📄 179
Entire logging duration	→ 📄 179
▶ **Display channel 1**	
▶ **Display channel 2**	
▶ **Display channel 3**	
▶ **Display channel 4**	

Parameter overview with brief description

Parameter	Prerequisite	Description	Selection / User entry / User interface
Assign channel 1	The **Extended HistoROM** application package is available.	Assign process variable to logging channel.	▪ Off ▪ Mass flow ▪ Volume flow ▪ Corrected volume flow ▪ Target mass flow * ▪ Carrier mass flow * ▪ Target volume flow * ▪ Carrier volume flow * ▪ Target corrected volume flow * ▪ Carrier corrected volume flow * ▪ Density ▪ Reference density ▪ Reference density alternative * ▪ GSV flow * ▪ GSV flow alternative * ▪ NSV flow * ▪ NSV flow alternative * ▪ S&W volume flow * ▪ Water cut * ▪ Oil density * ▪ Water density * ▪ Oil mass flow * ▪ Water mass flow * ▪ Oil volume flow * ▪ Water volume flow * ▪ Oil corrected volume flow * ▪ Water corrected volume flow * ▪ Concentration * ▪ Temperature ▪ Carrier pipe temperature * ▪ Electronic temperature ▪ Oscillation frequency 0 ▪ Oscillation amplitude * ▪ Frequency fluctuation 0 ▪ Oscillation damping 0 ▪ Oscillation damping fluctuation 0 ▪ Signal asymmetry ▪ Exciter current 0 ▪ HBSI * ▪ Current output 1 ▪ Current output 2 * ▪ Current output 3 * ▪ Current output 4 * ▪ Pressure
Assign channel 2	The **Extended HistoROM** application package is available. The software options currently enabled are displayed in the **Software option overview** parameter.	Assign process variable to logging channel.	Picklist, see **Assign channel 1** parameter (→ 178)
Assign channel 3	The **Extended HistoROM** application package is available. The software options currently enabled are displayed in the **Software option overview** parameter.	Assign process variable to logging channel.	Picklist, see **Assign channel 1** parameter (→ 178)

Parameter	Prerequisite	Description	Selection / User entry / User interface
Assign channel 4	The **Extended HistoROM** application package is available. The software options currently enabled are displayed in the **Software option overview** parameter.	Assign process variable to logging channel.	Picklist, see **Assign channel 1** parameter (→ 178)
Logging interval	The **Extended HistoROM** application package is available.	Define the logging interval for data logging. This value defines the time interval between the individual data points in the memory.	0.1 to 3 600.0 s
Clear logging data	The **Extended HistoROM** application package is available.	Clear the entire logging data.	▪ Cancel ▪ Clear data
Data logging	–	Select the data logging method.	▪ Overwriting ▪ Not overwriting
Logging delay	In the **Data logging** parameter, the **Not overwriting** option is selected.	Enter the time delay for measured value logging.	0 to 999 h
Data logging control	In the **Data logging** parameter, the **Not overwriting** option is selected.	Start and stop measured value logging.	▪ None ▪ Delete + start ▪ Stop
Data logging status	In the **Data logging** parameter, the **Not overwriting** option is selected.	Displays the measured value logging status.	▪ Done ▪ Delay active ▪ Active ▪ Stopped
Entire logging duration	In the **Data logging** parameter, the **Not overwriting** option is selected.	Displays the total logging duration.	Positive floating-point number

* Visibility depends on order options or device settings

12 Diagnostics and troubleshooting

12.1 General troubleshooting

For local display

Error	Possible causes	Solution
Local display dark and no output signals	Supply voltage does not match the value indicated on the nameplate.	Apply the correct supply voltage .
Local display dark and no output signals	The polarity of the supply voltage is wrong.	Correct the polarity.
Local display dark and no output signals	No contact between connecting cables and terminals.	Check the connection of the cables and correct if necessary.
Local display dark and no output signals	Terminals are not plugged into the I/O electronics module correctly. Terminals are not plugged into the main electronics module correctly.	Check terminals.
Local display dark and no output signals	I/O electronics module is defective. Main electronics module is defective.	Order spare part → 🗎 213.
Local display dark and no output signals	The connector between the main electronics module and display module is not plugged in correctly.	Check the connection and correct if necessary.
Local display dark and no output signals	The connecting cable is not plugged in correctly.	1. Check the connection of the electrode cable and correct if necessary. 2. Check the connection of the coil current cable and correct if necessary.
Local display is dark, but signal output is within the valid range	Display is set too bright or too dark.	▪ Set the display brighter by simultaneously pressing ⊞ + Ⓔ. ▪ Set the display darker by simultaneously pressing ⊟ + Ⓔ.
Local display is dark, but signal output is within the valid range	The cable of the display module is not plugged in correctly.	Insert the plug correctly into the main electronics module and display module.
Local display is dark, but signal output is within the valid range	Display module is defective.	Order spare part → 🗎 213.
Backlighting of local display is red	Diagnostic event with "Alarm" diagnostic behavior has occurred.	Take remedial measures → 🗎 192
Text on local display appears in a foreign language and cannot be understood.	Incorrect operating language is configured.	1. Press ⊟ + ⊞ for 2 s ("home position"). 2. Press Ⓔ. 3. Set the desired language in the **Display language** parameter (→ 🗎 156).
Message on local display: "Communication Error" "Check Electronics"	Communication between the display module and the electronics is interrupted.	▪ Check the cable and the connector between the main electronics module and display module. ▪ Order spare part → 🗎 213.

For output signals

Error	Possible causes	Solution
Signal output outside the valid range	Main electronics module is defective.	Order spare part → 🗎 213.
Device shows correct value on local display, but signal output is incorrect, though in the valid range.	Configuration error	Check and correct the parameter configuration.
Device measures incorrectly.	Configuration error or device is operated outside the application.	1. Check and correct parameter configuration. 2. Observe limit values specified in the "Technical Data".

For access

Error	Possible causes	Solution
No write access to parameters	Hardware write protection enabled	Set the write protection switch on main electronics module to the **OFF** position → 🗎 166.
No write access to parameters	Current user role has limited access authorization	1. Check user role → 🗎 79. 2. Enter correct customer-specific access code → 🗎 79.
No connection via EtherNet/IP	Device plug connected incorrectly	Check the pin assignment of the connector .
Not connecting to Web server	Web server disabled	Using the "FieldCare" or "DeviceCare" operating tool, check whether the Web server of the measuring device is enabled, and enable it if necessary→ 🗎 87.
	Incorrect setting for the Ethernet interface of the computer	1. Check the properties of the Internet protocol (TCP/IP) → 🗎 82→ 🗎 83. 2. Check the network settings with the IT manager.
Not connecting to Web server	▪ Incorrect IP address ▪ IP address is not known	1. If addressing via hardware: open the transmitter and check the IP address configured (last octet). 2. Check the IP address of the measuring device with the network manager. 3. If the IP address is not known, set DIP switch no. 10 to ON, restart the device and enter the factory IP address 192.168.1.212. ℹ EtherNet/IP communication is interrupted by enabling the DIP switch.
	Web browser setting "Use a Proxy Server for Your LAN" is enabled	Disable the use of the proxy server in the Web browser settings of the computer. Using the example of MS Internet Explorer: 1. Under *Control Panel* open *Internet options*. 2. Select the *Connections* tab and then double-click *LAN settings*. 3. In the *LAN settings* disable the use of the proxy server and select *OK* to confirm.

Error	Possible causes	Solution
	Apart from the active network connection to the measuring device, other network connections are also being used.	▪ Make sure that no other network connections are established by the computer (also no WLAN) and close other programs with network access to the computer. ▪ If using a docking station for notebooks, make sure that a network connection to another network is not active.
Not connecting to Web server	Incorrect WLAN access data	▪ Check WLAN network status. ▪ Log on to the device again using WLAN access data. ▪ Verify that WLAN is enabled on the measuring device and operating device → 🗎 82.
	WLAN communication disabled	–
Not connecting to Web server, FieldCare or DeviceCare	No WLAN network available	▪ Check if WLAN reception is present: LED on display module is lit blue ▪ Check if WLAN connection is enabled: LED on display module flashes blue ▪ Switch on instrument function.
Network connection not present or unstable	WLAN network is weak.	▪ Operating device is outside of reception range: Check network status on operating device. ▪ To improve network performance, use an external WLAN antenna.
	Parallel WLAN and Ethernet communication	▪ Check network settings. ▪ Temporarily enable only the WLAN as an interface.
Web browser frozen and operation no longer possible	Data transfer active	Wait until data transfer or current action is finished.
	Connection lost	1. Check cable connection and power supply. 2. Refresh the Web browser and restart if necessary.
Content of Web browser incomplete or difficult to read	Not using optimum version of Web server.	1. Use the correct Web browser version → 🗎 81. 2. Clear the Web browser cache and restart the Web browser.
	Unsuitable view settings.	Change the font size/display ratio of the Web browser.
No or incomplete display of contents in the Web browser	▪ JavaScript not enabled ▪ JavaScript cannot be enabled	1. Enable JavaScript. 2. Enter http://XXX.XXX.X.XXX/basic.html as the IP address.
Operation with FieldCare or DeviceCare via CDI-RJ45 service interface (port 8000)	Firewall of computer or network is preventing communication	Depending on the settings of the firewall used on the computer or in the network, the firewall must be adapted or disabled to allow FieldCare/DeviceCare access.
Flashing of firmware with FieldCare or DeviceCare via CDI-RJ45 service interface (via port 8000 or TFTP ports)	Firewall of computer or network is preventing communication	Depending on the settings of the firewall used on the computer or in the network, the firewall must be adapted or disabled to allow FieldCare/DeviceCare access.

12.2 Diagnostic information via light emitting diodes

12.2.1 Transmitter

Proline 500 – digital

Different LEDs in the transmitter provide information on the device status.

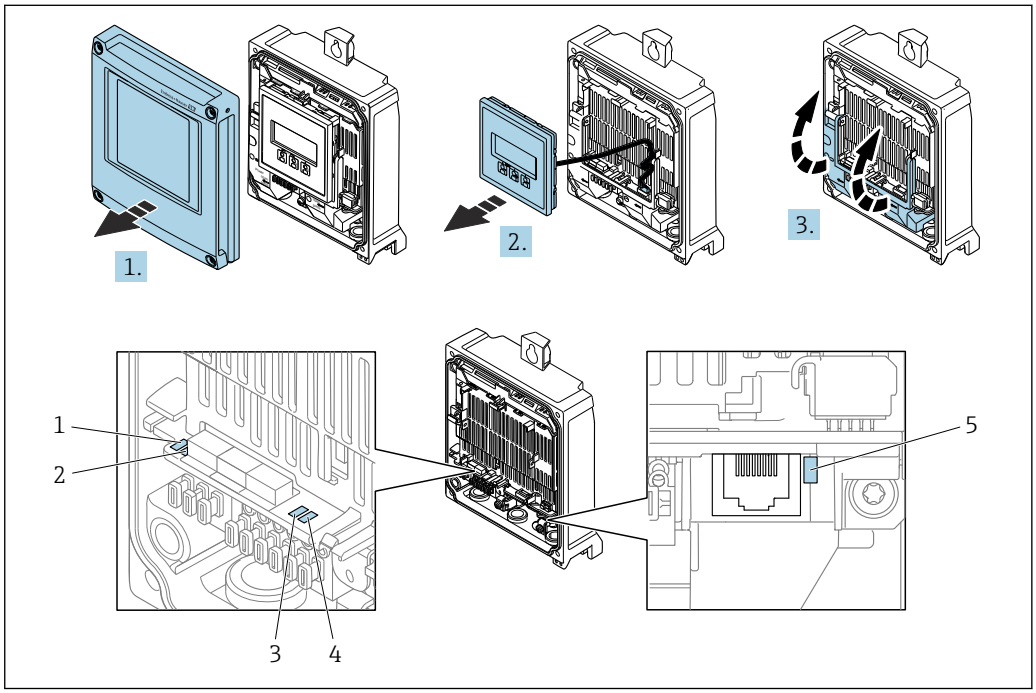

1 *Supply voltage*
2 *Device status*
3 *network status*
4 *Port 1 active: EtherNet/IP*
5 *Port 2 active: EtherNet/IP and service interface (CDI)*

1. Open the housing cover.
2. Remove the display module.
3. Fold open the terminal cover.

LED		Color	Meaning
1	Supply voltage	Off	Supply voltage is off or too low.
		Green	Supply voltage is ok.
2	Device status/module status (normal operation)	Off	Firmware error
		Green	Device status is ok.
		Flashing green	Device is not configured.
		Flashing red	A diagnostic event with "Warning" diagnostic behavior has occurred.
		Red	A diagnostic event with "Alarm" diagnostic behavior has occurred.
		Flashing red/green	The device restarts/self-test.
2	Device status/module status (during start-up)	Flashes red slowly	If > 30 seconds: problem with the boot loader.
		Flashes red quickly	If > 30 seconds: compatibility problem when reading the firmware.
3	Network status	Off	The device does not have an EtherNet/IP address.

LED	Color	Meaning
	Green	EtherNet/IP connection is active.
	Flashing green	The device has an Ethernet/IP address but no EtherNet/IP connection is active.
	Red	The EtherNet/IP address of the device has been assigned twice.
	Flashing red	EtherNet/IP connection is in the "time out" mode.
	Flashing red/green	The device restarts/self-test.
4 Port 1 active: Ethernet/IP	Off	Not connected or no connection established.
	White	Connected and connection established.
	Flashing white	Communication not active.
5 Port 2 active: Ethernet/IP and service interface (CDI)	Off	Not connected or no connection established.
	Yellow	Connected and connection established.
	Flashing yellow	Communication not active.

Proline 500

Different LEDs in the transmitter provide information on the device status.

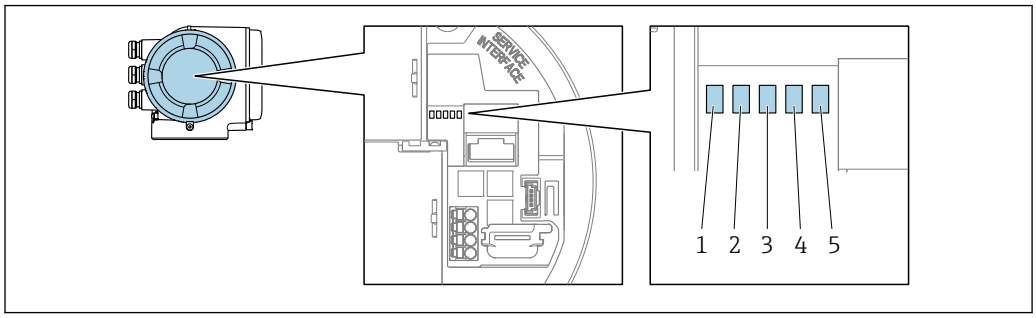

A0029629

1 *Supply voltage*
2 *Device status*
3 *network status*
4 *Port 1 active: EtherNet/IP*
5 *Port 2 active: EtherNet/IP and service interface (CDI)*

LED	Color	Meaning
1 Supply voltage	Off	Supply voltage is off or too low.
	Green	Supply voltage is ok.
2 Device status/module status (normal operation)	Off	Firmware error.
	Green	Device status is ok.
	Flashing green	Device is not configured.
	Flashing red	A diagnostic event with "Warning" diagnostic behavior has occurred.
	Red	A diagnostic event with "Alarm" diagnostic behavior has occurred.
	Flashing red/green	The device restarts/self-test.
2 Device status/module status (during start-up)	Flashes red slowly	If > 30 seconds: problem with the boot loader.
	Flashes red quickly	If > 30 seconds: compatibility problem when reading the firmware.
3 Network status	Off	The device does not have an EtherNet/IP address.
	Green	EtherNet/IP connection is active.

LED		Color	Meaning
		Flashing green	The device has an Ethernet/IP address but no EtherNet/IP connection is active.
		Red	The EtherNet/IP address of the device has been assigned twice.
		Flashing red	EtherNet/IP connection is in the "time out" mode.
		Flashing red/green	The device restarts/self-test.
4	Port 1 active: Ethernet/IP	Off	Not connected or no connection established.
		White	Connected and connection established.
		Flashing white	Communication not active.
5	Port 2 active: Ethernet/IP and service interface (CDI)	Off	Not connected or no connection established.
		Yellow	Connected and connection established.
		Flashing yellow	Communication not active.

12.2.2 Sensor connection housing

Proline 500 – digital

Various light emitting diodes (LED) on the ISEM electronics (Intelligent Sensor Electronic Module) in the sensor connection housing provide information on the device status.

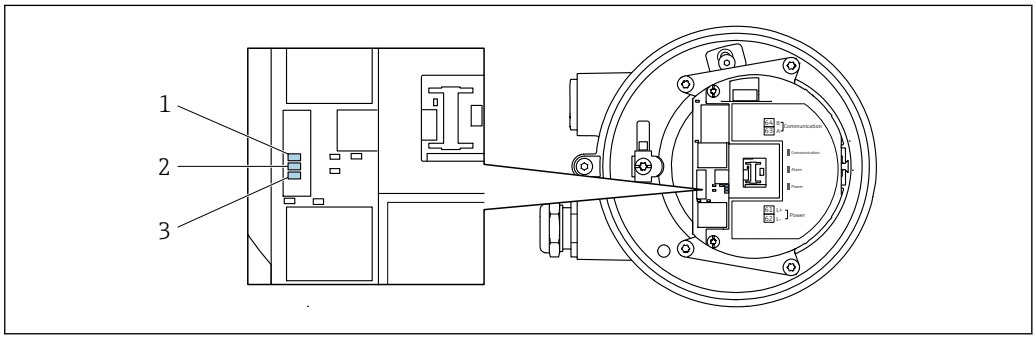

A0029699

1 Communication
2 Device status
3 Supply voltage

LED		Color	Meaning
1	Communication	White	Communication active.
2	Device status (normal operation)	Red	Problem
		Flashing red	Warning
2	Device status (during start-up)	Flashes red slowly	If > 30 seconds: problem with the boot loader.
		Flashes red quickly	If > 30 seconds: compatibility problem when reading the firmware.
3	Supply voltage	Green	Supply voltage is ok.
		Off	Supply voltage is off or too low.

12.3 Diagnostic information on local display

12.3.1 Diagnostic message

Faults detected by the self-monitoring system of the measuring device are displayed as a diagnostic message in alternation with the operational display.

Operational display in alarm condition	Diagnostic message

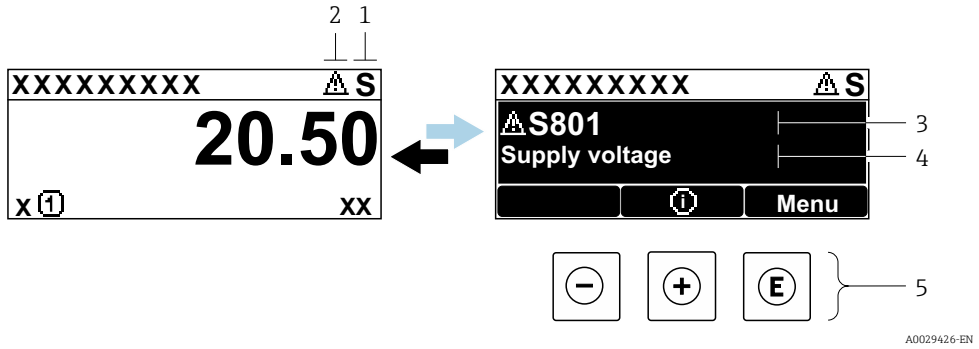

1 *Status signal*
2 *Diagnostic behavior*
3 *Diagnostic behavior with diagnostic code*
4 *Short text*
5 *Operating elements*

If two or more diagnostic events are pending simultaneously, only the message of the diagnostic event with the highest priority is shown.

Other diagnostic events that have occurred can be displayed in the **Diagnostics** menu:
- Via parameter → 205
- Via submenus → 206

Status signals

The status signals provide information on the state and reliability of the device by categorizing the cause of the diagnostic information (diagnostic event).

The status signals are categorized according to VDI/VDE 2650 and NAMUR Recommendation NE 107: F = Failure, C = Function Check, S = Out of Specification, M = Maintenance Required

Symbol	Meaning
F	**Failure** A device error has occurred. The measured value is no longer valid.
C	**Function check** The device is in service mode (e.g. during a simulation).
S	**Out of specification** The device is operated: Outside its technical specification limits (e.g. outside the process temperature range)
M	**Maintenance required** Maintenance is required. The measured value remains valid.

Diagnostic behavior

Symbol	Meaning
⊗	**Alarm** ▪ Measurement is interrupted. ▪ Signal outputs and totalizers assume the defined alarm condition. ▪ A diagnostic message is generated.
⚠	**Warning** Measurement is resumed. The signal outputs and totalizers are not affected. A diagnostic message is generated.

Diagnostic information

The fault can be identified using the diagnostic information. The short text helps you by providing information about the fault. In addition, the corresponding symbol for the diagnostic behavior is displayed in front of the diagnostic information on the local display.

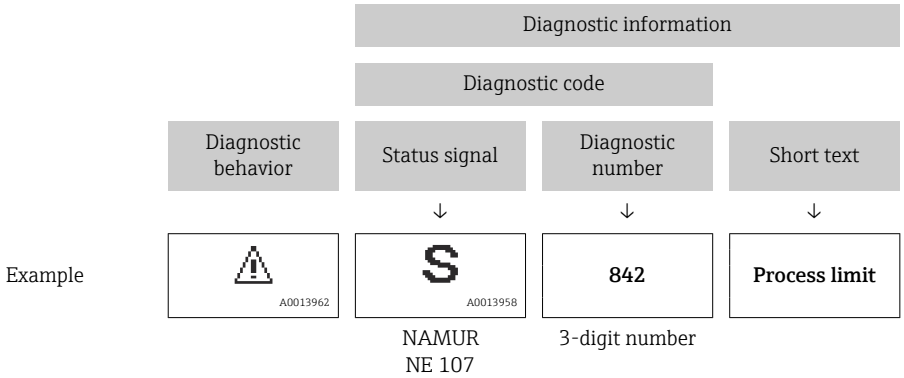

Operating elements

Key	Meaning
⊕	**Plus key** *In a menu, submenu* Opens the message about remedy information.
Ⓔ	**Enter key** *In a menu, submenu* Opens the operating menu.

12.3.2 Calling up remedial measures

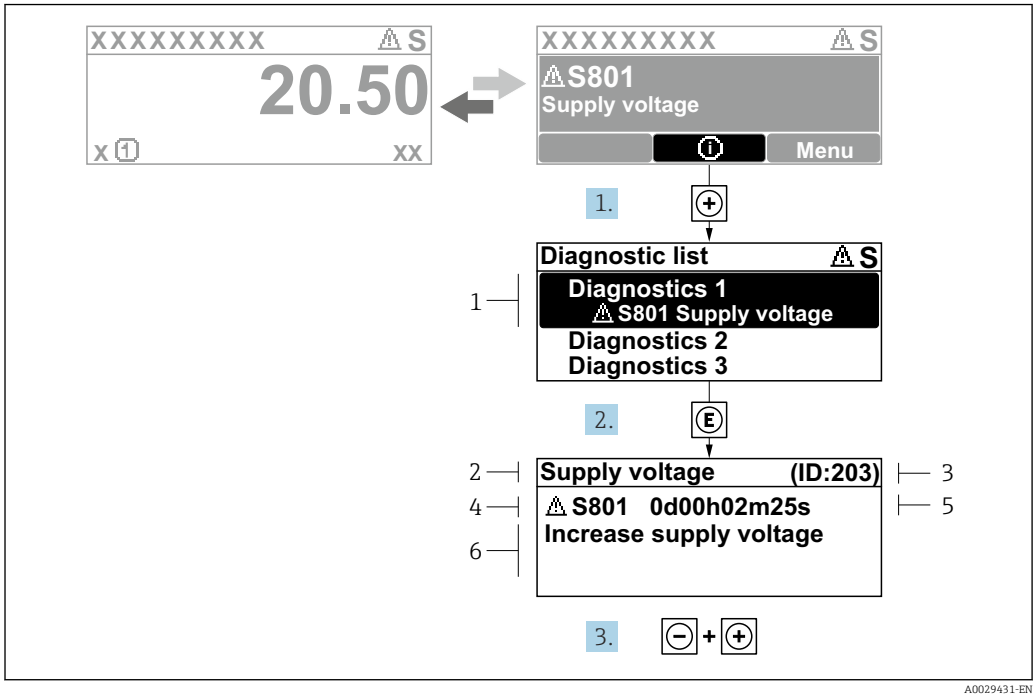

36 *Message about remedial measures*

1 *Diagnostic information*
2 *Short text*
3 *Service ID*
4 *Diagnostic behavior with diagnostic code*
5 *Operation time of occurrence*
6 *Remedial measures*

1. The user is in the diagnostic message.
   Press ⊞ (ⓘ symbol).
   ↳ The **Diagnostic list** submenu opens.
2. Select the desired diagnostic event with ⊞ or ⊟ and press Ⓔ .
   ↳ The message about the remedial measures opens.
3. Press ⊟ + ⊞ simultaneously.
   ↳ The message about the remedial measures closes.

The user is in the **Diagnostics** menu at an entry for a diagnostics event, e.g. in the **Diagnostic list** submenu or **Previous diagnostics** parameter.

1. Press Ⓔ.
   ↳ The message for the remedial measures for the selected diagnostic event opens.
2. Press ⊟ + ⊞ simultaneously.
   ↳ The message for the remedial measures closes.

12.4 Diagnostic information in the Web browser

12.4.1 Diagnostic options

Any faults detected by the measuring device are displayed in the Web browser on the home page once the user has logged on.

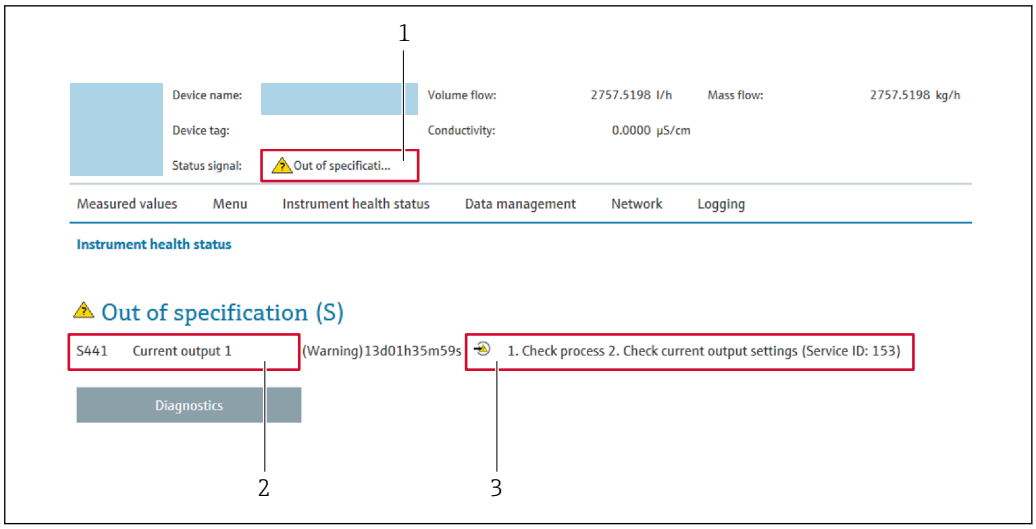

A0031056

1 *Status area with status signal*
2 *Diagnostic information*
3 *Remedy information with Service ID*

In addition, diagnostic events which have occurred can be shown in the **Diagnostics** menu:
- Via parameter → 📄 205
- Via submenu → 📄 206

Status signals

The status signals provide information on the state and reliability of the device by categorizing the cause of the diagnostic information (diagnostic event).

Symbol	Meaning
⊗	**Failure** A device error has occurred. The measured value is no longer valid.
▽	**Function check** The device is in service mode (e.g. during a simulation).
⚠	**Out of specification** The device is operated: Outside its technical specification limits (e.g. outside the process temperature range)
◇	**Maintenance required** Maintenance is required. The measured value is still valid.

The status signals are categorized in accordance with VDI/VDE 2650 and NAMUR Recommendation NE 107.

12.4.2 Calling up remedy information

Remedy information is provided for every diagnostic event to ensure that problems can be rectified quickly. These measures are displayed in red along with the diagnostic event and the related diagnostic information.

12.5 Diagnostic information in FieldCare or DeviceCare

12.5.1 Diagnostic options

Any faults detected by the measuring device are displayed on the home page of the operating tool once the connection has been established.

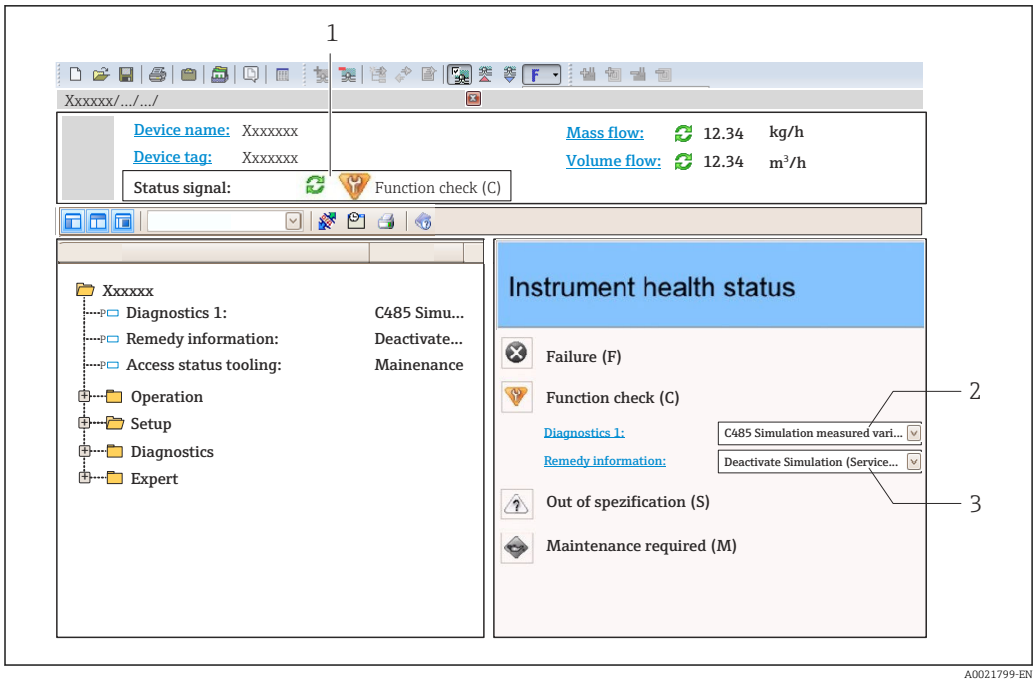

1 *Status area with status signal* → 📄 *186*
2 *Diagnostic information* → 📄 *187*
3 *Remedy information with Service ID*

In addition, diagnostic events which have occurred can be shown in the **Diagnostics** menu:
- Via parameter → 📄 205
- Via submenu → 📄 206

Diagnostic information

The fault can be identified using the diagnostic information. The short text helps you by providing information about the fault. In addition, the corresponding symbol for the diagnostic behavior is displayed in front of the diagnostic information on the local display.

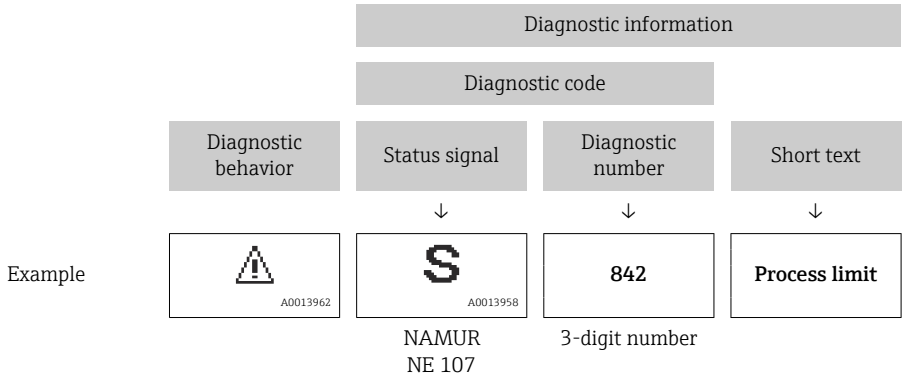

12.5.2 Calling up remedy information

Remedy information is provided for every diagnostic event to ensure that problems can be rectified quickly:
- On the home page
  Remedy information is displayed in a separate field below the diagnostics information.
- In the **Diagnostics** menu
  Remedy information can be called up in the working area of the user interface.

The user is in the **Diagnostics** menu.

1. Call up the desired parameter.
2. On the right in the working area, mouse over the parameter.
   ↳ A tool tip with remedy information for the diagnostic event appears.

12.6 Diagnostic information via communication interface

12.6.1 Reading out diagnostic information

The current diagnostic event and associated diagnostic information can be read out via the input assembly (fix assembly):

Bytes	0 1 2 3	4 5	6 7
Content	"Empty" or "Reserved"	"Empty" or "Padding bytes"	Diagnostic number of the diagnostic event that is displayed in the **Actual diagnostics** parameter , e.g. 242

For the content of bytes 8 to 16

12.7 Adapting the diagnostic information

12.7.1 Adapting the diagnostic behavior

Each item of diagnostic information is assigned a specific diagnostic behavior at the factory. The user can change this assignment for specific diagnostic information in the **Diagnostic behavior** submenu.

Expert → System → Diagnostic handling → Diagnostic behavior

You can assign the following options to the diagnostic number as the diagnostic behavior:

Options	Description
Alarm	The device stops measurement. The totalizers assume the defined alarm condition. A diagnostic message is generated. The background lighting changes to red.
Warning	The device continues to measure. The totalizers are not affected. A diagnostic message is generated.
Logbook entry only	The device continues to measure. The diagnostic message is displayed only in the **Event logbook** submenu (**Event list** submenu) and is not displayed in alternation with the operational display.
Off	The diagnostic event is ignored, and no diagnostic message is generated or entered.

12.8 Overview of diagnostic information

- The amount of diagnostic information and the number of measured variables affected increase if the measuring device has one or more application packages.
- All of the measured variables affected in the entire Promass instrument family are always listed under "Measured variables affected". The measured variables available for the device in question depend on the device version. When assigning the measured variables to the device functions, for example to the individual outputs, all of the measured variables available for the device version in question are available for selection.

In the case of some items of diagnostic information, the diagnostic behavior can be changed. Change the diagnostic information → 191

12.8.1 Diagnostic of sensor

Diagnostic information			Remedy instructions	Coding of diagnostic information (hex)
No.	Short text			
022	Temperature sensor defective		1. Check or replace sensor electronic module (ISEM) 2. If available: Check connection cable between sensor and transmitter 3. Replace sensor	▪ 0x10000BE ▪ 0x10000BF ▪ 0x10000D5 ▪ 0x10000D6
	Status signal	F		
	Diagnostic behavior	Alarm		

Diagnostic information			Remedy instructions	Coding of diagnostic information (hex)
No.	Short text			
046	Sensor limit exceeded		1. Inspect sensor 2. Check process condition	▪ 0x80000C8 ▪ 0x80000CA
	Status signal	S		
	Diagnostic behavior [from the factory] [1]	Alarm		

1) Diagnostic behavior can be changed.

Diagnostic information			Remedy instructions	Coding of diagnostic information (hex)
No.	Short text			
062	Sensor connection faulty		1. Check or replace sensor electronic module (ISEM) 2. If available: Check connection cable between sensor and transmitter 3. Replace sensor	▪ 0x10000DB ▪ 0x10000DC ▪ 0x1000113 ▪ 0x1000114
	Status signal	F		
	Diagnostic behavior	Alarm		

Diagnostic information			Remedy instructions	Coding of diagnostic information (hex)
No.	Short text			
063	Exciter current faulty		1. Check or replace sensor electronic module (ISEM) 2. If available: Check connection cable between sensor and transmitter 3. Replace sensor	0x80002B3
	Status signal	S		
	Diagnostic behavior	Alarm		

Diagnostic information			Remedy instructions	Coding of diagnostic information (hex)
No.	Short text			
082	Data storage		1. Check module connections 2. Contact service	0x10000E7
	Status signal	F		
	Diagnostic behavior	Alarm		

Diagnostic information			Remedy instructions	Coding of diagnostic information (hex)
No.	Short text			
083	Memory content		1. Restart device 2. Restore HistoROM S-DAT backup ('Device reset' parameter) 3. Replace HistoROM S-DAT	0x10000A0
	Status signal	F		
	Diagnostic behavior	Alarm		

Diagnostic information			Remedy instructions	Coding of diagnostic information (hex)
No.	Short text			
140	Sensor signal asymmetrical		1. Check or replace sensor electronic module (ISEM) 2. If available: Check connection cable between sensor and transmitter 3. Replace sensor	0x80000CC
	Status signal	S		
	Diagnostic behavior [from the factory] [1]	Alarm		

1) Diagnostic behavior can be changed.

Diagnostic information			Remedy instructions	Coding of diagnostic information (hex)
No.	Short text			
144	Measuring error too high		1. Check or change sensor 2. Check process conditions	0x10001C7
	Status signal	F		
	Diagnostic behavior [from the factory] [1]	Alarm		

1) Diagnostic behavior can be changed.

12.8.2 Diagnostic of electronic

Diagnostic information			Remedy instructions	Coding of diagnostic information (hex)
No.	Short text			
201	Device failure		1. Restart device 2. Contact service	0x100014B
	Status signal	F		
	Diagnostic behavior	Alarm		

Diagnostic information			Remedy instructions	Coding of diagnostic information (hex)
No.	Short text			
242	Software incompatible		1. Check software 2. Flash or change main electronics module	0x1000067
	Status signal	F		
	Diagnostic behavior	Alarm		

Diagnostic information			Remedy instructions	Coding of diagnostic information (hex)
No.	Short text			
252	Modules incompatible		1. Check electronic modules 2. Change electronic modules	0x100006B
	Status signal	F		
	Diagnostic behavior	Alarm		

Diagnostic information			Remedy instructions	Coding of diagnostic information (hex)
No.	Short text			
252	Modules incompatible		1. Check if correct electronic modul is plugged 2. Replace electronic module	0x10002C0
	Status signal	F		
	Diagnostic behavior	Alarm		

Diagnostic information			Remedy instructions	Coding of diagnostic information (hex)
No.	Short text			
262	Sensor electronic connection faulty		1. Check or replace connection cable between sensor electronic module (ISEM) and main electronics 2. Check or replace ISEM or main electronics	0x1000149
	Status signal	F		
	Diagnostic behavior	Alarm		

Diagnostic information			Remedy instructions	Coding of diagnostic information (hex)
No.	Short text			
270	Main electronic failure		Change main electronic module	▪ 0x1000078 ▪ 0x100007C ▪ 0x1000080 ▪ 0x100009F ▪ 0x10002D7
	Status signal	F		
	Diagnostic behavior	Alarm		

Diagnostic information			Remedy instructions	Coding of diagnostic information (hex)
No.	Short text			
271	Main electronic failure		1. Restart device 2. Change main electronic module	0x100007D
	Status signal	F		
	Diagnostic behavior	Alarm		

Diagnostic information			Remedy instructions	Coding of diagnostic information (hex)
No.	Short text			
272	Main electronic failure		1. Restart device 2. Contact service	0x1000079
	Status signal	F		
	Diagnostic behavior	Alarm		

Diagnostic information			Remedy instructions	Coding of diagnostic information (hex)
No.	Short text			
273	Main electronic failure		Change electronic	▪ 0x1000098 ▪ 0x10000E5
	Status signal	F		
	Diagnostic behavior	Alarm		

Diagnostic information			Remedy instructions	Coding of diagnostic information (hex)
No.	Short text			
275	I/O module 1 to n defective		Change I/O module	0x100007A
	Status signal	F		
	Diagnostic behavior	Alarm		

Diagnostic information			Remedy instructions	Coding of diagnostic information (hex)
No.	Short text			
276	I/O module 1 to n faulty		1. Restart device 2. Change I/O module	▪ 0x100007B ▪ 0x1000081
	Status signal	F		
	Diagnostic behavior	Alarm		

Diagnostic information			Remedy instructions	Coding of diagnostic information (hex)
No.	Short text			
283	Memory content		1. Reset device 2. Contact service	▪ 0x10000E1 ▪ 0x100016F
	Status signal	F		
	Diagnostic behavior	Alarm		

Diagnostic information			Remedy instructions	Coding of diagnostic information (hex)
No.	Short text			
302	Device verification active		Device verification active, please wait.	0x20001EE
	Status signal	C		
	Diagnostic behavior	Warning		

Diagnostic information			Remedy instructions	Coding of diagnostic information (hex)
No.	Short text			
311	Electronic failure		1. Do not reset device 2. Contact service	0x40000E2
	Status signal	M		
	Diagnostic behavior	Warning		

Diagnostic information			Remedy instructions	Coding of diagnostic information (hex)
No.	Short text			
332	Writing in HistoROM backup failed		Replace user interface board Ex d/XP: replace transmitter	0x10002C7
	Status signal	F		
	Diagnostic behavior	Alarm		

Diagnostic information			Remedy instructions	Coding of diagnostic information (hex)
No.	Short text			
361	I/O module 1 to n faulty		1. Restart device 2. Check electronic modules 3. Change I/O Modul or main electronics	0x1000095
	Status signal	F		
	Diagnostic behavior	Alarm		

Diagnostic information			Remedy instructions	Coding of diagnostic information (hex)
No.	Short text			
372	Sensor electronic (ISEM) faulty		1. Restart device 2. Check if failure recurs 3. Replace sensor electronic module (ISEM)	▪ 0x10000A1 ▪ 0x10000C7 ▪ 0x10000C9 ▪ 0x10000D4 ▪ 0x10000DA ▪ 0x1000120 ▪ 0x10002CB ▪ 0x10002CC ▪ 0x10002CD ▪ 0x10002CE ▪ 0x10002CF ▪ 0x10002D0
	Status signal	F		
	Diagnostic behavior	Alarm		

Diagnostic information			Remedy instructions	Coding of diagnostic information (hex)
No.	Short text			
373	Sensor electronic (ISEM) faulty		1. Transfer data or reset device 2. Contact service	0x10002D1
	Status signal	F		
	Diagnostic behavior	Alarm		

Diagnostic information			Remedy instructions	Coding of diagnostic information (hex)
No.	Short text			
374	Sensor electronic (ISEM) faulty		1. Restart device 2. Check if failure recurs 3. Replace sensor electronic module (ISEM)	0x80000CE
	Status signal	S		
	Diagnostic behavior [from the factory] [1)]	Warning		

1) Diagnostic behavior can be changed.

Diagnostic information			Remedy instructions	Coding of diagnostic information (hex)
No.	Short text			
375	I/O- 1 to n communication failed		1. Restart device 2. Check if failure recurs 3. Replace module rack inclusive electronic modules	0x1000107
	Status signal	F		
	Diagnostic behavior	Alarm		

Diagnostic information			Remedy instructions	Coding of diagnostic information (hex)
No.	Short text			
382	Data storage		1. Insert T-DAT 2. Replace T-DAT	0x100016D
	Status signal	F		
	Diagnostic behavior	Alarm		

Diagnostic information			Remedy instructions	Coding of diagnostic information (hex)
No.	Short text			
383	Memory content		1. Restart device 2. Delete T-DAT via 'Reset device' parameter 3. Replace T-DAT	0x100016E
	Status signal	F		
	Diagnostic behavior	Alarm		

Diagnostic information			Remedy instructions	Coding of diagnostic information (hex)
No.	Short text			
387	HistoROM backup failed		Contact service organization	0x1000288
	Status signal	F		
	Diagnostic behavior	Alarm		

12.8.3 Diagnostic of configuration

Diagnostic information			Remedy instructions	Coding of diagnostic information (hex)
No.	Short text			
303	I/O 1 to n configuration changed		1. Apply I/O module configuration (parameter 'Apply I/O configuration') 2. Afterwards reload device description and check wiring	0x400026C
	Status signal	M		
	Diagnostic behavior	Warning		

Diagnostic information			Remedy instructions	Coding of diagnostic information (hex)
No.	Short text			
330	Flash file invalid		1. Update firmware of device 2. Restart device	0x40002C9
	Status signal	M		
	Diagnostic behavior	Warning		

Diagnostic information			Remedy instructions	Coding of diagnostic information (hex)
No.	Short text			
331	Firmware update failed		1. Update firmware of device 2. Restart device	0x10002CA
	Status signal	F		
	Diagnostic behavior	Warning		

Diagnostic information			Remedy instructions	Coding of diagnostic information (hex)
No.	Short text			
410	Data transfer		1. Check connection 2. Retry data transfer	0x100008B
	Status signal	F		
	Diagnostic behavior	Alarm		

Diagnostic information			Remedy instructions	Coding of diagnostic information (hex)
No.	Short text			
412	Processing download		Download active, please wait	0x2000204
	Status signal	C		
	Diagnostic behavior	Warning		

Diagnostic information			Remedy instructions	Coding of diagnostic information (hex)
No.	Short text			
431	Trim 1 to n		Carry out trim	0x2000004
	Status signal	C		
	Diagnostic behavior	Warning		

Diagnostic information			Remedy instructions	Coding of diagnostic information (hex)
No.	Short text			
437	Configuration incompatible		1. Restart device 2. Contact service	0x1000060
	Status signal	F		
	Diagnostic behavior	Alarm		

Diagnostic information			Remedy instructions	Coding of diagnostic information (hex)
No.	Short text			
438	Dataset		1. Check data set file 2. Check device configuration 3. Up- and download new configuration	0x400006A
	Status signal	M		
	Diagnostic behavior	Warning		

Diagnostic information			Remedy instructions	Coding of diagnostic information (hex)
No.	Short text			
441	Current output 1 to n		1. Check process 2. Check current output settings	▪ 0x8000099 ▪ 0x80000B6
	Status signal	S		
	Diagnostic behavior	Warning		

Diagnostic information			Remedy instructions	Coding of diagnostic information (hex)
No.	Short text			
442	Frequency output 1 to n		1. Check process 2. Check frequency output settings	▪ 0x800008A ▪ 0x8000122
	Status signal	S		
	Diagnostic behavior	Warning		

Diagnostic information			Remedy instructions	Coding of diagnostic information (hex)
No.	Short text			
443	Pulse output 1 to n		1. Check process 2. Check pulse output settings	▪ 0x800008C ▪ 0x8000121
	Status signal	S		
	Diagnostic behavior	Warning		

Diagnostic information			Remedy instructions	Coding of diagnostic information (hex)
No.	Short text			
444	Current input 1 to n		1. Check process 2. Check current input settings	0x80001EB
	Status signal	S		
	Diagnostic behavior	Warning		

Diagnostic information			Remedy instructions	Coding of diagnostic information (hex)
No.	Short text			
453	Flow override		Deactivate flow override	0x2000094
	Status signal	C		
	Diagnostic behavior	Warning		

Diagnostic information			Remedy instructions	Coding of diagnostic information (hex)
No.	Short text			
484	Failure mode simulation		Deactivate simulation	0x2000090
	Status signal	C		
	Diagnostic behavior	Alarm		

Diagnostic information			Remedy instructions	Coding of diagnostic information (hex)
No.	Short text			
485	Measured variable simulation		Deactivate simulation	0x2000093
	Status signal	C		
	Diagnostic behavior	Warning		

Diagnostic information			Remedy instructions	Coding of diagnostic information (hex)
No.	Short text			
486	Current input 1 to n simulation		Deactivate simulation	0x20001EC
	Status signal	C		
	Diagnostic behavior	Warning		

Diagnostic information			Remedy instructions	Coding of diagnostic information (hex)
No.	Short text			
491	Current output 1 to n simulation		Deactivate simulation	0x200000E
	Status signal	C		
	Diagnostic behavior	Warning		

Diagnostic information			Remedy instructions	Coding of diagnostic information (hex)
No.	Short text			
492	Simulation frequency output 1 to n		Deactivate simulation frequency output	0x200008D
	Status signal	C		
	Diagnostic behavior	Warning		

Diagnostic information			Remedy instructions	Coding of diagnostic information (hex)
No.	Short text			
493	Simulation pulse output 1 to n		Deactivate simulation pulse output	0x200008E
	Status signal	C		
	Diagnostic behavior	Warning		

Diagnostic information			Remedy instructions	Coding of diagnostic information (hex)
No.	Short text			
494	Switch output simulation 1 to n		Deactivate simulation switch output	0x200008F
	Status signal	C		
	Diagnostic behavior	Warning		

Diagnostic information			Remedy instructions	Coding of diagnostic information (hex)
No.	Short text			
495	Diagnostic event simulation		Deactivate simulation	0x200015E
	Status signal	C		
	Diagnostic behavior	Warning		

Diagnostic information			Remedy instructions	Coding of diagnostic information (hex)
No.	Short text			
496	Status input simulation		Deactivate simulation status input	0x2000170
	Status signal	C		
	Diagnostic behavior	Warning		

Diagnostic information			Remedy instructions	Coding of diagnostic information (hex)
No.	Short text			
520	I/O 1 to n hardware configuration invalid		1. Check I/O hardware configuration 2. Replace wrong I/O module 3. Plug the module of double pulse output on correct slot	0x1000276
	Status signal	F		
	Diagnostic behavior	Alarm		

Diagnostic information			Remedy instructions	Coding of diagnostic information (hex)
No.	Short text			
528	Concentration settings faulty		1. Check concentration settings 2. Check input values e.g. pressure, temperature	0x8000387
	Status signal	S		
	Diagnostic behavior	Alarm		

Diagnostic information			Remedy instructions	Coding of diagnostic information (hex)
No.	Short text			
529	Concentration settings faulty		1. Check concentration settings 2. Check input values e.g. pressure, temperature	0x8000389
	Status signal	S		
	Diagnostic behavior	Warning		

Diagnostic information			Remedy instructions	Coding of diagnostic information (hex)
No.	Short text			
537	Configuration		1. Check IP addresses in network 2. Change IP address	0x100014A
	Status signal	F		
	Diagnostic behavior	Warning		

Diagnostic information			Remedy instructions	Coding of diagnostic information (hex)
No.	Short text			
594	Relay output simulation		Deactivate simulation switch output	0x20002BA
	Status signal	C		
	Diagnostic behavior	Warning		

12.8.4 Diagnostic of process

Diagnostic information			Remedy instructions	Coding of diagnostic information (hex)
No.	Short text			
803	Current loop		1. Check wiring 2. Change I/O module	0x10000AD
	Status signal	F		
	Diagnostic behavior	Alarm		

Diagnostic information			Remedy instructions	Coding of diagnostic information (hex)
No.	Short text			
830	Sensor temperature too high		Reduce ambient temp. around the sensor housing	0x80000C0
	Status signal	S		
	Diagnostic behavior [from the factory] [1]	Warning		

1) Diagnostic behavior can be changed.

Diagnostic information			Remedy instructions	Coding of diagnostic information (hex)
No.	Short text			
831	Sensor temperature too low		Increase ambient temp. around the sensor housing	0x80000C2
	Status signal	S		
	Diagnostic behavior [from the factory] [1]	Warning		

1) Diagnostic behavior can be changed.

Diagnostic information			Remedy instructions	Coding of diagnostic information (hex)
No.	Short text			
832	Electronic temperature too high		Reduce ambient temperature	▪ 0x80000C3 ▪ 0x80002D4
	Status signal	S		
	Diagnostic behavior [from the factory] [1]	Warning		

1) Diagnostic behavior can be changed.

Diagnostic information			Remedy instructions	Coding of diagnostic information (hex)
No.	Short text			
833	Electronic temperature too low		Increase ambient temperature	▪ 0x80000C1 ▪ 0x80002D3
	Status signal	S		
	Diagnostic behavior [from the factory] [1]	Warning		

1) Diagnostic behavior can be changed.

Diagnostic information			Remedy instructions	Coding of diagnostic information (hex)
No.	Short text			
834	Process temperature too high		Reduce process temperature	0x80000C5
	Status signal	S		
	Diagnostic behavior [from the factory] [1]	Warning		

1) Diagnostic behavior can be changed.

Diagnostic information			Remedy instructions	Coding of diagnostic information (hex)
No.	Short text			
835	Process temperature too low		Increase process temperature	0x80000C6
	Status signal	S		
	Diagnostic behavior [from the factory] [1]	Warning		

1) Diagnostic behavior can be changed.

Diagnostic information			Remedy instructions	Coding of diagnostic information (hex)
No.	Short text			
842	Process limit		Low flow cut off active! 1. Check low flow cut off configuration	0x8000091
	Status signal	S		
	Diagnostic behavior	Warning		

Diagnostic information			Remedy instructions	Coding of diagnostic information (hex)
No.	Short text			
862	Partly filled pipe		1. Check for gas in process 2. Adjust detection limits	0x8000092
	Status signal	S		
	Diagnostic behavior	Warning		

Diagnostic information			Remedy instructions	Coding of diagnostic information (hex)
No.	Short text			
882	Input signal		1. Check input configuration 2. Check external device or process conditions	▪ 0x1000031 ▪ 0x1000257
	Status signal	F		
	Diagnostic behavior	Alarm		

Diagnostic information			Remedy instructions	Coding of diagnostic information (hex)
No.	Short text			
910	Tubes not oscillating		1. Check electronic 2. Inspect sensor	0x1000050
	Status signal	F		
	Diagnostic behavior	Alarm		

Diagnostic information			Remedy instructions	Coding of diagnostic information (hex)
No.	Short text			
912	Medium inhomogeneous		1. Check process cond. 2. Increase system pressure	▪ 0x80000C4 ▪ 0x80000DF ▪ 0x8000115 ▪ 0x8000162
	Status signal	S		
	Diagnostic behavior [from the factory] [1)]	Warning		

1) Diagnostic behavior can be changed.

Diagnostic information			Remedy instructions	Coding of diagnostic information (hex)
No.	Short text			
913	Medium unsuitable		1. Check process conditions 2. Check electronic modules or sensor	0x80000CD
	Status signal	S		
	Diagnostic behavior [from the factory] [1)]	Alarm		

1) Diagnostic behavior can be changed.

Diagnostic information			Remedy instructions	Coding of diagnostic information (hex)
No.	Short text			
941	API temperature out of specification		1. Check process temperature with selected API commodity group 2. Check API related parameters	0x8000380
	Status signal	S		
	Diagnostic behavior	Alarm		

Diagnostic information			Remedy instructions	Coding of diagnostic information (hex)
No.	Short text			
942	API density out of specification		1. Check process density with selected API commodity group 2. Check API related parameters	0x800033B
	Status signal	S		
	Diagnostic behavior	Alarm		

Diagnostic information			Remedy instructions	Coding of diagnostic information (hex)
No.	Short text			
943	API pressure out of specification		1. Check process pressure with selected API commodity group 2. Check API related parameters	0x800037F
	Status signal	S		
	Diagnostic behavior	Alarm		

Diagnostic information			Remedy instructions	Coding of diagnostic information (hex)
No.	Short text			
944	Monitoring failed		Check process conditions for Heartbeat Monitoring	0x80001C6
	Status signal	S		
	Diagnostic behavior [from the factory] [1]	Warning		

1) Diagnostic behavior can be changed.

Diagnostic information			Remedy instructions	Coding of diagnostic information (hex)
No.	Short text			
948	Oscillation damping too high		Check process conditions	0x8000168
	Status signal	S		
	Diagnostic behavior	Warning		

12.9 Pending diagnostic events

The **Diagnostics** menu allows the user to view the current diagnostic event and the previous diagnostic event separately.

To call up the measures to rectify a diagnostic event:
- Via local display → 188
- Via Web browser → 189
- Via "FieldCare" operating tool → 190
- Via "DeviceCare" operating tool → 190

Other pending diagnostic events can be displayed in the **Diagnostic list** submenu → 206

Navigation
"Diagnostics" menu

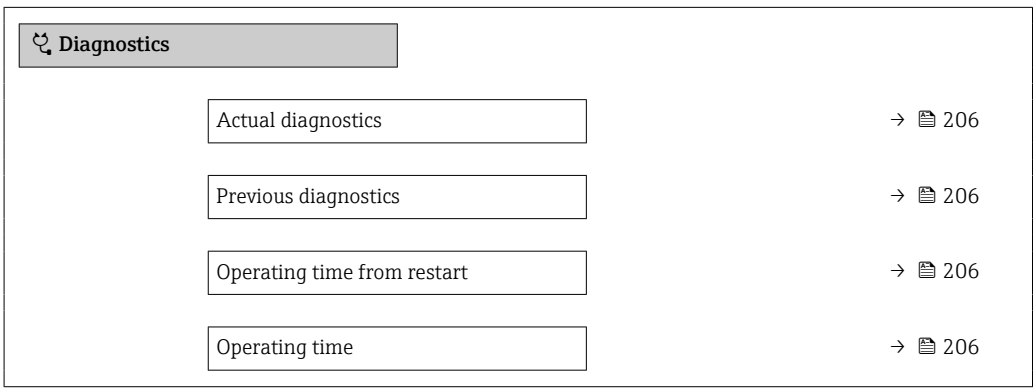

Parameter overview with brief description

Parameter	Prerequisite	Description	User interface
Actual diagnostics	A diagnostic event has occurred.	Shows the current occured diagnostic event along with its diagnostic information. If two or more messages occur simultaneously, the message with the highest priority is shown on the display.	Symbol for diagnostic behavior, diagnostic code and short message.
Previous diagnostics	Two diagnostic events have already occurred.	Shows the diagnostic event that occurred prior to the current diagnostic event along with its diagnostic information.	Symbol for diagnostic behavior, diagnostic code and short message.
Operating time from restart	–	Shows the time the device has been in operation since the last device restart.	Days (d), hours (h), minutes (m) and seconds (s)
Operating time	–	Indicates how long the device has been in operation.	Days (d), hours (h), minutes (m) and seconds (s)

12.10 Diagnostic list

Up to 5 currently pending diagnostic events can be displayed in the **Diagnostic list** submenu along with the associated diagnostic information. If more than 5 diagnostic events are pending, the events with the highest priority are shown on the display.

Navigation path
Diagnostics → Diagnostic list

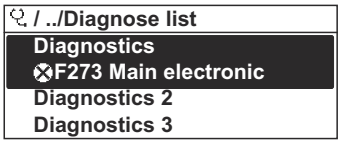

A0014006-EN

37 Taking the example of the local display

To call up the measures to rectify a diagnostic event:
- Via local display → 188
- Via Web browser → 189
- Via "FieldCare" operating tool → 190
- Via "DeviceCare" operating tool → 190

12.11 Event logbook

12.11.1 Reading out the event logbook

A chronological overview of the event messages that have occurred is provided in the **Events list** submenu.

Navigation path
Diagnostics menu → **Event logbook** submenu → Event list

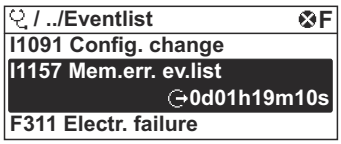

A0014008-EN

38 *Taking the example of the local display*

- A maximum of 20 event messages can be displayed in chronological order.
- If the **Extended HistoROM** application package (order option) is enabled in the device, the event list can contain up to 100 entries .

The event history includes entries for:
- Diagnostic events → 192
- Information events → 207

In addition to the operation time of its occurrence, each event is also assigned a symbol that indicates whether the event has occurred or is ended:
- Diagnostic event
  - : Occurrence of the event
  - : End of the event
- Information event
  : Occurrence of the event

To call up the measures to rectify a diagnostic event:
- Via local display → 188
- Via Web browser → 189
- Via "FieldCare" operating tool → 190
- Via "DeviceCare" operating tool → 190

For filtering the displayed event messages → 207

12.11.2 Filtering the event logbook

Using the **Filter options** parameter you can define which category of event message is displayed in the **Events list** submenu.

Navigation path
Diagnostics → Event logbook → Filter options

Filter categories
- All
- Failure (F)
- Function check (C)
- Out of specification (S)
- Maintenance required (M)
- Information (I)

12.11.3 Overview of information events

Unlike a diagnostic event, an information event is displayed in the event logbook only and not in the diagnostic list.

Info number	Info name
I1000	--------(Device ok)
I1079	Sensor changed
I1089	Power on
I1090	Configuration reset
I1091	Configuration changed

Info number	Info name
I1092	HistoROM backup deleted
I1111	Density adjust failure
I1137	Electronic changed
I1151	History reset
I1155	Reset electronic temperature
I1156	Memory error trend
I1157	Memory error event list
I1184	Display connected
I1209	Density adjustment ok
I1221	Zero point adjust failure
I1222	Zero point adjustment ok
I1256	Display: access status changed
I1278	I/O module reset detected
I1335	Firmware changed
I1361	Web server: login failed
I1397	Fieldbus: access status changed
I1398	CDI: access status changed
I1444	Device verification passed
I1445	Device verification failed
I1447	Record application reference data
I1448	Application reference data recorded
I1449	Recording application ref. data failed
I1450	Monitoring off
I1451	Monitoring on
I1457	Measured error verification failed
I1459	I/O module verification failed
I1460	HBSI verification failed
I1461	Sensor verification failed
I1462	Sensor electronic module verific. failed
I1512	Download started
I1513	Download finished
I1514	Upload started
I1515	Upload finished
I1618	I/O module 2 replaced
I1619	I/O module 3 replaced
I1621	I/O module 4 replaced
I1622	Calibration changed
I1624	Reset all totalizers
I1625	Write protection activated
I1626	Write protection deactivated
I1627	Web server: login successful
I1628	Display: login successful
I1629	CDI: login successful

Info number	Info name
I1631	Web server access changed
I1632	Display: login failed
I1633	CDI: login failed
I1634	Reset to factory settings
I1635	Reset to delivery settings
I1639	Max. switch cycles number reached
I1649	Hardware write protection activated
I1650	Hardware write protection deactivated
I1712	New flash file received
I1725	Sensor electronic module (ISEM) changed
I1726	Configuration backup failed

12.12 Resetting the measuring device

Using the**Device reset** parameter (→ 📄 161) it is possible to reset the entire device configuration or some of the configuration to a defined state.

12.12.1 Function scope of the "Device reset" parameter

Options	Description
Cancel	No action is executed and the user exits the parameter.
To delivery settings	Every parameter for which a customer-specific default setting was ordered is reset to this customer-specific value. All other parameters are reset to the factory setting.
Restart device	The restart resets every parameter whose data are in the volatile memory (RAM) to the factory setting (e.g. measured value data). The device configuration remains unchanged.
Restore S-DAT backup	Restore the data that are saved on the S-DAT. The data record is restored from the electronics memory to the S-DAT. ℹ This option is displayed only in an alarm condition.

12.13 Device information

The **Device information** submenu contains all parameters that display different information for device identification.

Navigation
"Diagnostics" menu → Device information

▶ Device information	
Device tag	→ 📄 210
Serial number	→ 📄 210
Firmware version	→ 📄 210

Device name	→ 210
Order code	→ 210
Extended order code 1	→ 210
Extended order code 2	→ 210
Extended order code 3	→ 210
ENP version	→ 210

Parameter overview with brief description

Parameter	Description	User interface	Factory setting
Device tag	Shows name of measuring point.	Max. 32 characters, such as letters, numbers or special characters (e.g. @, %, /).	–
Serial number	Shows the serial number of the measuring device.	Max. 11-digit character string comprising letters and numbers.	–
Firmware version	Shows the device firmware version installed.	Character string in the format xx.yy.zz	–
Device name	Shows the name of the transmitter. The name can be found on the nameplate of the transmitter.	Promass 300/500	–
Order code	Shows the device order code. The order code can be found on the nameplate of the sensor and transmitter in the "Order code" field.	Character string composed of letters, numbers and certain punctuation marks (e.g. /).	–
Extended order code 1	Shows the 1st part of the extended order code. The extended order code can also be found on the nameplate of the sensor and transmitter in the "Ext. ord. cd." field.	Character string	–
Extended order code 2	Shows the 2nd part of the extended order code. The extended order code can also be found on the nameplate of the sensor and transmitter in the "Ext. ord. cd." field.	Character string	–
Extended order code 3	Shows the 3rd part of the extended order code. The extended order code can also be found on the nameplate of the sensor and transmitter in the "Ext. ord. cd." field.	Character string	–
ENP version	Shows the version of the electronic nameplate (ENP).	Character string	–

12.14 Firmware history

Release date	Firmware version	Order code for "Firmware version"	Firmware changes	Documentation type	Documentation
10.2017	01.00.zz	Option **77**	Original firmware	Operating Instructions	BA01755D

It is possible to flash the firmware to the current version or the previous version using the service interface.

For the compatibility of the firmware version with the previous version, the installed device description files and operating tools, observe the information about the device in the "Manufacturer's information" document.

The manufacturer's information is available:
- In the Download Area of the Endress+Hauser web site: www.endress.com → Downloads
- Specify the following details:
  - Product root: e.g. 8Q5B
    The product root is the first part of the order code: see the nameplate on the device.
  - Text search: Manufacturer's information
  - Media type: Documentation – Technical Documentation

13 Maintenance

13.1 Maintenance tasks

No special maintenance work is required.

13.1.1 Exterior cleaning

When cleaning the exterior of measuring devices, always use cleaning agents that do not attack the surface of the housing or the seals.

13.2 Measuring and test equipment

Endress+Hauser offers a wide variety of measuring and test equipment, such as W@M or device tests.

Your Endress+Hauser Sales Center can provide detailed information on the services.

List of some of the measuring and testing equipment: → 215→ 217

13.3 Endress+Hauser services

Endress+Hauser offers a wide variety of services for maintenance such as recalibration, maintenance service or device tests.

Your Endress+Hauser Sales Center can provide detailed information on the services.

14 Repair

14.1 General notes

14.1.1 Repair and conversion concept

The Endress+Hauser repair and conversion concept provides for the following:
- The measuring devices have a modular design.
- Spare parts are grouped into logical kits with the associated Installation Instructions.
- Repairs are carried out by Endress+Hauser Service or by appropriately trained customers.
- Certified devices can only be converted to other certified devices by Endress+Hauser Service or at the factory.

14.1.2 Notes for repair and conversion

For repair and modification of a measuring device, observe the following notes:
- ▶ Use only original Endress+Hauser spare parts.
- ▶ Carry out the repair according to the Installation Instructions.
- ▶ Observe the applicable standards, federal/national regulations, Ex documentation (XA) and certificates.
- ▶ Document every repair and each conversion and enter them into the *W@M* life cycle management database.

14.2 Spare parts

W@M Device Viewer (www.endress.com/deviceviewer):
All the spare parts for the measuring device, along with the order code, are listed here and can be ordered. If available, users can also download the associated Installation Instructions.

Measuring device serial number:
- Is located on the nameplate of the device.
- Can be read out via the **Serial number** parameter (→ 210) in the **Device information** submenu.

14.3 Endress+Hauser services

Endress+Hauser offers a wide range of services.

Your Endress+Hauser Sales Center can provide detailed information on the services.

14.4 Return

The requirements for safe device return can vary depending on the device type and national legislation.

1. Refer to the website for more information:
   http://www.endress.com/support/return-material
2. Return the device if repairs or a factory calibration are required, or if the wrong device was ordered or delivered.

14.5 Disposal

If required by the Directive 2012/19/EU on waste electrical and electronic equipment (WEEE), the product is marked with the depicted symbol in order to minimize the disposal of WEEE as unsorted municipal waste. Do not dispose of products bearing this marking as unsorted municipal waste. Instead, return them to Endress+Hauser for disposal under the applicable conditions.

14.5.1 Removing the measuring device

1. Switch off the device.

WARNING

Danger to persons from process conditions.

- Beware of hazardous process conditions such as pressure in the measuring device, high temperatures or aggressive fluids.

2. Carry out the mounting and connection steps from the "Mounting the measuring device" and "Connecting the measuring device" sections in reverse order. Observe the safety instructions.

14.5.2 Disposing of the measuring device

WARNING

Danger to personnel and environment from fluids that are hazardous to health.

- Ensure that the measuring device and all cavities are free of fluid residues that are hazardous to health or the environment, e.g. substances that have permeated into crevices or diffused through plastic.

Observe the following notes during disposal:

- Observe valid federal/national regulations.
- Ensure proper separation and reuse of the device components.

15 Accessories

Various accessories, which can be ordered with the device or subsequently from Endress +Hauser, are available for the device. Detailed information on the order code in question is available from your local Endress+Hauser sales center or on the product page of the Endress+Hauser website: www.endress.com.

15.1 Device-specific accessories

15.1.1 For the transmitter

Accessories	Description
Transmitter ▪ Proline 500 – digital ▪ Proline 500	Transmitter for replacement or storage. Use the order code to define the following specifications: ▪ Approvals ▪ Output ▪ Input ▪ Display/operation ▪ Housing ▪ Software ▪ Proline 500 – digital transmitter: Order number: 8X5BXX-*********A ▪ Proline 500 transmitter: Order number: 8X5BXX-*********B Proline 500 transmitter for replacement: It is essential to specify the serial number of the current transmitter when ordering. Based on the serial number, the device-specific data (e.g., calibration factors) of the replacement device can be used for the new transmitter. ▪ Proline 500 – digital transmitter: Installation Instructions EA01151D ▪ Proline 500 transmitter: Installation Instructions EA01152D
External WLAN antenna	External WLAN antenna with 1.5 m (59.1 in) connecting cable and two angle brackets. Order code for "Accessory enclosed", option P8 "Wireless antenna wide area". ▪ The external WLAN antenna is not suitable for use in hygienic applications. ▪ Further information on the WLAN interface → 90. Order number: 71351317 Installation Instructions EA01238D
Pipe mounting set	Pipe mounting set for transmitter. Proline 500 – digital transmitter Order number: 71346427 Installation Instructions EA01195D Proline 500 transmitter Order number: 71346428
Protective cover Transmitter ▪ Proline 500 – digital ▪ Proline 500	Is used to protect the measuring device from the effects of the weather: e.g. rainwater, excess heating from direct sunlight. ▪ Proline 500 – digital transmitter Order number: 71343504 ▪ Proline 500 transmitter Order number: 71343505 Installation Instructions EA01191D

Display guard Proline 500 – digital	Is used to protect the display against impact or scoring from sand in desert areas. Order number: 71228792 Installation Instructions EA01093D
Connecting cable Proline 500 – digital Sensor – Transmitter	The connecting cable can be ordered directly with the measuring device (order code for "Cable, sensor connection) or as an accessory (order number DK8012). The following cable lengths are available: order code for "Cable, sensor connection" ▪ Option B: 20 m (65 ft) ▪ Option E: User configurable up to max. 50 m ▪ Option F: User configurable up to max. 165 ft Maximum possible cable length for a Proline 500 – digital connecting cable: 300 m (1 000 ft)
Connecting cable Proline 500 Sensor – Transmitter	The connecting cable can be ordered directly with the measuring device (order code for "Cable, sensor connection") or as an accessory (order number DK8012). The following cable lengths are available: order code for "Cable, sensor connection" ▪ Option 1: 5 m (16 ft) ▪ Option 2: 10 m (32 ft) ▪ Option 3: 20 m (65 ft) Possible cable length for a Proline 500 connecting cable: max. 20 m (65 ft)

15.1.2 For the sensor

Accessories	Description
Heating jacket	Is used to stabilize the temperature of the fluids in the sensor. Water, water vapor and other non-corrosive liquids are permitted for use as fluids. If using oil as a heating medium, please consult with Endress+Hauser. ▪ If ordered together with the measuring device: order code for "Enclosed accessories" ▪ Option RB "heating jacket, G 1/2" internal thread" ▪ Option RC "heating jacket, G 3/4" internal thread" ▪ Option RD "Heating jacket, NPT 1/2" internal thread" ▪ Option RE "Heating jacket, NPT 3/4" internal thread" ▪ If ordered subsequently: Use the order code with the product root DK8003. Special Documentation SD02161D

15.2 Communication-specific accessories

Accessories	Description
Fieldgate FXA42	Is used to transmit the measured values of connected 4 to 20 mA analog measuring devices, as well as digital measuring devices ▪ Technical Information TI01297S ▪ Operating Instructions BA01778S ▪ Product page: www.endress.com/fxa42

Field Xpert SMT70	The Field Xpert SMT70 tablet PC for device configuration enables mobile plant asset management in hazardous and non-hazardous areas. It is suitable for commissioning and maintenance staff to manage field instruments with a digital communication interface and to record progress. This tablet PC is designed as an all-in-one solution with a preinstalled driver library and is an easy-to-use, touch-sensitive tool which can be used to manage field instruments throughout their entire life cycle. ▪ Technical Information TI01342S ▪ Operating Instructions BA01709S ▪ Product page: www.endress.com/smt70
Field Xpert SMT77	The Field Xpert SMT77 tablet PC for device configuration enables mobile plant asset management in areas categorized as Ex Zone 1. ▪ Technical Information TI01418S ▪ Operating Instructions BA01923S ▪ Product page: www.endress.com/smt77

15.3 Service-specific accessories

Accessories	Description
Applicator	Software for selecting and sizing Endress+Hauser measuring devices: ▪ Choice of measuring devices for industrial requirements ▪ Calculation of all the necessary data for identifying the optimum flowmeter: e.g. nominal diameter, pressure loss, flow velocity and accuracy. ▪ Graphic illustration of the calculation results ▪ Determination of the partial order code, administration, documentation and access to all project-related data and parameters over the entire life cycle of a project. Applicator is available: ▪ Via the Internet: https://portal.endress.com/webapp/applicator ▪ As a downloadable DVD for local PC installation.
W@M	W@M Life Cycle Management Improved productivity with information at your fingertips. Data relevant to a plant and its components is generated from the first stages of planning and during the asset's complete life cycle. W@M Life Cycle Management is an open and flexible information platform with online and on-site tools. Instant access for your staff to current, in-depth data shortens your plant's engineering time, speeds up procurement processes and increases plant uptime. Combined with the right services, W@M Life Cycle Management boosts productivity in every phase. For more information, visit www.endress.com/lifecyclemanagement
FieldCare	FDT-based plant asset management tool from Endress+Hauser. It can configure all smart field units in your system and helps you manage them. By using the status information, it is also a simple but effective way of checking their status and condition. Operating Instructions BA00027S and BA00059S
DeviceCare	Tool to connect and configure Endress+Hauser field devices. Innovation brochure IN01047S

15.4 System components

Accessories	Description
Memograph M graphic data manager	The Memograph M graphic data manager provides information on all the relevant measured variables. Measured values are recorded correctly, limit values are monitored and measuring points analyzed. The data are stored in the 256 MB internal memory and also on a SD card or USB stick. ▪ Technical Information TI00133R ▪ Operating Instructions BA00247R
Cerabar M	The pressure transmitter for measuring the absolute and gauge pressure of gases, steam and liquids. It can be used to read in the operating pressure value. ▪ Technical Information TI00426P and TI00436P ▪ Operating Instructions BA00200P and BA00382P
Cerabar S	The pressure transmitter for measuring the absolute and gauge pressure of gases, steam and liquids. It can be used to read in the operating pressure value. ▪ Technical Information TI00383P ▪ Operating Instructions BA00271P
iTEMP	The temperature transmitters can be used in all applications and are suitable for the measurement of gases, steam and liquids. They can be used to read in the medium temperature. "Fields of Activity" document FA00006T

16 Technical data

16.1 Application

The measuring device is intended only for the flow measurement of liquids and gases.

Depending on the version ordered, the measuring device can also measure potentially explosive, flammable, poisonous and oxidizing media.

To ensure that the device remains in proper operating condition for its service life, use the measuring device only for media against which the process-wetted materials are sufficiently resistant.

16.2 Function and system design

Measuring principle	Mass flow measurement based on the Coriolis measuring principle
Measuring system	The measuring system consists of a transmitter and a sensor. The transmitter and sensor are mounted in physically separate locations. They are interconnected by connecting cables. For information on the structure of the device → 14

16.3 Input

Measured variable

Direct measured variables

- Mass flow
- Density
- Temperature

Calculated measured variables

- Volume flow
- Corrected volume flow
- Reference density

Measuring range

Measuring range for liquids

DN Measuring device		DN Compatible pipe diameter		Measuring range full scale values $\dot{m}_{min(F)}$ to $\dot{m}_{max(F)}$	
[mm]	[in]	[mm]	[in]	[kg/h]	[lb/min]
25	1	25/40	1/1½	0 to 20 000	0 to 735
50	2	50/80	2/3	0 to 80 000	0 to 2 940
80	3	80/100	3/4	0 to 200 000	0 to 7 350
100	4	100/150	4/6	0 to 550 000	0 to 20 210

Measuring range for gases

The full scale value depends on the density and the sound velocity of the gas used and can be calculated with the formula below:

$\dot{m}_{max(G)}$ = minimum ($\dot{m}_{max(F)} \cdot \rho_G : x$; $\rho_G \cdot c_G \cdot \pi/2 \cdot (d_i)^2 \cdot 3600$)

$\dot{m}_{max(G)}$	Maximum full scale value for gas [kg/h]
$\dot{m}_{max(F)}$	Maximum full scale value for liquid [kg/h]
$\dot{m}_{max(G)} < \dot{m}_{max(F)}$	$\dot{m}_{max(G)}$ can never be greater than $\dot{m}_{max(F)}$
ρ_G	Gas density in [kg/m³] at operating conditions
x	Constant dependent on nominal diameter
c_G	Sound velocity (gas) [m/s]
d_i	Measuring tube internal diameter [m]

DN		x
[mm]	[in]	[kg/m³]
25	1	100
50	2	100
80	3	120
100	4	200

Calculation example for gas

- Sensor: Promass Q, DN 50
- Gas: Air with a density of 60.3 kg/m³ (at 20 °C and 50 bar)
- Measuring range (liquid): 80 000 kg/h
- x = 100 kg/m³ (for Promass Q, DN 50)

Maximum possible full scale value:
$\dot{m}_{max(G)} = \dot{m}_{max(F)} \cdot \rho_G : x = 80\,000\ kg/h \cdot 60.3\ kg/m^3 : 100\ kg/m^3 = 48\,240\ kg/h$

Recommended measuring range

Flow limit → 236

Operable flow range

Over 1000 : 1.

Flow rates above the preset full scale value do not override the electronics unit, with the result that the totalizer values are registered correctly.

Input signal

External measured values

Various pressure and temperature measuring devices can be ordered from Endress +Hauser: see "Accessories" section → 218

It is recommended to read in external measured values to calculate the corrected volume flow.

Current input

The measured values are written from the automation system to the measuring device via the current input → 221.

Digital communication

The measured values are written from the automation system to the measuring device via EtherNet/IP.

Current input 0/4 to 20 mA

Current input	0/4 to 20 mA (active/passive)
Current span	▪ 4 to 20 mA (active) ▪ 0/4 to 20 mA (passive)
Resolution	1 µA
Voltage drop	Typically: 0.6 to 2 V for 3.6 to 22 mA (passive)
Maximum input voltage	≤ 30 V (passive)
Open-circuit voltage	≤ 28.8 V (active)
Possible input variables	▪ Pressure ▪ Temperature ▪ Density

Status input

Maximum input values	▪ DC −3 to 30 V ▪ If status input is active (ON): R_i >3 kΩ
Response time	Configurable: 5 to 200 ms
Input signal level	▪ Low signal: DC −3 to +5 V ▪ High signal: DC 12 to 30 V
Assignable functions	▪ Off ▪ Reset the individual totalizers separately ▪ Reset all totalizers ▪ Flow override

16.4 Output

Output signal

EtherNet/IP

Standards	In accordance with IEEE 802.3

Current output 4 to 20 mA

Signal mode	Can be set to: ▪ Active ▪ Passive
Current span	Can be set to: ▪ 4 to 20 mA NAMUR ▪ 4 to 20 mA US ▪ 4 to 20 mA ▪ 0 to 20 mA (only if the signal mode is active) ▪ Fixed current
Maximum output values	22.5 mA
Open-circuit voltage	DC 28.8 V (active)
Maximum input voltage	DC 30 V (passive)
Load	0 to 700 Ω
Resolution	0.38 µA
Damping	Configurable: 0 to 999.9 s
Assignable measured variables	▪ Mass flow ▪ Volume flow ▪ Corrected volume flow ▪ Density ▪ Reference density ▪ Temperature ▪ Electronics temperature ▪ Oscillation frequency 0 ▪ Oscillation damping 0 ▪ Signal asymmetry ▪ Exciter current 0 The range of options increases if the measuring device has one or more application packages.

Current output 4 to 20 mA Ex i passive

Order code	"Output; input 2" (21), "Output; input 3" (022): Option C: current output 4 to 20 mA Ex i passive
Signal mode	Passive
Current span	Can be set to: ▪ 4 to 20 mA NAMUR ▪ 4 to 20 mA US ▪ 4 to 20 mA ▪ Fixed current
Maximum output values	22.5 mA
Maximum input voltage	DC 30 V
Load	0 to 700 Ω
Resolution	0.38 µA

Damping	Configurable: 0 to 999 s
Assignable measured variables	▪ Mass flow ▪ Volume flow ▪ Corrected volume flow ▪ Density ▪ Reference density ▪ Temperature ▪ Electronics temperature ▪ Oscillation frequency 0 ▪ Oscillation damping 0 ▪ Signal asymmetry ▪ Exciter current 0 The range of options increases if the measuring device has one or more application packages.

Pulse/frequency/switch output

Function	Can be set to pulse, frequency or switch output
Version	Open collector Can be set to: ▪ Active ▪ Passive ▪ Passive NAMUR Ex-i, passive
Maximum input values	DC 30 V, 250 mA (passive)
Open-circuit voltage	DC 28.8 V (active)
Voltage drop	For 22.5 mA: ≤ DC 2 V
Pulse output	
Maximum input values	DC 30 V, 250 mA (passive)
Maximum output current	22.5 mA (active)
Open-circuit voltage	DC 28.8 V (active)
Pulse width	Configurable: 0.05 to 2 000 ms
Maximum pulse rate	10 000 Impulse/s
Pulse value	Adjustable
Assignable measured variables	▪ Mass flow ▪ Volume flow ▪ Corrected volume flow
Frequency output	
Maximum input values	DC 30 V, 250 mA (passive)
Maximum output current	22.5 mA (active)
Open-circuit voltage	DC 28.8 V (active)
Output frequency	Adjustable: end value frequency 2 to 10 000 Hz (f_{max} = 12 500 Hz)
Damping	Configurable: 0 to 999.9 s
Pulse/pause ratio	1:1

Assignable measured variables	▪ Mass flow ▪ Volume flow ▪ Corrected volume flow ▪ Density ▪ Reference density ▪ Temperature ▪ Electronics temperature ▪ Oscillation frequency 0 ▪ Oscillation damping 0 ▪ Signal asymmetry ▪ Exciter current 0 The range of options increases if the measuring device has one or more application packages.
Switch output	
Maximum input values	DC 30 V, 250 mA (passive)
Open-circuit voltage	DC 28.8 V (active)
Switching behavior	Binary, conductive or non-conductive
Switching delay	Configurable: 0 to 100 s
Number of switching cycles	Unlimited

Assignable functions	▪ Off
	▪ On
	▪ Diagnostic behavior
	▪ Limit value
	  ▪ Mass flow
	  ▪ Volume flow
	  ▪ Corrected volume flow
	  ▪ Density
	  ▪ Reference density
	  ▪ Temperature
	  ▪ Totalizer 1-3
	▪ Flow direction monitoring
	▪ Status
	  ▪ Partially filled pipe detection
	  ▪ Low flow cut off
	The range of options increases if the measuring device has one or more application packages.

Relay output

Function	Switch output
Version	Relay output, galvanically isolated
Switching behavior	Can be set to: ▪ NO (normally open), factory setting ▪ NC (normally closed)

Maximum switching capacity (passive)	▪ DC 30 V, 0.1 A ▪ AC 30 V, 0.5 A

Assignable functions	▪ Off
	▪ On
	▪ Diagnostic behavior
	▪ Limit value
	  ▪ Mass flow
	  ▪ Volume flow
	  ▪ Corrected volume flow
	  ▪ Density
	  ▪ Reference density
	  ▪ Temperature
	  ▪ Totalizer 1-3
	▪ Flow direction monitoring
	▪ Status
	  ▪ Partially filled pipe detection
	  ▪ Low flow cut off
	The range of options increases if the measuring device has one or more application packages.

User-configurable input/output

One specific input or output is assigned to a user-configurable input/output (configurable I/O) during device commissioning.

The following inputs and outputs are available for assignment:
- Choice of current output: 4 to 20 mA (active), 0/4 to 20 mA (passive)
- Pulse/frequency/switch output
- Choice of current input: 4 to 20 mA (active), 0/4 to 20 mA (passive)
- Status input

Signal on alarm

Depending on the interface, failure information is displayed as follows:

EtherNet/IP

Device diagnostics	Device condition can be read out in Input Assembly

Current output 0/4 to 20 mA

4 to 20 mA

Failure mode	Choose from: ▪ 4 to 20 mA in accordance with NAMUR recommendation NE 43 ▪ 4 to 20 mA in accordance with US ▪ Min. value: 3.59 mA ▪ Max. value: 22.5 mA ▪ Freely definable value between: 3.59 to 22.5 mA ▪ Actual value ▪ Last valid value

0 to 20 mA

Failure mode	Choose from: ▪ Maximum alarm: 22 mA ▪ Freely definable value between: 0 to 20.5 mA

Pulse/frequency/switch output

Pulse output	
Failure mode	Choose from: ▪ Actual value ▪ No pulses
Frequency output	
Failure mode	Choose from: ▪ Actual value ▪ 0 Hz ▪ Defined value (f_{max} 2 to 12 500 Hz)
Switch output	
Failure mode	Choose from: ▪ Current status ▪ Open ▪ Closed

Relay output

Failure mode	Choose from: ▪ Current status ▪ Open ▪ Closed

Local display

Plain text display	With information on cause and remedial measures
Backlight	Red backlighting indicates a device error.

Status signal as per NAMUR recommendation NE 107

Interface/protocol

- Via digital communication:
  EtherNet/IP
- Via service interface
  - CDI-RJ45 service interface
  - WLAN interface

Plain text display	With information on cause and remedial measures

Web browser

Plain text display	With information on cause and remedial measures

Light emitting diodes (LED)

Status information	Status indicated by various light emitting diodes The following information is displayed depending on the device version: ▪ Supply voltage active ▪ Data transmission active ▪ Device alarm/error has occurred ▪ EtherNet/IP network available ▪ EtherNet/IP connection established Diagnostic information via light emitting diodes → 📄 183

Low flow cut off

The switch points for low flow cut off are user-selectable.

Galvanic isolation

The outputs are galvanically isolated from one another and from earth (PE).

Protocol-specific data

Protocol	▪ The CIP Networks Library Volume 1: Common Industrial Protocol ▪ The CIP Networks Library Volume 2: EtherNet/IP Adaptation of CIP
Communication type	▪ 10Base-T ▪ 100Base-TX
Device profile	Generic device (product type: 0x2B)
Manufacturer ID	0x11
Device type ID	0x103B
Baud rates	Automatic $^{10}/_{100}$ Mbit with half-duplex and full-duplex detection
Polarity	Auto-polarity for automatic correction of crossed TxD and RxD pairs
Supported CIP connections	Max. 3 connections
Explicit connections	Max. 6 connections
I/O connections	Max. 6 connections (scanner)
Configuration options for measuring device	▪ DIP switches on the electronics module for IP addressing ▪ Manufacturer-specific software (FieldCare) ▪ Add-on Profile Level 3 for Rockwell Automation control systems ▪ Web browser ▪ Electronic Data Sheet (EDS) integrated in the measuring device
Configuration of the EtherNet interface	▪ Speed: 10 MBit, 100 MBit, auto (factory setting) ▪ Duplex: half-duplex, full-duplex, auto (factory setting)
Configuration of the device address	▪ DIP switches on the electronics module for IP addressing (last octet) ▪ DHCP ▪ Manufacturer-specific software (FieldCare) ▪ Add-on Profile Level 3 for Rockwell Automation control systems ▪ Web browser ▪ EtherNet/IP tools, e.g. RSLinx (Rockwell Automation)
Device Level Ring (DLR)	Yes
System integration	Information regarding system integration → 📄 95. ▪ Cyclic data transmission ▪ Block model ▪ Input and output groups

16.5 Power supply

Terminal assignment

→ 📄 38

Device plugs available

→ 📖 39

Supply voltage

Order code for "Power supply"	Terminal voltage		Frequency range
Option **D**	DC 24 V	±20%	–
Option **E**	AC 100 to 240 V	−15 to +10%	50/60 Hz
Option **I**	DC 24 V	±20%	–
	AC 100 to 240 V	−15 to +10%	50/60 Hz

Power consumption

Transmitter

Max. 10 W (active power)

switch-on current	Max. 36 A (<5 ms) as per NAMUR Recommendation NE 21

Current consumption

Transmitter

- Max. 400 mA (24 V)
- Max. 200 mA (110 V, 50/60 Hz; 230 V, 50/60 Hz)

Power supply failure

- Totalizers stop at the last value measured.
- Depending on the device version, the configuration is retained in the device memoryor in the pluggable data memory (HistoROM DAT).
- Error messages (incl. total operated hours) are stored.

Electrical connection

→ 📖 50

Potential equalization

→ 📖 58

Terminals

Spring-loaded terminals: Suitable for strands and strands with ferrules.
Conductor cross-section 0.2 to 2.5 mm^2 (24 to 12 AWG).

Cable entries

- Cable gland: M20 × 1.5 with cable ⌀ 6 to 12 mm (0.24 to 0.47 in)
- Thread for cable entry:
  - NPT ½"
  - G ½"
  - M20
- Device plug for digital communication: M12
- Device plug for connecting cable: M12
  A device plug is always used for the device version with the order code for "Sensor connection housing", option **C** "Ultra-compact, hygienic, stainless".

Cable specification

→ 📖 34

16.6 Performance characteristics

Reference operating conditions

- Error limits based on ISO 11631
- Water with +15 to +45 °C (+59 to +113 °F) at2 to 6 bar (29 to 87 psi)
- Specifications as per calibration protocol
- Accuracy based on accredited calibration rigs that are traced to ISO 17025.

To obtain measured errors, use the *Applicator* sizing tool → 217

Maximum measured error

o.r. = of reading; 1 g/cm³ = 1 kg/l; T = medium temperature

Base accuracy

Design fundamentals → 232

Mass flow and volume flow (liquids)

±0.05 % o.r. (PremiumCal; order code for "Calibration flow", option D, for mass flow)
±0.10 % o.r.

Mass flow (gases)

±0.35 % o.r.

Density

±0.2 kg/m³ / ±0.0002 g/cm³

Valid between 20 °C and 60 °C. The measured error increases by 0.015 kg/(m³·°C) outside the temperature range

Valid range for density calibration: 0 to 2 000 kg/m³, +20 to +60 °C (+68 to +140 °F)

For highly accurate density measurement, avoid significant tensile stresses due to the installation and ensure the flow velocity in the nominal diameter is > 0.1 m/s.

Temperature

±0.1 °C ± 0.003 · T °C (±0.18 °F ± 0.003 · (T − 32) °F)

Zero point stability

DN		Zero point stability	
[mm]	[in]	[kg/h]	[lb/min]
25	1	0.36	0.013
50	2	1.8	0.066
80	3	5.4	0.20
100	4	11.5	0.42

Flow values

Flow values as turndown parameter depending on nominal diameter.

SI units

DN	1:1	1:10	1:20	1:50	1:100	1:500
[mm]	[kg/h]	[kg/h]	[kg/h]	[kg/h]	[kg/h]	[kg/h]
25	20000	2000	1000	400	200	40
50	80000	8000	4000	1600	800	160
80	200000	20000	10000	4000	2000	400
100	550000	55000	27500	11000	5500	1100

US units

DN	1:1	1:10	1:20	1:50	1:100	1:500
[inch]	[lb/min]	[lb/min]	[lb/min]	[lb/min]	[lb/min]	[lb/min]
1	736	73.6	36.8	14.7	7.4	1.5
2	2944	294.4	147.2	58.9	29.5	5.9
3	7360	736	368	147.2	73.6	14.7
4	20240	2024	1012	404.8	202.4	40.5

Accuracy of outputs

The outputs have the following base accuracy specifications.

Current output

Accuracy	±5 µA

Pulse/frequency output

o.r. = of reading

Accuracy	Max. ±50 ppm o.r. (over the entire ambient temperature range)

Repeatability

o.r. = of reading; 1 g/cm^3 = 1 kg/l; T = medium temperature

Base repeatability

Design fundamentals → 232

Mass flow and volume flow (liquids)

±0.025 % o.r.

Mass flow (gases)

±0.25 % o.r.

Density (liquids)

±0.1 kg/m^3 / ±0.0001 g/cm^3

Temperature

±0.05 °C ± 0.0025 · T °C (±0.09 °F ± 0.0015 · (T−32) °F)

Response time

The response time depends on the configuration (damping).

Influence of ambient temperature

Current output

Temperature coefficient	Max. 1 µA/°C

Pulse/frequency output

Temperature coefficient	No additional effect. Included in accuracy.

Influence of medium temperature

Mass flow and volume flow

o.f.s. = of full scale value

When there is a difference between the temperature for zero point adjustment and the process temperature, the additional measured error of the sensor is typically
DN 25 (1"): ±0.0001 % o.f.s./°C (±0.00005 % o.f.s./°F)
DN 50, 80, 100 (2", 3", 4"): ±0.00015 % o.f.s./°C (±0.000075 % o.f.s./°F)

The effect is reduced if zero point adjustment is performed at process temperature.

Density
When there is a difference between the density calibration temperature and the process temperature, the typical measured error of the sensor is
±0.015 kg/m³ /°C (±0.0075 kg/m³ /°F)

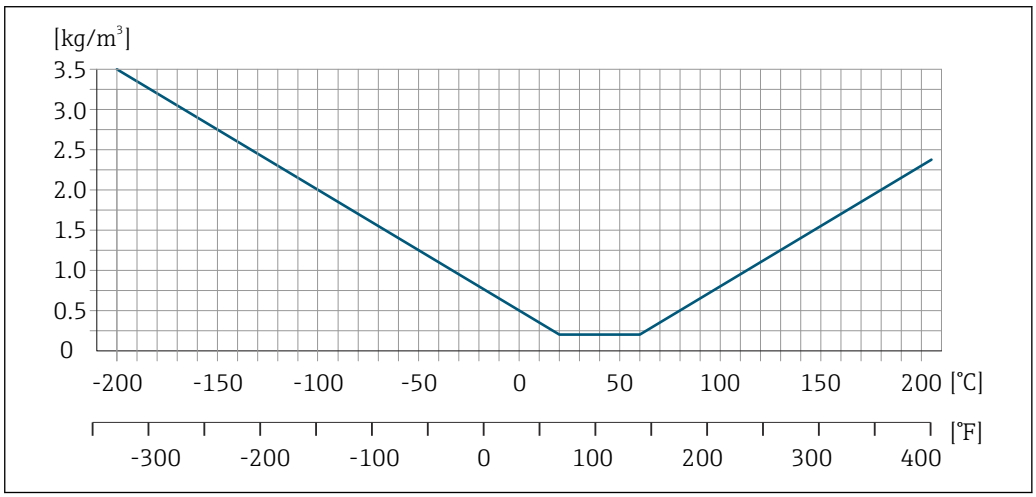

A0028731

Temperature
±0.005 · T °C (± 0.005 · (T − 32) °F)

Influence of medium pressure

Mass flow

DN		[% o.r./bar] ±0.0005	[% o.r./psi] ±0.00003
[mm]	[in]		
25	1	−0.0040	−0.00027
50	2	−0.0025	−0.00017
80	3	−0.0085	−0.00057
100	4	−0.0040	−0.00027

Volume flow

DN		[% o.r./bar] ±0.0008	[% o.r./psi] ±0.00005
[mm]	[in]		
25	1	−0.0011	−0.000073
50	2	+0.0009	+0.000060
80	3	−0.0061	−0.004070
100	4	−0.0034	−0.000227

Density

DN		[% o.r./bar] ±0.0006	[% o.r./psi] ±0.00004
[mm]	[in]		
25	1	−0.0029	−0.000193
50	2	−0.0034	−0.000227
80	3	−0.0024	−0.000160
100	4	−0.0006	−0.000040

Design fundamentals

o.r. = of reading, o.f.s. = of full scale value

BaseAccu = base accuracy in % o.r., BaseRepeat = base repeatability in % o.r.

MeasValue = measured value; ZeroPoint = zero point stability

Calculation of the maximum measured error as a function of the flow rate

Flow rate	Maximum measured error in % o.r.
$\geq \frac{\text{ZeroPoint}}{\text{BaseAccu}} \cdot 100$ A0021332	$\pm$ BaseAccu A0021339
$< \frac{\text{ZeroPoint}}{\text{BaseAccu}} \cdot 100$ A0021333	$\pm \frac{\text{ZeroPoint}}{\text{MeasValue}} \cdot 100$ A0021334

Calculation of the maximum repeatability as a function of the flow rate

Flow rate	Maximum repeatability in % o.r.
$\geq \frac{½ \cdot \text{ZeroPoint}}{\text{BaseRepeat}} \cdot 100$ A0021335	$\pm$ BaseRepeat A0021340
$< \frac{½ \cdot \text{ZeroPoint}}{\text{BaseRepeat}} \cdot 100$ A0021336	$\pm ½ \cdot \frac{\text{ZeroPoint}}{\text{MeasValue}} \cdot 100$ A0021337

Example for maximum measured error

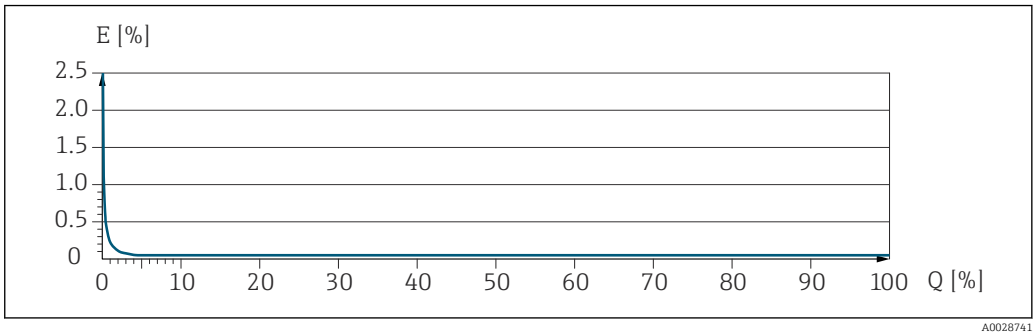

E Maximum measured error in % o.r. (example with PremiumCal)
Q Flow rate in % of maximum full scale value

16.7 Installation

Installation conditions	→ 📄 22

16.8 Environment

Ambient temperature range	→ 📄 25→ 📄 25 **Temperature tables** Observe the interdependencies between the permitted ambient and fluid temperatures when operating the device in hazardous areas. For detailed information on the temperature tables, see the separate document entitled "Safety Instructions" (XA) for the device.
Storage temperature	−50 to +80 °C (−58 to +176 °F)
Climate class	DIN EN 60068-2-38 (test Z/AD)
Degree of protection	**Transmitter** ▪ As standard: IP66/67, type 4X enclosure ▪ When housing is open: IP20, type 1 enclosure ▪ Display module: IP20, type 1 enclosure **Sensor** As standard: IP66/67, type 4X enclosure **External WLAN antenna** IP67
Vibration- and shock-resistance	**Vibration sinusoidal, in accordance with IEC 60068-2-6** Sensor: order code for "Meas. tube mat., wetted parts surface", option LA, SD, SE, SF, TH, TT, TU ▪ 2 to 8.4 Hz, 3.5 mm peak ▪ 8.4 to 2 000 Hz, 1 g peak

Sensor: order code for "Meas. tube mat., wetted parts surface", option HA, SA, SB, SC
- 2 to 8.4 Hz, 7.5 mm peak
- 8.4 to 2 000 Hz, 2 g peak

Transmitter
- 2 to 8.4 Hz, 7.5 mm peak
- 8.4 to 2 000 Hz, 2 g peak

Vibration broad-band random, according to IEC 60068-2-64

Sensor: order code for "Meas. tube mat., wetted parts surface", option LA, SD, SE, SF, TH, TT, TU
- 10 to 200 Hz, 0.003 g^2/Hz
- 200 to 2 000 Hz, 0.001 g^2/Hz
- Total: 1.54 g rms

Sensor: order code for "Meas. tube mat., wetted parts surface", option HA, SA, SB, SC
- 10 to 200 Hz, 0.01 g^2/Hz
- 200 to 2 000 Hz, 0.003 g^2/Hz
- Total: 2.70 g rms

Transmitter
- 10 to 200 Hz, 0.01 g^2/Hz
- 200 to 2 000 Hz, 0.003 g^2/Hz
- Total: 2.70 g rms

Shock half-sine, according to IEC 60068-2-27

- Sensor: order code for "Meas. tube mat., wetted parts surface", option LA, SD, SE, SF, TH, TT, TU
  6 ms 30 g
- Sensor: order code for "Meas. tube mat., wetted parts surface", option HA, SA, SB, SC
  6 ms 50 g
- Transmitter
  6 ms 50 g

Rough handling shocks, according to IEC 60068-2-31

Mechanical load

Never use the transmitter housing as a ladder or climbing aid.

Electromagnetic compatibility (EMC)

As per IEC/EN 61326 and NAMUR Recommendation 21 (NE 21)

Details are provided in the Declaration of Conformity.

16.9 Process

Medium temperature range

Standard version	−50 to +205 °C (−58 to +401 °F)	Order code for "Measuring tube mat., wetted surface", option SA, SB
Low-temperature version	−196 to +150 °C (−320 to +302 °F) NOTICE **Material fatigue due to excessive temperature difference!** ▶ Maximum temperature difference of media used: 300 K	Order code for "Measuring tube mat., wetted surface", option LA

Dependency of ambient temperature on medium temperature

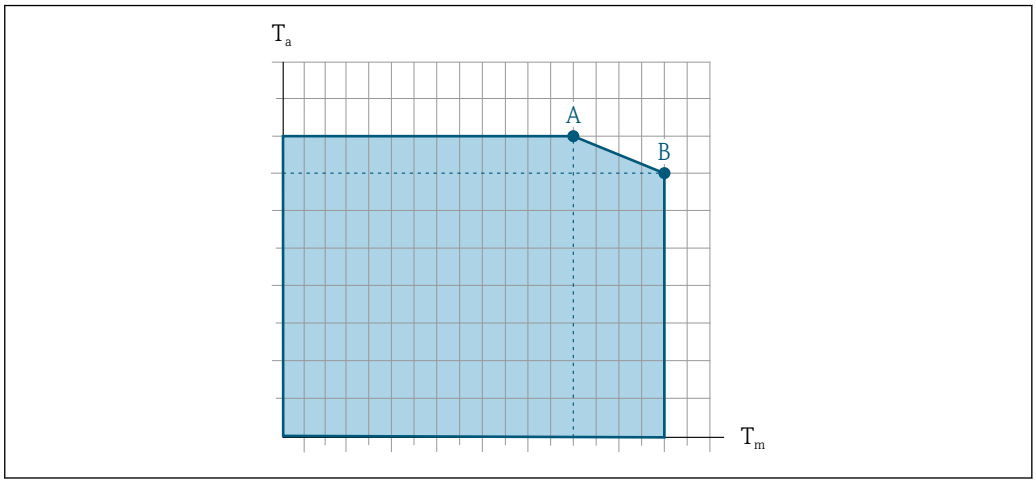

39 Exemplary representation, values in the table below.

T_a Ambient temperature range
T_m Medium temperature
A Maximum permitted medium temperature T_m at $T_{a\,max}$ = 60 °C (140 °F); higher medium temperatures T_m require a reduced ambient temperature T_a
B Maximum permitted ambient temperature T_a for the maximum specified medium temperature T_m of the sensor

Values for devices used in the hazardous area:
Separate Ex documentation (XA) for the device → 248.

	Not insulated				Insulated			
	A		B		A		B	
Version [1]	T_a	T_m	T_a	T_m	T_a	T_m	T_a	T_m
Standard version	60 °C (140 °F)	205 °C (401 °F)	–	–	60 °C (140 °F)	150 °C (302 °F)	50 °C (122 °F)	205 °C (401 °F)

1) The values apply for Promass Q 500 - digital and Promass Q 500.

Density

0 to 5 000 kg/m³ (0 to 312 lb/cf)

Pressure-temperature ratings

An overview of the pressure-temperature ratings for the process connections is provided in the "Technical Information" document

Sensor housing

The sensor housing is filled with helium and protects the electronics and mechanics inside.

If a measuring tube fails (e.g. due to process characteristics like corrosive or abrasive fluids), the fluid will initially be contained by the sensor housing.

In the event of a tube failure, the pressure level inside the sensor housing will rise according to the operating process pressure. If the user judges that the sensor housing burst pressure does not provide an adequate safety margin, the device can be fitted with a rupture disk. This prevents excessively high pressure from forming inside the sensor housing. Therefore, the use of a rupture disk is strongly recommended in applications involving high gas pressures, and particularly in applications in which the process pressure is greater than 2/3 of the sensor housing burst pressure.

If there is a need to drain the leaking medium into a discharge device, the sensor should be fitted with a rupture disk. Connect the discharge to the additional threaded connection .

If the sensor is to be purged with gas (gas detection), it should be equipped with purge connections.

Do not open the purge connections unless the containment can be filled immediately with a dry, inert gas. The use of helium at low pressure is recommended for purging.

Maximum pressure: 0.5 bar (7.3 psi)

Burst pressure of the sensor housing

The following sensor housing burst pressures are only valid for standard devices and/or devices equipped with closed purge connections (not opened/as delivered).

If a device fitted with purge connections (order code for "Sensor option", option CH "Purge connection") is connected to the purge system, the maximum pressure is determined by the purge system itself or by the device, depending on which component has the lower pressure classification.

If the device is fitted with a rupture disk (order code for "Sensor option", option CA "Rupture disk"), the rupture disk trigger pressure is decisive .

The sensor housing burst pressure refers to a typical internal pressure which is reached prior to mechanical failure of the sensor housing and which was determined during type testing. The corresponding type test declaration can be ordered with the device (order code for "Additional approval", option LN "Sensor housing burst pressure, type test").

DN		Sensor housing burst pressure	
[mm]	[in]	[bar]	[psi]
25	1	220	3 191
50	2	160	2 320
80	3	150	2 175
100	4	120	1 740

For information on the dimensions: see the "Mechanical construction" section of the "Technical Information" document

Rupture disk

To increase the level of safety, a device version with a rupture disk with a trigger pressure of 10 to 15 bar (145 to 217.5 psi)can be used (order code for "Sensor option", option "rupture disk").

For information on the dimensions of the rupture disk: see the "Mechanical construction" section of the "Technical Information" document

Flow limit

Select the nominal diameter by optimizing between the required flow range and permissible pressure loss.

For an overview of the full scale values for the measuring range, see the "Measuring range" section → 220

- The minimum recommended full scale value is approx. 1/20 of the maximum full scale value
- In most applications, 20 to 50 % of the maximum full scale value can be considered ideal
- A low full scale value must be selected for abrasive media (such as liquids with entrained solids): flow velocity < 1 m/s (< 3 ft/s).

To calculate the flow limit, use the *Applicator* sizing tool → 217

Pressure loss

To calculate the pressure loss, use the *Applicator* sizing tool → 217

System pressure

16.10 Mechanical construction

Design, dimensions

For the dimensions and installation lengths of the device, see the "Technical Information" document, "Mechanical construction" section.

Weight

All values (weight exclusive of packaging material) refer to devices with EN/DIN PN 40 flanges.

Transmitter
- Proline 500 – digital polycarbonate: 1.4 kg (3.1 lbs)
- Proline 500 – digital aluminum: 2.4 kg (5.3 lbs)
- Proline 500 aluminum: 6.5 kg (14.3 lbs)
- Proline 500 cast, stainless: 15.6 kg (34.4 lbs)

Sensor
- Sensor with aluminum connection housing version: see the information in the following table
- Sensor with cast connection housing version, stainless: +3.7 kg (+8.2 lbs)

Weight in SI units

DN [mm]	Weight [kg]
25	11
50	33
80	60
100	149

Weight in US units

DN [in]	Weight [lbs]
1	24
2	73
3	132
4	329

Materials

Transmitter housing

Housing of Proline 500 – digital transmitter

Order code for "Transmitter housing":
- Option **A** "Aluminum coated": aluminum, AlSi10Mg, coated
- Option **D** "Polycarbonate": polycarbonate

Housing of Proline 500 transmitter

Order code for "Transmitter housing":
- Option **A** "Aluminum coated": aluminum, AlSi10Mg, coated
- Option **L** "Cast, stainless": cast, stainless steel, 1.4409 (CF3M) similar to 316L

Window material

Order code for "Transmitter housing":
- Option **A** "Aluminum, coated": glass
- Option **D** "Polycarbonate": plastic
- Option **L** "Cast, stainless": glass

Fastening components for mounting on a post

- Screws, threaded bolts, washers, nuts: stainless A2 (chrome-nickel steel)
- Metal plates: stainless steel, 1.4301 (304)

Sensor connection housing

Order code for "Sensor connection housing":
- Option **A** "Aluminum coated": aluminum, AlSi10Mg, coated
- Option **B** "Stainless":
  - Stainless steel 1.4301 (304)
  - Optional: Order code for "Sensor feature", option **CC** "Hygienic version, for maximum corrosion resistance": stainless steel, 1.4404 (316L)
- Option **C** "Ultra-compact, stainless":
  - Stainless steel 1.4301 (304)
  - Optional: Order code for "Sensor feature", option **CC** "Hygienic version, for maximum corrosion resistance": stainless steel, 1.4404 (316L)
- Option **L** "Cast, stainless": 1.4409 (CF3M) similar to 316L

Cable entries/cable glands

Cable entries and adapters	Material
Cable gland M20 × 1.5	Plastic
▪ Adapter for cable entry with female thread G ½" ▪ Adapter for cable entry with female thread NPT ½" Only available for certain device versions: ▪ Order code for "Transmitter housing": ▪ Option A "Aluminum, coated" ▪ Option D "Polycarbonate" ▪ Order code for "Sensor connection housing": ▪ Proline 500 – digital: Option A "Aluminum coated" Option B "Stainless" Option L "Cast, stainless" ▪ Proline 500: Option B "Stainless" Option L "Cast, stainless"	Nickel-plated brass
▪ Adapter for cable entry with female thread G ½" ▪ Adapter for cable entry with female thread NPT ½" Only available for certain device versions: ▪ Order code for "Transmitter housing": Option L "Cast, stainless" ▪ Order code for "Sensor connection housing": Option L "Cast, stainless"	Stainless steel, 1.4404 (316L)

Connecting cable

UV rays can impair the cable outer sheath. Protect the cable from exposure to sun as much as possible.

Connecting cable for sensor - Proline 500 – digital transmitter

PVC cable with copper shield

Connecting cable for sensor - Proline 500 transmitter

- Standard cable: PVC cable with copper shield
- Armored cable: PVC cable with copper shield and additional steel wire braided jacket

Measuring tubes

Stainless steel, 1.4404 (316/316L); manifold: stainless steel, 1.4404 (316/316L)

Process connections

Flanges according to EN 1092-1 (DIN 2501) / according to ASME B16.5 / as per JIS B2220:
Stainless steel, 1.4404 (F316/F316L)

Available process connections→ 239

Seals

Welded process connections without internal seals

Accessories

Protective cover

Stainless steel, 1.4404 (316L)

External WLAN antenna

- Antenna: ASA plastic (acrylic ester-styrene-acrylonitrile) and nickel-plated brass
- Adapter: Stainless steel and nickel-plated brass
- Cable: Polyethylene
- Plug: Nickel-plated brass
- Angle bracket: Stainless steel

Process connections	Fixed flange connections: ▪ EN 1092-1 (DIN 2501) flange ▪ EN 1092-1 (DIN 2512N) flange ▪ ASME B16.5 flange ▪ JIS B2220 flange Process connection materials → 239
Surface roughness	All data relate to parts in contact with fluid. The following surface roughness quality can be ordered. ▪ Not polished ▪ Ra_{max} = 0.76 µm (30 µin) ▪ Ra_{max} = 0.38 µm (15 µin)

16.11 Human interface

Languages

Can be operated in the following languages:
- Via local operation
  English, German, French, Spanish, Italian, Dutch, Portuguese, Polish, Russian, Turkish, Chinese, Japanese, Korean, Bahasa (Indonesian), Vietnamese, Czech, Swedish
- Via Web browser
  English, German, French, Spanish, Italian, Dutch, Portuguese, Polish, Russian, Turkish, Chinese, Japanese, Korean, Bahasa (Indonesian), Vietnamese, Czech, Swedish
- Via "FieldCare", "DeviceCare" operating tool: English, German, French, Spanish, Italian, Chinese, Japanese

Local operation

Via display module

Equipment:
- Order code for "Display; operation", option F "4-line, illuminated, graphic display; touch control"
- Order code for "Display; operation", option G "4-line, illuminated, graphic display; touch control + WLAN"

Information about WLAN interface → 90

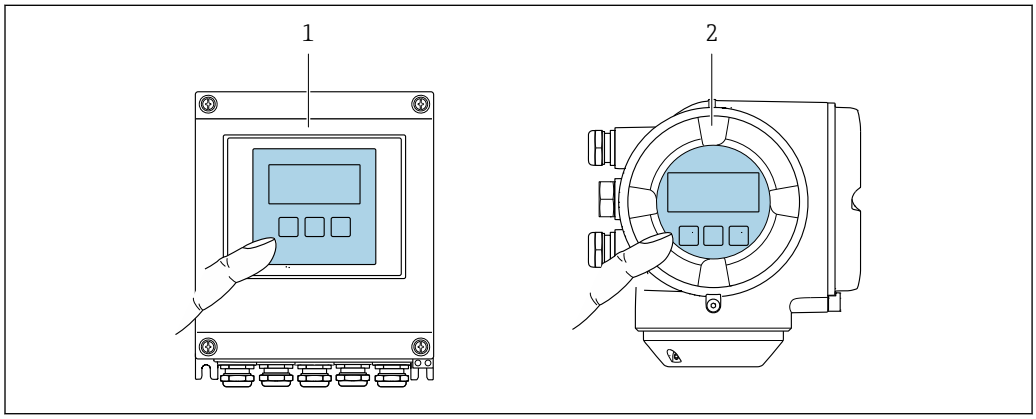

40 Operation with touch control

1 Proline 500 – digital
2 Proline 500

Display elements

- 4-line, illuminated, graphic display
- White background lighting; switches to red in event of device errors
- Format for displaying measured variables and status variables can be individually configured
- Permitted ambient temperature for the display: −20 to +60 °C (−4 to +140 °F)
  The readability of the display may be impaired at temperatures outside the temperature range.

Operating elements

- External operation via touch control (3 optical keys) without opening the housing: ⊞, ⊟, E
- Operating elements also accessible in the various zones of the hazardous area

Remote operation

→ 88

Service interface → 🗎 89

Supported operating tools

Different operating tools can be used for local or remote access to the measuring device. Depending on the operating tool used, access is possible with different operating units and via a variety of interfaces.

Supported operating tools	Operating unit	Interface	Additional information
Web browser	Notebook, PC or tablet with Web browser	▪ CDI-RJ45 service interface ▪ WLAN interface ▪ Ethernet-based fieldbus (EtherNet/IP, PROFINET)	Special Documentation for device → 🗎 248
DeviceCare SFE100	Notebook, PC or tablet with Microsoft Windows system	▪ CDI-RJ45 service interface ▪ WLAN interface ▪ Fieldbus protocol	→ 🗎 217
FieldCare SFE500	Notebook, PC or tablet with Microsoft Windows system	▪ CDI-RJ45 service interface ▪ WLAN interface ▪ Fieldbus protocol	→ 🗎 217

Other operating tools based on FDT technology with a device driver such as DTM/iDTM or DD/EDD can be used for device operation. These operating tools are available from the individual manufacturers. Integration into the following operating tools, among others, is supported:

- Field Device Manager (FDM) by Honeywell → www.honeywellprocess.com
- FieldMate by Yokogawa → www.yokogawa.com
- PACTWare → www.pactware.com

The associated device description files are available at: www.endress.com → Downloads

Web server

Thanks to the integrated Web server, the device can be operated and configured via a Web browser and via a service interface (CDI-RJ45) or via a WLAN interface. The structure of the operating menu is the same as for the local display. In addition to the measured values, status information on the device is also displayed and allows the user to monitor the status of the device. Furthermore the device data can be managed and the network parameters can be configured.

A device that has a WLAN interface (can be ordered as an option) is required for the WLAN connection: order code for "Display; operation", option G "4-line, illuminated; touch control + WLAN". The device acts as an Access Point and enables communication by computer or a mobile handheld terminal.

Supported functions
Data exchange between the operating unit (such as a notebook for example) and the measuring device:
- Upload the configuration from the measuring device (XML format, configuration backup)
- Save the configuration to the measuring device (XML format, restore configuration)
- Export event list (.csv file)
- Export parameter settings (.csv file or PDF file, document the measuring point configuration)
- Export the Heartbeat verification log (PDF file, only available with the "Heartbeat Verification" application package)

- Flash firmware version for device firmware upgrade, for instance
- Download driver for system integration
- Visualize up to 1000 saved measured values (only available with the **Extended HistoROM** application package → 246)

Web server special documentation → 248

HistoROM data management

The measuring device features HistoROM data management. HistoROM data management comprises both the storage and import/export of key device and process data, making operation and servicing far more reliable, secure and efficient.

When the device is delivered, the factory settings of the configuration data are stored as a backup in the device memory. This memory can be overwritten with an updated data record, for example after commissioning.

Additional information on the data storage concept

There are different types of data storage units in which device data are stored and used by the device:

	Device memory	T-DAT	S-DAT
Available data	▪ Event logbook such as diagnostic events for example ▪ Parameter data record backup ▪ Device firmware package ▪ Driver for system integration for exporting via Web server, e.g: EDS for EtherNet/IP	▪ Measured value logging ("Extended HistoROM" order option) ▪ Current parameter data record (used by firmware at run time) ▪ Peakhold indicator (min/max values) ▪ Totalizer values	▪ Sensor data: nominal diameter etc. ▪ Serial number ▪ Calibration data ▪ Device configuration (e.g. SW options, fixed I/O or multi I/O)
Storage location	Fixed on the user interface board in the connection compartment	Attachable to the user interface board in the connection compartment	In the sensor plug in the transmitter neck part

Data backup

Automatic

- The most important device data (sensor and transmitter) are automatically saved in the DAT modules
- If the transmitter or measuring device is replaced: once the T-DAT containing the previous device data has been exchanged, the new measuring device is ready for operation again immediately without any errors
- If the sensor is replaced: once the sensor has been replaced, new sensor data are transferred from the S-DAT in the measuring device and the measuring device is ready for operation again immediately without any errors
- If exchanging the electronics module (e.g. I/O electronics module): Once the electronics module has been replaced, the software of the module is compared against the current device firmware. The module software is upgraded or downgraded where necessary. The electronics module is available for use immediately afterwards and no compatibility problems occur.

Manual

Additional parameter data record (complete parameter settings) in the integrated device memory HistoROM backup for:

- Data backup function
  Backup and subsequent restoration of a device configuration in the device memory HistoROM backup
- Data comparison function
  Comparison of the current device configuration with the device configuration saved in the device memory HistoROM backup

Data transfer

Manual
- Transfer of a device configuration to another device using the export function of the specific operating tool, e.g. with FieldCare, DeviceCare or Web server: to duplicate the configuration or to store in an archive (e.g. for backup purposes)
- Transmission of the drivers for system integration via Web server, e.g.:
  EDS for EtherNet/IP

Event list

Automatic
- Chronological display of up to 20 event messages in the events list
- If the **Extended HistoROM** application package (order option) is enabled: up to 100 event messages are displayed in the events list along with a time stamp, plain text description and remedial measures
- The events list can be exported and displayed via a variety of interfaces and operating tools e.g. DeviceCare, FieldCare or Web server

Data logging

Manual
If the **Extended HistoROM** application package (order option) is enabled:
- Record up to 1 000 measured values via 1 to 4 channels
- User configurable recording interval
- Record up to 250 measured values via each of the 4 memory channels
- Export the measured value log via a variety of interfaces and operating tools e.g. FieldCare, DeviceCare or web server

16.12 Certificates and approvals

Currently available certificates and approvals can be called up via the product configurator.

CE mark	The device meets the legal requirements of the applicable EU Directives. These are listed in the corresponding EU Declaration of Conformity along with the standards applied. Endress+Hauser confirms successful testing of the device by affixing to it the CE mark.
RCM-tick symbol	The measuring system meets the EMC requirements of the "Australian Communications and Media Authority (ACMA)".
Ex approval	The devices are certified for use in hazardous areas and the relevant safety instructions are provided in the separate "Safety Instructions" (XA) document. Reference is made to this document on the nameplate.

Sanitary compatibility	▪ 3-A approval
	  ▪ Only measuring devices with the order code for "Additional approval", option LP "3A" have 3-A approval.
	  ▪ The 3-A approval refers to the measuring device.
	  ▪ When installing the measuring device, ensure that no liquid can accumulate on the outside of the measuring device.
	  Remote transmitters must be installed in accordance with the 3-A Standard.
	  ▪ Accessories (e.g. heating jacket, weather protection cover, wall holder unit) must be installed in accordance with the 3-A Standard.
	  Each accessory can be cleaned. Disassembly may be necessary under certain circumstances.
	▪ EHEDG-tested
	Only devices with the order code for "Additional approval", option LT "EHEDG" have been tested and meet the requirements of the EHEDG.
	To meet the requirements for EHEDG certification, the device must be used with process connections in accordance with the EHEDG position paper entitled "Easy Cleanable Pipe Couplings and Process Connections" (www.ehedg.org).
	▪ FDA
	▪ Food Contact Materials Regulation (EC) 1935/2004

Pharmaceutical compatibility	▪ FDA 21 CFR 177 ▪ USP <87> ▪ USP <88> Class VI 121 °C ▪ TSE/BSE Certificate of Suitability ▪ cGMP Devices with order code for "Test, certificate", option JG "Compliance with requirements derived from cGMP, declaration" are in accordance with cGMP requirements relating to the surfaces of wetted parts, design, FDA 21 CFR material conformity, USP Class VI tests and TSE/BSE-compliance. A manufacturer's declaration specific to the serial number is supplied with the device.
EtherNet/IP certification	The measuring device is certified and registered by the ODVA (Open Device Vendor Association). The measuring system meets all the requirements of the following specifications: ▪ Certified in accordance with the ODVA Conformance Test ▪ EtherNet/IP Performance Test ▪ EtherNet/IP PlugFest compliance ▪ The device can also be operated with certified devices of other manufacturers (interoperability)
Pressure Equipment Directive	▪ With the identification PED/G1/x (x = category) on the sensor nameplate, Endress+Hauser confirms conformity with the "Essential Safety Requirements" specified in Appendix I of the Pressure Equipment Directive 2014/68/EU. ▪ Devices not bearing this marking (PED) are designed and manufactured according to good engineering practice. They meet the requirements of Article 4 paragraph 3 of the Pressure Equipment Directive 2014/68/EU. The range of application is indicated in tables 6 to 9 in Annex II of the Pressure Equipment Directive 2014/68/EU.
Radio approval	The measuring device has radio approval. For detailed information regarding radio approval, see Special Documentation → 📄 248

Additional certification

CRN approval

Some device versions have CRN approval. A CRN-approved process connection with a CSA approval must be ordered for a CRN-approved device.

Tests and certificates

- EN10204-3.1 material certificate, parts and sensor housing in contact with medium
- Pressure testing, internal procedure, inspection certificate
- PMI test (XRF), internal procedure, wetted parts, test report
- Compliance with requirements derived from cGMP, Declaration
- EN10204-2.1 confirmation of compliance with the order and EN10204-2.2 test report

Testing of welded connections

Option	Test standard				Component	
	ISO 23277 AL2x (PT) ISO 10675-1 AL1 (RT, DR)	ASME B31.3 NFS	ASME VIII Div.1 Appx. 4+8	NORSOK M-601	Measuring tube	Process connection
CF	x				PT	RT
KK		x			PT	RT
KP			x		PT	RT
KR				x	VT, PT	VT, RT
K1	x				PT	DR
K2		x			PT	DR
K3			x		PT	DR
K4				x	VT, PT	VT, DR
PT = penetrant testing, RT = radiographic testing, VT = visual testing, DR = digital radiography All options with test report						

Other standards and guidelines

- EN 60529
  Degrees of protection provided by enclosures (IP code)
- IEC/EN 60068-2-6
  Environmental influences: Test procedure - Test Fc: vibrate (sinusoidal).
- IEC/EN 60068-2-31
  Environmental influences: Test procedure - Test Ec: shocks due to rough handling, primarily for devices.
- EN 61010-1
  Safety requirements for electrical equipment for measurement, control and laboratory use - general requirements
- IEC/EN 61326
  Emission in accordance with Class A requirements. Electromagnetic compatibility (EMC requirements).
- NAMUR NE 21
  Electromagnetic compatibility (EMC) of industrial process and laboratory control equipment
- NAMUR NE 32
  Data retention in the event of a power failure in field and control instruments with microprocessors
- NAMUR NE 43
  Standardization of the signal level for the breakdown information of digital transmitters with analog output signal.
- NAMUR NE 53
  Software of field devices and signal-processing devices with digital electronics
- NAMUR NE 80
  The application of the pressure equipment directive to process control devices

- NAMUR NE 105
  Specifications for integrating fieldbus devices in engineering tools for field devices
- NAMUR NE 107
  Self-monitoring and diagnosis of field devices
- NAMUR NE 131
  Requirements for field devices for standard applications
- NAMUR NE 132
  Coriolis mass meter

16.13 Application packages

Many different application packages are available to enhance the functionality of the device. Such packages might be needed to address safety aspects or specific application requirements.

The application packages can be ordered with the device or subsequently from Endress+Hauser. Detailed information on the order code in question is available from your local Endress+Hauser sales center or on the product page of the Endress+Hauser website: www.endress.com.

Detailed information on the application packages:
Special Documentation for the device → 248

Diagnostics functions

Package	Description
Extended HistoROM	Comprises extended functions concerning the event log and the activation of the measured value memory. Event log: Memory volume is extended from 20 message entries (standard version) to up to 100 entries. Data logging (line recorder): ▪ Memory capacity for up to 1000 measured values is activated. ▪ 250 measured values can be output via each of the 4 memory channels. The recording interval can be defined and configured by the user. ▪ Measured value logs can be accessed via the local display or operating tool e.g. FieldCare, DeviceCare or Web server.

Heartbeat Technology

Package	Description
Heartbeat Verification +Monitoring	**Heartbeat Verification** Meets the requirement for traceable verification to DIN ISO 9001:2008 Chapter 7.6 a) "Control of monitoring and measuring equipment". ▪ Functional testing in the installed state without interrupting the process. ▪ Traceable verification results on request, including a report. ▪ Simple testing process via local operation or other operating interfaces. ▪ Clear measuring point assessment (pass/fail) with high test coverage within the framework of manufacturer specifications. ▪ Extension of calibration intervals according to operator's risk assessment. **Heartbeat Monitoring** Continuously supplies data, which are characteristic of the measuring principle, to an external condition monitoring system for the purpose of preventive maintenance or process analysis. These data enable the operator to: ▪ Draw conclusions - using these data and other information - about the impact process influences (such as corrosion, abrasion, buildup etc.) have on the measuring performance over time. ▪ Schedule servicing in time. ▪ Monitor the process or product quality, e.g. gas pockets.

Concentration

Package	Description
Concentration	**Calculation and outputting of fluid concentrations** The measured density is converted to the concentration of a substance of a binary mixture using the "Concentration" application package: ▪ Choice of predefined fluids (e.g. various sugar solutions, acids, alkalis, salts, ethanol etc.) ▪ Common or user-defined units (°Brix, °Plato, % mass, % volume, mol/l etc.) for standard applications. ▪ Concentration calculation from user-defined tables.

Petroleum

Package	Description
Petroleum	The most important parameters for the Oil & Gas Industry can be calculated and displayed with this application package. ▪ Corrected volume flow and calculated reference density in accordance with the "API Manual of Petroleum Measurement Standards, Chapter 11.1" ▪ Water content, based on density measurement ▪ Weighted mean of the density and temperature

16.14 Accessories

Overview of accessories available for order → 215

16.15 Supplementary documentation

For an overview of the scope of the associated Technical Documentation, refer to the following:
- *W@M Device Viewer* (www.endress.com/deviceviewer): Enter the serial number from nameplate
- *Endress+Hauser Operations App*: Enter the serial number from the nameplate or scan the 2D matrix code (QR code) on the nameplate

Standard documentation **Brief Operating Instructions**

Brief Operating Instructions for the sensor

Measuring device	Documentation code
Proline Promass Q	KA01262D

Brief Operating Instructions for transmitter

Measuring device	Documentation code
Proline 500 – digital	KA01346D
Proline 500	KA01347D

Technical Information

Measuring device	Documentation code
Promass Q 500	TI01287D

Description of Device Parameters

Measuring device	Documentation code
Promass 500	GP01120D

Device-dependent additional documentation

Safety instructions

Safety instructions for electrical equipment for hazardous areas.

Contents	Documentation code Measuring device
ATEX/IECEx Ex i	XA01473D
ATEX/IECEx Ex ec	XA01474D
cCSAus IS	XA01475D
cCSAus Ex i	XA01509D
cCSAus Ex nA	XA01510D
INMETRO Ex i	XA01476D
INMETRO Ex ec	XA01477D
NEPSI Ex i	XA01478D
NEPSI Ex nA	XA01479D
NEPSI Ex i	XA01658D
NEPSI Ex nA	XA01659D
JPN	XA01780D

Special Documentation

Contents	Documentation code
Information on the Pressure Equipment Directive	SD01614D
Radio approvals for WLAN interface for A309/A310 display module	SD01793D
Web server	SD01970D
Heartbeat Technology	SD01983D
Concentration measurement	SD02006D
Petroleum	SD02012D

Installation Instructions

Contents	Comment
Installation instructions for spare part sets and accessories	▪ Access the overview of all the available spare part sets via *W@M Device Viewer* → 🗎 213 ▪ Accessories available for order with Installation Instructions → 🗎 215

Index

0 ... 9

3-A approval 244

A

Access authorization to parameters
  Read access 79
  Write access 79
Access code 79
  Incorrect input 79
Accuracy 229
Adapting the diagnostic behavior 191
Additional certification 245
Ambient temperature
  Influence 231
Application 219
Application packages 246
Applicator 220
Approvals 243

C

Cable entries
  Technical data 228
Cable entry
  Degree of protection 65
CE mark 10, 243
Certificates 243
cGMP 244
Check
  Installation 33
Checklist
  Post-connection check 65
  Post-installation check 33
Cleaning
  Exterior cleaning 212
Climate class 233
Commissioning 111
  Advanced settings 144
  Configuring the measuring device 112
Connecting cable 34
Connecting the connecting cable
  Proline 500 – digital transmitter 44
  Proline 500 terminal assignment 50
  Proline 500 transmitter 53
  Sensor connection housing, Proline 500 50
  Sensor connection housing, Proline 500 - digital . . 40
  Terminal assignment of Proline 500 - digital 40
Connecting the measuring device
  Proline 500 50
  Proline 500 – digital 40
Connecting the signal cable/supply voltage cable
  Proline 500 – digital transmitter 45
Connecting the signal cables 54
Connecting the supply voltage cables 54
Connection
  see Electrical connection
Connection preparations 39
Connection tools 34
Context menu
  Calling up 75
  Closing 75
  Explanation 75
Current consumption 228
Cyclic data transmission 95

D

Declaration of Conformity 10
Define access code 165
Degree of protection 65, 233
Density 235
Design fundamentals
  Maximum measured error 232
  Repeatability 232
Designated use 9
Device components 14
Device description files 94
Device documentation
  Supplementary documentation 8
Device locking, status 169
Device name
  Sensor 19
  Transmitter 17
Device repair 213
Device revision 94
Device type ID 94
DeviceCare 93
  Device description file 94
Diagnostic behavior
  Explanation 187
  Symbols 187
Diagnostic information
  Communication interface 191
  Design, description 187, 190
  DeviceCare 189
  FieldCare 189
  Light emitting diodes 183
  Local display 186
  Overview 192
  Remedial measures 192
  Web browser 188
Diagnostic list 206
Diagnostic message 186
Diagnostics
  Symbols 186
DIP switch
  see Write protection switch
Direct access 77
Direct access code 71
Disabling write protection 164
Display
  see Onsite display
Display area
  For operational display 70

In the navigation view . . . 72
Display values
For locking status . . . 169
Disposal . . . 214
Document
Function . . . 6
Symbols . . . 6
Document function . . . 6
Down pipe . . . 23

E

Editing view . . . 73
Input screen . . . 74
Using operating elements . . . 73, 74
EHDEG-certified . . . 244
Electrical connection
Degree of protection . . . 65
Measuring device . . . 34
Operating tools
Via Ethernet network . . . 88
Via service interface (CDI-RJ45) . . . 89
Via WLAN interface . . . 90
RSLogix 5000 . . . 88
Web server . . . 89
WLAN interface . . . 90
Electromagnetic compatibility . . . 234
Electronics module . . . 14
Enabling write protection . . . 164
Enabling/disabling the keypad lock . . . 80
Endress+Hauser services
Maintenance . . . 212
Repair . . . 213
Environment
Mechanical load . . . 234
Storage temperature . . . 233
Vibration- and shock-resistance . . . 233
Error messages
see Diagnostic messages
EtherNet/IP
Diagnostic information . . . 191
EtherNet/IP certification . . . 244
Event list . . . 206
Event logbook . . . 206
Ex approval . . . 243
Extended order code
Sensor . . . 19
Transmitter . . . 17
Exterior cleaning . . . 212

F

FDA . . . 244
Field of application
Residual risks . . . 10
FieldCare . . . 92
Device description file . . . 94
Establishing a connection . . . 92
Function . . . 92
User interface . . . 93
Filtering the event logbook . . . 207
Firmware
Release date . . . 94
Version . . . 94
Firmware history . . . 211
Fix assembly . . . 191
Flow direction . . . 23, 28
Flow limit . . . 236
Food Contact Materials Regulation . . . 244
Function check . . . 111
Functions
see Parameter

G

Galvanic isolation . . . 227

H

Hardware write protection . . . 166
Help text
Calling up . . . 78
Closing . . . 78
Explanation . . . 78
HistoROM . . . 158

I

Identifying the measuring device . . . 16
Incoming acceptance . . . 16
Influence
Ambient temperature . . . 231
Medium pressure . . . 231
Medium temperature . . . 231
Information on the document . . . 6
Inlet runs . . . 24
Input . . . 220
Inspection
Received goods . . . 16
Inspection check
Connection . . . 65
Installation . . . 22
Installation conditions
Down pipe . . . 23
Inlet and outlet runs . . . 24
Installation dimensions . . . 24
Mounting location . . . 22
Orientation . . . 23
Rupture disk . . . 25
Vibrations . . . 25
Installation dimensions . . . 24

L

Languages, operation options . . . 240
Line recorder . . . 176
Local display . . . 240
Navigation view . . . 71
see Diagnostic message
see In alarm condition
see Operational display
Low flow cut off . . . 227

M

Main electronics module . . . 14

Maintenance tasks 212
Managing the device configuration 158
Manufacturer ID 94
Manufacturing date 17, 19
Materials 237
Maximum measured error 229
Measured values
see Process variables
Measuring and test equipment 212
Measuring device
Configuration 112
Conversion 213
Disposal 214
Mounting the sensor 28
Preparing for electrical connection 39
Preparing for mounting 28
Removing 214
Repairs 213
Structure 14
Switch-on 111
Measuring principle 219
Measuring range
Calculation example for gas 220
For gases 220
For liquids 220
Measuring range, recommended 236
Measuring system 219
Mechanical load 234
Medium pressure
Influence 231
Medium temperature
Influence 231
Menu
Diagnostics 205
Setup 113
Menus
For measuring device configuration 112
For specific settings 144
Mounting dimensions
see Installation dimensions
Mounting location 22
Mounting preparations 28
Mounting tools 28

N

Nameplate
Sensor 19
Transmitter 17
Navigation path (navigation view) 71
Navigation view
In the submenu 71
In the wizard 71
Numeric editor 73

O

Onsite display
Numeric editor 73
Text editor 73
Operable flow range 221
Operating elements 75, 187
Operating keys
see Operating elements
Operating menu
Menus, submenus 67
Structure 67
Submenus and user roles 68
Operating philosophy 68
Operation 169
Operation options 66
Operational display 69
Operational safety 10
Order code 17, 19
Orientation (vertical, horizontal) 23
Outlet runs 24
Output 222
Output signal 222

P

Packaging disposal 22
Parameter
Changing 78
Entering values or text 78
Parameter settings
Administration (Submenu) 161
Advanced setup (Submenu) 145
Calculated values (Submenu) 145
Communication (Submenu) 115
Configuration backup (Submenu) 158
Current input 119
Current input (Wizard) 119
Current input 1 to n (Submenu) 172
Current output 121
Current output (Wizard) 121
Data logging (Submenu) 176
Define access code (Wizard) 160
Device information (Submenu) 209
Diagnostics (Menu) 205
Display (Submenu) 150
Display (Wizard) 136
I/O configuration 119
I/O configuration (Submenu) 119
Low flow cut off (Wizard) 142
Measured variables (Submenu) 170
Partially filled pipe detection (Wizard) 143
Pulse/frequency/switch output 125
Pulse/frequency/switch output (Wizard)
. . . . . 125, 127, 131
Pulse/frequency/switch output 1 to n (Submenu) 174
Relay output 133
Relay output 1 to n (Submenu) 174
Relay output 1 to n (Wizard) 133
Reset access code (Submenu) 160
Select medium (Wizard) 117
Sensor adjustment (Submenu) 146
Setup (Menu) 113
Simulation (Submenu) 161
Status input 120
Status input (Submenu) 120

Status input 1 to n (Submenu) 172
System units (Submenu) 113
Totalizer (Submenu) 171
Totalizer 1 to n (Submenu) 147
Totalizer handling (Submenu) 175
Value current output 1 to n (Submenu) 173
Web server (Submenu) 87
WLAN settings (Wizard) 156
Zero point adjustment (Submenu) 147
Performance characteristics 229
Pharmaceutical compatibility 244
Post-connection check (checklist) 65
Post-installation check 111
Post-installation check (checklist) 33
Potential equalization 58
Power consumption 228
Power supply failure 228
Pressure Equipment Directive 244
Pressure loss 237
Pressure-temperature ratings 235
Process connections 239
Process variables
Calculated 220
Measured 220
Product safety 10
Proline 500 – digital transmitter
Connecting the signal cable/supply voltage cable . . 45
Proline 500 connecting cable terminal assignment
Sensor connection housing 50
Protecting parameter settings 164

R

Radio approval 244
RCM-tick symbol 243
Read access 79
Reading measured values 169
Reading out diagnostic information, EtherNet/IP . . . 191
Recalibration 212
Reference operating conditions 229
Registered trademarks 8
Remedial measures
Calling up 188
Closing 188
Remote operation 240
Repair 213
Repair of a device 213
Repairs
Notes 213
Repeatability 230
Replacement
Device components 213
Requirements for personnel 9
Response time 230
Return 213
Rupture disk
Safety instructions 25
Triggering pressure 236

S

Safety 9
Sanitary compatibility 244
Sensor
Mounting 28
Sensor housing 235
Serial number 17, 19
Setting the operating language 111
Settings
Adapting the measuring device to the process conditions 175
Administration 159
Advanced display configurations 150
Communication interface 115
Current input 119
Current output 121
Device reset 209
Device tag 113
I/O configuration 119
Local display 136
Low flow 142
Managing the device configuration 158
Medium 117
Operating language 111
Partial filled pipe detection 143
Pulse output 125
Pulse/frequency/switch output 125, 127
Relay output 133
Resetting the totalizer 175
Sensor adjustment 146
Simulation 161
Status input 120
Switch output 131
System units 113
Totalizer 147
Totalizer reset 175
WLAN 156
Showing data logging 176
Signal on alarm 225
Software release 94
Spare part 213
Spare parts 213
Special connection instructions 59
Special mounting instructions
Sanitary compatibility 25
Standards and guidelines 245
Status area
For operational display 69
In the navigation view 71
Status signals 186, 189
Storage concept 242
Storage conditions 21
Storage temperature 21
Storage temperature range 233
Structure
Measuring device 14
Operating menu 67
Submenu
Administration 159, 161

Advanced setup 144, 145
Calculated values 145
Communication 115
Configuration backup 158
Current input 1 to n 172
Data logging 176
Device information 209
Display 150
Event list 206
I/O configuration 119
Input values 172
Measured values 169
Measured variables 170
Output values 173
Overview 68
Process variables 145
Pulse/frequency/switch output 1 to n 174
Relay output 1 to n 174
Reset access code 160
Sensor adjustment 146
Simulation 161
Status input 120
Status input 1 to n 172
System units 113
Totalizer 171
Totalizer 1 to n 147
Totalizer handling 175
Value current output 1 to n 173
Web server 87
Zero point adjustment 147
Supply voltage 228
Surface roughness 239
Switch output 224
Symbols
Controlling data entries 74
For communication 69
For diagnostic behavior 69
For locking 69
For measured variable 70
For measurement channel number 70
For menus 72
For parameters 72
For status signal 69
For submenu 72
For wizard 72
In the status area of the local display 69
Input screen 74
Operating elements 73
System design
Measuring system 219
see Measuring device design
System file
Release date 94
Source 94
Version 94
System integration 94

T

Technical data, overview 219
Temperature range
Ambient temperature range for display 240
Medium temperature 234
Storage temperature 21
Terminal assignment 38
Terminal assignment of connecting cable for Proline 500- digital
Sensor connection housing 40
Terminals 228
Tests and certificates 245
Text editor 73
Tool tip
see Help text
Tools
Electrical connection 34
For mounting 28
Transport 21
Totalizer
Configuration 147
Transmitter
Turning the display module 33
Turning the housing 32
Transporting the measuring device 21
Troubleshooting
General 180
TSE/BSE Certificate of Suitability 244
Turning the display module 33
Turning the electronics housing
see Turning the transmitter housing
Turning the transmitter housing 32

U

Use of the measuring device
Borderline cases 9
Incorrect use 9
see Designated use
User interface
Current diagnostic event 205
Previous diagnostic event 205
User roles 68
USP Class VI 244

V

Version data for the device 94
Vibration- and shock-resistance 233
Vibrations 25

W

W@M 212, 213
W@M Device Viewer 16, 213
Weight
SI units 237
Transport (notes) 21
US units 237
Wizard
Current input 119
Current output 121
Define access code 160
Display 136

Low flow cut off 142
Partially filled pipe detection 143
Pulse/frequency/switch output 125, 127, 131
Relay output 1 to n 133
Select medium 117
WLAN settings 156
WLAN settings 156
Workplace safety 10
Write access 79
Write protection
Via access code 165
Via write protection switch 166
Write protection switch 166

71505929

www.addresses.endress.com

Endress+Hauser

People for Process Automation