KA01676G/00/EN/01.23-00
71629416
2023-10-06

Brief Operating Instructions
Float level gauge LT5

Mechanical tank gauge for measuring liquid level

These Instructions are Brief Operating Instructions; they are not a substitute for the Operating Instructions pertaining to the device.

Detailed information about the device can be found in the Operating Instructions and the other documentation:
Available for all device versions via:
- Internet: www.endress.com/deviceviewer
- Smart phone/tablet: *Endress+Hauser Operations App*

Endress+Hauser
People for Process Automation

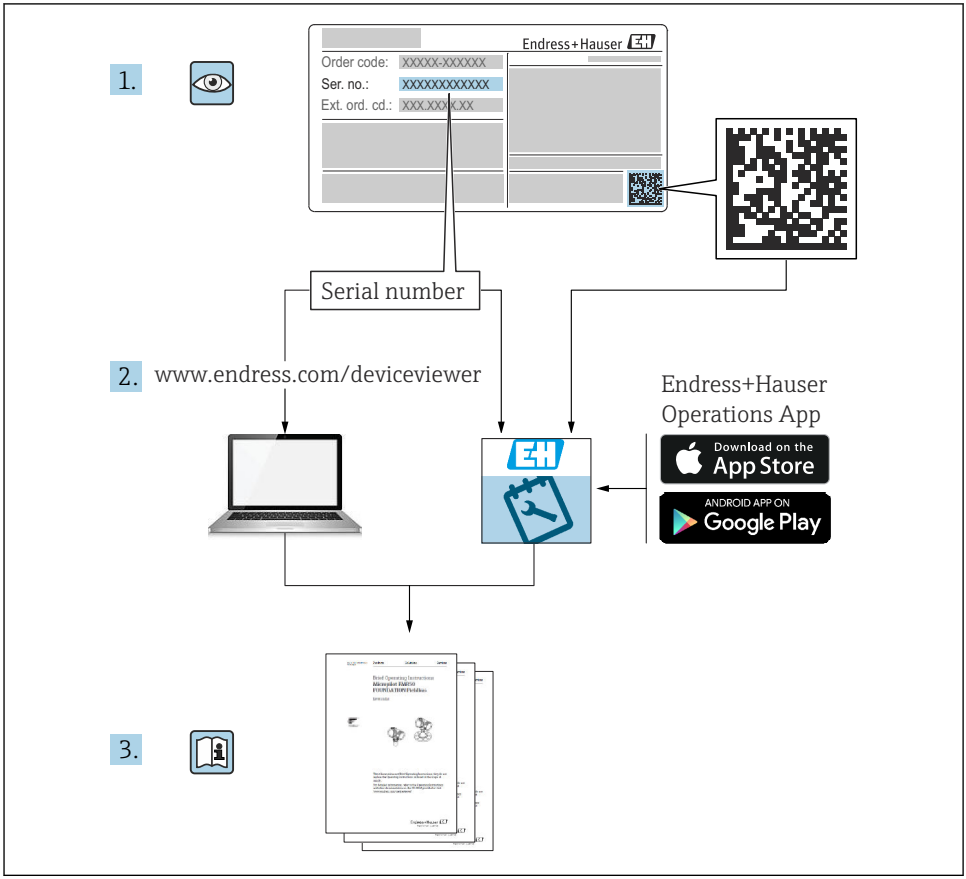
1.
Endress+Hauser
Order code: XXXXX-XXXXXX
Ser. no.: XXXXXXXXXXXX
Ext. ord. cd.: XXX.XXX.XX
Serial number
2.
www.endress.com/deviceviewer
Endress+Hauser
Operations App
Download on the
App Store
ANDROID APP ON
Google Play
3.

A0023555

Table of contents

1 Document information

1.1 Symbols used

1.1.1 Safety symbols

DANGER
This symbol alerts you to a dangerous situation. Failure to avoid this situation will result in serious or fatal injury.

WARNING
This symbol alerts you to a dangerous situation. Failure to avoid this situation can result in serious or fatal injury.

CAUTION
This symbol alerts you to a dangerous situation. Failure to avoid this situation can result in minor or medium injury.

NOTICE
This symbol contains information on procedures and other facts which do not result in personal injury.

1.1.2 Electrical symbols

Alternating current

Direct current and alternating current

Direct current

Ground connection

A grounded terminal which, as far as the operator is concerned, is grounded via a grounding system.

Protective earth (PE)

Ground terminals that must be connected to ground prior to establishing any other connections.

The ground terminals are located on the interior and exterior of the device:
- Interior ground terminal: protective earth is connected to the mains supply.
- Exterior ground terminal: device is connected to the plant grounding system.

1.1.3 Tool symbols

Phillips head screwdriver

Flat blade screwdriver

Torx screwdriver

Allen key

Open-ended wrench

1.1.4 Symbols for certain types of information and graphics

Permitted
Procedures, processes or actions that are permitted

Preferred
Procedures, processes or actions that are preferred

Forbidden
Procedures, processes or actions that are forbidden

Tip
Indicates additional information

Reference to documentation

Reference to graphic

Notice or individual step to be observed

1., 2., 3.
Series of steps

Result of a step

Visual inspection

Operation via operating tool

Write-protected parameter

1, 2, 3, ...
Item numbers

A, B, C, ...
Views

→ **Safety instructions**
Observe the safety instructions contained in the associated Operating Instructions

Temperature resistance of the connection cables
Specifies the minimum value of the temperature resistance of the connection cables

1.2 Documentation

The following documents can be accessed from the download area of the Endress+Hauser website (www.endress.com/downloads).

For an overview of the enclosed relevant technical documentation, refer to the following: *W@M Device Viewer* (www.endress.com/deviceviewer): Enter the serial number on the nameplate.

1.2.1 Technical Information (TI)

Planning aid
This document contains all technical data related to the device, as well as an overview of accessories and other products that can be ordered for this device.

1.2.2 Brief Operating Instructions (KA)

Guide that takes you quickly to the 1st measured value
The Brief Operating Instructions contain all the essential information from incoming acceptance to initial commissioning.

1.2.3 Operating Instructions (BA)

Operating instructions contain all information required for all stages in the device life cycle (from product identification, incoming acceptance, storage, mounting, connection, operation and setting to troubleshooting, maintenance and disposal).

2 Basic safety instructions

2.1 Requirements for personnel

The personnel for installation, commissioning, diagnostics and maintenance must fulfill the following requirements:
- Be specialists who are trained and have a relevant qualification for this specific function and task.
- Be authorized by the plant owner-operator.
- Be familiar with local/national regulations.
- Before starting work, read and understand the instructions in the Operating Instructions and supplementary documentation as well as the certificates (depending on the application).
- Follow instructions and comply with basic conditions.

The operating personnel must fulfill the following requirements:
- Be instructed and authorized according to the requirements of the task by the facility's owner-operator.
- Follow the instructions in this manual.

2.2 Designated use

Application and measured materials
Depending on the version ordered, the device can also be used with potentially explosive, flammable, poisonous or oxidizing materials.

Devices that are used in hazardous areas have corresponding labels on their nameplates.

To ensure that the device remains in proper condition for the operation time:
- Only use the device in full compliance with the data on the nameplate and the general conditions listed in the Operating Instructions and supplementary documentation.
- Check the nameplate to verify if the device can be put to its intended use in hazardous areas.
- If the device is not operated at an atmospheric temperature, compliance with the relevant basic conditions specified in the relevant device documentation is absolutely essential.
- Protect the device permanently against corrosion from environmental influences.
- Observe the limit values in the "Technical Information".

The manufacturer is not liable for damage caused by improper or non-designated use.

2.3 Workplace safety

For work on and with the device:
- Wear the required personal protective equipment according to local/national regulations.

2.4 Operational safety

Risk of injury!
- ▶ Operate the device in proper technical conditions and fail-safe conditions only.
- ▶ The plant owner-operator is responsible for interference-free operation of the device.

Modifications to the device

Unauthorized modifications to the device are not permitted and can lead to unforeseeable dangers:
- ▶ If modifications are nevertheless required, contact your Endress+Hauser Sales Center.

Repair

To ensure continued operational safety and reliability:
- ▶ Carry out repairs on the device only if they are expressly permitted.
- ▶ Observe local/national regulations pertaining to repair of an electrical device.
- ▶ Use only original spare parts and accessories from Endress+Hauser.

Ex-area

Observe the following notes to eliminate the risk of danger to persons or the facility when the device is used in Ex-areas (e.g. explosion protection, pressure equipment safety):
- ▶ Check the model nameplate to ensure that the ordered device is explosion proof.
- ▶ Observe the specifications in the separate supplementary documentation attached to these Instructions.

2.5 Product safety

This device was designed in accordance with GEP (Good Engineering Practice) to meet state-of-the-art safety requirements, has been tested and left the factory in a condition in which it is safe to operate. It meets the general safety standards and legal requirements.

3 Product description

3.1 Designated use

Float level gauge LT5 is an important measuring instrument in the process industry. The mechanical construction does not require a power supply and it is easy to install. Since it can be used for high-precision liquid level measurement and remote indication detection, it is ideal for the following operations:

- Inventory management
- Batch processing
- Management of a process tank
- Safe tank operation

3.2 Delivery examples

The packaging method will vary depending on the order code, etc. For flange type, the sheave elbow will be delivered in a separate packaging box.

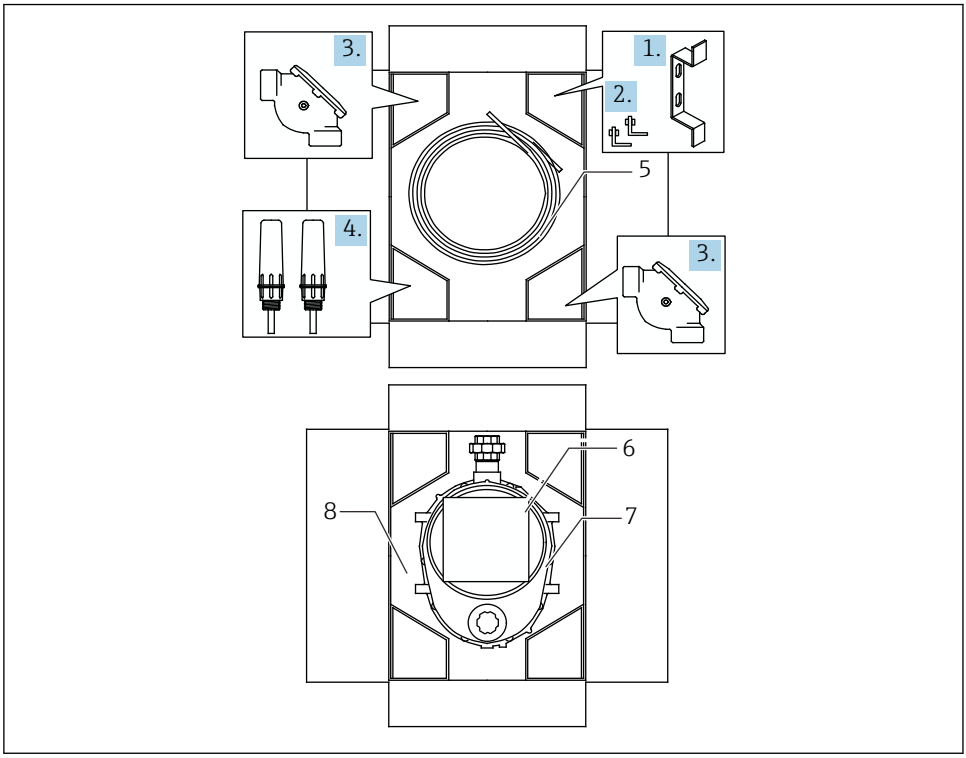

1 Packaging

1 *Gauge supporter*
2 *Anchor hook*
3 *Sheave elbow*
4 *Top anchor*
5 *Guide wire*
6 *Measuring tape*
7 *Gauge head*
8 *Float (below the gauge head)*

4 Incoming acceptance and product identification

4.1 Incoming acceptance

Upon receipt of the goods, check the following:
- Are the order codes on the delivery note and the product label identical?
- Are the goods undamaged?
- Do the nameplate data match the ordering information on the delivery note?
- If required (see nameplate): Are the Safety Instructions (XA) enclosed?

If one of these conditions is not satisfied, contact your Endress+Hauser Sales Center.

4.2 Product identification

The following options are available for identification of the device:
- Nameplate specifications
- Extended order code with breakdown of the device features on the delivery note
- *W@M Device Viewer* (www.endress.com/deviceviewer): Enter the serial number from the nameplate; this will display all the information about the device.

4.3 Manufacturer address

Endress+Hauser Yamanashi Co., Ltd.
406-0846
862-1 Mitsukunugi, Sakaigawa-cho, Fuefuki-shi, Yamanashi

4.4 Storage and transport

4.4.1 Storage conditions

- Storage temperature: −20 to +70 °C (−4 to 158 °F)
- Store the device in its original packaging.

4.4.2 Transport

NOTICE

The housing may become damaged or dislodged.
Risk of injury
- ▶ When transporting the device to the measuring point, either use the device's original packaging or hold by the process connector.
- ▶ Secure a hoisting device (such as a hoisting ring or a lifting eye bolt) to the process connector, not to the housing. Pay attention to the device's center of gravity to prevent unexpected tilting.
- ▶ Comply with the safety precautions and transportation conditions for devices that weigh 18 kg (39.6 lbs) or more (IEC61010).

5 Installation

5.1 Measuring tape and wire lengths

The lengths of the measuring tape and wire are longer than the actual measurable lengths for piping purposes, and they vary depending on the option. The following tables show the actual lengths according to options in 060 for each option of specification 070. Note that the maximum measured value that can be displayed on a gauge head corresponds to the measurement ranges. See the following tables and select the appropriate length accordingly.

1. Measuring tape SUS316, CRT

060 measurement range		Length (total length)	Perforated tape (measurement length)	Non-perforated tape	Spare parts
1	2.5 m	13 m	7 m	6 m	56004412
2	5 m	13 m	7 m	6 m	56004412
3	10 m	24 m	12 m	12 m	017860-5302
4	16 m	45 m	22 m	23 m	017860-5304
5	20 m	45 m	22 m	23 m	017860-5304
6	30 m	65 m	32 m	33 m	017860-5305
F	60 ft	134.50 ft	69.89 ft	65.61 ft	Contact Endress+Hauser
H	100 ft	216.52 ft	108.26 ft	108.26 ft	Contact Endress+Hauser

2. Measuring tape SUS316, tank top installation

060 measurement range		Length (total length)	Perforated tape (measurement length)	Non-perforated tape	Spare parts
1	2.5 m	7.15 m	7 m	0.15 m	017860-5306
2	5 m	7.15 m	7 m	0.15 m	017860-5306
3	10 m	12.15 m	12 m	0.15 m	017860-5307
4	16 m	22.15 m	22 m	0.15 m	017860-5309
5	20 m	22.15 m	22 m	0.15 m	017860-5309
6	30 m	32.15 m	32 m	0.15 m	017860-5310
F	60 ft	72.17 ft	69.89 ft	3.28 ft	Contact Endress+Hauser
H	100 ft	111.54 ft	108.26 ft	3.28 ft	Contact Endress+Hauser

3. Measuring tape SUS316, seal pot/BT

060 measurement range		Length (total length)	Perforated tape (measurement length)	Non-perforated tape	Spare parts
1	2.5 m	24 m	7 m	17 m	Contact Endress+Hauser
2	5 m	24 m	7 m	17 m	Contact Endress+Hauser
3	10 m	35 m	12 m	23 m	Contact Endress+Hauser
4	16 m	55 m	22 m	33 m	Contact Endress+Hauser
5	20 m	55 m	22 m	33 m	Contact Endress+Hauser
6	30 m	75 m	32 m	43 m	017860-5210
F	60 ft	167.31 ft	69.89 ft	98.42 ft	Contact Endress+Hauser
H	100 ft	249.33 ft	108.26 ft	141.07 ft	Contact Endress+Hauser

4. Measuring tape SUS316 + Wire SUS316, FRT

060 measurement range		Length (total length)	Perforated tape (measurement length)	Non-perforated tape	Wire	Spare parts
1	2.5 m	16 m	6.7 m	0.3 m	9 m	017860-0005
2	5 m	16 m	6.7 m	0.3 m	9 m	017860-0005
3	10 m	26 m	11.7 m	0.3 m	14 m	017860-0007
4	16 m	46 m	21.7 m	0.3 m	24 m	017860-0011
5	20 m	46 m	21.7 m	0.3 m	24 m	017860-0011
6	30 m	66 m	31.7 m	0.3 m	34 m	017860-0013
F	60 ft	147.63 ft	67.91 ft	67.91 ft	78.74 ft	Contact Endress+Hauser
H	100 ft	219.80 ft	107.28 ft	67.91 ft	111.54 ft	Contact Endress+Hauser

5. Measuring tape SUS316 + PFA-coating SUS316 wire, seal pot/CRT

060 measurement range		Length (total length)	Perforated tape (measurement length)	Non-perforated tape	Wire	Spare parts
1	2.5 m	18 m	6.7 m	0.3 m	11 m	017860-0006
2	5 m	18 m	6.7 m	0.3 m	11 m	017860-0006
3	10 m	28 m	11.7 m	0.3 m	16 m	017860-0008
4	16 m	48 m	21.7 m	0.3 m	26 m	017860-0012
5	20 m	48 m	21.7 m	0.3 m	26 m	017860-0012
6	30 m	68 m	31.7 m	0.3 m	36 m	017860-0014

060 measurement range		Length (total length)	Perforated tape (measurement length)	Non-perforated tape	Wire	Spare parts
F	60 ft	154.19 ft	67.91 ft	67.91 ft	86.30 ft	Contact Endress+Hauser
H	100 ft	226.37 ft	107.28 ft	67.91 ft	118.11 ft	Contact Endress+Hauser

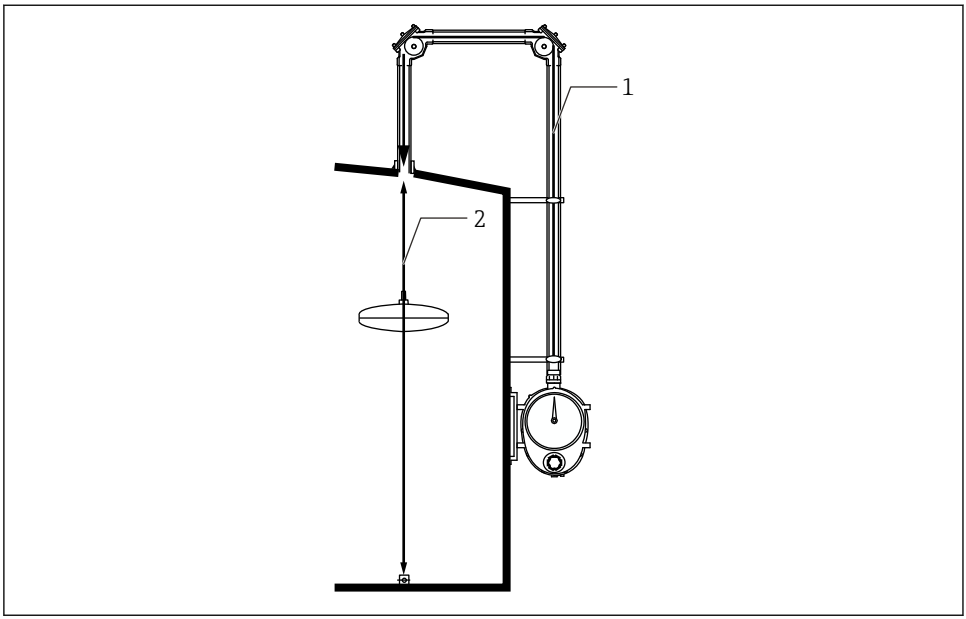

2 Measuring tape and wire (example: option 1 for specification 070 and option 5 for specification 060)

1 Perforated tape
2 Non-perforated tape / wire

In the figure above, the maximum measuring distance is 22 mm with up to 23 m of extra length. For this reason, the total length of a measuring tape is 45 m.

5.2 Sealing materials for wetted liquid and wetted gas parts

5.2.1 List of materials

Product name	Component name	Name of sealing material	Type of sealing material	Packing and O-ring materials
LT5-1	Gauge head	Rear cover	Cover packing	V#6502
		Check shaft	O-ring	FKM
		Sprocket shaft	Oil seal	FKM
		Blind board	Packing	NBR
	90 ° sheave elbow	Aluminum sheave elbow	Cover packing	V#6502
		Stainless steel sheave elbow		
		Bearing	O-ring	Silicone rubber
	U-seal pot	Aluminum sheave elbow	Cover packing	V#6502
			Bearing O-ring	Silicone rubber
		Stainless steel sheave elbow	Cover packing	V#6502
			Bearing O-ring	Silicone rubber
		PVC sheave elbow	Cover packing	V#6502
			Bearing O-ring	PTFE
	Top anchor	Aluminum, threaded type	Cover packing	V#6502
		Stainless steel, tank welding type		
	Top anchor	Aluminum, flange, threaded type		
		Stainless steel, flange welding type	Spring negator packing	
LT5-4/ LT5-6	Gauge head	Rear cover	Cover packing	PTFE
		Check handle	Gland packing	PTFE/CR
		Internal magnet cover	O-ring	PTFE
		External magnet cover	O-ring	NBR *Ammonia specifications CR
		Coupling	O-ring	PTFE
	Gate valve	Shaft	Shaft packing	PTFE
		Cap nut	Packing	PTFE
LT5-4	90° sheave elbow	Cover	Cover packing	PTFE
		Bearing	O-ring	PTFE
	135° sheave elbow	Cover	Cover packing	PTFE

Product name	Component name	Name of sealing material	Type of sealing material	Packing and O-ring materials
		Bearing	O-ring	PTFE
	Top anchor	Aluminum-flange integrated type	Spring negator packing	PTFE
		Stainless steel, flange welding type		
LT5-6	90° sheave elbow	Cover	Cover packing	PTFE
		Bearing	O-ring	PTFE
	135° sheave elbow	Cover	Cover packing	PTFE
		Bearing	O-ring	PTFE
	Top anchor	Iron, flange welding type	Spring negator packing	PTFE
		Stainless steel, flange welding type		

5.3 Material certificates

When material certificates are required, order them when ordering the products. Certificates can be provided for the following parts.

- High-pressure specification iron gauge head (the certificate for the flange is the same as it undergoes integrated-type casting with the gauge head), cover, magnet cover, check shaft (only those without hoisting), plug
- Stainless steel measuring tape and wire (excluding PFA-coated wire)
- Stainless steel float
- Stainless steel or iron high-pressure top anchor main body, cover, flange
- Stainless steel guide wire (excluding PFA-coated wire)
- Stainless steel anchor hook
- Main unit of high-pressure specification iron sheave elbow (the certificate for the flange is the same as it undergoes integrated-type casting with the main unit of sheave elbow), cover
- Stainless steel gate valve

5.4 Guide wire installation

Installation procedure

- Do not bend the guide wires.
- Install one of the two guide wires in the perpendicular direction and the other guide wire in the parallel direction.
- Use two packings between the top anchor and the mounting flange on the tank side with a washer in between the two packings. Check before placing the guide wires.
- Ensure that the guide wires and the anchor hooks at the bottom of a tank are strong enough because they are difficult to fix once actual liquid has been injected.

1. Open the cover of the top anchor located at the top of the tank.
2. Pass the guide wire through the float's guide ring at the tank bottom and secure it tightly to the anchor hook using a nut and a bolt.

3. Cut and bend the tip of the guide wire so that it does not get caught on the float.
   ↳ The tip of the guide wire is connected to (b) so that it is smaller than the dimension of the anchor hook (a).
   Coil the guide wire one to two times from the inside of the anchor hook, and then pass it through the hole and coil it one to two times on the outside. Adjust the number of coils as necessary.

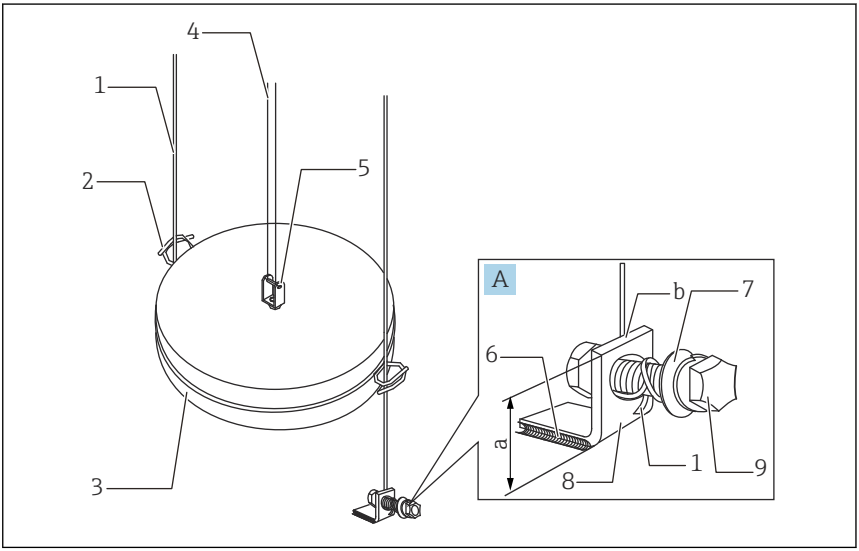

3 Guide wire installation 1

A Anchor hook
1 Guide wire
2 Guide ring
3 Float
4 Measuring tape
5 Universal joint
6 Welded part
7 Washer
8 Anchor hook
9 Bolt

4. Secure the guide wire in place while extending it to the tank top again.
5. Bend the tip of the guide wire along the shaft and then cut it off, leaving an excess of approximately 100 mm.
6. Tighten the end nuts [1] and [2].

7. Tighten nut [3] to fully activate the spring.

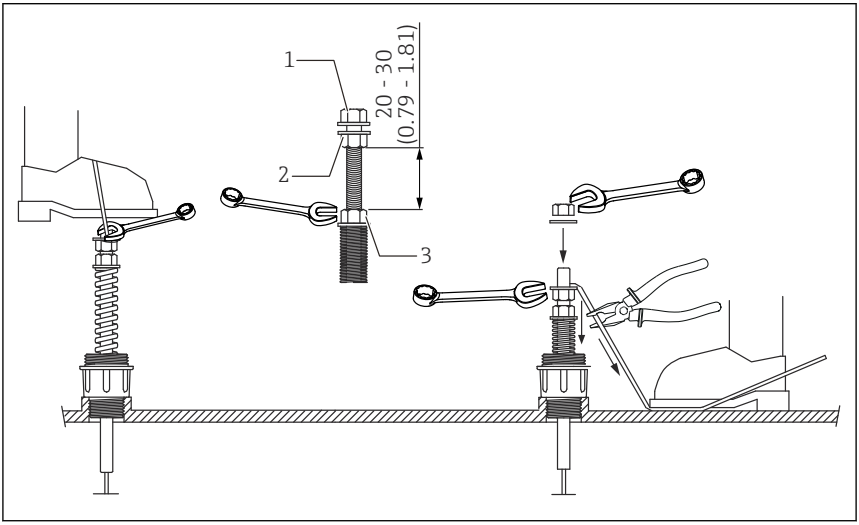

4 Guide wire installation 2. Unit of measurement mm (in)

1 Nut 1
2 Nut 2
3 Nut 3

This completes the guide wire installation process.

5.5 Measuring tape and measuring wire installation

- Never bend or damage the measuring tape.
- Ensure that the measuring tape does not become twisted inside the tank or while the pipes are being laid out.
- There are small holes at intervals of 20 mm (1 inch if using feet as a unit) along approximately half of the entire length of the measuring tape. Install the measuring tape so that the perforated side is wound by the gauge.
- During the process, ensure that the measuring tape and the measuring wire do not come off the sheave elbow roller, and inspect them once the process has been completed.
- If it is necessary to pass the measuring tape through a 135 ° sheave elbow, perform the installation after ensuring that the work area is safe as poor footing can be extremely dangerous.
- Since the joint between the float and the measuring tape cannot be repaired once actual liquid is injected, inspect the joint carefully when the connection process has been completed.

Installation procedure

1. Extend the measuring tape while folding it back and forth in your hand approximately every 1.5 m to ensure that the tape does not become twisted.
2. Open the sheave elbow's cover and the gauge head's cover.
3. Install the measuring tape while ensuring that it does not become twisted inside the guide pipe.

This completes the installation preparation.

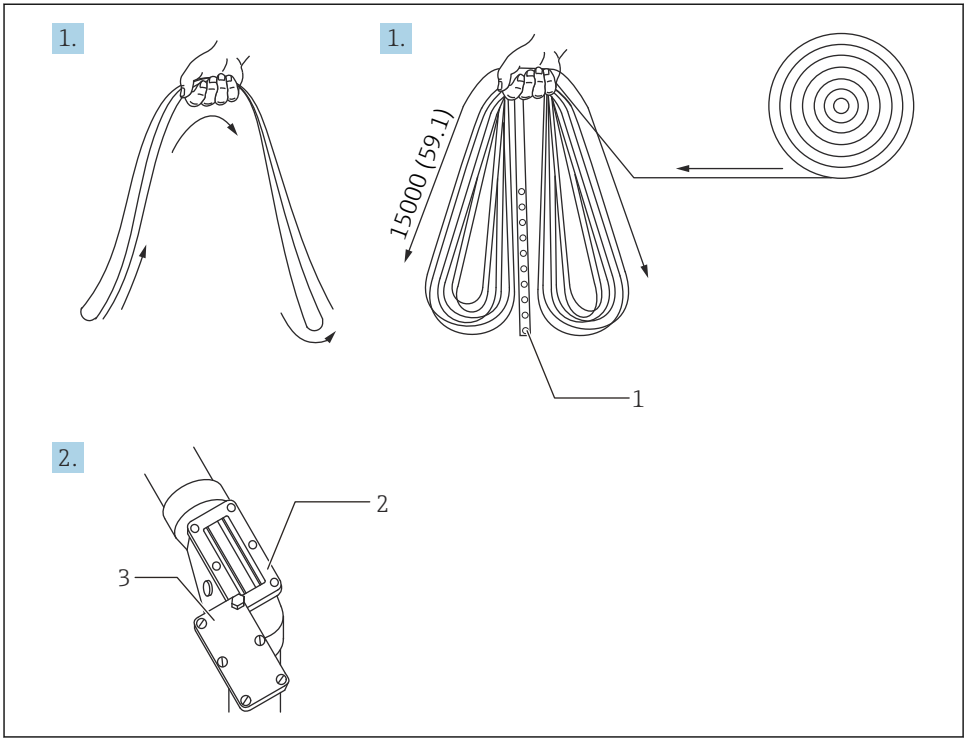

A0041208

5 Measuring tape preparation. Unit of measurement mm (in)

1 Perforation
2 Sheave elbow
3 Cover

5.5.1 Cone roof tank

Installation procedure

1. Feed one end of the measuring tape (non-perforated side) into the tank from the sheave elbow on the tank roof.
2. Pass the other end of the tape (perforated side with a looped end) through the sheave elbow on the gauge head to insert it in the gauge head.
3. Secure the end of the measuring tape to the tape drum. Wrap it around the tape drum twice, and then pull the measuring tape inside the tank.
4. Cut the measuring tape to the length of the float plus an excess of approximately 1.5 m.
5. Connect the measuring tape to the float.
   ↳ Refer to → 📄 23 for details on the connection procedure

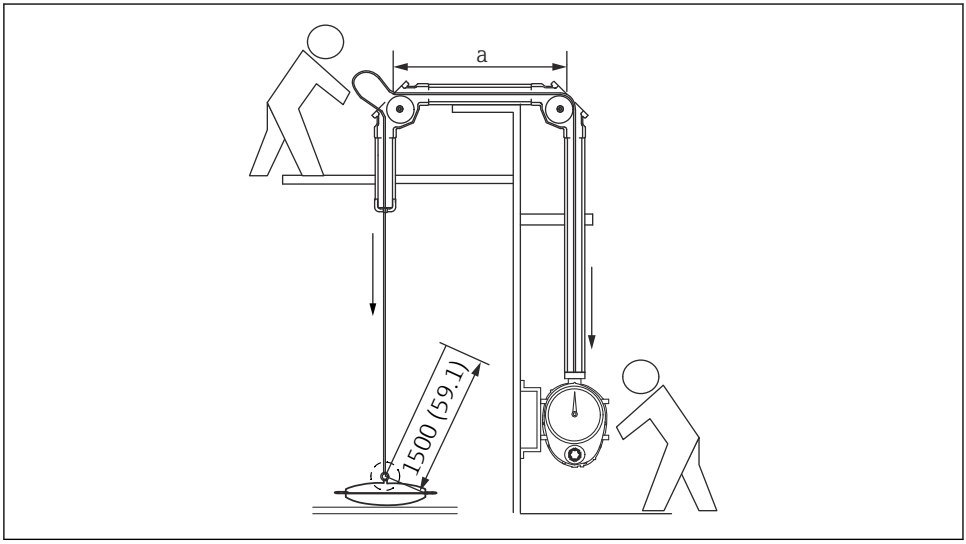

6 Measuring tape installation: Measuring tape. Unit of measurement mm (in)

a Guide pipe

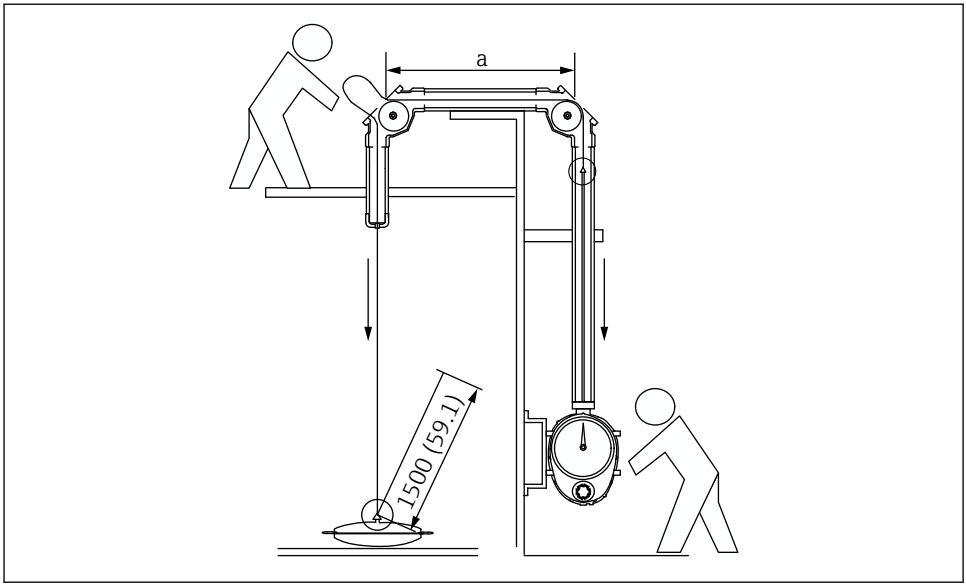

7 Measuring tape and measuring wire installation: measuring tape + measuring wire. Unit of measurement mm (in)

a Guide pipe

5.5.2 Measuring tape and float connection procedure

1. Bend the measuring tape at 65 mm (2.56 in).
2. Bend the measuring tape again at 65 mm (2.56 in).
3. Bend the twice-folded measuring tape at the center.
4. Pass the folded measuring tape through the joint shaft.
5. Secure the tape clamp in place by tightening the screw and nut.
6. Crush the screw's thread protruding from the nut side by pinching it with pliers to prevent it from becoming loose.

This completes the connection procedure.

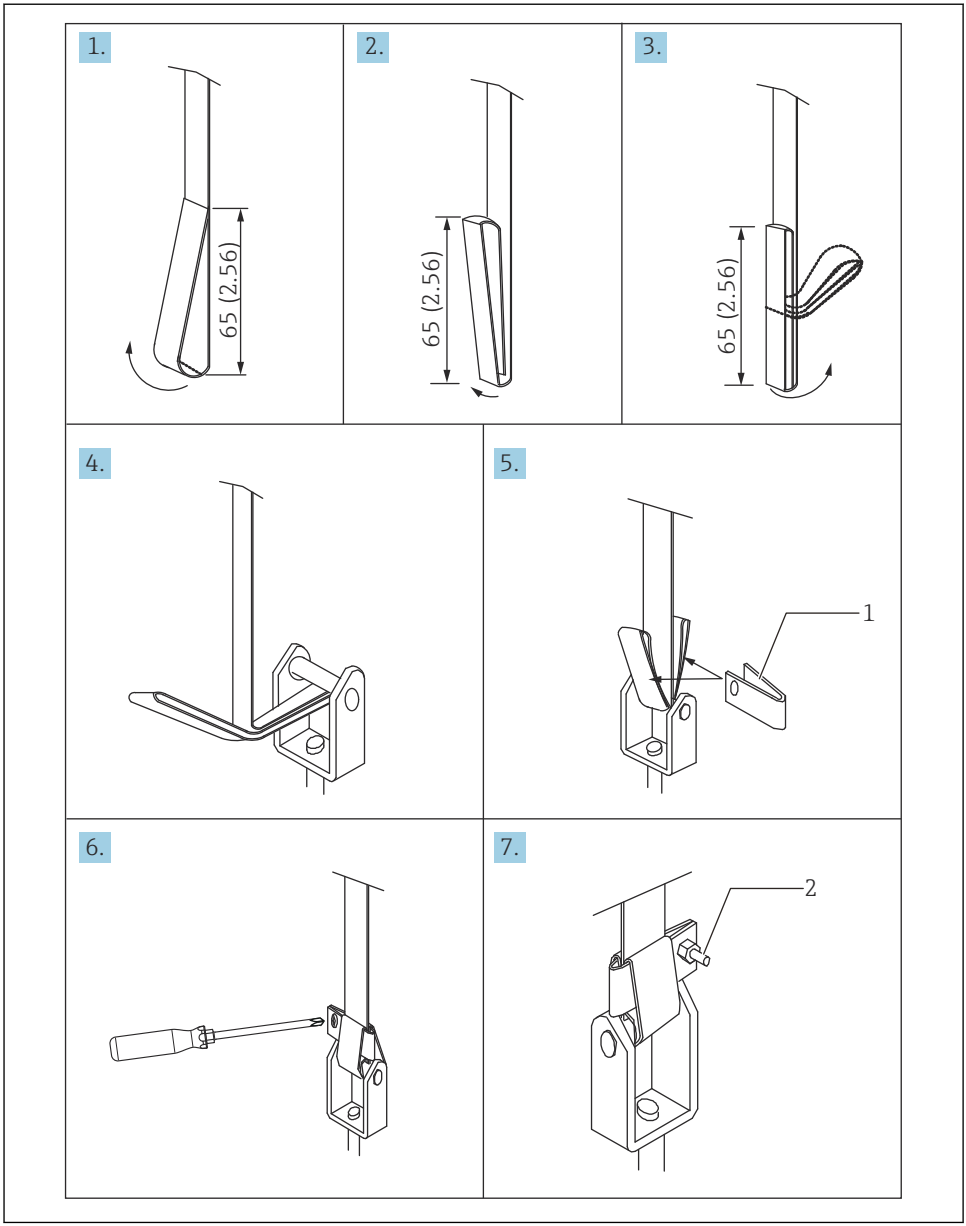

8 *Measuring tape and float connection. Unit of measurement mm (in)*

1 Measuring tape clamp
2 Screw thread

5.5.3 Floating roof tank

Installation procedure

1. Pass the measuring wire through the sheave elbow on the tank roof from the 90° sheave elbow on the gauge head, and feed one end of the measuring wire into the tank.
2. Temporarily secure the other end in place.
3. Connect the measuring wire to the float inside the tank.
4. Connect the measuring wire and the measuring tape again on the tank top, and feed the measuring tape to the gauge head side.
5. Check to ensure that the measuring tape is not twisted.
6. Close the sheave elbow's cover.

This completes the installation procedure.

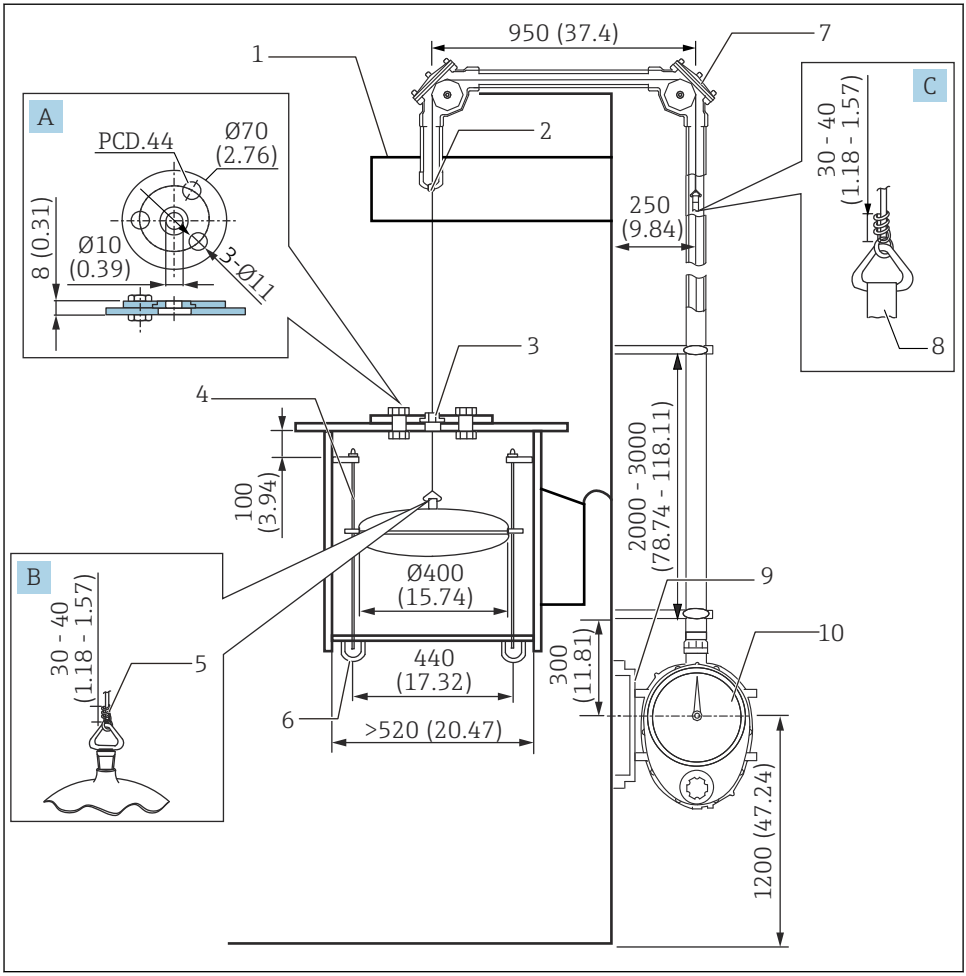

9 *Measuring tape installation. Unit of measurement mm (in)*

A Wire guide metal
B Top of the float
C Measuring wire hook
1 Roof stand
2 Wire guide socket
3 FRT wire guide metal
4 Guide bar: φ16 mm (0.63)
5 Stainless steel wire (accessory)
6 Pipe end: 1B Sch 40 to 80
7 90 ° sheave elbow

8 Measuring tape
9 Gauge supporter
10 Gauge head

5.5.4 Medium/high-pressure tank

- Never bend or damage the measuring tape.
- Ensure that the measuring tape does not become twisted inside the tank or while the pipes are being laid out.
- Approximately half of the measuring tape is perforated with small holes at 20 mm (1 in) intervals. Install the measuring tape so that the perforated side is wound by the gauge.
- During the process, ensure that the measuring tape and the measuring wire do not come off the sheave elbow roller, and inspect them once the process has been completed.
- If it is necessary to pass the measuring tape through a 135 ° sheave elbow, perform the installation after ensuring that the work area is safe as poor footing can be extremely dangerous.
- Since the joint between the float and the measuring tape cannot be repaired once actual liquid is injected, inspect the joint carefully when the connection process has been completed.

Installation procedure

1. Turn the gate valve's handle counterclockwise to open it completely, and remove the sheave elbow's cover and the gauge's rear cover.
   ↳ Using the provided gland fixing tool, remove the gland on the gauge head's rear cover.
   Remove the O-rings (two pcs).
2. Remove the tape guide and the lock screw.
3. Insert one end of the measuring tape (non-perforated side) into the tank from the sheave elbow on top of the tank.
4. Pass the other end of the tape (perforated, looped side) through the sheave elbow on the gauge's side and insert it into the gauge.
5. After passing the measuring tape that has been inserted into the gauge through the anti-dust slit, secure it to the tape drum using a tape securing screw, and then wrap it twice around the tape drum.
6. Loosen the mounting screws (two pcs) and adjust the position so that the measuring tape does not interfere with the anti-dust slit.
7. Pull the measuring tape inside the tank.
8. Cut the measuring tape to the length of the float plus an excess of approximately 1.5 mm (0.06 in).
9. Connect the measuring tape to the float.
   ↳ Refer to → 📄 23 for details on the connection procedure
10. Check to ensure that the measuring tape is not twisted.
11. Close the sheave elbow's cover.
12. Tighten the gland by following the diagram below.

This completes the installation procedure.

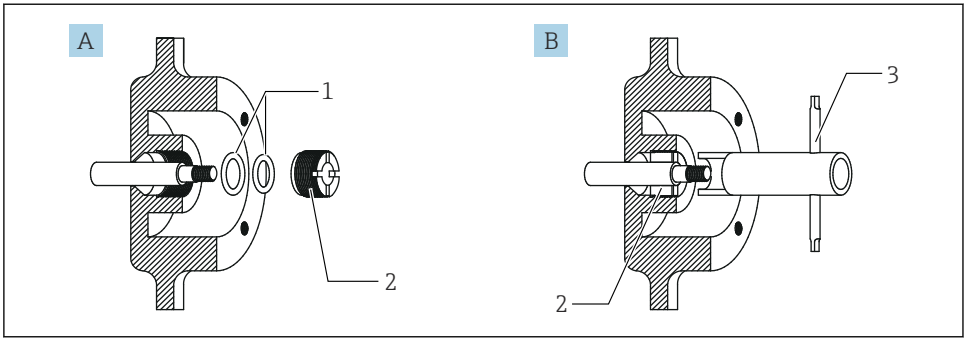

A0041212

10 Gland fixing tool

A Before tightening
B After tightening
1 O-ring
2 Gland
3 Gland fixing tool

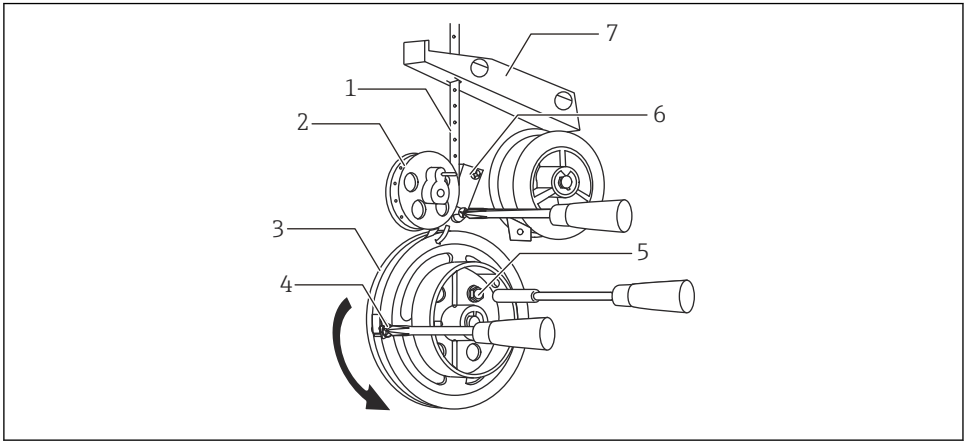

A0041213

11 LT components

1 Measuring tape
2 Sprocket
3 Tape drum
4 Tape-holding screw
5 Lock screw
6 Tape guide
7 Dust protector

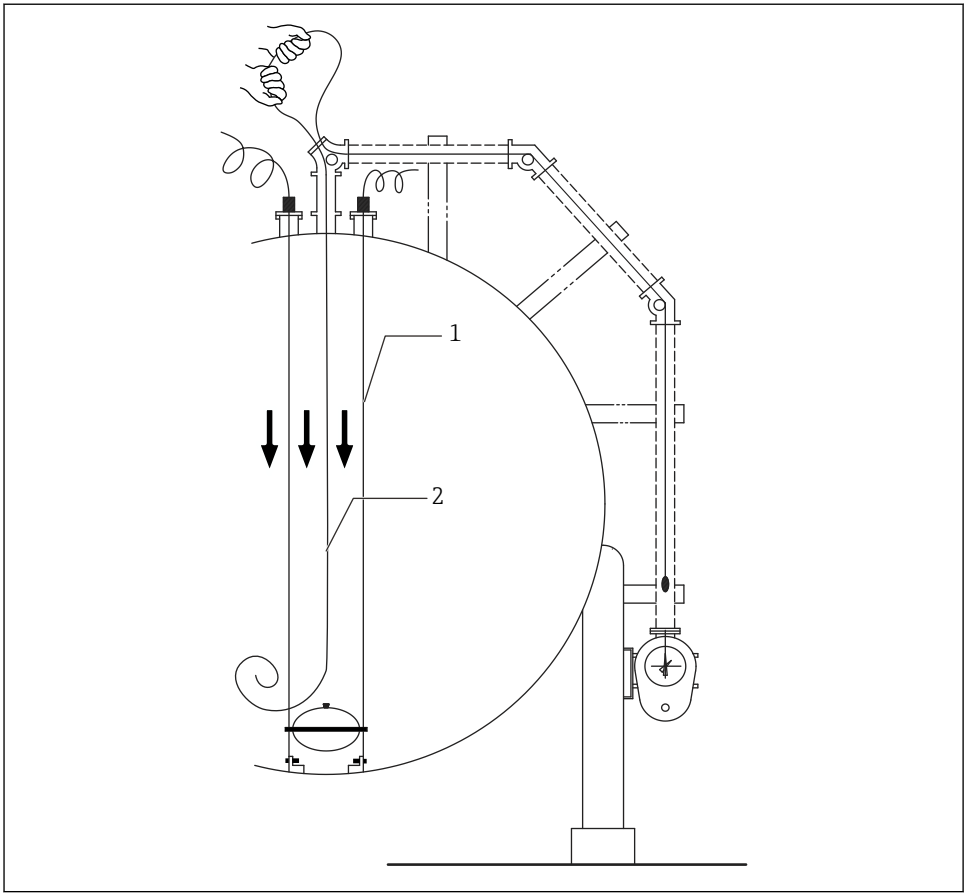

12 Measuring tape installation

1 Guide wire
2 Measuring tape

Cut the measuring tape after connecting it to the gauge head, leaving approximately 1.5 m (4.92 ft) from the connection to the float.

5.5.5 Internal adjustments

Tape guide adjustment procedure

1. Turn the tape drum inside the gauge head in the direction of the arrow in the diagram below to make the measuring tape taut.

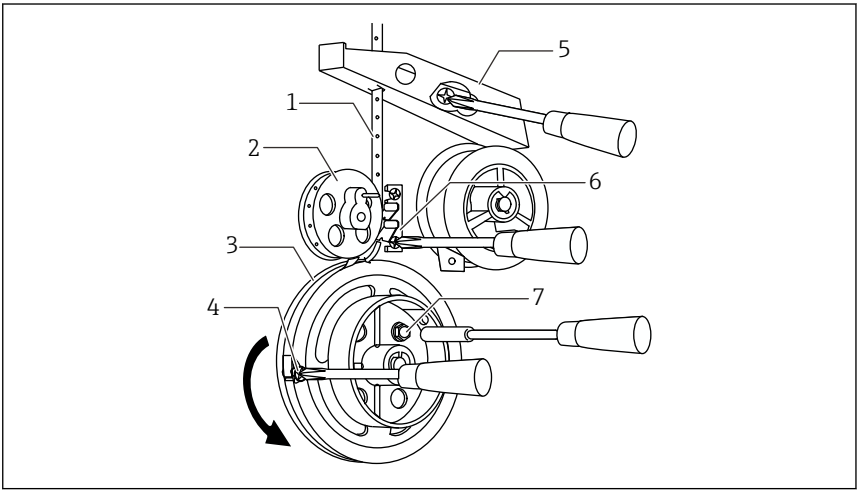

A0041215

13 Tape drum

1 Measuring tape
2 Sprocket
3 Tape drum
4 Tape-holding screw
5 Dust protector
6 Tape guide
7 Lock screw

2. Once taping is completed, set the tape so that both ends of the tape guide are positioned approximately 2 mm (0.08 in) from the measuring tape surface as shown in the diagram below.
   - The measuring tape may come off the sprocket pins due to sudden movement caused by waves of the liquid, which may affect the reading. The tape guide prevents this.
3. If a dust cover is installed, loosen the mounting screws (two pcs) and adjust the position so that the measuring tape does not interfere with the anti-dust slit.

This completes the adjustment procedure.

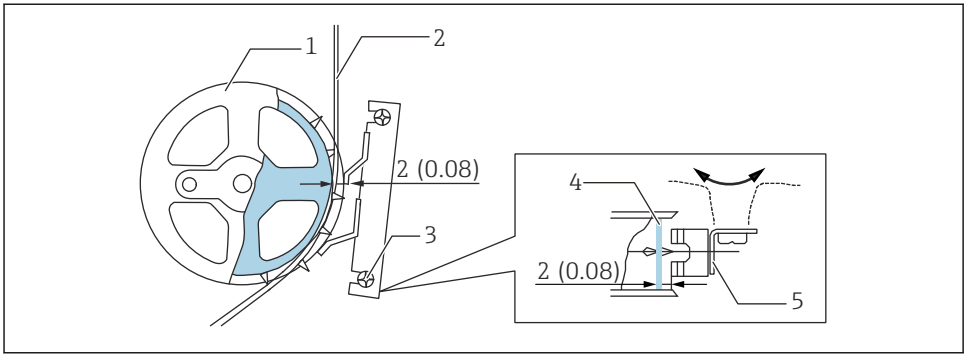

14 Tape guide adjustment. Unit of measurement mm (in)

1 Sprocket
2 Measuring tape
3 Mounting screw
4 Measuring tape
5 Tape guide

5.5.6 Conster installation

Installation procedure

Install the conster after the measuring tape has been installed.

- Install the conster after the measuring tape has been installed.
- Never remove your hand when winding the conster. The force from the spring may result in injury.
- Removing the conster from the large conster drum or applying excessive force to the conster will cause uneven torque generation, resulting in inaccurate readings. Handle with care.
- When winding the conster from the small conster drum to the large conster drum, keep a firm grip on the large conster drum until force has been transmitted to the measuring tape at the end

1. Ensure that the lock screw has been removed before securing the conster's end to the large conster drum with a screw and a nut.
2. Rotate the large conster drum in the direction indicated by the arrow.
3. When securing the conster drum in place, turn the tape drum counterclockwise to ensure that the tape is taut before securing it in place.
4. If the tank is empty, wrap the tape around the small conster drum twice and secure it to the tape drum with a lock screw.
   ↳ If the tank contains actual liquid, measure the surface level of the liquid and calculate the number of windings using the following equation. Wind the tape based on the calculation result using the large conster drum and secure it in place.
5. Close the gauge head cover.
6. For LT5-4/LT5-6, close the cover's gland.

This completes the conster's installation procedure.

$$\text{Number of turns} = \frac{\text{Tank height (measuring span) - Actual liquid level}}{\text{0.6 (unit: m)}}$$

A0041217-EN

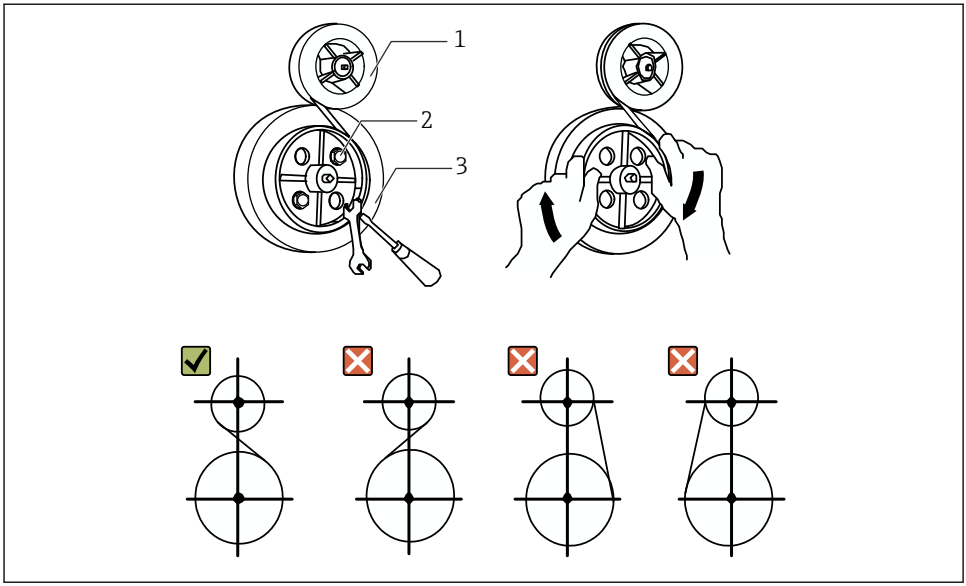

15 Conster installation

1 Small conster drum
2 Lock screw
3 Large conster drum

5.6 Liquid sealant for seal pot

5.6.1 Filling seal pot with liquid sealant (when installing a new gauge)

Liquid sealant filling procedure

1. Install the entire LT system, including the seal pot and float.
   ↳ Parts shown in the figure may be different depending on the selected order code.

2. Hoist the float up and down manually to confirm that the dial (or counter) display changes accordingly.

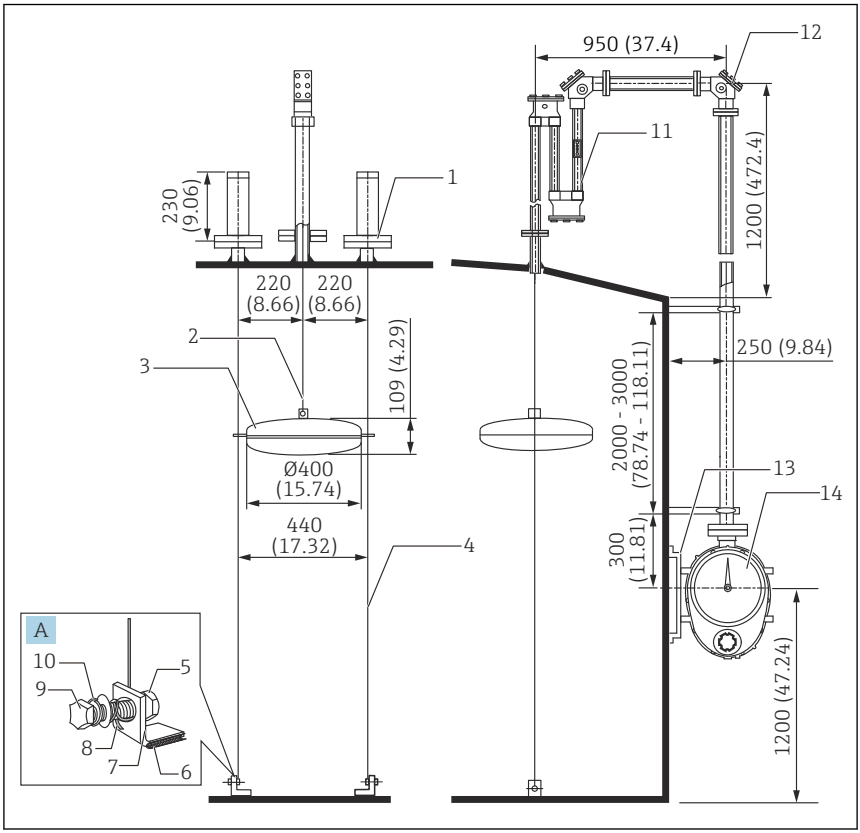

A0041198

16 *LT with a seal pot. Unit of measurement mm (in)*

A Anchor hook
1 Top anchor
2 Measuring tape
3 Float
4 Guide wire
5 Nut
6 Wetted part (welded to the tank)
7 Anchor hook
8 Guide wire
9 Bolt
10 Washer
11 Seal pot
12 90 ° sheave elbow
12 Gauge supporter
13 Gauge head

3. After checking the operation of LT, remove the cover of the 90° sheave elbow for the seal pot and inject the liquid sealant.
   ↳ Note that checking the operation of LT after filling it with liquid sealant may cause the liquid sealant to leak through the measuring tape.

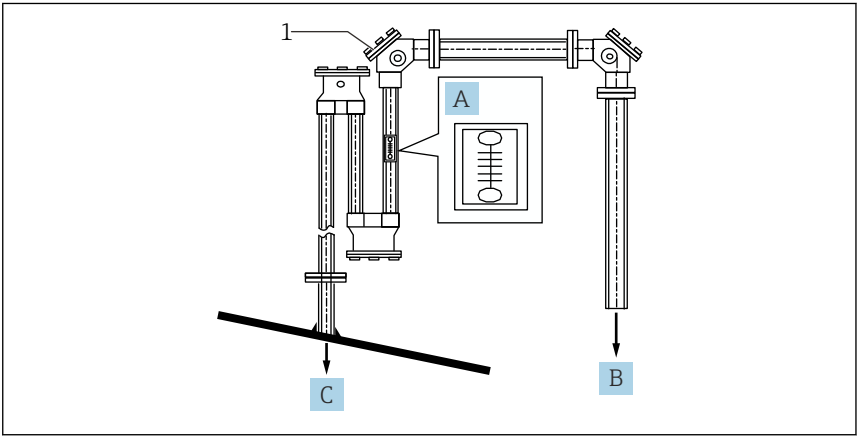

17 Filling with liquid sealant

A Scale for liquid sealant
B To the LT5 side
C To the tank
1 90 ° sheave elbow

4. Fill up to the middle of the scale for liquid sealant.
5. Close the 90 ° sheave elbow cover.

This completes the liquid sealant filling process.

Approximately 2 l (liters) of liquid sealant is included in the kit. This means that there will be a small amount of leftover once the seal pot has been filled with the prescribed amount. Do not discard this leftover sealant as it will be used after the tank is in operation when refill is required.

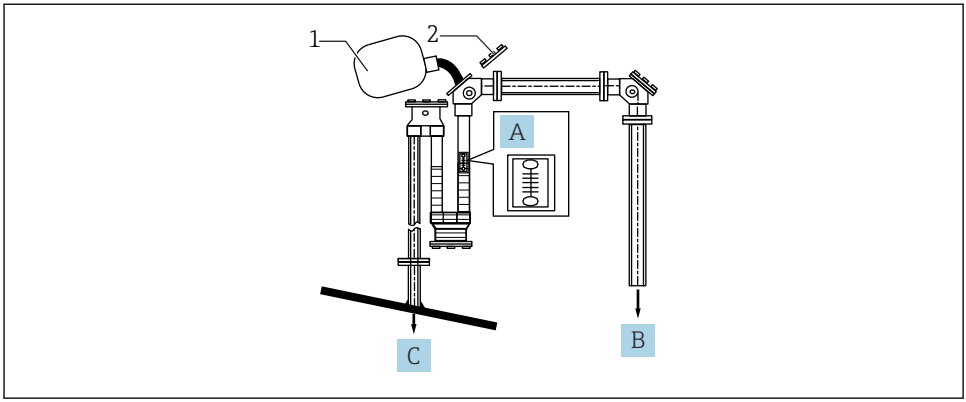

A0041220

18 Amount of liquid sealant

A Scale for liquid sealant
B To the LT5 side
C To the tank
1 Liquid sealant
2 90 ° sheave elbow cover

Operating the tank without filling it with liquid sealant will cause corrosion of the LT, the sheave elbow's packing and O-rings due to the gas components inside the tank, which will result in malfunction. Always fill with liquid sealant.

5.6.2 Filling seal pot with liquid sealant (for an installed gauge)

Liquid sealant filling procedure

NOTICE

Used liquid sealant may have become mixed with liquids in the tank, turning it into a hazardous substance.

▶ Never touch used liquid sealant with bare hands.

Carefully select the material for the container that would catch the liquid sealant.

1. Place a container that can hold at least 2 l (liters) under the drain
2. Check the surrounding area for safety, and then remove the seal pot's drain plug.
3. Drain the liquid sealant from the seal pot.
4. Open the 90 ° sheave elbow's cover.

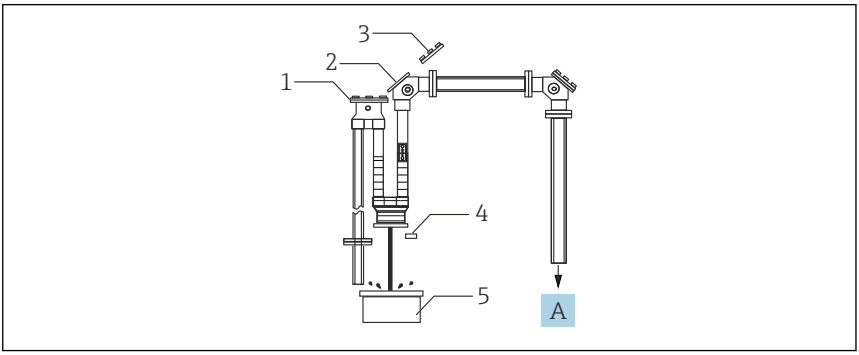

A0041230

19 Draining liquid sealant

A To the LT5 side
1 Sheave elbow
2 90 ° sheave elbow
3 90 ° sheave elbow cover
4 Drain plug
5 Container that can hold at least 2 l

5. Close the drain plug and inject liquid sealant until it reaches the middle of the scale on the side of the seal pot.
6. Close the sheave elbow's cover.

This completes the filling process of liquid sealant.

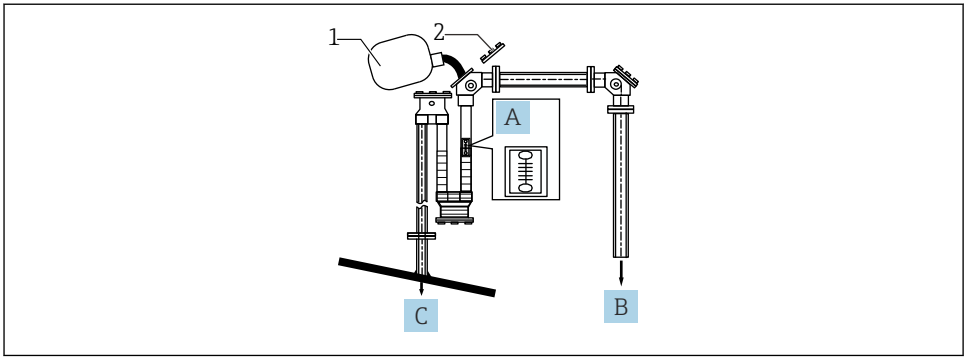

A0041220

20 Filling with liquid sealant

A Scale for liquid sealant
B To the LT5 side
C To the tank
1 Liquid sealant
2 90 ° sheave elbow cover

6 Commissioning

6.1 Dial display

Pointer setting and scale reading procedure

When calibrating (pointer setting) to the value that has been determined as the calculated value or measured value, the calibration procedure will vary depending on whether it is for a dial display or a counter display. Use a dial display when the tank height is no more than 20 m or 60 ft; for taller tanks, use a counter display.

1. Remove the indicator cover and loosen the cap nut.
   - ↳ Pull the short needle (yellow-green) forward while keeping the long needle (white) steady to free the short needle. Align the short needle with the inner scale (one scale notch: 1 mm (0.04 in)) so that it corresponds to the lower two digits of the liquid level.
2. Align the long needle with the outer scale.
   - ↳ Since one scale notch on the outer scale corresponds to 100 mm (3.94 in) of the liquid level, the outer scale is aligned visually based on the lower two digits of the liquid level.
3. After aligning the needles, tighten the cap nut firmly.
   - ↳ Use the long needle and the outer scale to read the 10 000 mm (393.7 in), 1 000 mm (39.37 in) and 100 mm (3.94 in) digits; use the short needle and the inner scale to read the 10 mm (0.34 in) and 1 mm (0.04 in) digits.
     Tightening torque: 0.315 N/m

This completes the indicator setting and scale reading process.

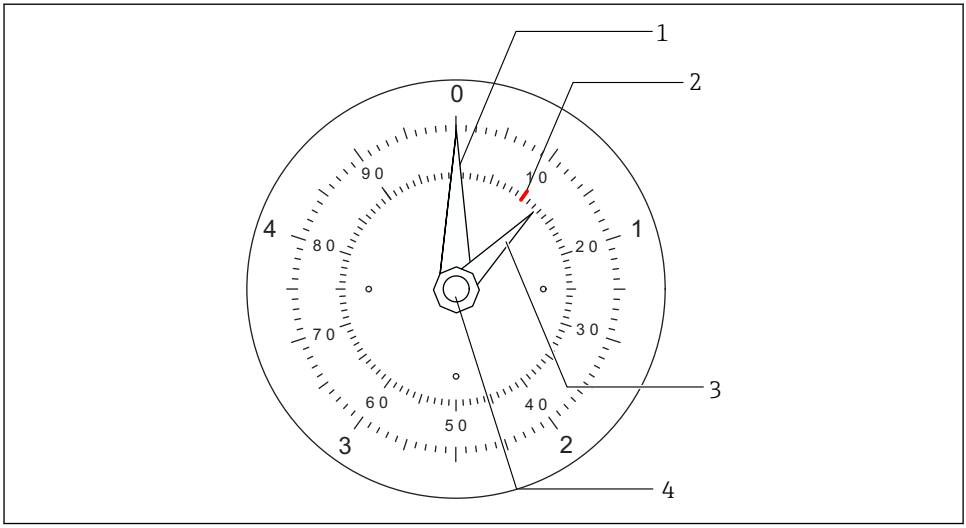

A0041231

21 Dial display (scale plate for 5 m (16.4 ft))

1 Long needle (white)
2 Example: 10 mm position
3 Short needle (green)
4 Cap nut

6.2 Counter display

Counter display procedure

- The scale plate (one scale notch: 1 mm (0.04 in)) can rotate freely.
- The counter drum changes one digit on the first drum for every notch (100 mm (3.94 in)) the scale plate moves.

1. Remove the indicator cover.
2. Loosen the thread at the center of the scale plate.
3. Turn the scale plate so that the value on the counter drum matches the upper three digits of the liquid level.
4. Align the scale plate so that the pointer corresponds to the lower two digits of the liquid level, and tighten the thread on the scale plate.
   ↳ If the needle is pointing anywhere between 97 and 03 on the scale plate, the value on the counter drum will not change instantly. It will change gradually while maintaining a constant relationship between the scale plate and the rotation, and the counter will display half values. In order to prevent incorrect reading, the counter window and parts of the scale plate are color coded.

This completes the display procedure.

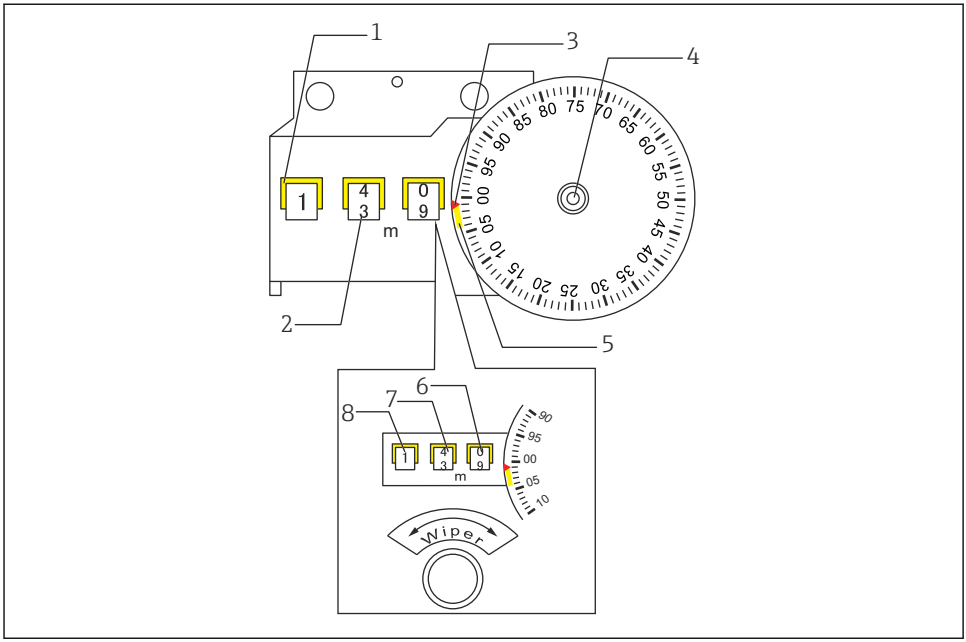

A0041232

22 Counter display

1 *Counter (yellow)*
2 *Counter (black)*
3 *Pointer (red)*
4 *Thread*
5 *Range (yellow)*
6 *No. 1 drum*
7 *No. 2 drum*
8 *No. 3 drum*

When the pointer (red) is pointing towards the yellow section, the counter will read the value on the yellow side, and when it is pointing towards the black section, it will read the value on the black side.

(Example)

- Yellow: 14 000 mm (551.18 in)
- Black: 13 999 mm (551.14 in)

6.3 Indicator calibration

The following three methods can be used to calibrate indicators on level gauges, but a universal procedure applies to the operation of the indicators.

- Fill the tank with actual liquid and calibrate the indicator based on the measured volume
- With the tank empty, calibrate the indicator using formulaic calculations
- Fill the tank with water and calibrate the indicator based on the measured value

6.3.1 Procedure for calibrating the indicator using actual liquid

In order to obtain reliable data, measure the liquid level two to three times using a measuring tape that has been officially certified to meet the tolerance as tested by a public institution ±0.3 mm (0.01 in) (however, ±1.2 mm (0.05 in)/10 m (32.81 ft)), and then calibrate the indicator based on the obtained data.

6.3.2 Procedure for calibrating the indicator when the tank is empty

- Determine Lf from the equation below when the tank is empty and set the indicator to that value.
- When liquid level Lf is reached, the float will begin to gain buoyancy, the gauge will begin to run, and it will continue to indicate the accurate liquid level (see graphs 1 and 2).

1.	**Float draft when the tank is empty**				
$Lf = \frac{h}{2} + \frac{\frac{W - T}{\rho} - \frac{V}{2}}{S} = 80.11\ mm$					
Float diameter	D	400 mm (15.75 in)	Float height	h	200 mm (7.87 in)
Float mass	W	3 300 g (18.3 lb)	Float volume	V	19 200 cm^3
Waterline cross section	S	1 256.64 cm^2	Tape tension	T	1 200 g (2.65 lb)
Density of the measured liquid	ρ	1 g (0.002 lb)/cm^3			

Lf can be calculated by substituting density into the above equation.

If a float is being installed to a spherical tank away from the tank's center line, add Lx, which can be determined from the below equation, to Lf in 2 above.

$Lx = \frac{D}{2} - \sqrt{\frac{D^2}{4} - S^2}$	Lx	Correction amount for level indication for deviation caused by float installation
	D	Diameter of a spherical tank, etc.
	S	Deviation distance from the center of the tank to the center of the float (mm)

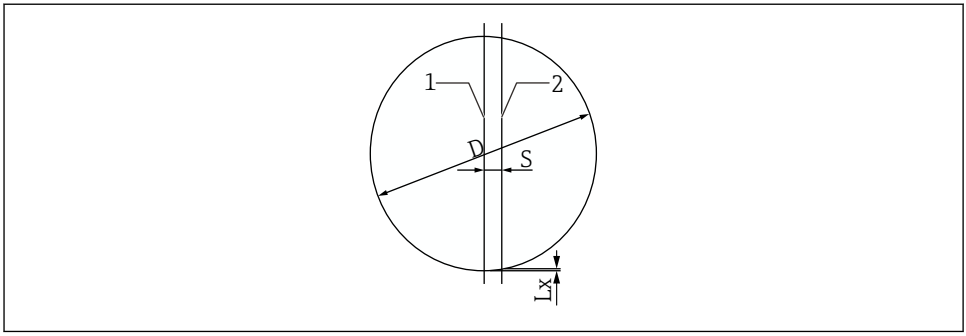

A0041235

23 Indicator calibration on a spherical tank

1 Center of the tank
2 Center of float installation

6.3.3 Procedure for calibrating the indicator when the tank is filled with water

A water leakage test is generally performed when a tank is complete, but taking measurements after the tank has been filled with actual liquid is challenging. For this reason, the indicator is calibrated while the tank is filled with water and then it is readjusted when it is filled with actual liquid. In this case, the following equation is used to determine the difference in the initial floating position of the float when the tank is filled with water and actual liquid in order to correct the value that is indicated when the tank is filled with water.

After setting the LT indicator to the measured value in water, determine L_B using the equation below. If L_B is a positive value, it is added to the determined indicator value, and if it is a negative value, it is subtracted from the determined indicator value to determine the final indicator value.

Equation: For the φ400 mm (15.75 in) float of LT5-1 5 000 g (11.02 lb)

1.	**Float draft when the tank is empty**				
$Lf = \frac{h}{2} + \frac{\frac{W - T}{\rho} - \frac{V}{2}}{S}$ = 42.88 mm					
Float diameter	D	400 mm (15.75 in)	Float height	h	109 mm (4.29 in)
Float mass	W	5 000 g (11.02 lb)	Float volume	V	10 520 cm^3
Waterline cross section	S	1 256.64 cm^2	Tape tension	T	1 200 g (2.65 lb)
Density of the measured liquid	ρ	1 g (0.002 lb)/cm^3 (assuming "empty = water")			

2.	**Correction of indicated value with simulated actual liquid**				
Lb = Lf (water) - Lf (actual liquid) = 56.50 mm					
Float diameter	D	400 mm (15.75 in)	Float height	h	109 mm (4.29 in)
Float mass	W	5 000 g (11.02 lb)	Float volume	V	10 520 cm^3
Waterline cross section	S	1 256.64 cm^2	Tape tension	T	1 200 g (2.65 lb)
Density of the measured liquid	ρ	0.8 g (0.001 lb)/cm^3 (actual liquid)			

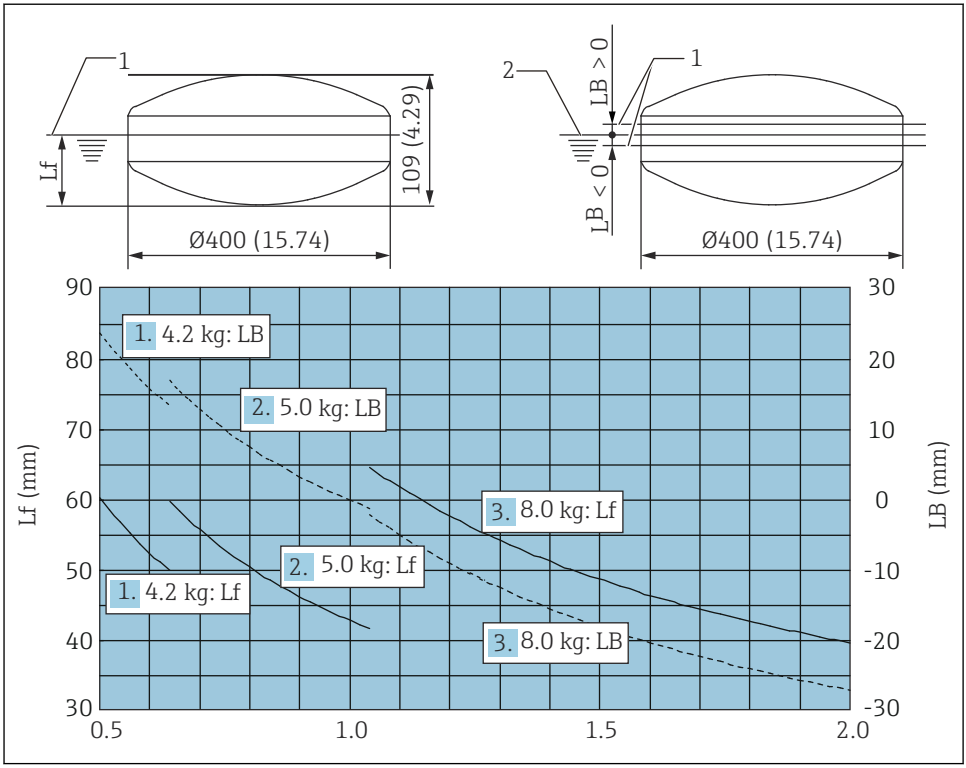

24 *Graph of LT5-1 φ400 mm (15.75 in) float: Density of the measured liquid ρ (g/cm3). Measurement unit: mm (in)*

1 *Draft surface at density ρ*
2 *Water (draft surface when the density is 1.0 g (0.002 lb)/cm³)*

Equation: For the φ140 mm (5.51 in) float of LT5-1 2 100 g (4.63 lb)

Change the values used in the equation according to the float.

1.	**Float draft when the tank is empty**

$$Lf = \frac{h}{2} + \frac{\frac{W - T}{\rho} - \frac{V}{2}}{S} = 72.03\text{mm}$$

A0041239

Float diameter	D	140 mm (5.51 in)	Float height	h	200 mm (7.87 in)
Float mass	W	2 100 g (4.63 lb)	Float volume	V	2 661.2 cm³

1.	**Float draft when the tank is empty**				
Waterline cross section	S	153.94 cm^2	Tape tension	T	1 200 g (2.65 lb)
Density of the measured liquid	ρ	1 g (0.002 lb)/cm^3 (assuming "empty = water")			

2.	**Correction of indicated value with simulated actual liquid**				
Lb = Lf (water) - Lf (actual liquid) = 14.61 mm					
Float diameter	D	400 mm (15.75 in)	Float height	h	109 mm (4.29 in)
Float mass	W	5 000 g (11.02 lb)	Float volume	V	10 520 cm^3
Waterline cross section	S	1 256.64 cm^2	Tape tension	T	1 200 g (2.65 lb)
Density of the measured liquid	ρ	0.8 g (0.001 lb)/cm^3 (actual liquid)			

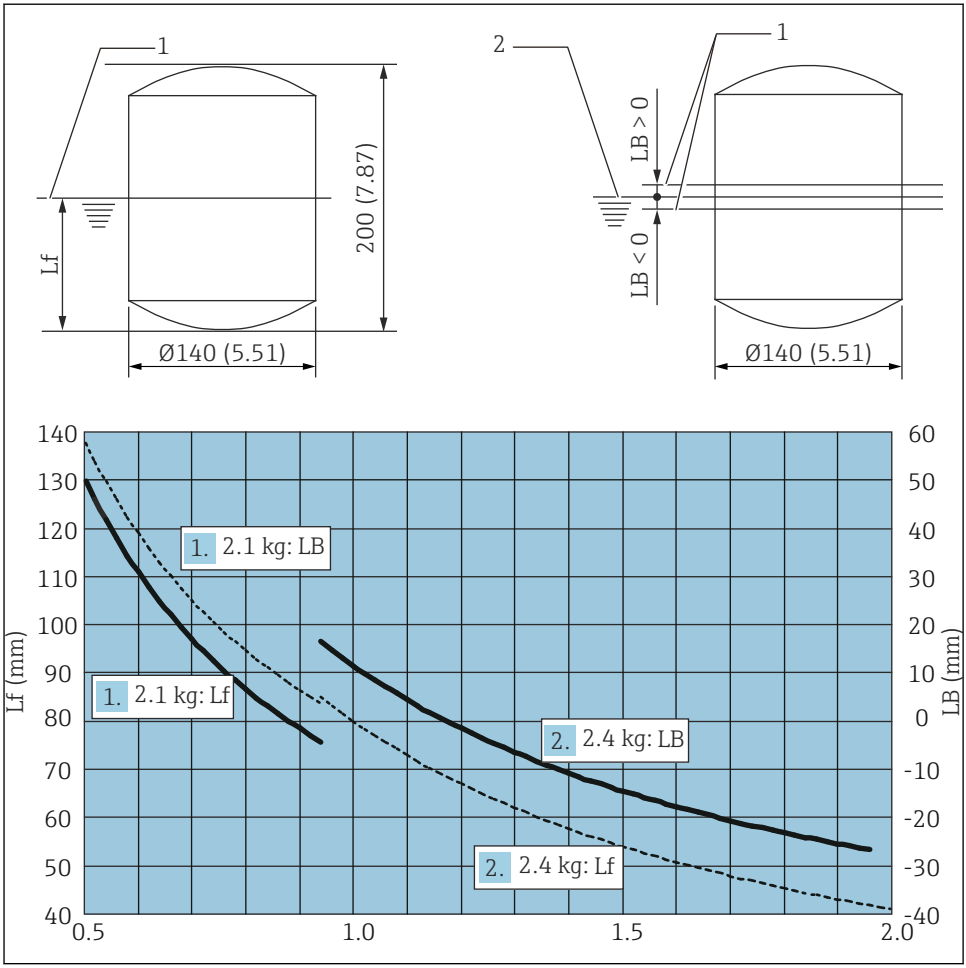

25 Indicator value when the tank is filled with water. Measurement unit: mm (in)

1 Draft surface at density ρ
2 Water (draft surface when the density is 1.0 g (0.002 lb)/cm³)

Equation: For the φ400 mm (15.75 in) float of LT5-4/LT5-6 8 300 g (18.30 lb)

1.	Float draft when the tank is empty				
$Lf = \frac{h}{2} + \frac{\frac{W - T}{\rho} - \frac{V}{2}}{S}$ = 80.11mm					
Float diameter	D	400 mm (15.75 in)	Float height	h	200 mm (7.87 in)
Float mass	W	8 300 g (18.30 lb)	Float volume	V	19 200 cm^3
Waterline cross section	S	1 256.64 cm^2	Tape tension	T	1 200 g (2.65 lb)
Density of the measured liquid	ρ	1 g (0.002 lb)/cm^3 (assuming "empty = water")			

2.	Correction of indicated value with simulated actual liquid				
Lb = Lf (water) - Lf (actual liquid) = 56.50 mm					
Float diameter	D	400 mm (15.75 in)	Float height	h	200 mm (7.87 in)
Float mass	W	8 300 g (18.30 lb)	Float volume	V	19 200 cm^3
Waterline cross section	S	1 256.64 cm^2	Tape tension	T	1 200 g (2.65 lb)
Density of the measured liquid	ρ	0.5 g (0.001 lb)/cm^3 (actual liquid)			

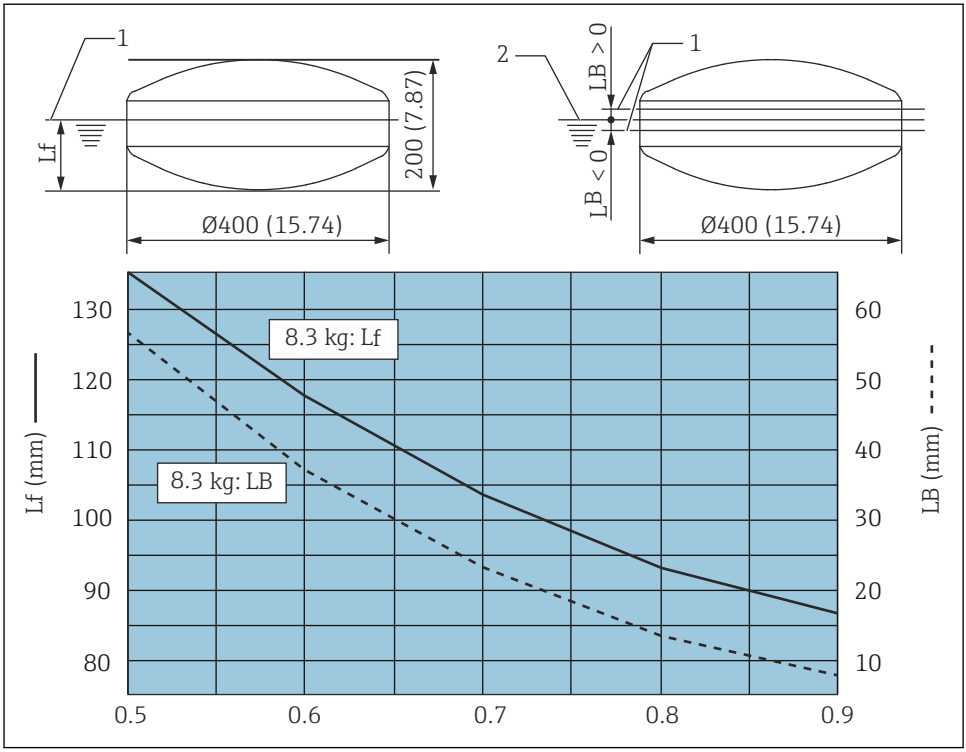

26 Graph of LT5-4/LT5-6 φ400 mm (15.75 in) float: Density of the measured liquid ρ (g/cm³). Measurement unit: mm (in)

1 Draft surface at density ρ
2 Water (draft surface when the density is 1.0 g (0.002 lb)/cm³)

6.4 Handling the gauge in water leak/airtightness tests and at gauge startup

When accidents such as damage to a measuring tape occur in a high-pressure tank such as a liquefied gas tank, not only do they have a grave impact on the operation of the tank, but repair work can also be very costly. It has been our experience that most issues involving damaged measuring tapes arise during the testing phase or in the initial operation of the tank. To prevent such incidents, be sure to complete the following procedures. By taking these steps, accidents in the early stage of operation can be avoided.

- For high-pressure tanks, always open the gate valve when performing a water leak test on the tank and set the LT to measurement mode. Failure to do so may result in damaged measuring tape.
  If you notice that the gate valve has not been opened after you started to fill the tank with water, either drain the water or open the sheave elbow cover and open the gate valve while applying a brake to the measuring tape with your hand, and allow the LT to gradually wind the measuring tape.
- When performing a water leak test, partially open the water-feed valve and slowly fill the tank with water until a depth of approx. 500 to 1 000 mm (19.69 to 39.37 in) is reached.
- Filling with a large amount of water may damage the measuring tape. If the float is near the water inlet, install a wave guard to protect the float from being directly affected by the water surface.
- When performing an airtightness test on LT with the gate valve open, check the following LT parts in advance to ensure that they have been tightened. Failure to tighten the following parts will cause a massive release of air that will generate ultra high-speed air flow near the gate valve, causing the measuring tape to become damaged from vibration.
  - Drain plug on the bottom of the LT main body
  - Rear cover bolts
  - Gland of the gauge head rear cover
  - Elbow covers
- When opening the LT rear cover after an airtightness test, check to make sure that the tank's internal pressure is atmospheric pressure or that the gate valve is closed before opening the LT.
  Never open the LT or a sheave elbow cover in an attempt to quickly release the compressed air from the airtightness test. This will damage the measuring tape.
- Always open the gate valve when injecting actual liquid such as liquefied gas into a tank. The gate valve should only be closed in case of an emergency or when the liquid level is steady.

71629416

www.addresses.endress.com

Endress+Hauser

People for Process Automation