BA02106D/06/EN/01.22-00
71598577
2024-01-10

Valid as of version
01.00.zz (Device firmware)

Operating Instructions
Proline Promag H 300

Electromagnetic flowmeter
PROFINET with Ethernet-APL

ethernet-apl™
advanced physical layer

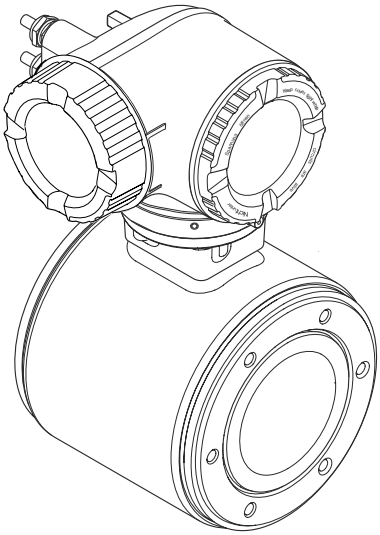

Endress+Hauser
People for Process Automation

- Make sure the document is stored in a safe place such that it is always available when working on or with the device.
- To avoid danger to individuals or the facility, read the "Basic safety instructions" section carefully, as well as all other safety instructions in the document that are specific to working procedures.
- The manufacturer reserves the right to modify technical data without prior notice. Your Endress+Hauser Sales Center will supply you with current information and updates to these instructions.

Table of contents

1 About this document

1.1 Document function

These Operating Instructions contain all the information required in the various life cycle phases of the device: from product identification, incoming acceptance and storage, to installation, connection, operation and commissioning, through to troubleshooting, maintenance and disposal.

1.2 Symbols

1.2.1 Safety symbols

⚠ DANGER
This symbol alerts you to a dangerous situation. Failure to avoid this situation will result in serious or fatal injury.

⚠ WARNING
This symbol alerts you to a dangerous situation. Failure to avoid this situation can result in serious or fatal injury.

⚠ CAUTION
This symbol alerts you to a dangerous situation. Failure to avoid this situation can result in minor or medium injury.

NOTICE
This symbol contains information on procedures and other facts which do not result in personal injury.

1.2.2 Electrical symbols

Symbol	Meaning
⎓	Direct current
∼	Alternating current
≂	Direct current and alternating current
⏚	**Ground connection** A grounded terminal which, as far as the operator is concerned, is grounded via a grounding system.
⏚	**Potential equalization connection (PE: protective earth)** Ground terminals that must be connected to ground prior to establishing any other connections. The ground terminals are located on the interior and exterior of the device: ▪ Interior ground terminal: potential equalization is connected to the supply network. ▪ Exterior ground terminal: device is connected to the plant grounding system.

1.2.3 Communication-specific symbols

Symbol	Meaning
📶	**Wireless Local Area Network (WLAN)** Communication via a wireless, local network.
●	**LED** Light emitting diode is off.

Symbol	Meaning
	LED Light emitting diode is on.
	LED Light emitting diode is flashing.

1.2.4 Tool symbols

Symbol	Meaning
	Flat-blade screwdriver
	Allen key
	Open-ended wrench

1.2.5 Symbols for certain types of information

Symbol	Meaning
	Permitted Procedures, processes or actions that are permitted.
	Preferred Procedures, processes or actions that are preferred.
	Forbidden Procedures, processes or actions that are forbidden.
	Tip Indicates additional information.
	Reference to documentation
	Reference to page
	Reference to graphic
▶	Notice or individual step to be observed
1., 2., 3....	Series of steps
	Result of a step
	Help in the event of a problem
	Visual inspection

1.2.6 Symbols in graphics

Symbol	Meaning
1, 2, 3, ...	Item numbers
1., 2., 3., ...	Series of steps
A, B, C, ...	Views
A-A, B-B, C-C, ...	Sections
EX	Hazardous area

Symbol	Meaning
	Safe area (non-hazardous area)
	Flow direction

1.3 Documentation

For an overview of the scope of the associated Technical Documentation, refer to the following:
- *Device Viewer* (www.endress.com/deviceviewer): Enter the serial number from the nameplate
- *Endress+Hauser Operations app*: Enter serial number from nameplate or scan matrix code on nameplate.

1.3.1 Document function

The following documentation may be available depending on the version ordered:

Document type	Purpose and content of the document
Technical Information (TI)	**Planning aid for your device** The document contains all the technical data on the device and provides an overview of the accessories and other products that can be ordered for the device.
Brief Operating Instructions (KA)	**Guide that takes you quickly to the 1st measured value** The Brief Operating Instructions contain all the essential information from incoming acceptance to initial commissioning.
Operating Instructions (BA)	**Your reference document** The Operating Instructions contain all the information that is required in the various phases of the life cycle of the device: from product identification, incoming acceptance and storage, to mounting, connection, operation and commissioning through to troubleshooting, maintenance and disposal.
Description of Device Parameters (GP)	**Reference for your parameters** The document provides a detailed explanation of each individual parameter. The description is aimed at those who work with the device over the entire life cycle and perform specific configurations.
Safety Instructions (XA)	Depending on the approval, safety instructions for electrical equipment in hazardous areas are also supplied with the device. The Safety Instructions are an integral part of the Operating Instructions. Information on the Safety Instructions (XA) relevant to the device is provided on the nameplate.
Supplementary device-dependent documentation (SD/FY)	Always comply strictly with the instructions in the relevant supplementary documentation. The supplementary documentation is an integral part of the device documentation.

1.4 Registered trademarks

Ethernet-APL™
Registered trademark of the PROFIBUS Nutzerorganisation e.V. (PROFIBUS User Organization), Karlsruhe, Germany

TRI-CLAMP®
Registered trademark of Ladish & Co., Inc., Kenosha, USA

2 Safety instructions

2.1 Requirements for the personnel

The personnel for installation, commissioning, diagnostics and maintenance must fulfill the following requirements:
- Trained, qualified specialists must have a relevant qualification for this specific function and task.
- Are authorized by the plant owner/operator.
- Are familiar with federal/national regulations.
- Before starting work, read and understand the instructions in the manual and supplementary documentation as well as the certificates (depending on the application).
- Follow instructions and comply with basic conditions.

The operating personnel must fulfill the following requirements:
- Are instructed and authorized according to the requirements of the task by the facility's owner-operator.
- Follow the instructions in this manual.

2.2 Intended use

Application and media
The measuring device described in this manual is intended only for the flow measurement of liquids with a minimum conductivity of 5 µS/cm.

Depending on the version ordered, the measuring device can also measure potentially explosive, flammable, poisonous and oxidizing media.

Measuring devices for use in hazardous areas, in hygienic applications or where there is an increased risk due to process pressure, are labeled accordingly on the nameplate.

To ensure that the measuring device remains in proper condition for the operation time:
- Keep within the specified pressure and temperature range.
- Only use the measuring device in full compliance with the data on the nameplate and the general conditions listed in the Operating Instructions and supplementary documentation.
- Based on the nameplate, check whether the ordered device is permitted for the intended use in the hazardous area (e.g. explosion protection, pressure vessel safety).
- Use the measuring device only for media to which the process-wetted materials are sufficiently resistant.
- If the ambient temperature of the measuring device is outside the atmospheric temperature, it is absolutely essential to comply with the relevant basic conditions as specified in the device documentation → 📄 8.
- Protect the measuring device permanently against corrosion from environmental influences.

Incorrect use
Non-designated use can compromise safety. The manufacturer is not liable for damage caused by improper or non-intended use.

⚠ WARNING
Danger of breakage due to corrosive or abrasive fluids and ambient conditions!
- Verify the compatibility of the process fluid with the sensor material.
- Ensure the resistance of all fluid-wetted materials in the process.
- Keep within the specified pressure and temperature range.

NOTICE

Verification for borderline cases:

- For special fluids and fluids for cleaning, Endress+Hauser is glad to provide assistance in verifying the corrosion resistance of fluid-wetted materials, but does not accept any warranty or liability as minute changes in the temperature, concentration or level of contamination in the process can alter the corrosion resistance properties.

Residual risks

⚠ CAUTION

The electronics and the medium may cause the surfaces to heat up or freeze. Risk of burns or frostbite!

- Mount suitable touch protection.

2.3 Workplace safety

When working on and with the device:

- Wear the required personal protective equipment as per national regulations.

2.4 Operational safety

Damage to the device!

- Operate the device in proper technical condition and fail-safe condition only.
- The operator is responsible for the interference-free operation of the device.

Modifications to the device

Unauthorized modifications to the device are not permitted and can lead to unforeseeable dangers!

- If modifications are nevertheless required, consult with the manufacturer.

Repair

To ensure continued operational safety and reliability:

- Carry out repairs on the device only if they are expressly permitted.
- Observe federal/national regulations pertaining to the repair of an electrical device.
- Use only original spare parts and accessories.

2.5 Product safety

This measuring device is designed in accordance with good engineering practice to meet state-of-the-art safety requirements, has been tested, and left the factory in a condition in which it is safe to operate.

It meets general safety standards and legal requirements. It also complies with the EU directives listed in the device-specific EU Declaration of Conformity. The manufacturer confirms this by affixing the CE mark to the device..

2.6 IT security

Our warranty is valid only if the product is installed and used as described in the Operating Instructions. The product is equipped with security mechanisms to protect it against any inadvertent changes to the settings.

IT security measures, which provide additional protection for the product and associated data transfer, must be implemented by the operators themselves in line with their security standards.

2.7 Device-specific IT security

The device offers a range of specific functions to support protective measures on the operator's side. These functions can be configured by the user and guarantee greater in-operation safety if used correctly. The following list provides an overview of the most important functions:

Function/interface	Factory setting	Recommendation
Write protection via hardware write protection switch → 🗎 11	Not enabled	On an individual basis following risk assessment
Access code (also applies for Web server login or FieldCare connection) → 🗎 11	Not enabled (0000)	Assign a customized access code during commissioning
WLAN (order option in display module)	Enabled	On an individual basis following risk assessment
WLAN security mode	Enabled (WPA2-PSK)	Do not change
WLAN passphrase (password) → 🗎 12	Serial number	Assign a customized WLAN passphrase during commissioning
WLAN mode	Access point	On an individual basis following risk assessment
Web server → 🗎 12	Enabled	On an individual basis following risk assessment
CDI-RJ45 service interface → 🗎 12	–	On an individual basis following risk assessment

2.7.1 Protecting access via hardware write protection

Write access to the parameters of the device via the local display, web browser or operating tool (e.g. FieldCare, DeviceCare) can be disabled via a write protection switch (DIP switch on the main electronics module). When hardware write protection is enabled, only read access to the parameters is possible.

Hardware write protection is disabled when the device is delivered → 🗎 126.

2.7.2 Protecting access via a password

Different passwords are available to protect write access to the device parameters or access to the device via the WLAN interface.

- User-specific access code
  Protect write access to the device parameters via the local display, Web browser or operating tool (e.g. FieldCare, DeviceCare). Access authorization is clearly regulated through the use of a user-specific access code.
- WLAN passphrase
  The network key protects a connection between an operating unit (e.g. notebook or tablet) and the device via the WLAN interface which can be ordered as an option.
- Infrastructure mode
  When the device is operated in infrastructure mode, the WLAN passphrase corresponds to the WLAN passphrase configured on the operator side.

User-specific access code

Write access to the device parameters via the local display, web browser or operating tool (e.g. FieldCare, DeviceCare) can be protected by the modifiable, user-specific access code (→ 🗎 124).

When the device is delivered, the device does not have an access code and is equivalent to *0000* (open).

WLAN passphrase: Operation as WLAN access point

A connection between an operating unit (e.g. notebook or tablet) and the device via the WLAN interface (→ 📄 67), which can be ordered as an optional extra, is protected by the network key. The WLAN authentication of the network key complies with the IEEE 802.11 standard.

When the device is delivered, the network key is pre-defined depending on the device. It can be changed via the **WLAN settings** submenu in the **WLAN passphrase** parameter (→ 📄 116).

Infrastructure mode

A connection between the device and WLAN access point is protected by means of an SSID and passphrase on the system side. Please contact the relevant system administrator for access.

General notes on the use of passwords

- The access code and network key supplied with the device should be changed during commissioning.
- Follow the general rules for generating a secure password when defining and managing the access code or network key.
- The user is responsible for the management and careful handling of the access code and network key.
- For information on configuring the access code or on what to do if you lose the password, for example, see the "Write protection via access code" section → 📄 124

2.7.3 Access via Web server

The device can be operated and configured via a Web browser with the integrated Web server. The connection is via the service interface (CDI-RJ45), signal transmission connection for PROFINET with Ethernet-APL (IO1) or the WLAN interface.

The Web server is enabled when the device is delivered. The Web server can be disabled if necessary (e.g. after commissioning) via the **Web server functionality** parameter.

The device and status information can be hidden on the login page. This prevents unauthorized access to the information.

For detailed information on device parameters, see:
"Description of Device Parameters" document → 📄 206.

2.7.4 Access via service interface (CDI-RJ45)

The device can be connected to a network via the service interface (CDI-RJ45). Device-specific functions guarantee the secure operation of the device in a network.

The use of relevant industrial standards and guidelines that have been defined by national and international safety committees, such as IEC/ISA62443 or the IEEE, is recommended. This includes organizational security measures such as the assignment of access authorization as well as technical measures such as network segmentation.

Transmitters with an Ex de approval may not be connected via the service interface (CDI-RJ45)!

Order code for "Approval transmitter + sensor", options (Ex de): BA, BB, C1, C2, GA, GB, MA, MB, NA, NB

3 Product description

The device consists of a transmitter and a sensor.

The device is available as a compact version:
The transmitter and sensor form a mechanical unit.

3.1 Product design

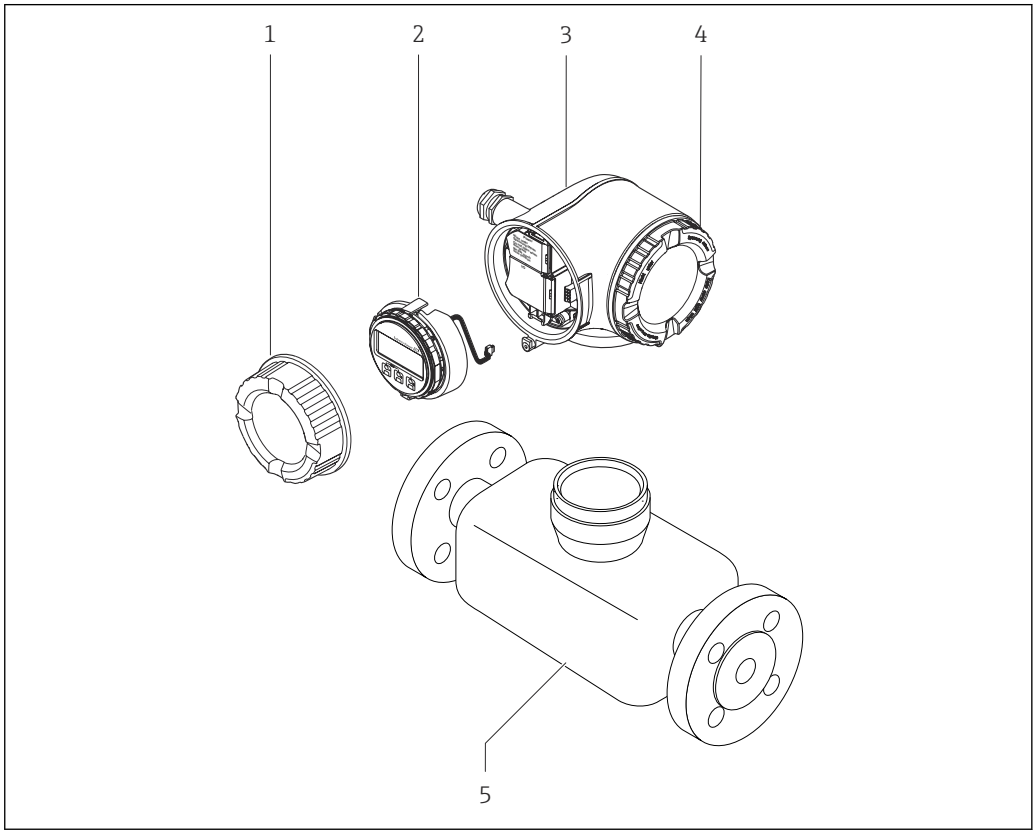

1 Important components of a measuring device

1 Connection compartment cover
2 Display module
3 Transmitter housing
4 Electronics compartment cover
5 Sensor

4 Incoming acceptance and product identification

4.1 Incoming acceptance

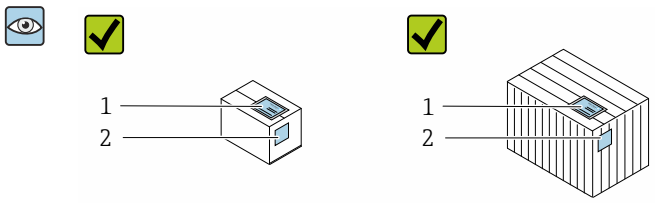

Are the order codes on the delivery note (1) and the product sticker (2) identical?

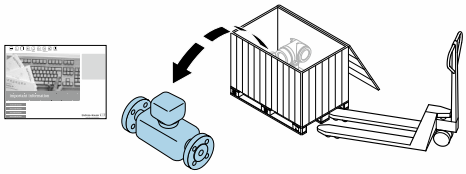

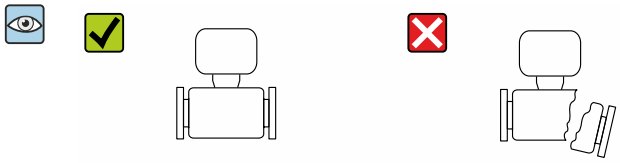

Are the goods undamaged?

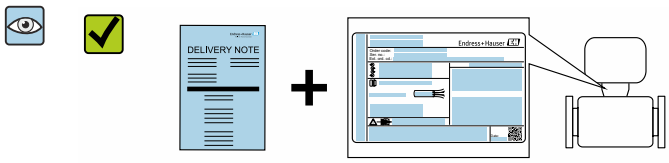

Do the data on the nameplate match the ordering information on the delivery note?

Is the envelope present with accompanying documents?

- If one of the conditions is not satisfied, contact your Endress+Hauser Sales Center.
- The Technical Documentation is available via the Internet or via the *Endress+Hauser Operations App*, see the "Product identification" section → 15.

4.2 Product identification

The following options are available for identification of the device:
- Nameplate specifications
- Order code with breakdown of the device features on the delivery note
- Enter the serial numbers from the nameplates in the *Device Viewer* (www.endress.com/deviceviewer): all the information about the device is displayed.
- Enter the serial numbers from the nameplates into the *Endress+Hauser Operations App* or scan the DataMatrix code on the nameplate with the *Endress+Hauser Operations App*: all the information about the device is displayed.

For an overview of the scope of the associated Technical Documentation, refer to the following:

- The chapters "Additional standard documentation on the device" and "Supplementary device-dependent documentation"
- The *Device Viewer*: Enter the serial number from the nameplate (www.endress.com/deviceviewer)
- The *Endress+Hauser Operations App*: Enter the serial number from the nameplate or scan the DataMatrix code on the nameplate.

4.2.1 Transmitter nameplate

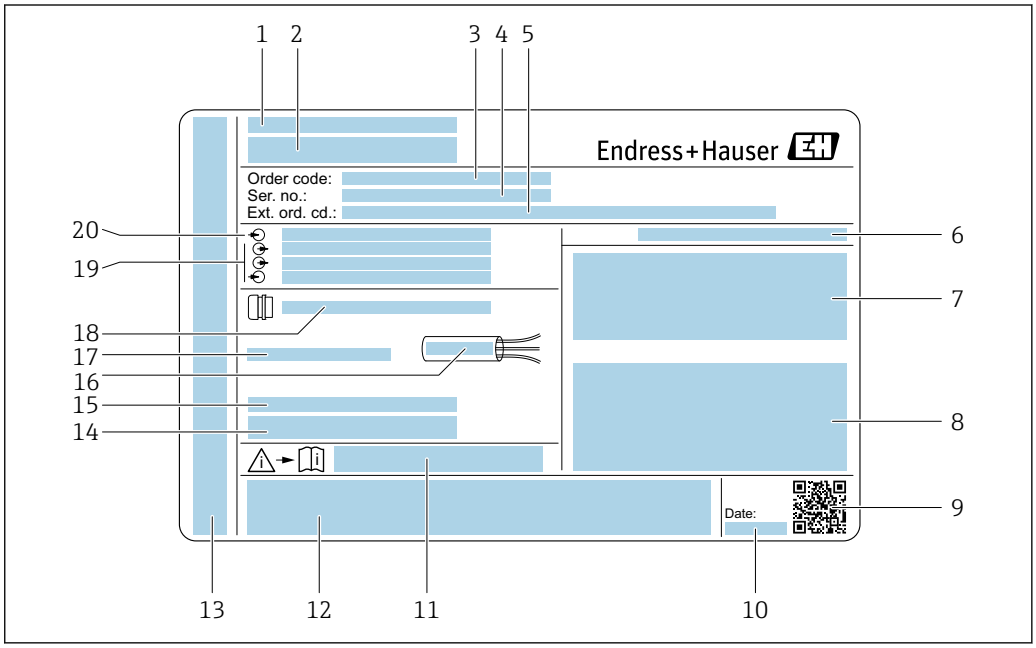

2 *Example of a transmitter nameplate*

1 *Place of manufacture*
2 *Name of the transmitter*
3 *Order code*
4 *Serial number (Ser. no.)*
5 *Extended order code (Ext. ord. cd.)*
6 *Degree of protection*
7 *Space for approvals: use in hazardous areas*
8 *Electrical connection data: available inputs and outputs*
9 *2-D matrix code*
10 *Date of manufacture: year-month*
11 *Document number of safety-related supplementary documentation*
12 *Space for approvals and certificates: e.g. CE mark, RCM tick*
13 *Space for degree of protection of connection and electronics compartment when used in hazardous areas*
14 *Firmware version (FW) and device revision (Dev.Rev.) from the factory*
15 *Space for additional information in the case of special products*
16 *Permitted temperature range for cable*
17 *Permitted ambient temperature (T_a)*
18 *Information on cable gland*
19 *Available inputs and outputs, supply voltage*
20 *Electrical connection data: supply voltage*

4.2.2 Sensor nameplate

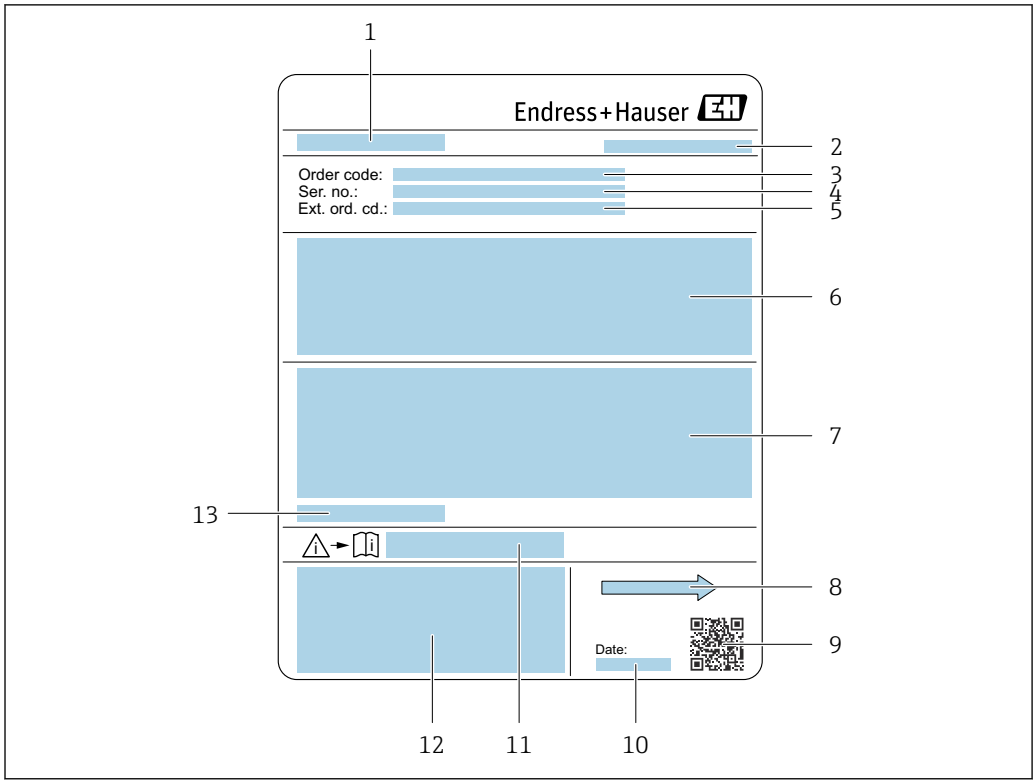

3 *Example of sensor nameplate*

1 *Name of the sensor*
2 *Place of manufacture*
3 *Order code*
4 *Serial number (Ser. no.)*
5 *Extended order code (Ext. ord. cd.)*
6 *Flow; nominal diameter of the sensor; pressure rating; nominal pressure; system pressure; medium temperature range; material of liner and electrodes*
7 *Approval information for explosion protection, Pressure Equipment Directive and degree of protection*
8 *Flow direction*
9 *2-D matrix code*
10 *Date of manufacture: year-month*
11 *Document number of safety-related supplementary documentation*
12 *CE mark, RCM-Tick mark*
13 *Permitted ambient temperature (T_a)*

Order code
The measuring device is reordered using the order code.

Extended order code
- The device type (product root) and basic specifications (mandatory features) are always listed.
- Of the optional specifications (optional features), only the safety and approval-related specifications are listed (e.g. LA). If other optional specifications are also ordered, these are indicated collectively using the # placeholder symbol (e.g. #LA#).
- If the ordered optional specifications do not include any safety and approval-related specifications, they are indicated by the + placeholder symbol (e.g. XXXXXX-ABCDE +).

4.2.3 Symbols on measuring device

Symbol	Meaning
⚠	**WARNING!** This symbol alerts you to a dangerous situation. Failure to avoid this situation can result in serious or fatal injury. To determine the nature of the potential hazard and the measures required to avoid it, consult the documentation accompanying the measuring device.
📖	**Reference to documentation** Refers to the corresponding device documentation.
⏚	**Protective ground connection** A terminal which must be connected to ground prior to establishing any other connections.

5 Storage and transport

5.1 Storage conditions

Observe the following notes for storage:
- Store in the original packaging to ensure protection from shock.
- Do not remove protective covers or protective caps installed on process connections. They prevent mechanical damage to the sealing surfaces and contamination in the measuring pipe.
- Protect from direct sunlight to avoid unacceptably high surface temperatures.
- Select a storage location where moisture cannot collect in the measuring device as fungus and bacteria infestation can damage the liner.
- Store in a dry and dust-free place.
- Do not store outdoors.

Storage temperature → 192

5.2 Transporting the product

Transport the measuring device to the measuring point in the original packaging.

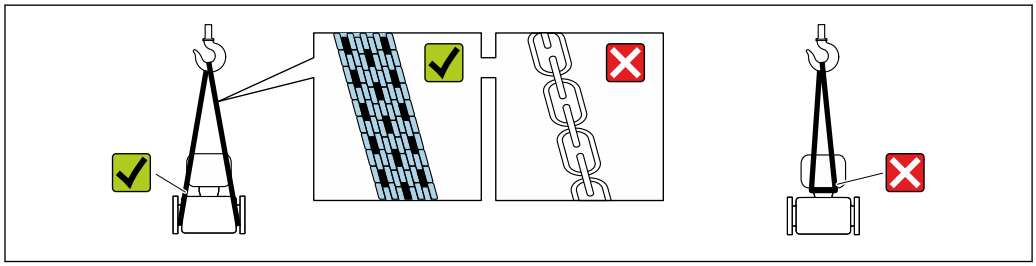

A0029252

Do not remove protective covers or caps installed on process connections. They prevent mechanical damage to the sealing surfaces and contamination in the measuring tube.

5.2.1 Measuring devices without lifting lugs

WARNING

Center of gravity of the measuring device is higher than the suspension points of the webbing slings.

Risk of injury if the measuring device slips.
- Secure the measuring device against slipping or turning.
- Observe the weight specified on the packaging (stick-on label).

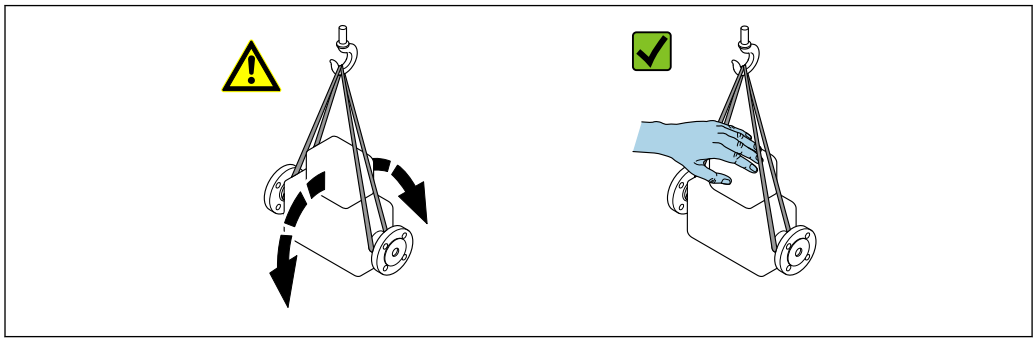

A0029214

5.2.2 Measuring devices with lifting lugs

⚠ CAUTION

Special transportation instructions for devices with lifting lugs

- ▶ Only use the lifting lugs fitted on the device or flanges to transport the device.
- ▶ The device must always be secured at two lifting lugs at least.

5.2.3 Transporting with a fork lift

If transporting in wood crates, the floor structure enables the crates to be lifted lengthwise or at both sides using a forklift.

⚠ CAUTION

Risk of damaging the magnetic coil

- ▶ If transporting by forklift, do not lift the sensor by the metal casing.
- ▶ This would buckle the casing and damage the internal magnetic coils.

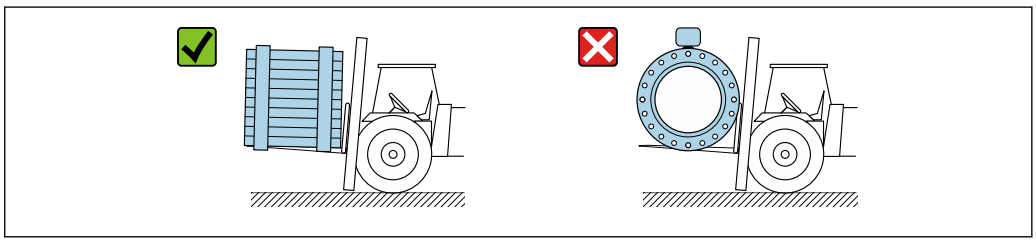

A0029319

5.3 Packaging disposal

All packaging materials are environmentally friendly and 100 % recyclable:

- Outer packaging of device
  Polymer stretch wrap, complying with EU Directive 2002/95/EC (RoHS)
- Packaging
  - Wooden crate treated in accordance with ISPM 15 standard, confirmed by IPPC logo
  - Cardboard box in accordance with European packaging guideline 94/62EC, recyclability confirmed by Resy symbol
- Carrying and securing materials
  - Disposable plastic pallet
  - Plastic straps
  - Plastic adhesive strips
- Filler material
  Paper pads

6 Mounting

6.1 Mounting requirements

6.1.1 Mounting position

Mounting location

- Do not install the device at the highest point of the pipe.
- Do not install the device upstream from a free pipe outlet in a down pipe.

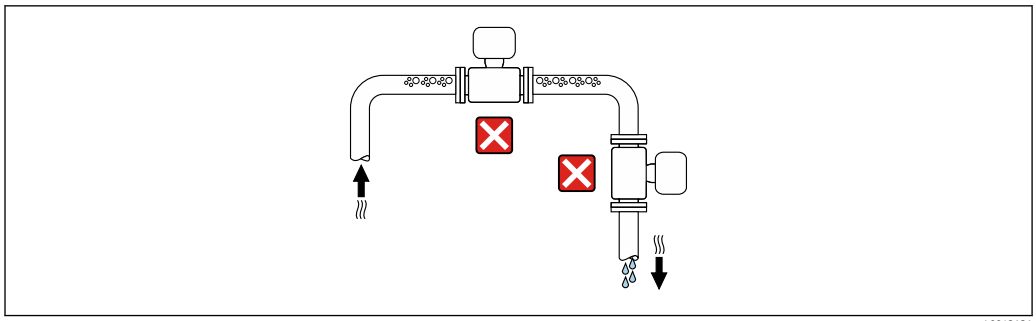

A0042131

The device should ideally be installed in an ascending pipe.

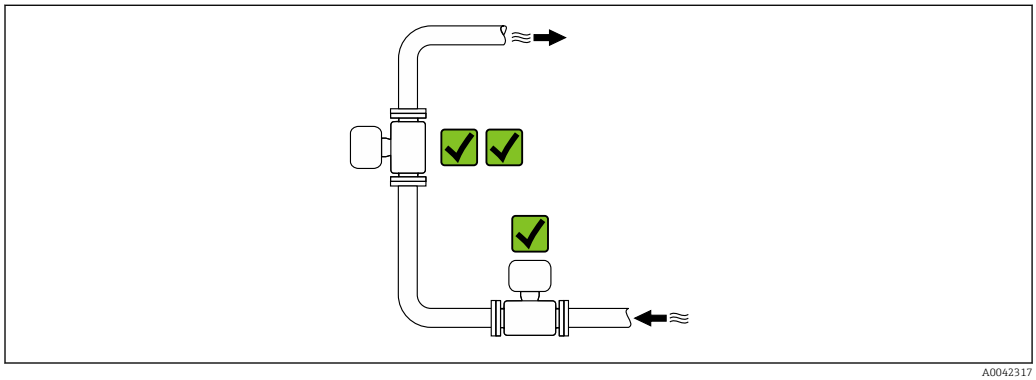

A0042317

Installation upstream from a down pipe

NOTICE

Negative pressure in the measuring pipe can damage the liner!

- ▶ If installing upstream of down pipes whose length h ≥ 5 m (16.4 ft): install a siphon with a vent valve downstream of the device.

This arrangement prevents the flow of liquid stopping in the pipe and air entrainment.

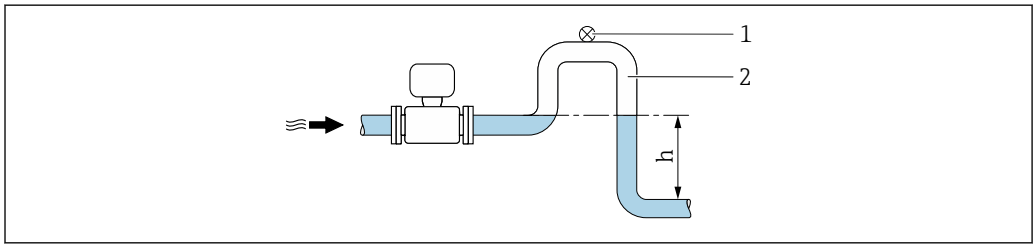

A0028981

1 *Vent valve*
2 *Pipe siphon*
h *Length of down pipe*

Installation with partially filled pipes

- Partially filled pipes with a gradient require a drain-type configuration.
- The installation of a cleaning valve is recommended.

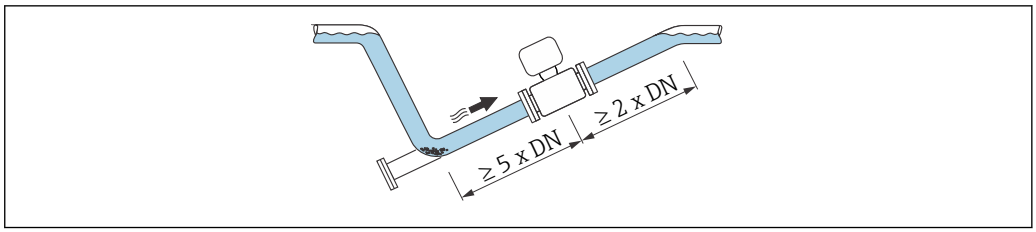

A0041088

Installation near pumps

NOTICE

Negative pressure in the measuring pipe can damage the liner!

- In order to maintain the system pressure, install the device in the flow direction downstream from the pump.
- Install pulsation dampers if reciprocating, diaphragm or peristaltic pumps are used.

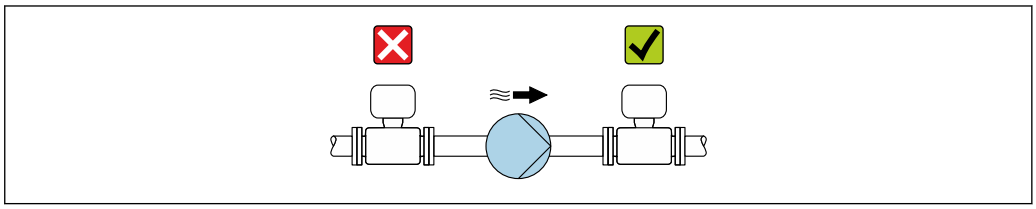

A0041083

- Information on the liner's resistance to partial vacuum
- Information on the measuring system's resistance to vibration and shock → 192

Installation in event of pipe vibrations

A remote version is recommended in the event of strong pipe vibrations.

NOTICE

Pipe vibrations can damage the device!

- Do not expose the device to strong vibrations.
- Support the pipe and fix it in place.
- Support the device and fix it in place.
- Mount the sensor and transmitter separately.

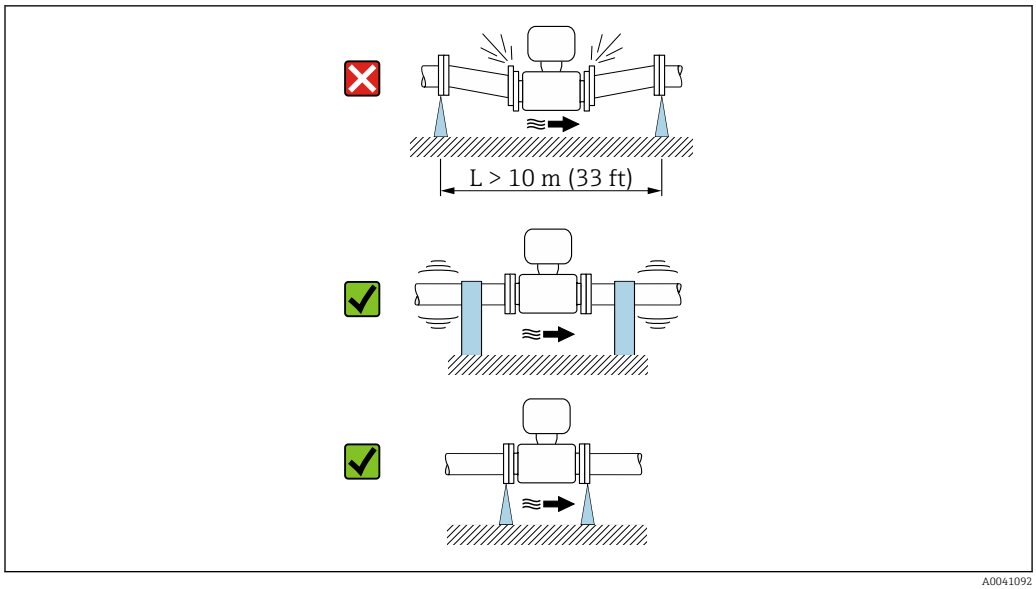

Information on the measuring system's resistance to vibration and shock → 192

Orientation

The direction of the arrow on the sensor nameplate helps you to install the sensor according to the flow direction (direction of medium flow through the piping).

Orientation		Recommendation
Vertical orientation	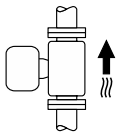 A0015591	✓✓
Horizontal orientation	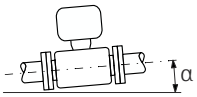 A0041328	✓ 1)
Horizontal orientation, transmitter at bottom	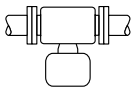 A0015590	✓✓ 2) 3) ✗ 4)
Horizontal orientation, transmitter at side	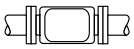 A0015592	✗

1) The measuring device should be self-draining for hygiene applications. A vertical orientation is recommended for this. If only a horizontal orientation is possible, an angle of inclination α ≥ 10° is recommended.
2) Applications with high process temperatures may increase the ambient temperature. To maintain the maximum ambient temperature for the transmitter, this orientation is recommended.
3) To prevent the electronics from overheating in the event of strong heat formation (e.g. CIP or SIP cleaning process), install the device with the transmitter part pointing downwards.
4) When the empty pipe detection function is switched on, empty pipe detection only works if the transmitter housing is pointing upwards.

Vertical

Optimum for self-emptying pipe systems and for use in conjunction with empty pipe detection.

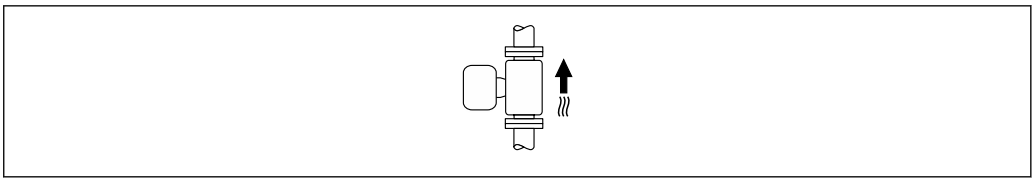

A0015591

Horizontal

- Ideally, the measuring electrode plane should be horizontal. This prevents brief insulation of the measuring electrodes by entrained air bubbles.
- Empty pipe detection only works if the transmitter housing is pointing upwards as otherwise there is no guarantee that the empty pipe detection function will actually respond to a partially filled or empty measuring tube.

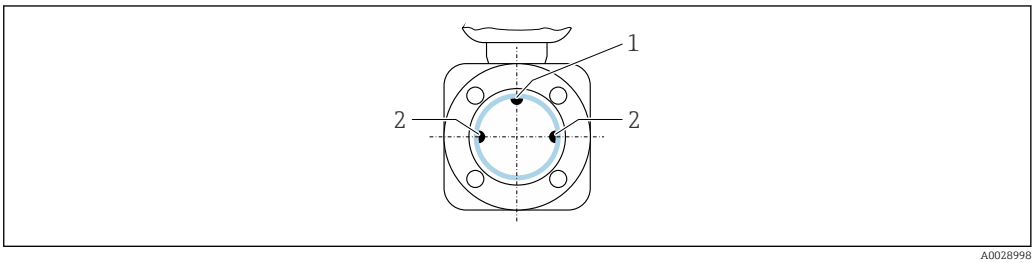

A0028998

1 *EPD electrode for empty pipe detection (available from DN > 15 mm (½ in))*
2 *Measuring electrodes for signal detection*

Measuring devices with a nominal diameter < DN 15 mm (½ in) do not have an EPD electrode. In this case, empty pipe detection is performed via the measuring electrodes.

Inlet and outlet runs

Installation with inlet and outlet runs

To avoid a vacuum and to maintain the specified level of accuracy, install the device upstream from assemblies that produce turbulence (e.g. valves, T-sections) and downstream from pumps.

Maintain straight, unimpeded inlet and outlet runs.

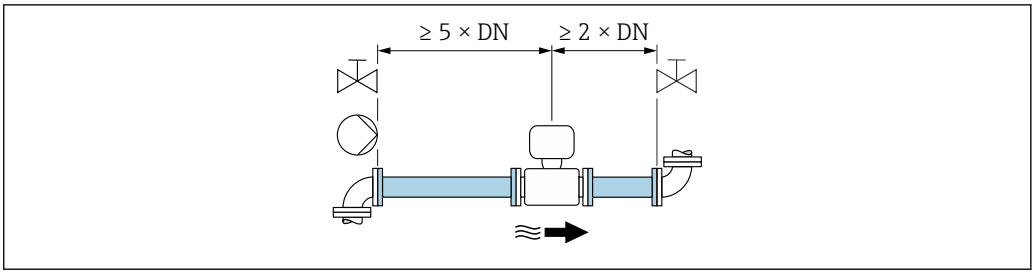

A0028997

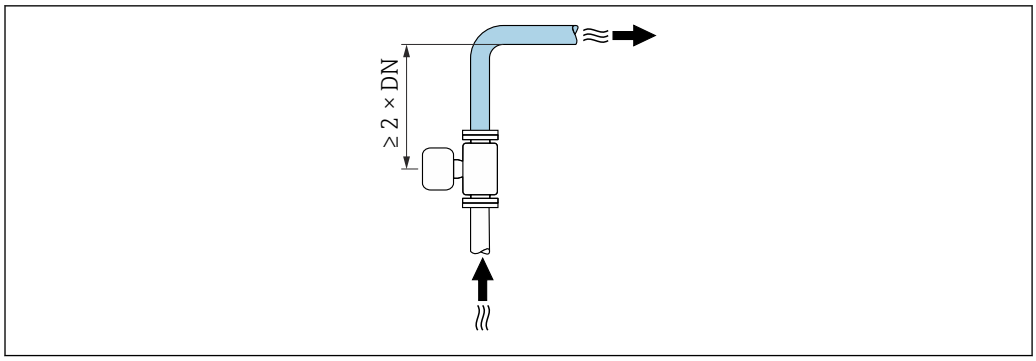

A0042132

Dimensions

For the dimensions and installation lengths of the device, see the "Technical Information" document, "Mechanical construction" section .

6.1.2 Environment and process requirements

Ambient temperature range

Transmitter	Standard: −40 to +60 °C (−40 to +140 °F)
Local display	−20 to +60 °C (−4 to +140 °F), the readability of the display may be impaired at temperatures outside the temperature range.
Sensor	−40 to +60 °C (−40 to +140 °F)
Liner	Do not exceed or fall below the permitted temperature range of the liner .

If operating outdoors:
- Install the measuring device in a shady location.
- Avoid direct sunlight, particularly in warm climatic regions.
- Avoid direct exposure to weather conditions.

System pressure

Installation near pumps → 📄 21

Vibrations

Installation in event of pipe vibrations → 📄 21

Adapters

Suitable adapters to DIN EN 545 (double-flange reducers) can be used to install the sensor in larger-diameter pipes. The resultant increase in the rate of flow improves measuring accuracy with very slow-moving fluids. The nomogram shown here can be used to calculate the pressure loss caused by reducers and expanders.

- The nomogram only applies to liquids with a viscosity similar to that of water.
- If the medium has a high viscosity, a larger measuring tube diameter can be considered in order to reduce pressure loss.

1. Calculate the ratio of the diameters d/D.
2. From the nomogram read off the pressure loss as a function of flow velocity (downstream from the reduction) and the d/D ratio.

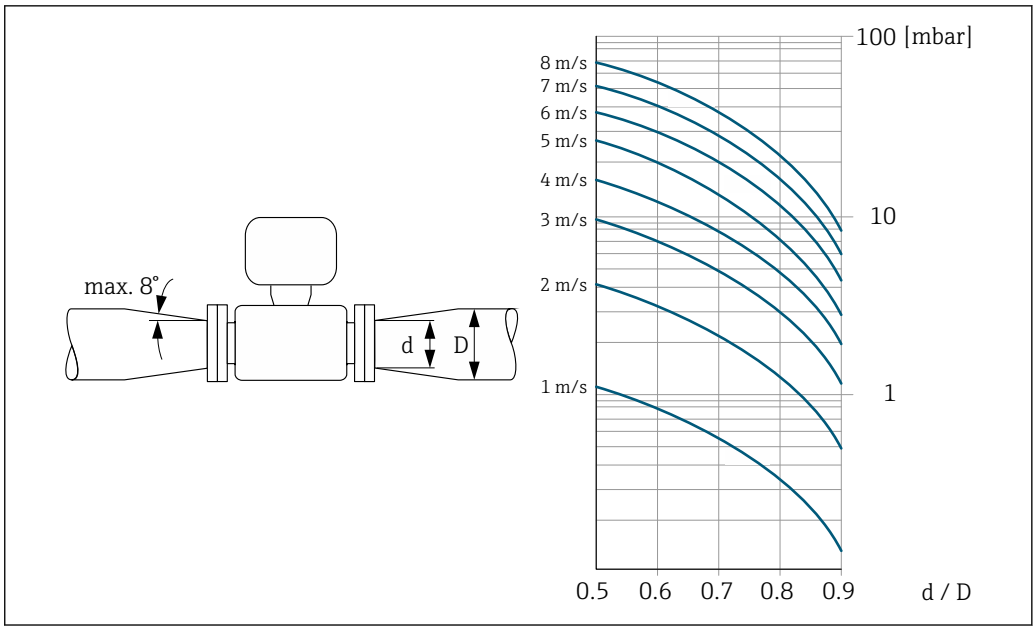

6.1.3 Special mounting instructions

Weather protection cover

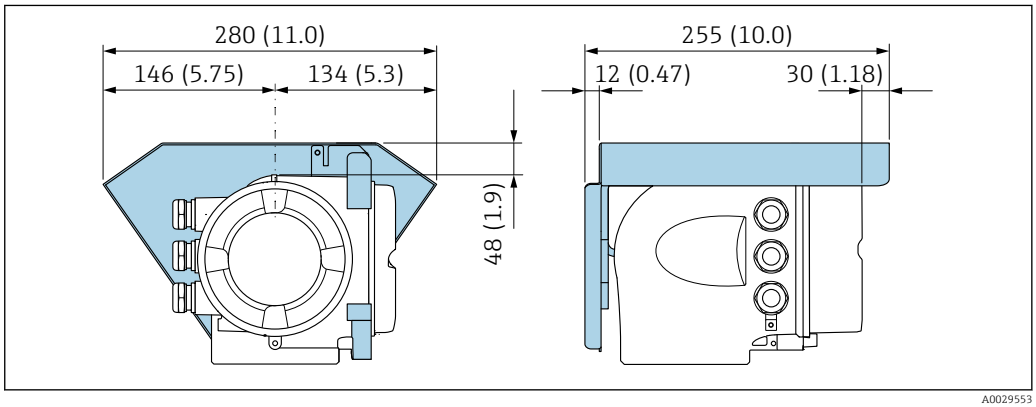

4 *Engineering unit mm (in)*

Hygienic compatibility

- When installing in hygienic applications, please refer to the information in the "Certificates and approvals/hygienic compatibility" section → 203
- In the case of measuring devices with the order code for "Housing", option B "Stainless, hygienic", to seal the connection compartment cover, screw it closed finger-tight and tighten it by another 45° (corresponds to 15 Nm).

6.2 Mounting the measuring device

6.2.1 Required tools

For sensor

For flanges and other process connections: use a suitable mounting tool

6.2.2 Preparing the measuring device

1. Remove all remaining transport packaging.
2. Remove any protective covers or protective caps present from the sensor.
3. Remove stick-on label on the electronics compartment cover.

6.2.3 Turning the transmitter housing

To provide easier access to the connection compartment or display module, the transmitter housing can be turned.

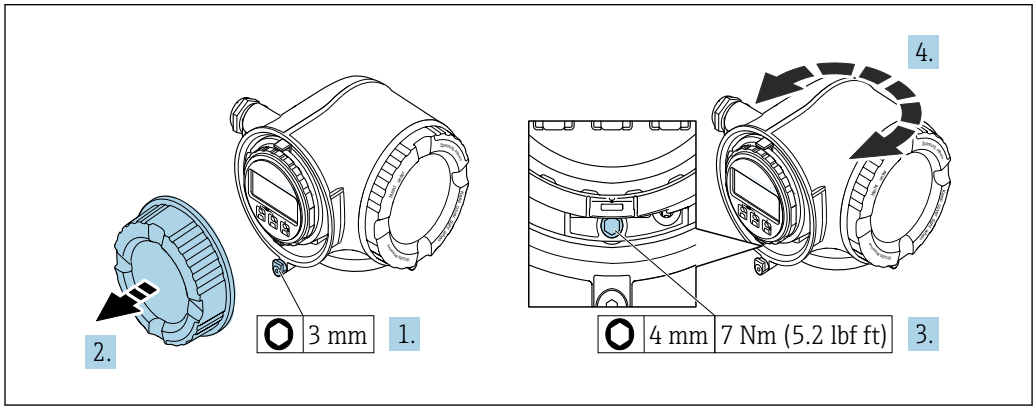

5 *Non-Ex housing*

1. Depending on the device version: Loosen the securing clamp of the connection compartment cover.
2. Unscrew the connection compartment cover.
3. Loosen the securing screw.
4. Turn the housing to the desired position.
5. Tighten the securing screw.
6. Screw on the connection compartment cover.
7. Depending on the device version: Attach the securing clamp of the connection compartment cover.

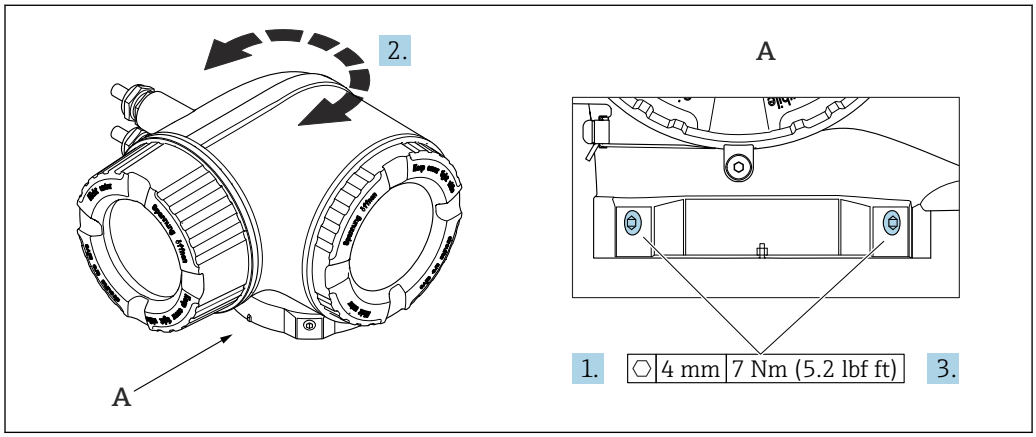

6 *Ex housing*

1. Loosen the fixing screws.
2. Turn the housing to the desired position.
3. Tighten the securing screws.

6.2.4 Turning the display module

The display module can be turned to optimize display readability and operability.

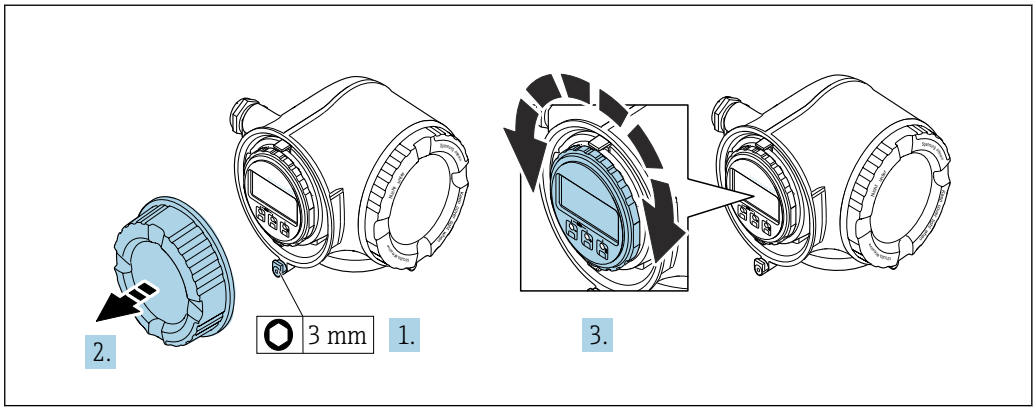

A0030035

1. Depending on the device version: Loosen the securing clamp of the connection compartment cover.
2. Unscrew the connection compartment cover.
3. Turn the display module to the desired position: max. 8 × 45° in each direction.
4. Screw on the connection compartment cover.
5. Depending on the device version: Attach the securing clamp of the connection compartment cover.

6.3 Post-installation check

Is the device undamaged (visual inspection)?	❑
Does the measuring device conform to the measuring point specifications? For example: ▪ Process temperature ▪ Process pressure (refer to the section on "Pressure-temperature ratings" in the "Technical Information" document) ▪ Ambient temperature ▪ Measuring range	❑
Has the correct orientation been selected for the sensor → 🗎 22 ? ▪ According to sensor type ▪ According to medium temperature ▪ According to medium properties (outgassing, with entrained solids)	❑
Does the arrow on the sensor nameplate match the actual direction of flow of the fluid through the piping → 🗎 22?	❑
Are the measuring point identification and labeling correct (visual inspection)?	❑
Have the fixing screws been tightened with the correct tightening torque?	❑

7 Electrical connection

⚠ WARNING

Live parts! Incorrect work performed on the electrical connections can result in an electric shock.

- ▶ Set up a disconnecting device (switch or power-circuit breaker) to easily disconnect the device from the supply voltage.
- ▶ In addition to the device fuse, include an overcurrent protection unit with max. 10 A in the plant installation.

7.1 Electrical safety

In accordance with applicable national regulations.

7.2 Connecting requirements

7.2.1 Required tools

- For cable entries: Use corresponding tools
- For securing clamp: Allen key 3 mm
- Wire stripper
- When using stranded cables: Crimper for wire end ferrule
- For removing cables from terminal: Flat blade screwdriver ≤ 3 mm (0.12 in)

7.2.2 Requirements for connecting cable

The connecting cables provided by the customer must fulfill the following requirements.

Protective grounding cable for the outer ground terminal

Conductor cross-section < 2.1 mm^2 (14 AWG)

The use of a cable lug enables the connection of larger cross-sections.

The grounding impedance must be less than 2 Ω.

Permitted temperature range

- The installation guidelines that apply in the country of installation must be observed.
- The cables must be suitable for the minimum and maximum temperatures to be expected.

Power supply cable (incl. conductor for the inner ground terminal)

Standard installation cable is sufficient.

Signal cable

PROFINET with Ethernet-APL

The reference cable type for APL segments is fieldbus cable type A, MAU type 1 and 3 (specified in IEC 61158-2). This cable meets the requirements for intrinsically safe applications according to IEC TS 60079-47 and can also be used in non-intrinsically safe applications.

Cable type	A
Cable capacitance	45 to 200 nF/km

Loop resistance	15 to 150 Ω/km
Cable inductance	0.4 to 1 mH/km

Further details are provided in the Ethernet-APL Engineering Guideline (https://www.ethernet-apl.org).

Current output 0/4 to 20 mA

Standard installation cable is sufficient

Pulse /frequency /switch output

Standard installation cable is sufficient

Relay output

Standard installation cable is sufficient.

Current input 0/4 to 20 mA

Standard installation cable is sufficient

Status input

Standard installation cable is sufficient

Cable diameter

- Cable glands supplied:
  M20 × 1.5 with cable Ø 6 to 12 mm (0.24 to 0.47 in)
- Spring-loaded terminals: Suitable for strands and strands with ferrules.
  Conductor cross-section 0.2 to 2.5 mm^2 (24 to 12 AWG).

Requirements for connecting cable – remote display and operating module DKX001

Optionally available connecting cable

A cable is supplied depending on the order option
- Order code for measuring device: order code **030** for "Display; operation", option **O**
  or
- Order code for measuring device: order code **030** for "Display; operation", option **M**
  and
- Order code for DKX001: order code **040** for "Cable", option **A, B, D, E**

Standard cable	2 × 2 × 0.34 mm^2 (22 AWG) PVC cable with common shield (2 pairs, pair-stranded)
Flame resistance	According to DIN EN 60332-1-2
Oil resistance	According to DIN EN 60811-2-1
Shield	Tin-plated copper braid, optical cover ≥ 85 %
Capacitance: core/shield	≤ 200 pF/m
L/R	≤ 24 µH/Ω
Available cable length	5 m (15 ft)/10 m (35 ft)/20 m (65 ft)/30 m (100 ft)
Operating temperature	When mounted in a fixed position: −50 to +105 °C (−58 to +221 °F); when cable can move freely: −25 to +105 °C (−13 to +221 °F)

Standard cable - customer-specific cable

With the following order option, no cable is supplied with the device and must be provided by the customer:
Order code for DKX001: Order code **040** for "Cable", option **1** "None, provided by customer, max 300 m"

A standard cable with the following minimum requirements can be used as the connecting cable, even in the hazardous area (Zone 2, Class I, Division 2 and Zone 1, Class I, Division 1):

Standard cable	4 wires (2 pairs); pair-stranded with common shield, minimum wire cross-section 0.34 mm^2 (22 AWG)
Shield	Tin-plated copper braid, optical cover ≥ 85 %
Cable impedance (pair)	Minimum 80 Ω
Cable length	Maximum 300 m (1 000 ft), maximum loop impedance 20 Ω
Capacitance: core/shield	Maximum 1 000 nF for Zone 1, Class I, Division 1
L/R	Maximum 24 µH/Ω for Zone 1, Class I, Division 1

7.2.3 Terminal assignment

Transmitter: supply voltage, input/outputs

The terminal assignment of the inputs and outputs depends on the individual order version of the device. The device-specific terminal assignment is documented on an adhesive label in the terminal cover.

Supply voltage		Input/output 1		Input/output 2		Input/output 3	
1 (+)	2 (–)	26 (+)	27 (–)	24 (+)	25 (–)	22 (+)	23 (–)
		Device-specific terminal assignment: adhesive label in terminal cover.					

Terminal assignment of the remote display and operating module → 35.

7.2.4 Available device plugs

Device plugs may not be used in hazardous areas!

Order code for "Input; output 1", option RB "PROFINET with Ethernet-APL"

Order code "Electrical connection"	Cable entry/connection	
	2	3
L, N, P, U	M12 plug × 1	–

7.2.5 device plug pin assignment

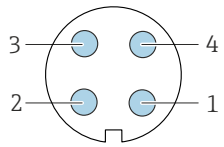

Pin	Assignment	Coding	Plug/socket
1	APL signal -	A	Socket
2	APL signal +		
3	Cable shield[1]		
4	Not assigned		
Metal plug housing	Cable shield		
[1]If a cable shield is used			

7.2.6 Preparing the measuring device

NOTICE

Insufficient sealing of the housing!

Operational reliability of the measuring device could be compromised.

- Use suitable cable glands corresponding to the degree of protection.

1. Remove dummy plug if present.
2. If the measuring device is supplied without cable glands:
   Provide suitable cable gland for corresponding connecting cable.
3. If the measuring device is supplied with cable glands:
   Observe requirements for connecting cables → 28.

7.3 Connecting the measuring device

NOTICE

An incorrect connection compromises electrical safety!

- Have electrical connection work carried out by appropriately trained specialists only.
- Observe applicable federal/national installation codes and regulations.
- Comply with local workplace safety regulations.
- Always connect the protective ground cable ⏚ before connecting additional cables.
- When using in potentially explosive atmospheres, observe the information in the device-specific Ex documentation.

7.3.1 Connecting the transmitter

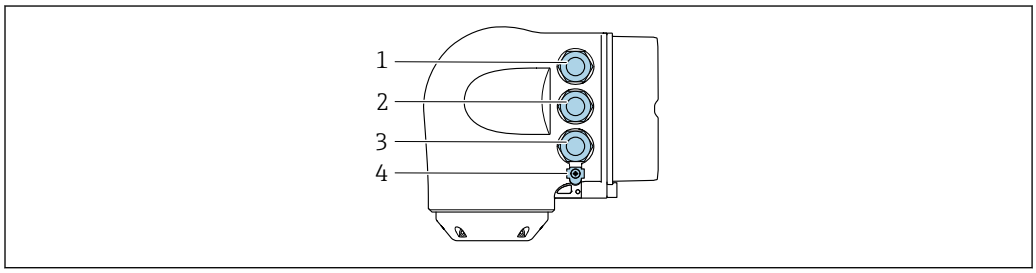

A0026781

1 *Terminal connection for supply voltage*
2 *Terminal connection for signal transmission, input/output*
3 *Terminal connection for signal transmission, input/output or terminal connection for network connection via service interface (CDI-RJ45); optional: connection for external WLAN antenna or remote display and operating module DKX001*
4 *Protective earth (PE)*

In addition to connecting the device via PROFINET with Ethernet-APL and the available inputs/outputs, an additional connection option is also available: Integrate into a network via the service interface (CDI-RJ45) .

Connecting the plug

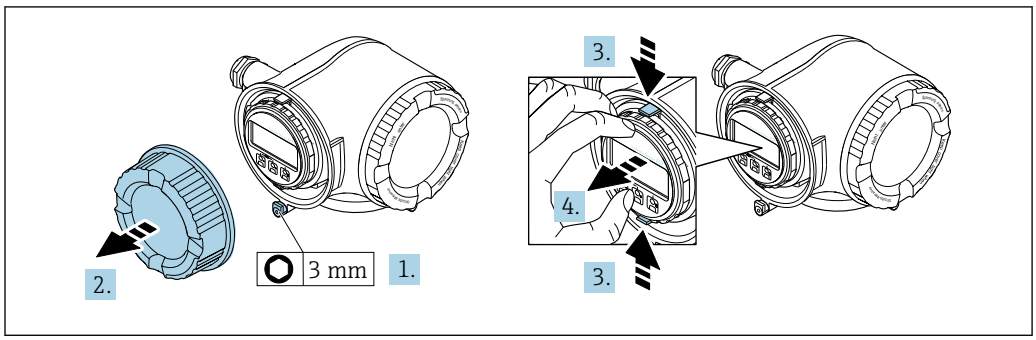

A0029813

1. Loosen the securing clamp of the connection compartment cover.
2. Unscrew the connection compartment cover.
3. Squeeze the tabs of the display module holder together.
4. Remove the display module holder.

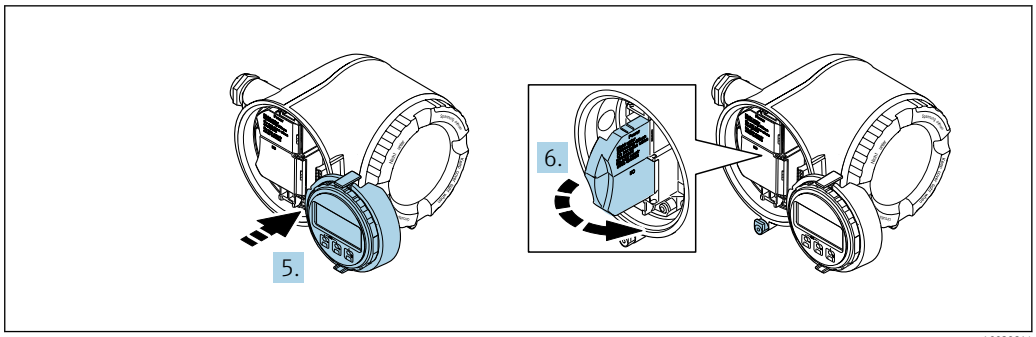

A0029814

5. Attach the holder to the edge of the electronics compartment.
6. Open the terminal cover.

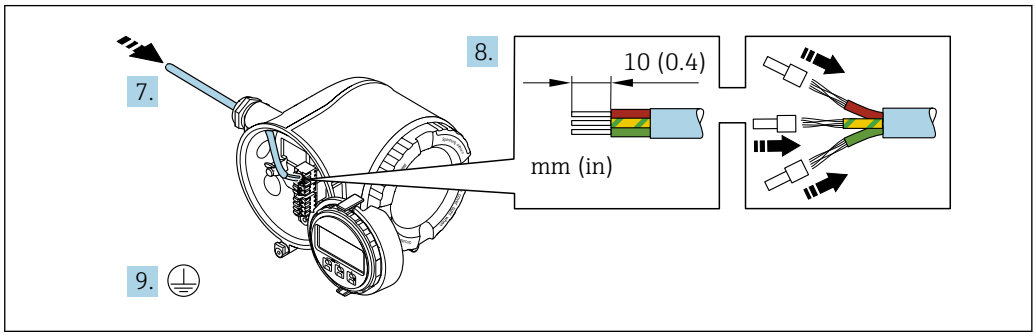

A0051111

7. Push the cable through the cable entry. To ensure tight sealing, do not remove the sealing ring from the cable entry.
8. Strip the cable and cable ends and connect to terminals 26-27. In the case of stranded cables, also fit ferrules.
9. Connect protective earth (PE).
10. Firmly tighten the cable glands.
    ↳ This concludes the connection via the APL port.

Connecting the supply voltage and additional inputs/outputs

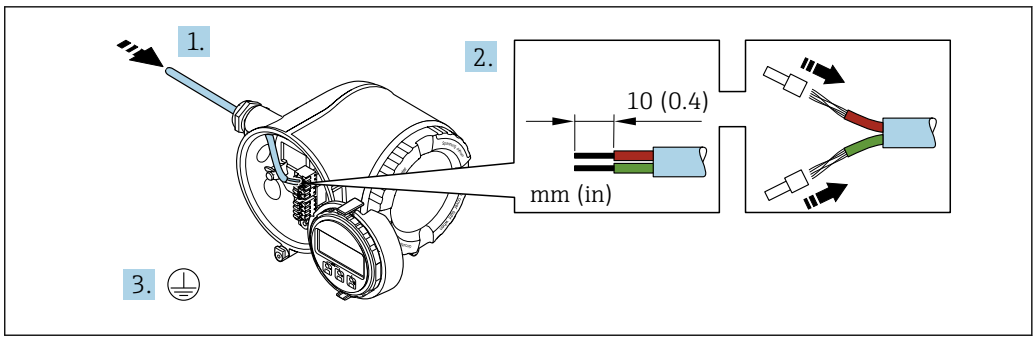

A0051128

1. Push the cable through the cable entry. To ensure tight sealing, do not remove the sealing ring from the cable entry.
2. Strip the cable and cable ends. In the case of stranded cables, also fit ferrules.
3. Connect the protective ground.

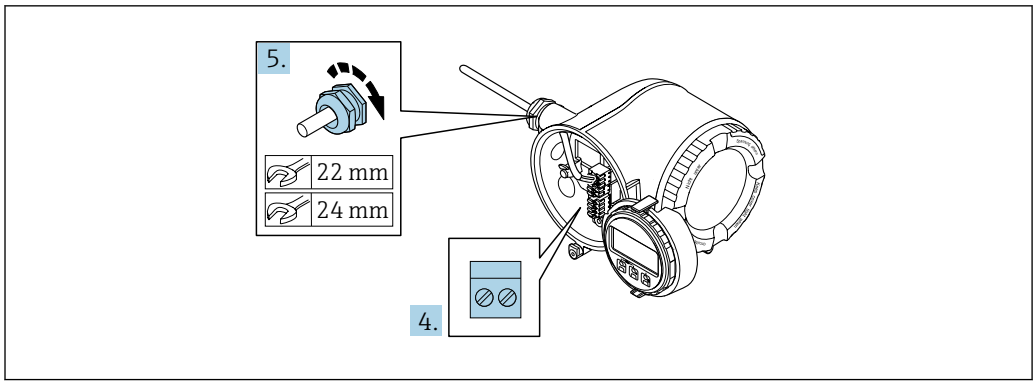

A0033984

4. Connect the cable according to the terminal assignment.
   ↳ **Signal cable terminal assignment:** The device-specific terminal assignment is documented on an adhesive label in the terminal cover.
   Supply voltage terminal assignment: Adhesive label in the terminal cover or → 31.
5. Firmly tighten the cable glands.
   ↳ This concludes the cable connection process.
6. Close the terminal cover.
7. Fit the display module holder in the electronics compartment.
8. Screw on the connection compartment cover.
9. Secure the securing clamp of the connection compartment cover.

Removing a cable

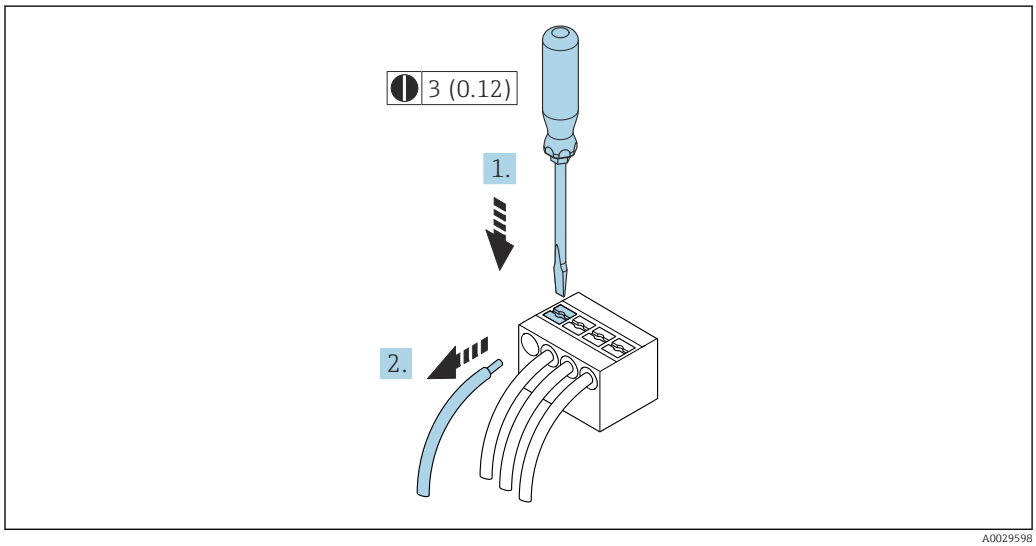

A0029598

7 *Engineering unit mm (in)*

1. To remove a cable from the terminal, use a flat-blade screwdriver to push the slot between the two terminal holes
2. while simultaneously pulling the cable end out of the terminal.

7.3.2 Connecting the remote display and operating module DKX001

The remote display and operating module DKX001 is available as an optional extra → 176.

- The remote display and operating module DKX001 is only available for the following housing version: order code for "Housing": option A "Aluminum, coated"
- The measuring device is always supplied with a dummy cover when the remote display and operating module DKX001 is ordered directly with the measuring device. Display or operation at the transmitter is not possible in this case.
- If ordered subsequently, the remote display and operating module DKX001 may not be connected at the same time as the existing measuring device display module. Only one display or operation unit may be connected to the transmitter at any one time.

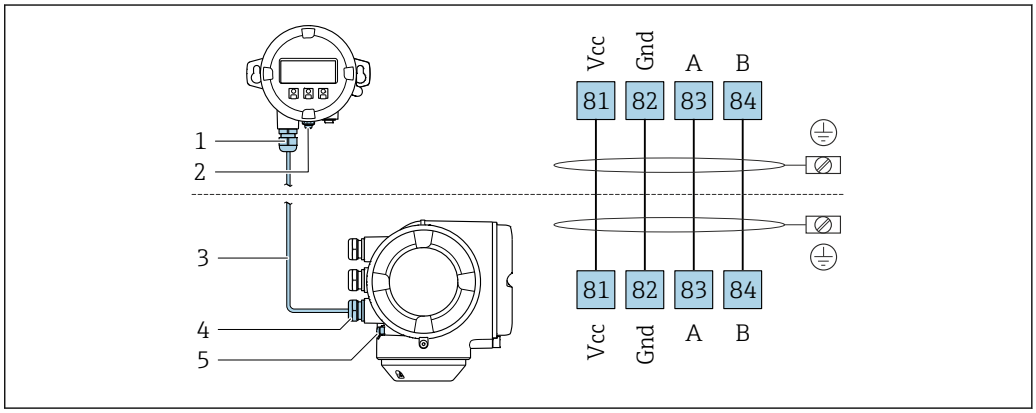

1 *Remote display and operating module DKX001*
2 *Terminal connection for potential equalization (PE)*
3 *Connecting cable*
4 *Measuring device*
5 *Terminal connection for potential equalization (PE)*

7.4 Ensuring potential equalization

7.4.1 Requirements

For potential equalization:
- Pay attention to in-house grounding concepts
- Take account of operating conditions like the pipe material and grounding
- Connect the medium, sensor and transmitter to the same electrical potential
- Use a ground cable with a minimum cross-section of 6 mm^2 (0.0093 in^2) and a cable lug for potential equalization connections

For devices intended for use in hazardous locations, please observe the guidelines in the Ex documentation (XA).

7.4.2 Connection example, standard scenario

Metal process connections

Potential equalization is generally via the metal process connections that are in contact with the medium and mounted directly on the sensor. Therefore there is generally no need for additional potential equalization measures.

7.4.3 Connection example in special situations

Plastic process connections

In the case of plastic process connections, additional grounding rings or process connections with an integrated grounding electrode must be used to ensure potential matching between the sensor and the fluid. If there is no potential matching, this can affect the measuring accuracy or cause the destruction of the sensor as a result of the electrochemical decomposition of the electrodes.

Note the following when using grounding rings:
- Depending on the option ordered, plastic disks are used instead of grounding rings on some process connections. These plastic disks only act as "spacers" and do not have any potential matching function. Furthermore, they also perform a significant sealing function at the sensor/connection interface. Therefore, in the case of process connections without metal grounding rings, these plastic disks/seals should never be removed and should always be installed!
- Grounding rings can be ordered separately as an accessory from Endress+Hauser . When ordering make sure that the grounding rings are compatible with the material used for the electrodes, as otherwise there is the danger that the electrodes could be destroyed by electrochemical corrosion!
- Grounding rings, including seals, are mounted inside the process connections. Therefore the installation length is not affected.

Potential equalization via additional grounding ring

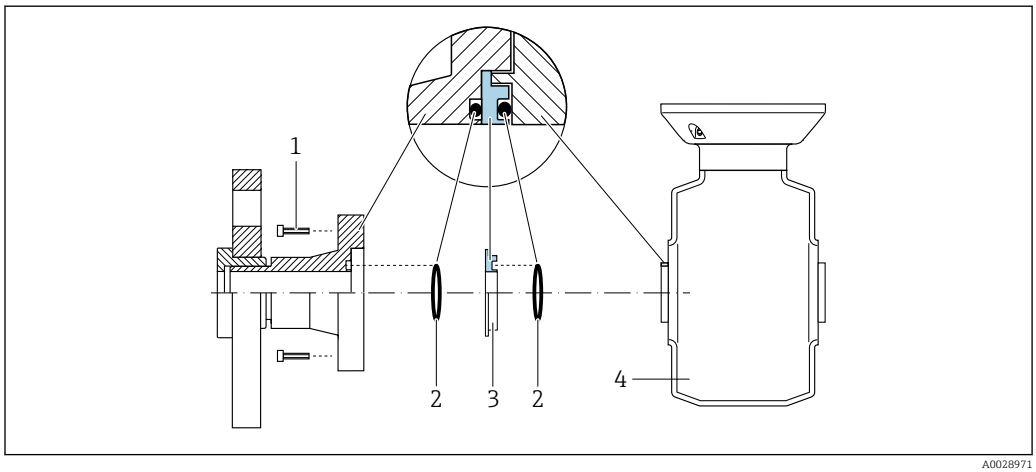

1 *Hexagonal-headed bolts of process connection*
2 *O-ring seals*
3 *Plastic disk (spacer) or grounding ring*
4 *Sensor*

Potential equalization via grounding electrodes on process connection

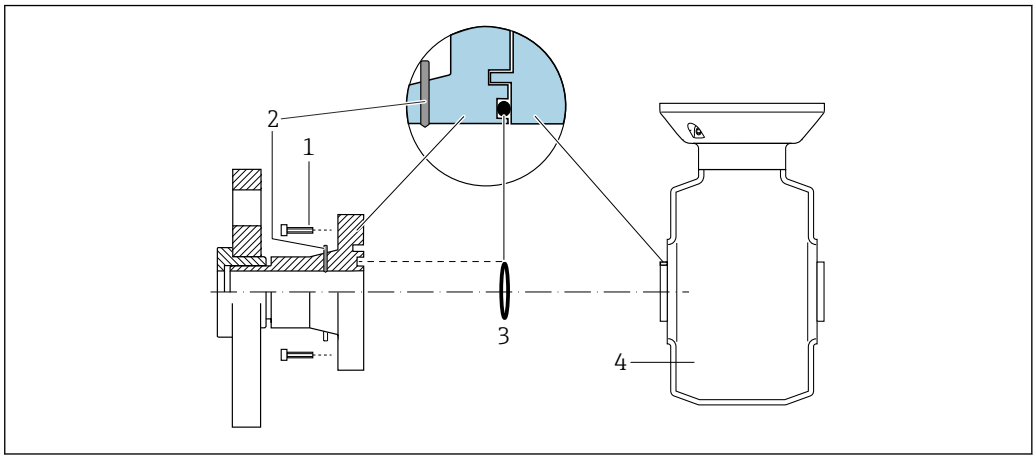

A0028972

1 *Hexagonal-headed bolts of process connection*
2 *Integrated grounding electrodes*
3 *O-ring seal*
4 *Sensor*

7.5 Special connection instructions

7.5.1 Connection examples

PROFINET with Ethernet-APL

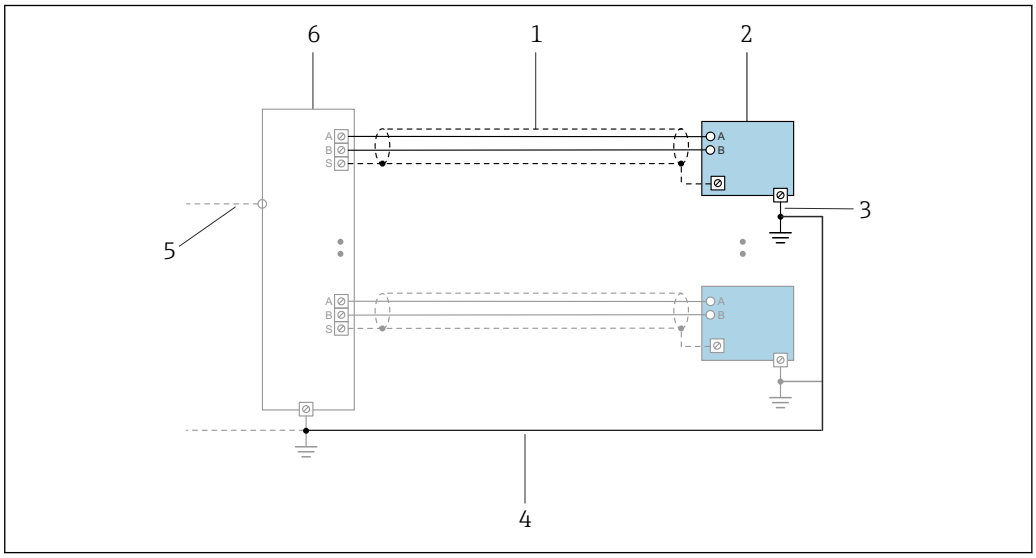

A0047536

8 *Connection example for PROFINET with Ethernet-APL*

1 *Cable shield*
2 *Measuring device*
3 *Local grounding*
4 *Potential equalization*
5 *Trunk or TCP*
6 *Field switch*

Current output 4-20 mA

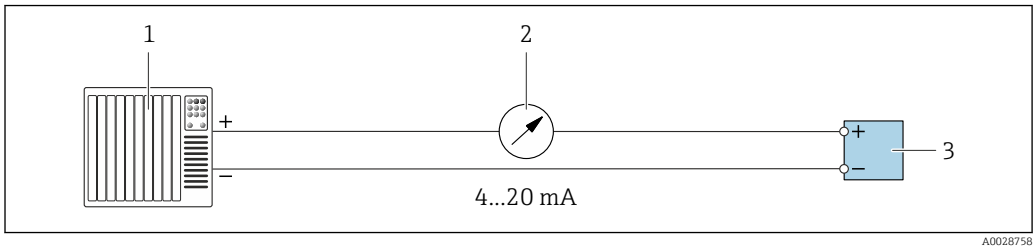

9 Connection example for 4-20 mA current output (active)

1 *Automation system with current input (e.g. PLC)*
2 *Analog display unit: observe maximum load*
3 *Transmitter*

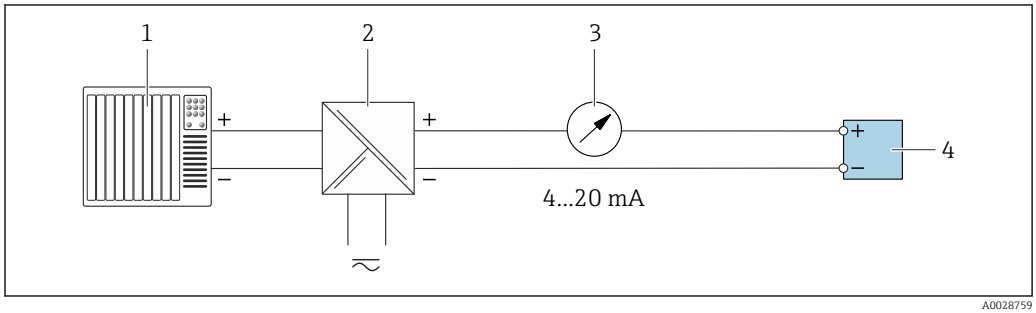

10 Connection example for 4-20 mA current output (passive)

1 *Automation system with current input (e.g. PLC)*
2 *Active barrier for power supply (e.g. RN221N)*
3 *Analog display unit: observe maximum load*
4 *Transmitter*

Pulse/frequency output

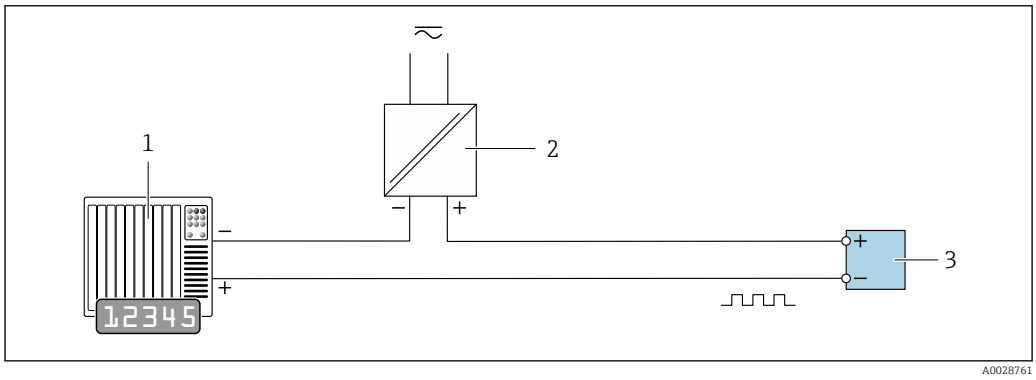

11 Connection example for pulse/frequency output (passive)

1 *Automation system with pulse/frequency input (e.g. PLC with 10 kΩ pull-up or pull-down resistor)*
2 *Power supply*
3 *Transmitter: observe input values → 184*

Switch output

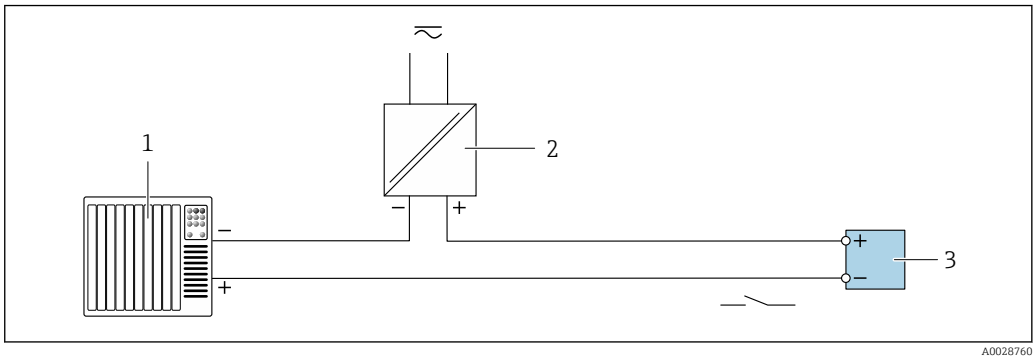

12 *Connection example for switch output (passive)*

1 *Automation system with switch input (e.g. PLC with a 10 kΩ pull-up or pull-down resistor)*
2 *Power supply*
3 *Transmitter: observe input values → 184*

Relay output

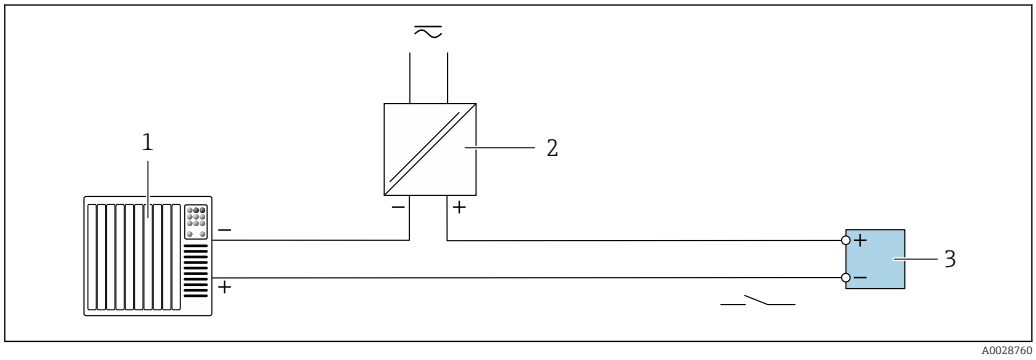

13 *Connection example for relay output (passive)*

1 *Automation system with relay input (e.g. PLC)*
2 *Power supply*
3 *Transmitter: observe input values → 185*

Current input

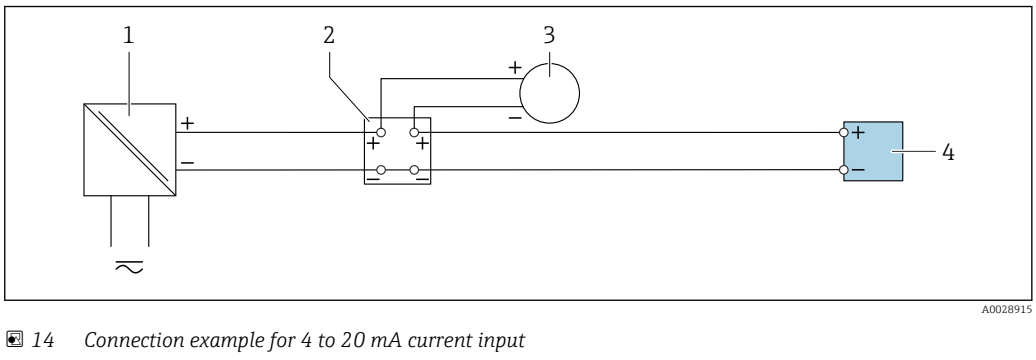

14 *Connection example for 4 to 20 mA current input*

1 *Power supply*
2 *Terminal box*
3 *External measuring device (to read in pressure or temperature, for instance)*
4 *Transmitter*

Status input

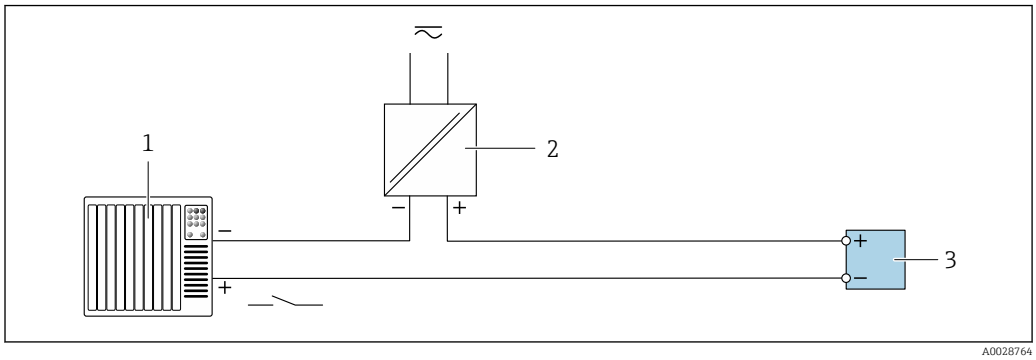

15 *Connection example for status input*

1 *Automation system with status output (e.g. PLC)*
2 *Power supply*
3 *Transmitter*

7.6 Hardware settings

7.6.1 Setting the device name

A measuring point can be quickly identified within a plant on the basis of the tag name. The factory-assigned device name can be changed using the DIP switches or the automation system.

Example: EH-Promag300-XXXX

EH	Endress+Hauser
Promag	Instrument family
300	Transmitter
XXXX	Serial number of the device

The device name currently used is displayed in Setup → Name of station.

Setting the device name using the DIP switches

The last part of the device name can be set using DIP switches 1-8. The address range is between 1 and 254 (factory setting: serial number of the device)

Overview of the DIP switches

DIP switch	Bit	Description
1	128	Configurable part of the device name
2	64	
3	32	
4	16	
5	8	
6	4	
7	2	
8	1	

Example: setting the device name EH-PROMAG300-065

DIP switch	ON/OFF	Bit	Device name
1	OFF	–	
2	ON	64	
3…7	OFF	–	
8	ON	1	
Serial number of the device:		065	EH-PROMAG300-065

Setting the device name

Risk of electric shock when opening the transmitter housing.
- ▶ Before opening the transmitter housing:
- ▶ Disconnect the device from the power supply.

The default IP address may **not** be activated → 📄 41.

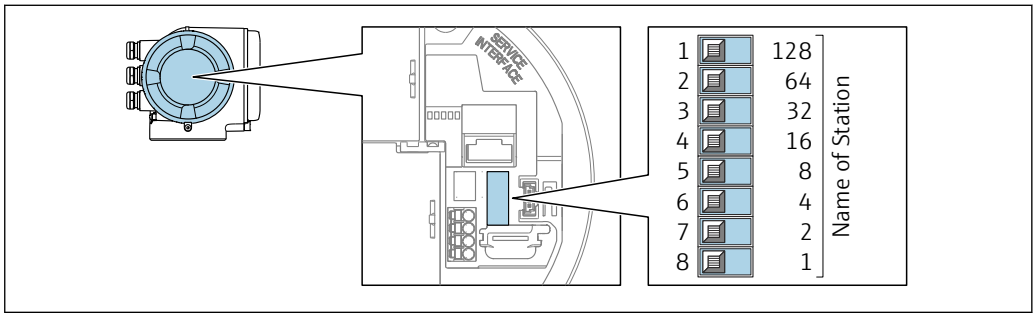

A0034498

1. Depending on the housing version, loosen the securing clamp or securing screw of the housing cover.
2. Depending on the housing version, unscrew or open the housing cover and disconnect the local display from the main electronics module where necessary .
3. Set the desired device name using the corresponding DIP switches on the I/O electronics module.
4. Reassemble the transmitter in the reverse order.
5. Reconnect the device to the power supply.
   ↳ The configured device address is used once the device is restarted.

Setting the device name via the automation system

DIP switches 1-8 must all be set to **OFF** (factory setting) or all be set to **ON** to be able to set the device name via the automation system.

The complete device name (name of station) can be changed individually via the automation system.

- The serial number used as part of the device name in the factory setting is not saved. It is not possible to reset the device name to the factory setting with the serial number. The device name is empty following the reset.
- When assigning the device name via the automation system: assign the device name in lower case letters.

7.6.2 Activating the default IP address

Activating the default IP address by DIP switch

Risk of electric shock when opening the transmitter housing.
- ▶ Before opening the transmitter housing:

▶ Disconnect the device from the power supply.

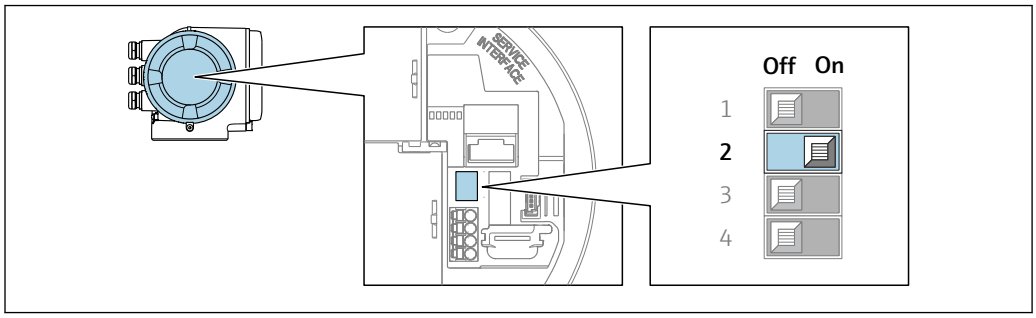

A0034499

1. Depending on the housing version, loosen the securing clamp or fixing screw of the housing cover.
2. Depending on the housing version, unscrew or open the housing cover and disconnect the local display from the main electronics module where necessary .
3. Set DIP switch no. 2 on the I/O electronics module from **OFF** → **ON**.
4. Reassemble the transmitter in the reverse order.
5. Reconnect the device to the power supply.
   ↳ The default IP address is used once the device is restarted.

7.7 Ensuring the degree of protection

The measuring device fulfills all the requirements for the degree of protection IP66/67, Type 4X enclosure.

To guarantee the degree of protection IP66/67, Type 4X enclosure, carry out the following steps after the electrical connection:

1. Check that the housing seals are clean and fitted correctly.
2. Dry, clean or replace the seals if necessary.
3. Tighten all housing screws and screw covers.
4. Firmly tighten the cable glands.
5. To ensure that moisture does not enter the cable entry:
   Route the cable so that it loops down before the cable entry ("water trap").
   ↳

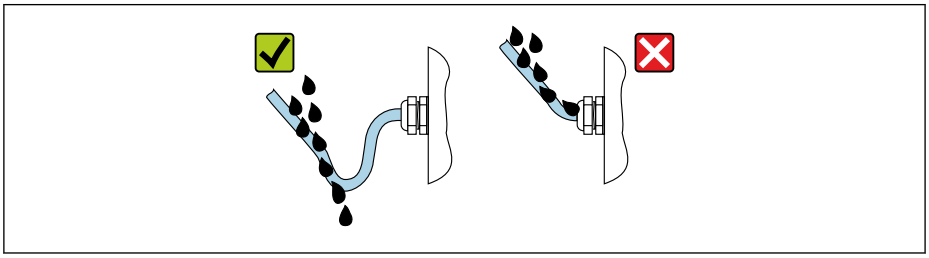

A0029278

6. The cable glands supplied do not provide any housing protection if they are not used. Therefore, they must be replaced by dummy plugs that match the housing protection.

7.8 Post-connection check

Are cables or the device undamaged (visual inspection)?	❑
Is the protective earthing established correctly?	
Do the cables used comply with the requirements ?	❑

Do the mounted cables have adequate strain relief?	❑
Are all cable glands installed, securely tightened and leak-tight? Cable run with "water trap" → 🗎 42?	❑
Is the terminal assignment correct ?	❑
If supply voltage is present, do values appear on the display module?	❑
Is the potential equalization established correctly ?	❑
Are dummy plugs inserted in unused cable entries and have transportation plugs been replaced with dummy plugs?	

8 Operation options

8.1 Overview of operation options

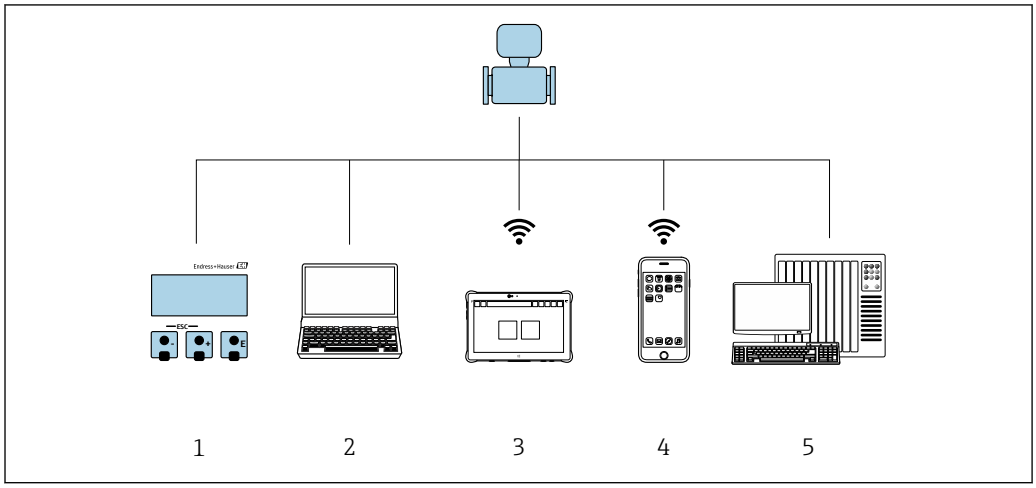

A0046226

1 *Local operation via display module*
2 *Computer with web browser (e.g. Internet Explorer) or with operating tool (e.g. FieldCare, SIMATIC PDM)*
3 *Field Xpert SMT70*
4 *Mobile handheld terminal*
5 *Control system (e.g. PLC)*

8.2 Structure and function of the operating menu

8.2.1 Structure of the operating menu

For an overview of the operating menu for experts: see the "Description of Device Parameters" document supplied with the device → 206

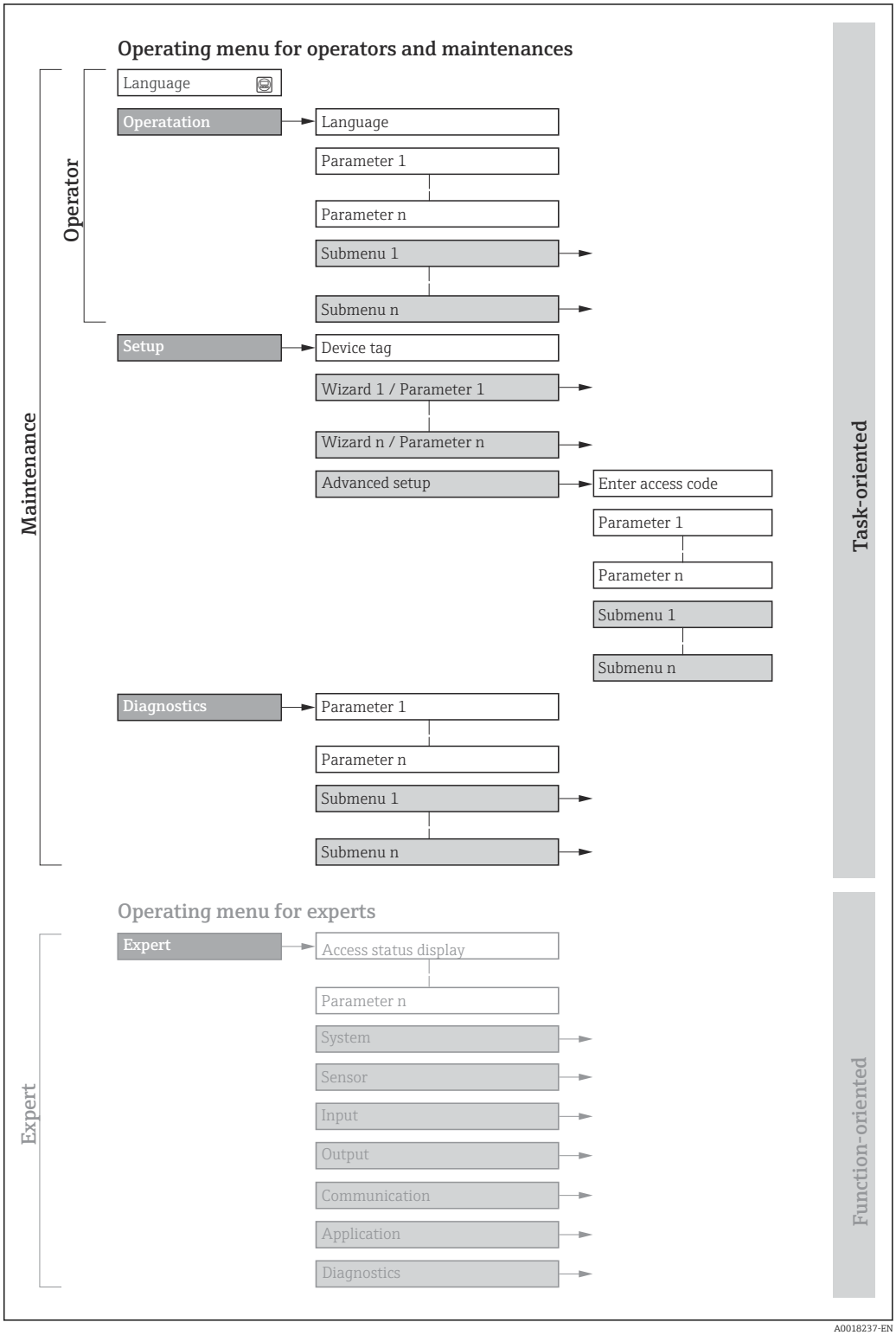

16 *Schematic structure of the operating menu*

8.2.2 Operating philosophy

The individual parts of the operating menu are assigned to certain user roles (operator, maintenance etc.). Each user role contains typical tasks within the device lifecycle.

Menu/parameter		User role and tasks	Content/meaning
Language	Task-oriented	**Role "Operator", "Maintenance"** Tasks during operation: ▪ Configuration of the operational display ▪ Reading measured values	▪ Defining the operating language ▪ Defining the Web server operating language ▪ Resetting and controlling totalizers
Operation			▪ Configuring the operational display (e.g. display format, display contrast) ▪ Resetting and controlling totalizers
Setup		**"Maintenance" role** Commissioning: ▪ Configuration of the measurement ▪ Configuration of the inputs and outputs ▪ Configuration of the communication interface	Wizards for quick commissioning: ▪ Configuration of the system units ▪ Display the I/O configuration ▪ Configuration of the inputs ▪ Configuration of the outputs ▪ Configuration of the operational display ▪ Configuration of the low flow cut off ▪ Configuration of empty pipe detection Advanced setup ▪ For more customized configuration of the measurement (adaptation to special measuring conditions) ▪ Configuration of totalizers ▪ Configuration of electrode cleaning (optional) ▪ Configuration of WLAN settings ▪ Administration (define access code, reset measuring device)
Diagnostics		**"Maintenance" role** Troubleshooting: ▪ Diagnostics and elimination of process and device errors ▪ Measured value simulation	Contains all parameters for error detection and analyzing process and device errors: ▪ Diagnostic list Contains up to 5 currently pending diagnostic messages. ▪ Event logbook Contains event messages that have occurred. ▪ Device information Contains information for identifying the device. ▪ Measured values Contains all current measured values. ▪ **Data logging** submenu with the "Extended HistoROM" order option Storage and visualization of measured values ▪ Heartbeat The functionality of the device is checked on demand and the verification results are documented. ▪ Simulation Is used to simulate measured values or output values.
Expert	Function-oriented	Tasks that require detailed knowledge of the function of the device: ▪ Commissioning measurements under difficult conditions ▪ Optimal adaptation of the measurement to difficult conditions ▪ Detailed configuration of the communication interface ▪ Error diagnostics in difficult cases	Contains all the parameters of the device and makes it possible to access these parameters directly using an access code. The structure of this menu is based on the function blocks of the device: ▪ System Contains all higher-level device parameters that do not pertain either to the measurement or to measured value communication. ▪ Sensor Configuration of the measurement. ▪ Input Configuration of the status input. ▪ Output Configuration of the analog current outputs as well as the pulse/frequency and switch output. ▪ Communication Configuration of the digital communication interface and the Web server. ▪ Application Configuration of the functions that go beyond the actual measurement (e.g. totalizer). ▪ Diagnostics Error detection and analysis of process and device errors and for device simulation and Heartbeat Technology.

8.3 Access to the operating menu via the local display

8.3.1 Operational display

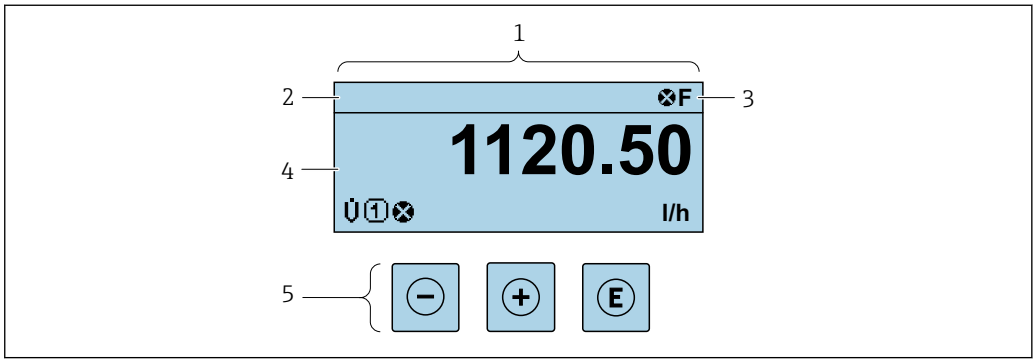

A0029346

1 *Operational display*
2 *Tag name*
3 *Status area*
4 *Display area for measured values (4-line)*
5 *Operating elements* → 📄 *53*

Status area

The following symbols appear in the status area of the operational display at the top right:
- Status signals→ 📄 141
  - **F**: Failure
  - **C**: Function check
  - **S**: Out of specification
  - **M**: Maintenance required
- Diagnostic behavior→ 📄 142
  - ⊗: Alarm
  - ⚠: Warning
- 🔒: Locking (the device is locked via the hardware)
- ⇆: Communication (communication via remote operation is active)

Display area

In the display area, each measured value is prefaced by certain symbol types for further description:

Measured variables

Symbol	Meaning
G	Conductivity
ṁ	Mass flow
Σ	Totalizer ℹ The measurement channel number indicates which of the three totalizers is displayed.
⊕	Status input

Measurement channel numbers

Symbol	Meaning
1 ... 4	Measurement channel 1 to 4
The measurement channel number is displayed only if more than one channel is present for the same measured variable type (e.g. totalizer 1 to 3).	

Diagnostic behavior

The diagnostic behavior pertains to a diagnostic event that is relevant to the displayed measured variable. For information on the symbols → 142

The number and display format of the measured values can be configured via the **Format display** parameter (→ 113).

8.3.2 Navigation view

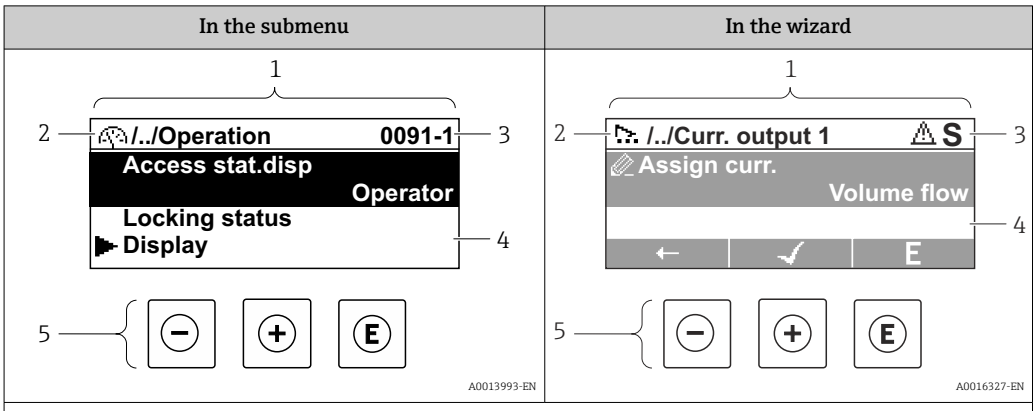

1 *Navigation view*
2 *Navigation path to current position*
3 *Status area*
4 *Display area for navigation*
5 *Operating elements* → 📄 *53*

Navigation path

The navigation path - displayed at the top left in the navigation view - consists of the following elements:

	In the submenu: Display symbol for menu In the wizard: Display symbol for wizard	Omission symbol for operating menu levels in between	Name of current Submenu Wizard Parameters
Examples		/ ../	**Display**
		/ ../	**Display**

For more information about the icons in the menu, refer to the "Display area" section → 📄 50

Status area

The following appears in the status area of the navigation view in the top right corner:
- In the submenu
  - The direct access code for the parameter you are navigating to (e.g. 0022-1)
  - If a diagnostic event is present, the diagnostic behavior and status signal
- In the wizard
  If a diagnostic event is present, the diagnostic behavior and status signal

- For information on the diagnostic behavior and status signal → 📄 141
- For information on the function and entry of the direct access code → 📄 55

Display area

Menus

Symbol	Meaning
	Operation Appears: ▪ In the menu next to the "Operation" selection ▪ At the left in the navigation path in the **Operation** menu
	Setup Appears: ▪ In the menu next to the "Setup" selection ▪ At the left in the navigation path in the **Setup** menu
	Diagnostics Appears: ▪ In the menu next to the "Diagnostics" selection ▪ At the left in the navigation path in the **Diagnostics** menu
	Expert Appears: ▪ In the menu next to the "Expert" selection ▪ At the left in the navigation path in the **Expert** menu

Submenus, wizards, parameters

Symbol	Meaning
	Submenu
	Wizard
	Parameters within a wizard No display symbol exists for parameters in submenus.

Locking

Symbol	Meaning
	Parameter locked When displayed in front of a parameter name, indicates that the parameter is locked. ▪ By a user-specific access code ▪ By the hardware write protection switch

Wizard operation

Symbol	Meaning
	Switches to the previous parameter.
	Confirms the parameter value and switches to the next parameter.
E	Opens the editing view of the parameter.

8.3.3 Editing view

Numeric editor

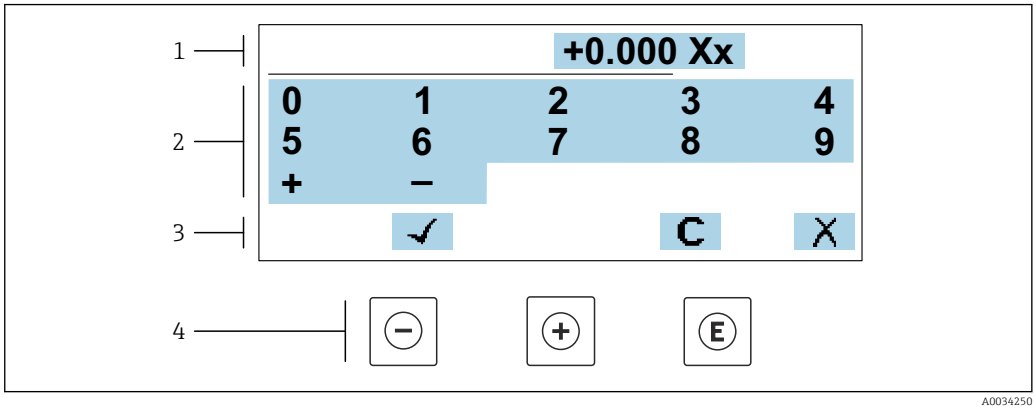

17 *For entering values in parameters (e.g. limit values)*

1 *Entry display area*
2 *Input screen*
3 *Confirm, delete or reject entry*
4 *Operating elements*

Text editor

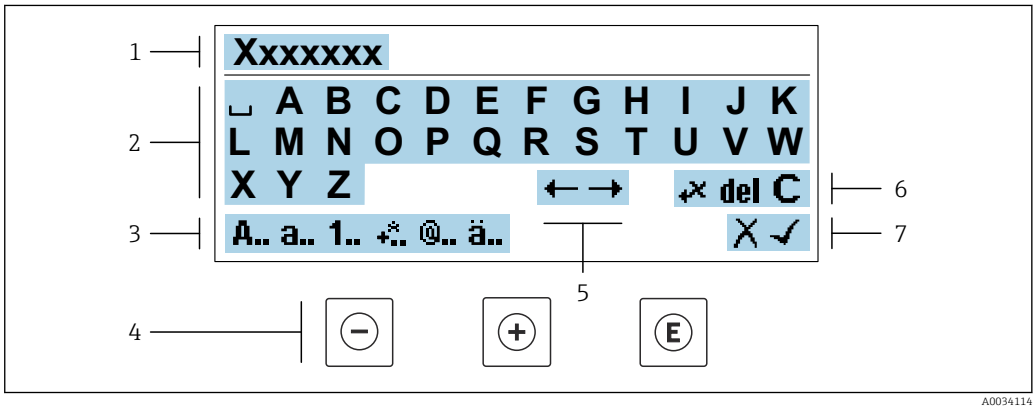

18 *For entering text in parameters (e.g. tag name)*

1 *Entry display area*
2 *Current input screen*
3 *Change input screen*
4 *Operating elements*
5 *Move entry position*
6 *Delete entry*
7 *Reject or confirm entry*

Using the operating elements in the editing view

Key	Meaning
⊖	**Minus key** Move the entry position to the left.
⊕	**Plus key** Move the entry position to the right.

Key	Meaning
Ⓔ	**Enter key** ▪ Pressing the key briefly confirms the selection. ▪ Pressing the key for 2 s confirms your entry.
⊖ + ⊕	**Escape key combination (press keys simultaneously)** Close the editing view without accepting a change.

Input screens

Symbol	Meaning
A..	Upper case
a..	Lower case
1..	Numbers
+..	Punctuation marks and special characters: = + – * / ² ³ ¼ ½ ¾ ( ) [ ] < > { }
@..	Punctuation marks and special characters: ' " ` ^ . , ; : ? ! % µ ° € $ £ ¥ § @ # / \ I ~ & _
ä..	Umlauts and accents

Controlling data entries

Symbol	Meaning
←→	Move entry position
✕	Reject entry
✓	Confirm entry
←✕	Delete character immediately to the left of the entry position
del	Delete character immediately to the right of the entry position
C	Clear all the characters entered

8.3.4 Operating elements

Key	Meaning
⊖	**Minus key** *In menu, submenu* Moves the selection bar upwards in a picklist. *With a wizard* Confirms the parameter value and goes to the previous parameter. *For text and numeric editor* Move the entry position to the left.
⊕	**Plus key** *In menu, submenu* Moves the selection bar downwards in a picklist. *With a wizard* Confirms the parameter value and goes to the next parameter. *For text and numeric editor* Move the entry position to the right.

E	**Enter key**
	For operational display
	Pressing the key briefly opens the operating menu.
	In menu, submenu
	▪ Pressing the key briefly:
	  ▪ Opens the selected menu, submenu or parameter.
	  ▪ Starts the wizard.
	  ▪ If help text is open, closes the help text of the parameter.
	▪ Pressing the key for 2 s in a parameter:
	  If present, opens the help text for the function of the parameter.
	With a wizard
	Opens the editing view of the parameter.
	For text and numeric editor
	▪ Pressing the key briefly confirms the selection.
	▪ Pressing the key for 2 s confirms your entry.

⊖ + ⊕	**Escape key combination (press keys simultaneously)**
	In menu, submenu
	▪ Pressing the key briefly:
	  ▪ Exits the current menu level and takes you to the next level up.
	  ▪ If help text is open, closes the help text of the parameter.
	▪ Pressing the key for 2 s returns you to the operational display ("home position").
	With a wizard
	Exits the wizard and takes you to the next level up.
	For text and numeric editor
	Closes the editing view without applying changes.

⊖ + E	**Minus/Enter key combination (press and hold down the keys simultaneously)**
	▪ If the keypad lock is enabled:
	  Pressing the key for 3 s disables the keypad lock.
	▪ If the keypad lock is not enabled:
	  Pressing the key for 3 s opens the context menu including the selection for activating the keypad lock.

8.3.5 Opening the context menu

Using the context menu, the user can call up the following menus quickly and directly from the operational display:

- Setup
- Data backup
- Simulation

Calling up and closing the context menu

The user is in the operational display.

1. Press the ⊟ and Ⓔ keys for longer than 3 seconds.
   ↳ The context menu opens.

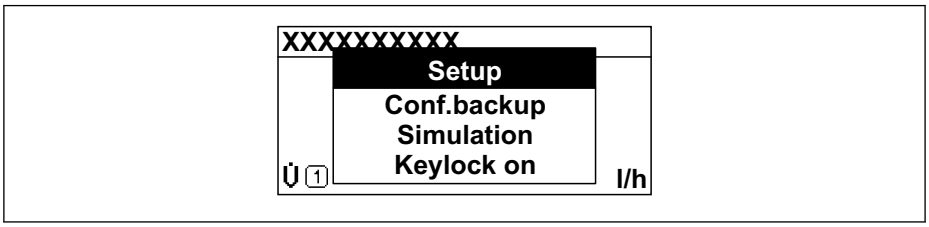

2. Press ⊟ + ⊞ simultaneously.
   ↳ The context menu is closed and the operational display appears.

Calling up the menu via the context menu

1. Open the context menu.
2. Press ⊞ to navigate to the desired menu.
3. Press Ⓔ to confirm the selection.
   ↳ The selected menu opens.

8.3.6 Navigating and selecting from list

Different operating elements are used to navigate through the operating menu. The navigation path is displayed on the left in the header. Icons are displayed in front of the individual menus. These icons are also shown in the header during navigation.

For an explanation of the navigation view with symbols and operating elements → 49

Example: Setting the number of displayed measured values to "2 values"

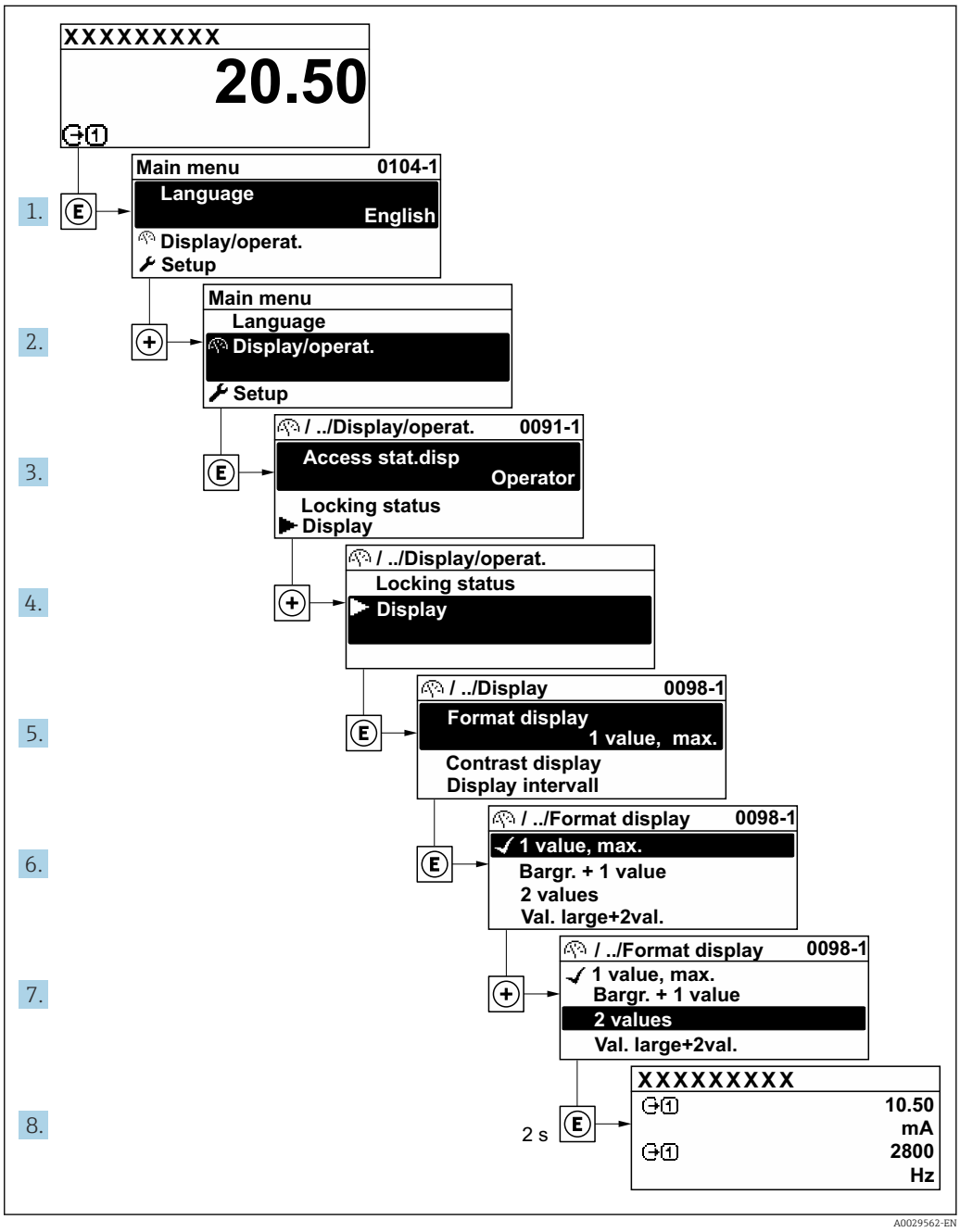

8.3.7 Calling the parameter directly

A parameter number is assigned to every parameter to be able to access a parameter directly via the onsite display. Entering this access code in the **Direct access** parameter calls up the desired parameter directly.

Navigation path
Expert → Direct access

The direct access code consists of a 5-digit number (at maximum) and the channel number, which identifies the channel of a process variable: e.g. 00914-2. In the navigation view, this appears on the right-hand side in the header of the selected parameter.

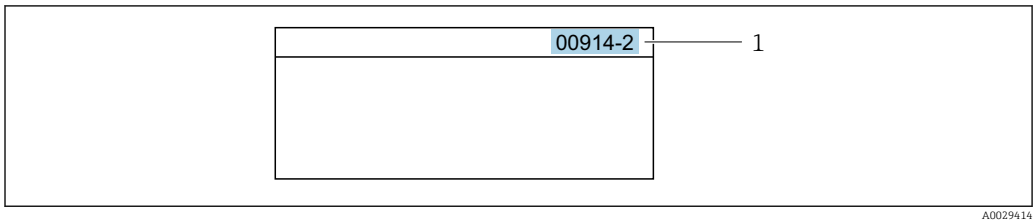

1 Direct access code

Note the following when entering the direct access code:
- The leading zeros in the direct access code do not have to be entered.
  Example: Enter **"914"** instead of **"00914"**
- If no channel number is entered, channel 1 is opened automatically.
  Example: Enter **00914** → **Assign process variable** parameter
- If a different channel is opened: Enter the direct access code with the corresponding channel number.
  Example: Enter **00914-2** → **Assign process variable** parameter

For the direct access codes of the individual parameters, see the "Description of Device Parameters" document for the device

8.3.8 Calling up help text

Help text is available for some parameters and can be called up from the navigation view. The help text provides a brief explanation of the parameter function and thereby supports swift and safe commissioning.

Calling up and closing the help text

The user is in the navigation view and the selection bar is on a parameter.

1. Press E for 2 s.
   ↳ The help text for the selected parameter opens.

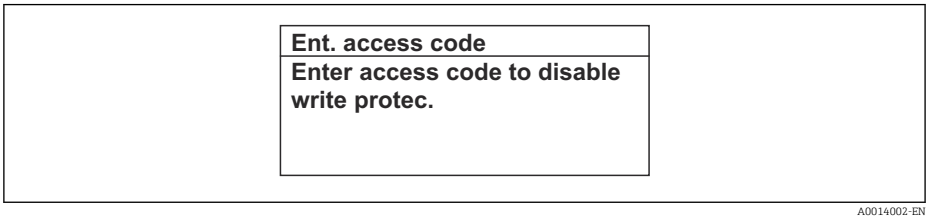

19 Example: Help text for parameter "Enter access code"

2. Press − + + simultaneously.
   ↳ The help text is closed.

8.3.9 Changing the parameters

Parameters can be changed via the numeric editor or text editor.
- Numeric editor: Change values in a parameter, e.g. specifications for limit values.
- Text editor: Enter text in a parameter, e.g. tag name.

A message is displayed if the value entered is outside the permitted value range.

Ent. access code
Invalid or out of range input value Min:0 Max:9999

A0014049-EN

For a description of the editing view - consisting of the text editor and numeric editor - with symbols → 51, for a description of the operating elements → 53

8.3.10 User roles and related access authorization

The two user roles "Operator" and "Maintenance" have different write access to the parameters if the customer defines a user-specific access code. This protects the device configuration via the local display from unauthorized access → 124.

Defining access authorization for user roles

An access code is not yet defined when the device is delivered from the factory. Access authorization (read and write access) to the device is not restricted and corresponds to the "Maintenance" user role.

- Define the access code.
  - The "Operator" user role is redefined in addition to the "Maintenance" user role. Access authorization differs for the two user roles.

Access authorization to parameters: "Maintenance" user role

Access code status	Read access	Write access
An access code has not yet been defined (factory setting).	✔	✔
After an access code has been defined.	✔	✔ [1]

1) The user only has write access after entering the access code.

Access authorization to parameters: "Operator" user role

Access code status	Read access	Write access
After an access code has been defined.	✔	– [1]

1) Despite the defined access code, certain parameters can always be modified and thus are excluded from the write protection, as they do not affect the measurement. Refer to the "Write protection via access code" section

The user role with which the user is currently logged on is indicated by the **Access status** parameter. Navigation path: Operation → Access status

8.3.11 Disabling write protection via access code

If the 🔒-symbol appears on the local display in front of a parameter, the parameter is write-protected by a user-specific access code and its value cannot be changed at the moment using local operation → 124.

Parameter write protection via local operation can be disabled by entering the user-specific access code in the **Enter access code** parameter (→ 110) via the respective access option.

1. After you press E, the input prompt for the access code appears.

2. Enter the access code.
   ↳ The 🔒-symbol in front of the parameters disappears; all previously write-protected parameters are now re-enabled.

8.3.12 Enabling and disabling the keypad lock

The keypad lock makes it possible to block access to the entire operating menu via local operation. As a result, it is no longer possible to navigate through the operating menu or change the values of individual parameters. Users can only read the measured values on the operational display.

The keypad lock is switched on and off via the context menu.

Switching on the keypad lock

The keypad lock is switched on automatically:
- If the device has not been operated via the display for > 1 minute.
- Each time the device is restarted.

To activate the keylock manually:

1. The device is in the measured value display.
   Press the ⊟ and Ⓔ keys for 3 seconds.
   ↳ A context menu appears.
2. In the context menu select the **Keylock on** option.
   ↳ The keypad lock is switched on.

If the user attempts to access the operating menu while the keypad lock is active, the **Keylock on** message appears.

Switching off the keypad lock

▶ The keypad lock is switched on.
Press the ⊟ and Ⓔ keys for 3 seconds.
↳ The keypad lock is switched off.

8.4 Access to operating menu via Web browser

8.4.1 PROFINET with Ethernet-APL

Device use	**Device connection to an APL field switch** The device may only be operated according to the following APL port classifications: ▪ If used in hazardous areas: SLAA or SLAC [1)] ▪ If used in non-hazardous areas: SLAX ▪ Connection values of APL field switch (for example corresponds to APL port classification SPCC or SPAA): ▪ Maximum input voltage: 15 V_{DC} ▪ Minimum output values: 0.54 W **Device connection to an SPE switch** If used in non-hazardous areas: suitable SPE switch SPE switch prerequisite: ▪ Support of 10BASE-T1L standard ▪ Support of PoDL power class 10, 11 or 12 ▪ Detection of SPE field devices without integrated PoDL module Connection values of SPE switch: ▪ Maximum input voltage: 30 V_{DC} ▪ Minimum output values: 1.85 W
PROFINET	According to IEC 61158 and IEC 61784
Ethernet-APL	According to IEEE 802.3cg, APL port profile specification v1.0, galvanically isolated
Data transfer	10 Mbit/s
Current consumption	**Transmitter** Max. 55.56 mA
Permitted supply voltage	▪ Ex: 9 to 15 V ▪ Non-Ex: 9 to 32 V
Network connection	With integrated reverse polarity protection

1) For more information on using the device in the hazardous area, see the Ex-specific Safety Instructions

8.4.2 Prerequisites

Computer hardware

Hardware	**Interface**	
	CDI-RJ45	**WLAN**
Interface	The computer must have an RJ45 interface. [1)]	The operating unit must have a WLAN interface.
Connection	Standard Ethernet cable	Connection via Wireless LAN.
Screen	Recommended size: ≥12" (depends on the screen resolution)	

1) Recommended cable: CAT5e, CAT6 or CAT7, with shielded connector (e.g. brand YAMAICHI ; Part No Y-ConProfixPlug63 / Prod. ID: 82-006660)

Computer software

Software	Interface	
	CDI-RJ45	WLAN
Recommended operating systems	▪ Microsoft Windows 8 or higher. ▪ Mobile operating systems: ▪ iOS ▪ Android Microsoft Windows XP and Windows 7 is supported.	
Web browsers supported	▪ Microsoft Internet Explorer 8 or higher ▪ Microsoft Edge ▪ Mozilla Firefox ▪ Google Chrome ▪ Safari	

Computer settings

Settings	Interface	
	CDI-RJ45	WLAN
User rights	Appropriate user rights (e.g. administrator rights) for TCP/IP and proxy server settings are necessary (for adjusting the IP address, subnet mask etc.).	
Proxy server settings of the web browser	The web browser setting *Use proxy server for LAN* must be **disabled** .	
JavaScript	JavaScript must be enabled. If JavaScript cannot be enabled: Enter http://192.168.1.212/servlet/basic.html in the address bar of the web browser. A fully functional but simplified version of the operating menu structure starts in the web browser. When installing a new firmware version: To enable correct data display, clear the temporary memory (cache) under **Internet options** in the web browser.	
Network connections	Only the active network connections to the measuring device should be used.	
	Switch off all other network connections such as WLAN.	Switch off all other network connections.

In the event of connection problems: → 138

Measuring device: Via CDI-RJ45 service interface

Device	CDI-RJ45 service interface
Measuring device	The measuring device has an RJ45 interface.
Web server	Web server must be enabled; factory setting: ON For information on enabling the Web server → 65

Measuring device: via WLAN interface

Device	WLAN interface
Measuring device	The measuring device has a WLAN antenna: ▪ Transmitter with integrated WLAN antenna ▪ Transmitter with external WLAN antenna
Web server	Web server and WLAN must be enabled; factory setting: ON For information on enabling the Web server → 65

8.4.3 Establishing a connection

Via service interface (CDI-RJ45)

Preparing the measuring device

1. Depending on the housing version:
   Loosen the securing clamp or fixing screw of the housing cover.
2. Depending on the housing version:
   Unscrew or open the housing cover.
3. Connect the computer to the RJ45 plug via the standard Ethernet cable .

Configuring the Internet protocol of the computer

The following information refers to the default Ethernet settings of the device.

IP address of the device: 192.168.1.212 (factory setting)

The IP address can be assigned to the measuring device in a variety of ways:
- Software addressing:
  The IP address is entered via the **IP address** parameter (→ 📄 87) .
- DIP switch for "Default IP address":
  To establish the network connection via the service interface (CDI-RJ45): the fixed IP address 192.168.1.212 is used .

To establish a network connection via the service interface (CDI-RJ45): set the "Default IP address" DIP switch to **ON**. The measuring device then has the fixed IP address: 192.168.1.212. The fixed IP address 192.168.1.212 can now be used to establish the connection to the network.

1. Via DIP switch 2, activate the default IP address 192.168.1.212: .
2. Switch on the measuring device.
3. Connect the computer to the RJ45 plug via the standard Ethernet cable → 📄 67.
4. If a 2nd network card is not used, close all the applications on the notebook.
   ↳ Applications requiring Internet or a network, such as e-mail, SAP applications, Internet or Windows Explorer.
5. Close any open Internet browsers.
6. Configure the properties of the Internet protocol (TCP/IP) as defined in the table:

IP address	192.168.1.XXX; for XXX all numerical sequences except: 0, 212 and 255 → e.g. 192.168.1.213
Subnet mask	255.255.255.0
Default gateway	192.168.1.212 or leave cells empty

Via WLAN interface

Configuring the Internet protocol of the mobile terminal

NOTICE

If the WLAN connection is lost during the configuration, settings made may be lost.
- Make sure that the WLAN connection is not disconnected while configuring the device.

NOTICE

Note the following to avoid a network conflict:

- Avoid accessing the measuring device simultaneously from the same mobile terminal via the service interface (CDI-RJ45) and the WLAN interface.
- Only activate one service interface (CDI-RJ45 or WLAN interface).
- If simultaneous communication is necessary: configure different IP address ranges, e.g. 192.168.0.1 (WLAN interface) and 192.168.1.212 (CDI-RJ45 service interface).

Preparing the mobile terminal

- Enable WLAN on the mobile terminal.

Establishing a WLAN connection from the mobile terminal to the measuring device

1. In the WLAN settings of the mobile terminal:
   Select the measuring device using the SSID (e.g. EH_Promag_300_A802000).
2. If necessary, select the WPA2 encryption method.
3. Enter the password:
   Serial number of the measuring device ex-works (e.g. L100A802000).
   ↳ The LED on the display module flashes. It is now possible to operate the measuring device with the web browser, FieldCare or DeviceCare.

The serial number can be found on the nameplate.

To ensure the safe and swift assignment of the WLAN network to the measuring point, it is advisable to change the SSID name. It should be possible to clearly assign the new SSID name to the measuring point (e.g. tag name) because it is displayed as the WLAN network.

Terminating the WLAN connection

- After configuring the device:
  Terminate the WLAN connection between the mobile terminal and measuring device.

Starting the Web browser

1. Start the Web browser on the computer.

2. Enter the IP address of the web server in the address line of the web browser: 192.168.1.212
   ↳ The login page appears.

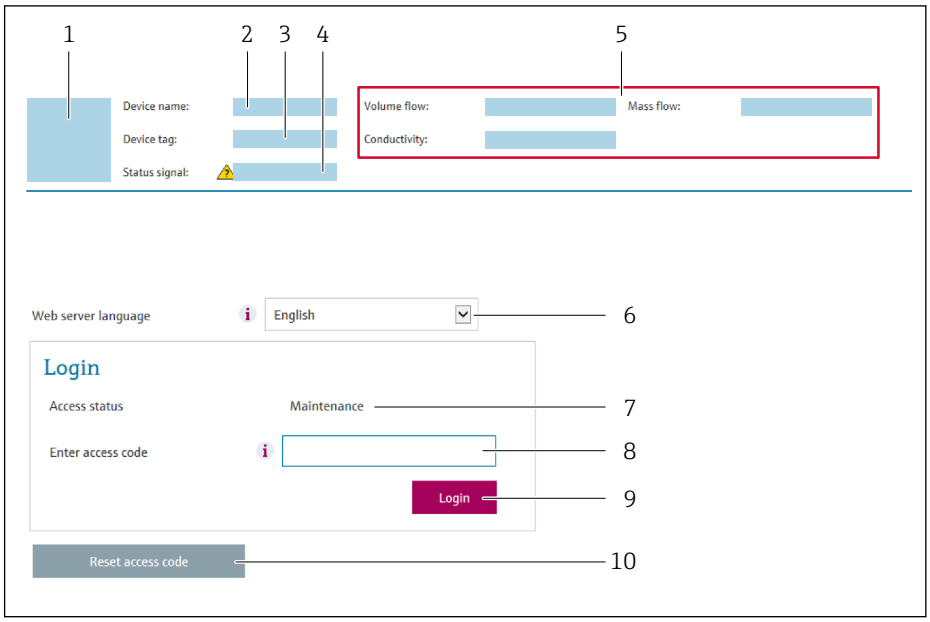

A0029417

1 *Picture of device*
2 *Device name*
3 *Device tag*
4 *Status signal*
5 *Current measured values*
6 *Operating language*
7 *User role*
8 *Access code*
9 *Login*
10 *Reset access code (→ 121)*

If a login page does not appear, or if the page is incomplete → 138

8.4.4 Logging on

1. Select the preferred operating language for the Web browser.
2. Enter the user-specific access code.
3. Press **OK** to confirm your entry.

Access code	0000 (factory setting); can be changed by customer

If no action is performed for 10 minutes, the Web browser automatically returns to the login page.

8.4.5 User interface

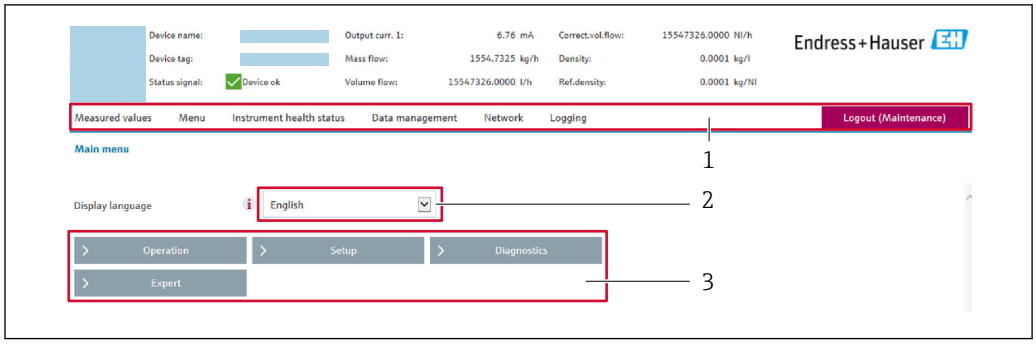

A0029418

1 *Function row*
2 *Local display language*
3 *Navigation area*

Header

The following information appears in the header:
- Device name
- Device tag
- Device status with status signal → 📄 144
- Current measured values

Function row

Functions	Meaning
Measured values	Displays the measured values of the device
Menu	▪ Access to the operating menu from the measuring device ▪ The structure of the operating menu is the same as for the local display Detailed information on the structure of the operating menu: see the Description of Device Parameters
Device status	Displays the diagnostic messages currently pending, listed in order of priority

Data management	Data exchange between computer and measuring device:
	▪ Device configuration:
	  ▪ Load settings from the device (XML format, save configuration)
	  ▪ Save settings to the device (XML format, restore configuration)
	▪ Logbook - Export Event logbook (.csv file)
	▪ Documents - Export documents:
	  ▪ Export backup data record (.csv file, create documentation of the measuring point configuration)
	  ▪ Verification report (PDF file, only available with the "Heartbeat Verification" application package)
	▪ Firmware update - Flashing a firmware version

Network	Configuration and checking of all the parameters required for establishing the connection to the measuring device: ▪ Network settings (e.g. IP address, MAC address) ▪ Device information (e.g. serial number, firmware version)
Logout	End the operation and call up the login page

Navigation area

The menus, the associated submenus and parameters can be selected in the navigation area.

Working area

Depending on the selected function and the related submenus, various actions can be performed in this area:
- Configuring parameters
- Reading measured values
- Calling up help text
- Starting an upload/download

8.4.6 Disabling the Web server

The Web server of the measuring device can be switched on and off as required using the **Web server functionality** parameter.

Navigation

"Expert" menu → Communication → Web server

Parameter overview with brief description

Parameter	Description	Selection	Factory setting
Web server functionality	Switch the Web server on and off.	▪ Off ▪ HTML Off ▪ On	On

Function scope of the "Web server functionality" parameter

Option	Description
Off	▪ The Web server is completely disabled. ▪ Port 80 is locked.
HTML Off	The HTML version of the Web server is not available.
On	▪ The complete Web server functionality is available. ▪ JavaScript is used. ▪ The password is transferred in an encrypted state. ▪ Any change to the password is also transferred in an encrypted state.

Enabling the Web server

If the Web server is disabled it can only be re-enabled with the **Web server functionality** parameter via the following operating options:
- Via local display
- Via Bedientool "FieldCare"
- Via "DeviceCare" operating tool

8.4.7 Logging out

Before logging out, perform a data backup via the **Data management** function (upload configuration from device) if necessary.

1. Select the **Logout** entry in the function row.
   ↳ The home page with the Login box appears.
2. Close the Web browser.

3. If no longer needed:
   Reset the modified properties of the Internet protocol (TCP/IP) → 📄 61.

If communication with the web server was established via the default IP address 192.168.1.212, DIP switch no. 10 must be reset (from **ON** → **OFF**). Afterwards, the IP address of the device is active again for network communication.

8.5 Access to the operating menu via the operating tool

The structure of the operating menu in the operating tools is the same as for operation via the local display.

8.5.1 Connecting the operating tool

Via APL network

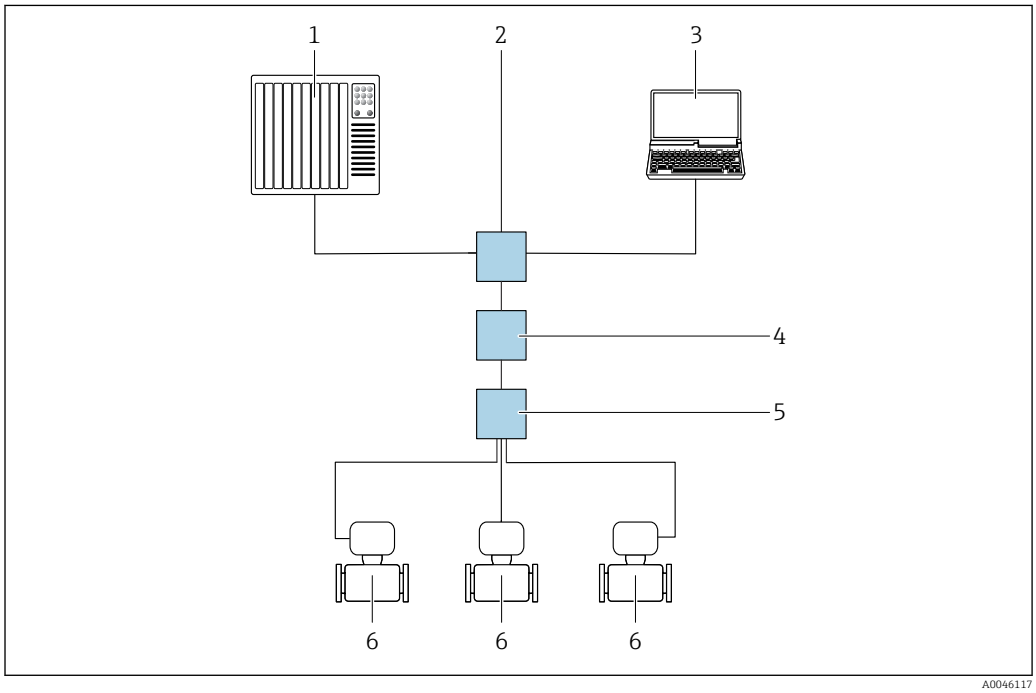

20 Options for remote operation via APL network

1 *Automation system, e.g. Simatic S7 (Siemens)*
2 *Ethernet switch, e.g. Scalance X204 (Siemens)*
3 *Computer with Web browser (e.g. Internet Explorer) for access to integrated Web server or computer with operating tool (e.g. FieldCare, DeviceCare with PROFINET COM DTM or SIMATIC PDM with FDI-Package)*
4 *APL power switch (optional)*
5 *APL field switch*
6 *Measuring device*

Service interface

Via service interface (CDI-RJ45)

A point-to-point connection can be established via onsite device configuration. With the housing open, the connection is established directly via the service interface (CDI-RJ45) of the device.

An adapter for the RJ45 to the M12 plug is optionally available for the non-hazardous area:
Order code for "Accessories", option **NB**: "Adapter RJ45 M12 (service interface)"

The adapter connects the service interface (CDI-RJ45) to an M12 plug mounted in the cable entry. The connection to the service interface can be established via an M12 plug without opening the device.

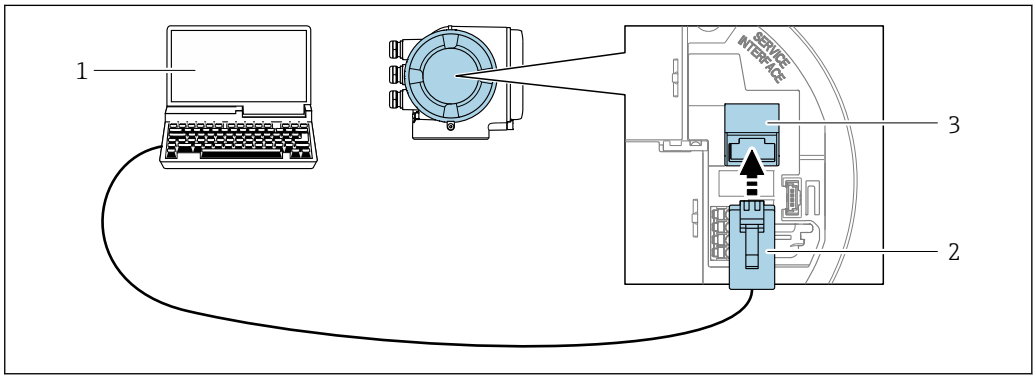

21 Connection via service interface (CDI-RJ45)

1 *Computer with Web browser (e.g. Microsoft Internet Explorer, Microsoft Edge) for accessing the integrated Web server or with "FieldCare", "DeviceCare" operating tool with COM DTM "CDI Communication TCP/IP"*
2 *Standard Ethernet connecting cable with RJ45 plug*
3 *Service interface (CDI-RJ45) of the measuring device with access to the integrated Web server*

Via WLAN interface

The optional WLAN interface is available on the following device version:
Order code for "Display; operation", option G "4-line, illuminated; touch control + WLAN"

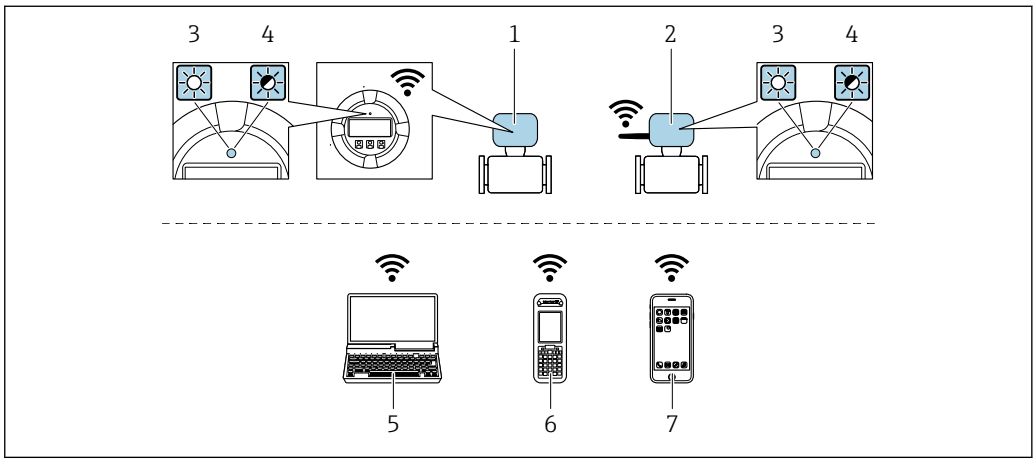

1 *Transmitter with integrated WLAN antenna*
2 *Transmitter with external WLAN antenna*
3 *LED lit constantly: WLAN reception is enabled on measuring device*
4 *LED flashing: WLAN connection established between operating unit and measuring device*
5 *Computer with WLAN interface and Web browser (e.g. Microsoft Internet Explorer, Microsoft Edge) for accessing the integrated device Web server or with operating tool (e.g. FieldCare, DeviceCare)*
6 *Mobile handheld terminal with WLAN interface and Web browser (e.g. Microsoft Internet Explorer, Microsoft Edge) for accessing the integrated device Web server or operating tool (e.g. FieldCare, DeviceCare)*
7 *Smart phone or tablet (e.g. Field Xpert SMT70)*

Function	WLAN: IEEE 802.11 b/g (2.4 GHz)
Encryption	WPA2-PSK AES-128 (in accordance with IEEE 802.11i)
Configurable WLAN channels	1 to 11
Degree of protection	IP67
Available antennas	▪ Internal antenna ▪ External antenna (optional) In the event of poor transmission/reception conditions at the place of installation. Only 1 antenna is active at any one time!
Range	▪ Internal antenna: typically 10 m (32 ft) ▪ External antenna: typically 50 m (164 ft)
Materials (external antenna)	▪ Antenna: ASA plastic (acrylonitrile styrene acrylate) and nickel-plated brass ▪ Adapter: Stainless steel and nickel-plated brass ▪ Cable: Polyethylene ▪ Plug: Nickel-plated brass ▪ Angle bracket: Stainless steel

Configuring the Internet protocol of the mobile terminal

NOTICE

If the WLAN connection is lost during the configuration, settings made may be lost.

- Make sure that the WLAN connection is not disconnected while configuring the device.

NOTICE

Note the following to avoid a network conflict:

- Avoid accessing the measuring device simultaneously from the same mobile terminal via the service interface (CDI-RJ45) and the WLAN interface.
- Only activate one service interface (CDI-RJ45 or WLAN interface).
- If simultaneous communication is necessary: configure different IP address ranges, e.g. 192.168.0.1 (WLAN interface) and 192.168.1.212 (CDI-RJ45 service interface).

Preparing the mobile terminal

- Enable WLAN on the mobile terminal.

Establishing a WLAN connection from the mobile terminal to the measuring device

1. In the WLAN settings of the mobile terminal:
   Select the measuring device using the SSID (e.g. EH_Promag_300_A802000).
2. If necessary, select the WPA2 encryption method.
3. Enter the password:
   Serial number of the measuring device ex-works (e.g. L100A802000).
   ↳ The LED on the display module flashes. It is now possible to operate the measuring device with the web browser, FieldCare or DeviceCare.

The serial number can be found on the nameplate.

To ensure the safe and swift assignment of the WLAN network to the measuring point, it is advisable to change the SSID name. It should be possible to clearly assign the new SSID name to the measuring point (e.g. tag name) because it is displayed as the WLAN network.

Terminating the WLAN connection

- After configuring the device:
  Terminate the WLAN connection between the mobile terminal and measuring device.

8.5.2 FieldCare

Function scope

FDT (Field Device Technology)-based plant asset management tool from Endress+Hauser. It can configure all smart field units in a system and helps you manage them. By using the status information, it is also a simple but effective way of checking their status and condition.

Access is via:
- CDI-RJ45 service interface → 67
- WLAN interface → 67

Typical functions:
- Configuring parameters of transmitters
- Loading and saving device data (upload/download)
- Documentation of the measuring point
- Visualization of the measured value memory (line recorder) and event logbook

For additional information about FieldCare, see Operating Instructions BA00027S and BA00059S

Source for device description files

See information → 72

Establishing a connection

1. Start FieldCare and launch the project.
2. In the network: Add a device.
   ↳ The **Add device** window opens.
3. Select the **CDI Communication TCP/IP** option from the list and press **OK** to confirm.
4. Right-click **CDI Communication TCP/IP** and select the **Add device** option in the context menu that opens.
5. Select the desired device from the list and press **OK** to confirm.
   ↳ The **CDI Communication TCP/IP (Configuration)** window opens.
6. Enter the device address in the **IP address** field: 192.168.1.212 and press **Enter** to confirm.
7. Establish the online connection to the device.

For additional information, see Operating Instructions BA00027S and BA00059S

User interface

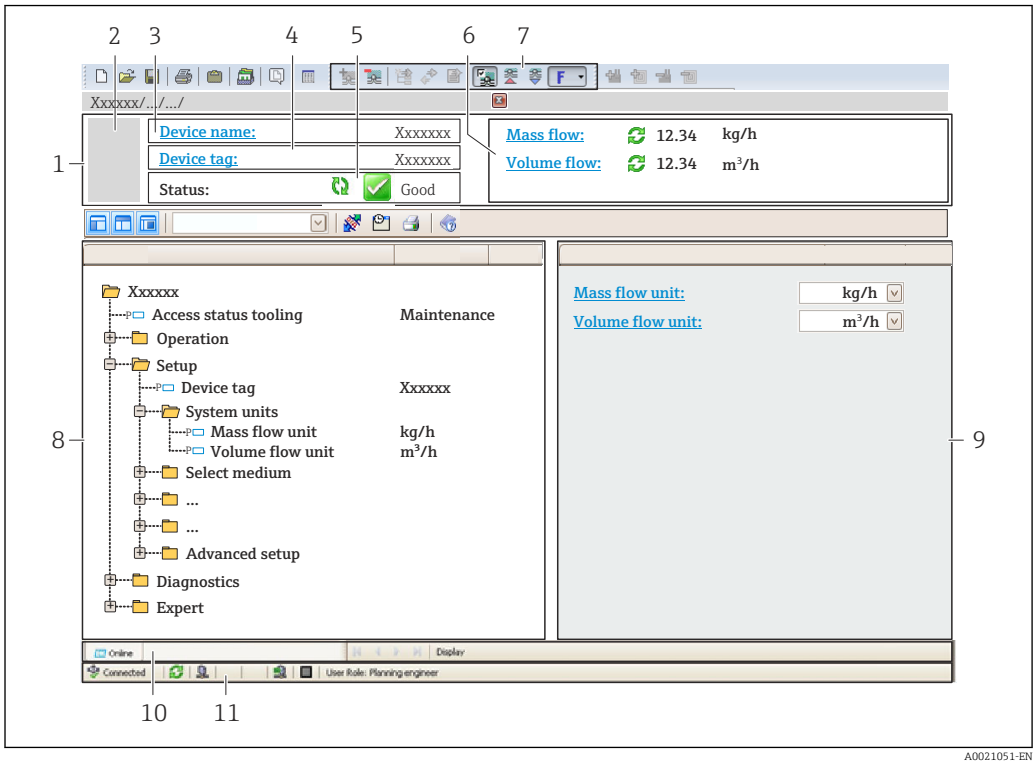

A0021051-EN

1 *Header*
2 *Picture of device*
3 *Device name*
4 *Tag name*
5 *Status area with status signal* → 📄 *144*
6 *Display area for current measured values*
7 *Edit toolbar with additional functions such as save/load, event list and create documentation*
8 *Navigation area with operating menu structure*
9 *Working area*
10 *Range of action*
11 *Status area*

8.5.3 DeviceCare

Function scope

Tool to connect and configure Endress+Hauser field devices.

The fastest way to configure Endress+Hauser field devices is with the dedicated "DeviceCare" tool. Together with the device type managers (DTMs) it presents a convenient, comprehensive solution.

For details, see Innovation Brochure IN01047S

Source for device description files

See information → 📄 72

8.5.4 SIMATIC PDM

Function scope

SIMATIC PDM is a standardized, vendor-independent program from Siemens for the operation, configuration, maintenance and diagnosis of intelligent field devices via PROFINET protocol.

Source for device description files

See information → 📄 72

9 System integration

9.1 Overview of device description files

9.1.1 Current version data for the device

Firmware version	01.00.zz	▪ On the title page of the Operating Instructions ▪ On the transmitter nameplate ▪ Firmware version Diagnostics → Device information → Firmware version
Manufacturer	17	Manufacturer Expert → Communication → Physical block → Manufacturer
Device ID	0xA43C	–
Device type ID	Promag 300	Device type Expert → Communication → Physical block → Device type
Device revision	1	–
PROFINET with Ethernet-APL version	2.43	Version of the PROFINET specification

For an overview of the various firmware versions for the device → 📖 172

9.1.2 Operating tools

The suitable device description file for the individual operating tools is listed in the table below, along with information on where the file can be acquired.

FieldCare	▪ www.endress.com → Download Area ▪ USB stick (contact Endress+Hauser) ▪ DVD (contact Endress+Hauser)
DeviceCare	▪ www.endress.com → Download Area ▪ CD-ROM (contact Endress+Hauser) ▪ DVD (contact Endress+Hauser)
SIMATIC PDM (Siemens)	www.endress.com → Download Area

9.2 Device master file (GSD)

In order to integrate field devices into a bus system, PROFINET needs a description of the device parameters, such as output data, input data, data format and data volume.

These data are available in the device master file (GSD) which is provided to the automation system when the communication system is commissioned. In addition device bit maps, which appear as icons in the network structure, can also be integrated.

The device master file (GSD) is in XML format, and the file is created in the GSDML description markup language.

With the PA Profile 4.02 device master file (GSD) it is possible to exchange field devices made by different manufacturers without having to reconfigure.

The use of two different device master files (GSDs) is possible: the manufacturer-specific GSD and the PA-Profile GSD.

9.2.1 File name of the manufacturer-specific device master file (GSD)

Example of the name of a device master file:

GSDML-V2.43-EH-PROMAG_300_500_APL_yyyymmdd.xml

GSDML	Description language
V2.43	Version of the PROFINET specification
EH	Endress+Hauser
PROMAG	Instrument family
300_500_APL	Transmitter
yyyymmdd	Date of issue (yyyy: year, mm: month, dd: day)
.xml	File name extension (XML file)

9.2.2 File name of the PA Profile device master file (GSD)

Example of the name of a PA Profile device master file:

GSDML-V2.43-PA_Profile_V4.02-B332-FLOW_EL_MAGNETIC-yyyymmdd.xml

GSDML	Description language
V2.43	Version of the PROFINET specification
PA_Profile_V4.02	Version of the PA Profile specification
B332	PA Profile device identification
FLOW	Product family
EL_MAGNETIC	Flow measuring principle
yyyymmdd	Date of issue (yyyy: year, mm: month, dd: day)
.xml	File name extension (XML file)

API	Supported modules	Slot	Input and output variables
0x9700	Analog input	1	Volume flow
	Totalizer	2	Totalizer value: volume/volume Totalizer control

Source for device master files (GSD):

Manufacturer-specific GSD:	www.endress.com → Download Area
PA Profile GSD:	https://www.profibus.com/products/gsd-files/gsd-library-profile-for-process-control-devices-version-40 → Download Area

9.3 Cyclic data transmission

9.3.1 Overview of the modules

The following graphic shows which modules are available to the device for cyclic data transfer. Cyclic data transfer is performed with an automation system.

Measuring device			Sub-slot	Direction Data flow	Control system
API	Modules	Slot			
0x9700	Analog Input 1 (Volume flow)	1	1	→	PROFINET
	Analog Input 2	20	1	→	
	Analog Input 3	21	1	→	
	Analog Input 4	22	1	→	
	Analog Input 5	23	1	→	
	Analog Input 6	24	1	→	
	Analog Input 7	25	1	→	
	Analog Input 8	26	1	→	
	Totalizer 1 (Volume)	2	1	→ ←	
	Totalizer 2	70	1	→ ←	
	Totalizer 3	71	1	→ ←	
	Binary Input 1 (Heartbeat)	80	1	→	
	Binary Input 2	81	1	→	
	Analog Output 1 (Temperature)	160	1	←	
	Analog Output 2 (Density)	161	1	←	
	Binary Input 1 (Heartbeat)	210	1	←	
	Binary Output 2	211	1	←	

9.3.2 Description of the modules

The data structure is described from the perspective of the automation system:
- Input data: Are sent from the measuring device to the automation system.
- Output data: Are sent from the automation system to the measuring device.

Analog Input module

Transmit input variables from the measuring device to the automation system.

Analog Input modules cyclically transmit the selected input variables, including the status, from the measuring device to the automation system. The input variable is depicted in the first four bytes in the form of a floating point number as per the IEEE 754 standard. The fifth byte contains standardized status information pertaining to the input variable.

Selection: input variable

Slot	Sub-slot	Input variables
1	1	Volume flow
20 to 26	1	▪ Volume flow ▪ Mass flow ▪ Corrected volume flow ▪ Flow velocity ▪ Temperature ▪ Electronics temperature ▪ Buildup index ▪ Current input 1 ▪ Current input 2 ▪ Current input 3 **Additional input variables with the Heartbeat Verification application package** ▪ Noise ▪ Coil current rise time ▪ Reference electrode potential against PE ▪ HBSI **Additional input variables with the Conductivity application package** ▪ Conductivity ▪ Corrected conductivity

Data structure

Output data of Analog Output

Byte 1	Byte 2	Byte 3	Byte 4	Byte 5
Measured value: floating point number (IEEE 754)				Status [1)]

1) Status coding → 🗎 80

Binary Input module

Transmit binary input variables from the measuring device to the automation system.

Binary input variables are used by the measuring device to transmit the state of device functions to the automation system.

Binary Input modules cyclically transmit discrete input variables, including the status, from the measuring device to the automation system. The discrete input variable is depicted in the first byte. The second byte contains standardized status information pertaining to the input variable.

Selection: Device function Binary Input Slot 80

Slot	Sub-slot	Bit	Device function	Status (meaning)
80	1	0	Verification has not been performed.	▪ 0 (device function not active) ▪ 1 (device function active)
		1	Verification has failed.	
		2	Currently performing verification.	
		3	Verification completed.	
		4	Verification has failed.	
		5	Verification performed successfully.	
		6	Verification has not been performed.	
		7	Reserved	

Selection: Device function Binary Input Slot 81

Slot	Sub-slot	Bit	Device function	Status (meaning)
81	1	0	Partially empty pipe detection	▪ 0 (device function not active) ▪ 1 (device function active)
		1	Low flow cut off	
		2	Reserved	
		3	Reserved	
		4	Reserved	
		5	Reserved	
		6	Reserved	
		7	Reserved	

Data structure

Input data of Binary Input

Byte 1	Byte 2
Binary Input	Status [1]

1) Status coding → 🗎 80

Volume module

Transmit the volume counter value from the measuring device to the automation system.

The Volume module cyclically transmits the volume, including the status, from the measuring device to the automation system. The totalizer value is depicted in the first four bytes in the form of a floating point number as per the IEEE 754 standard. The fifth byte contains standardized status information pertaining to the input variable.

Selection: input variable

Slot	Sub-slot	Input variables
2	1	Volume

Data structure

Volume input data

Byte 1	Byte 2	Byte 3	Byte 4	Byte 5
Measured value: floating point number (IEEE 754)				Status [1]

1) Status coding → 🗎 80

Volume Totalizer Control module

Transmit the volume counter value from the measuring device to the automation system.

The Volume Totalizer Control module cyclically transmits the volume, including the status, from the measuring device to the automation system. The totalizer value is depicted in the first four bytes in the form of a floating point number as per the IEEE 754 standard. The fifth byte contains standardized status information pertaining to the input variable.

Selection: input variable

Slot	Sub-slot	Input variables
2	1	Volume

Data structure

Volume Totalizer Control input data

Byte 1	Byte 2	Byte 3	Byte 4	Byte 5
Measured value: floating point number (IEEE 754)				Status [1]

1) Status coding → 🗎 80

Selection: output variable

Transmit the control value from the automation system to the measuring device.

Slot	Sub-slot	Value	Input variable
2	1	1	Reset to "0"
		2	Preset value
		3	Stop
		4	Totalize

Data structure

Volume Totalizer Control output data

Byte 1
Control variable

Totalizer module

Transmit totalizer value from the measuring device to the automation system.

The Totalizer module cyclically transmits a selected totalizer value, including the status, from the measuring device to the automation system. The totalizer value is depicted in the first four bytes in the form of a floating point number as per the IEEE 754 standard. The fifth byte contains standardized status information pertaining to the input variable.

Selection: input variable

Slot	Sub-slot	Input variable
70 to 71	1	▪ Mass flow ▪ Volume flow ▪ Corrected volume flow

Data structure

Totalizer input data

Byte 1	Byte 2	Byte 3	Byte 4	Byte 5
Measured value: floating point number (IEEE 754)				Status [1]

1) Status coding → 🗎 80

Totalizer Control module

Transmit totalizer value from the measuring device to the automation system.

The Totalizer Control module cyclically transmits a selected totalizer value, including the status, from the measuring device to the automation system. The totalizer value is depicted in the first four bytes in the form of a floating point number as per the IEEE 754 standard. The fifth byte contains standardized status information pertaining to the input variable.

Selection: input variable

Slot	Sub-slot	Input variable
70 to 71	1	▪ Mass flow ▪ Volume flow ▪ Corrected volume flow

Data structure

Totalizer Control input data

Byte 1	Byte 2	Byte 3	Byte 4	Byte 5
Measured value: floating point number (IEEE 754)				Status [1]

1) Status coding → 80

Selection: output variable

Transmit the control value from the automation system to the measuring device.

Slot	Sub-slot	Value	Input variable
70 to 71	1	1	Reset to "0"
		2	Preset value
		3	Stop
		4	Totalize

Data structure

Totalizer Control output data

Byte 1
Control variable

Analog Output module

Transmit a compensation value from the automation system to the measuring device.

Analog Output modules cyclically transmit compensation values, including the status and associated unit, from the automation system to the measuring device. The compensation value is depicted in the first four bytes in the form of a floating point number as per the IEEE 754 standard. The fifth byte contains standardized status information pertaining to the compensation value.

Assigned compensation values

The selection is made via: Expert → Sensor → External compensation

Slot	Sub-slot	Compensation value
160	1	Temperature
161		Density

Data structure

Output data of Analog Output

Byte 1	Byte 2	Byte 3	Byte 4	Byte 5
Measured value: floating point number (IEEE 754)				Status [1]

1) Status coding → 80

Failsafe mode

A failsafe mode can be defined for using the compensation values.

If the status is GOOD or UNCERTAIN, the compensation values transmitted by the automation system are used. If the status is BAD, the failsafe mode is activated for the use of the compensation values.

Parameters are available per compensation value to define the failsafe mode: Expert → Sensor → External compensation

Fail safe type parameter

- Fail safe value option: The value defined in the Fail safe value parameter is used.
- Fallback value option: The last valid value is used.
- Off option: The failsafe mode is disabled.

Fail safe value parameter

Use this parameter to enter the compensation value which is used if the Fail safe value option is selected in the Fail safe type parameter.

Binary Output module

Transmit binary output values from the automation system to the measuring device.

Binary output values are used by the automation system to enable and disable device functions.

Binary output values cyclically transmit discrete output values, including the status, from the automation system to the measuring device. The discrete output values are transmitted in the first byte. The second byte contains standardised status information pertaining to the output value.

Selection: Device function Binary Output Slot 210

Slot	Sub-slot	Bit	Device function	Status (meaning)
210	1	0	Start verification.	A change of status from 0 to 1 starts Heartbeat Verification [1]
		1	Reserved	
		2	Reserved	
		3	Reserved	
		4	Reserved	
		5	Reserved	

Slot	Sub-slot	Bit	Device function	Status (meaning)
		6	Reserved	
		7	Reserved	

1) Only available with the Heartbeat application package

Selection: Device function Binary Output Slot 211

Slot	Sub-slot	Bit	Device function	Status (meaning)
211	1	0	Flow override	▪ 0 (disable device function) ▪ 1 (enable device function)
		1	Zero adjust	
		2	Relay output	Relay output value: ▪ 0 ▪ 1
		3	Relay output	
		4	Relay output	
		5	Reserved	
		6	Reserved	
		7	Reserved	

Data structure

Binary Output input data

Byte 1	Byte 2
Binary Output	Status [1) 2)]

1) Status coding → 🗎 80
2) If the status is BAD, the control variable is not adopted.

9.3.3 Status coding

Status	Coding (hex)	Meaning
BAD - Maintenance alarm	0x24 to 0x27	A measured value is not available because a device error has occurred.
BAD - Process related	0x28 to 0x2B	A measured value is not available because the process conditions are not within the device's technical specification limits.
BAD - Function check	0x3C to 0x03F	A function check is active (e.g. cleaning or calibration)
UNCERTAIN - Initial value	0x4F to 0x4F	A predefined value is output until a correct measured value is available again or corrective measures have been performed that change this status.
UNCERTAIN - Maintenance demanded	0x68 to 0x6B	Signs of wear and tear have been detected on the measuring device. Short-term maintenance is needed to ensure that the measuring device remains operational. The measured value might be invalid. The use of the measured value depends on the application.
UNCERTAIN - Process related	0x78 to 0x7B	The process conditions are not within the device's technical specification limits. This could have a negative impact on the quality and accuracy of the measured value. The use of the measured value depends on the application.
GOOD - OK	0x80 to 0x83	No error has been diagnosed.

Status	Coding (hex)	Meaning
GOOD - Maintenance required	0xA4 to 0xA7	The measured value is valid. The device will require servicing in the near future.
GOOD - Maintenance demanded	0xA8 to 0xAB	The measured value is valid. It is highly advisable to service the device in the near future.
GOOD - Function check	0xBC to 0XBF	The measured value is valid. The measuring device is performing an internal function check. The function check does not have any noticeable effect on the process.

9.3.4 Factory setting

The slots are already assigned in the automation system for initial commissioning.

Assigned slots

Slot	Factory setting
1	Volume flow
2	Volume
20 to 26	–
70 to 71	–
80 to 81	–
160 to 161	–
210 to 211	–

9.4 System redundancy S2

A redundant layout with two automation systems is necessary for processes that are in continuous operation. If one system fails the second system guarantees continued, uninterrupted operation. The measuring device supports S2 system redundancy and can communicate with both automation systems simultaneously.

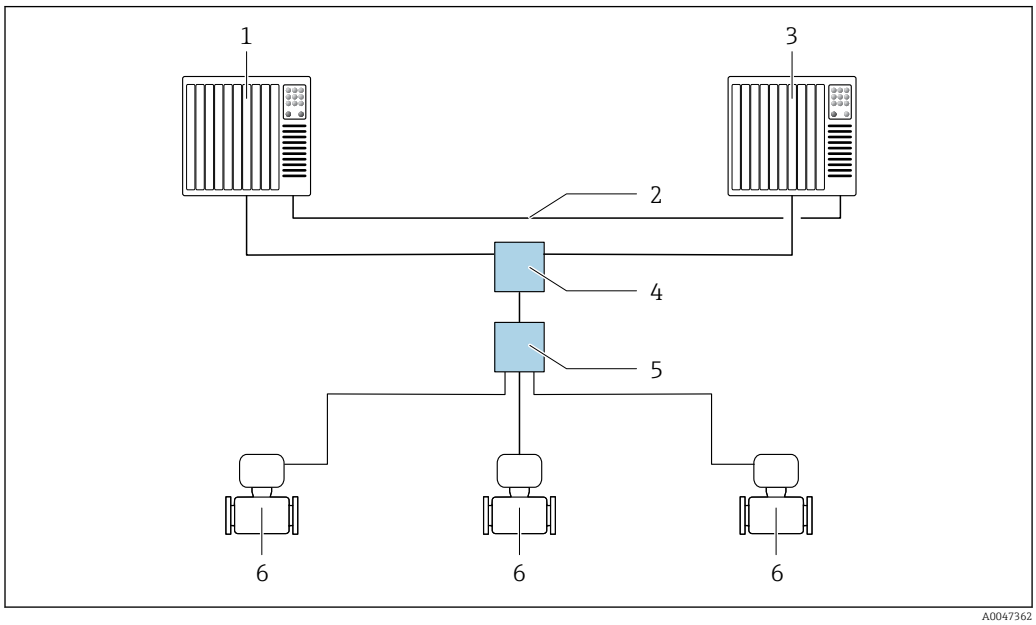

22 Example of the layout of a redundant system (S2): star topology

1 *Automation system 1*
2 *Synchronization of automation systems*
3 *Automation system 2*
4 *Industrial Ethernet Managed Switch*
5 *APL field switch*
6 *Measuring device*

All the devices in the network must support S2 system redundancy.

10 Commissioning

10.1 Post-installation and post-connection check

Before commissioning the device:

- Make sure that the post-installation and post-connection checks have been performed successfully.

- "Post-installation check" checklist → 27
- "Post-connection check" checklist → 42

10.2 Switching on the measuring device

- After a successful post-installation and post-connection check, switch on the device.
  - After a successful startup, the local display switches automatically from the startup display to the operational display.

If the local display is blank or if a diagnostic message is displayed, refer to the section on "Diagnostics and troubleshooting" → 137.

10.3 Connecting via FieldCare

- For FieldCare → 67 connection
- For connecting via FieldCare → 69
- For the FieldCare → 70 user interface

10.4 Setting the operating language

Factory setting: English or ordered local language

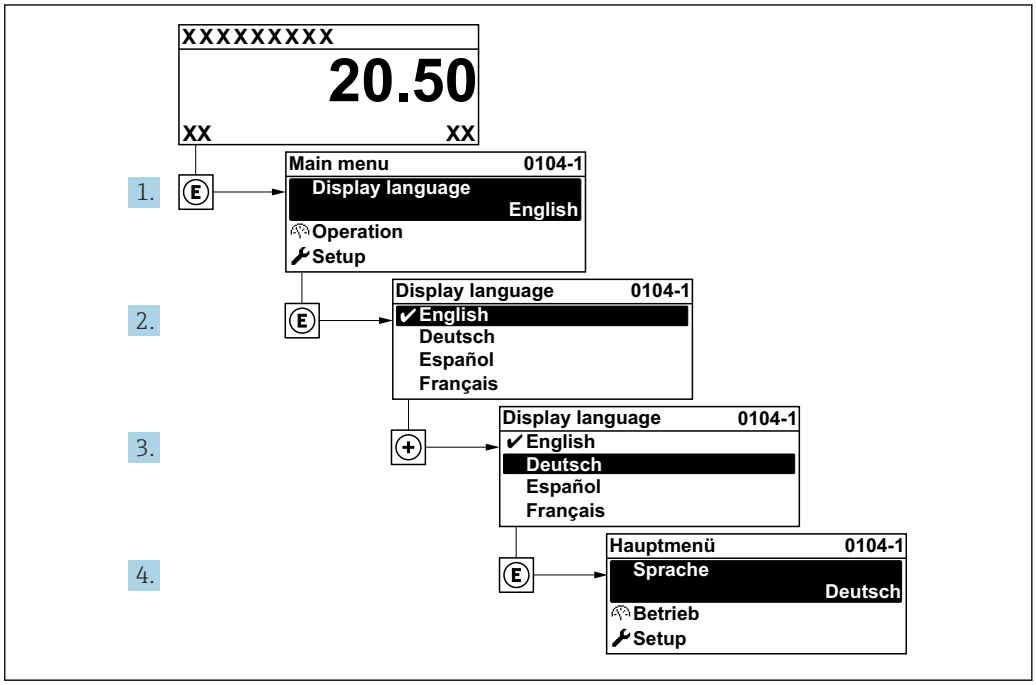

23 *Taking the example of the local display*

10.5 Configuring the measuring device

- The **Setup** menu with its guided wizards contains all the parameters needed for standard operation.
- Navigation to the **Setup** menu

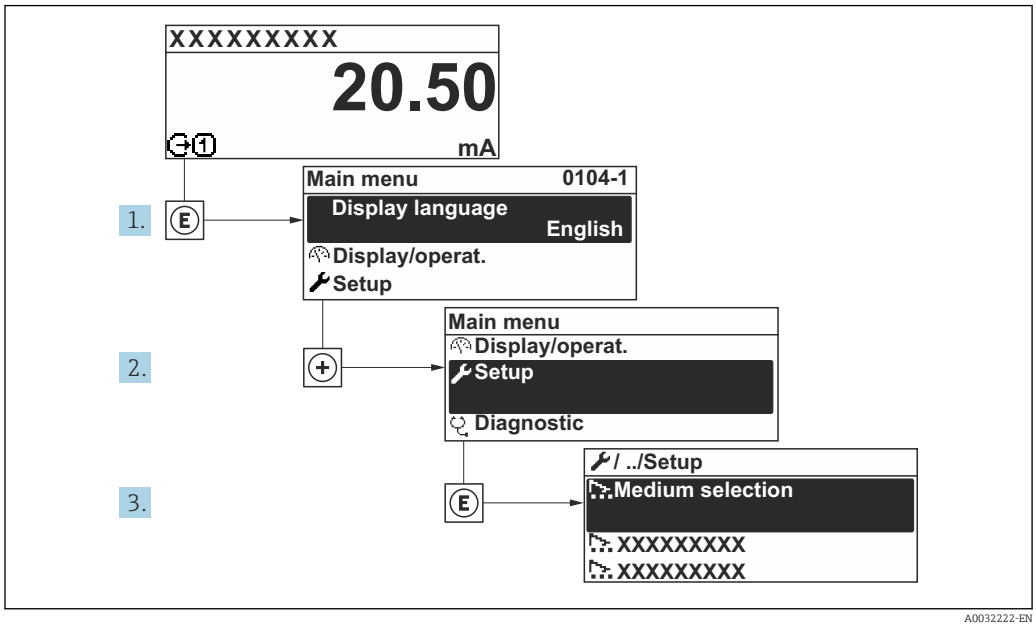

24 *Taking the example of the local display*

The number of submenus and parameters can vary depending on the device version. Certain submenus and parameters in these submenus are not described in the Operation Instructions. Instead a description is provided in the Special Documentation for the device (→ "Supplementary documentation" section).

Navigation
"Setup" menu → PROFINET device name

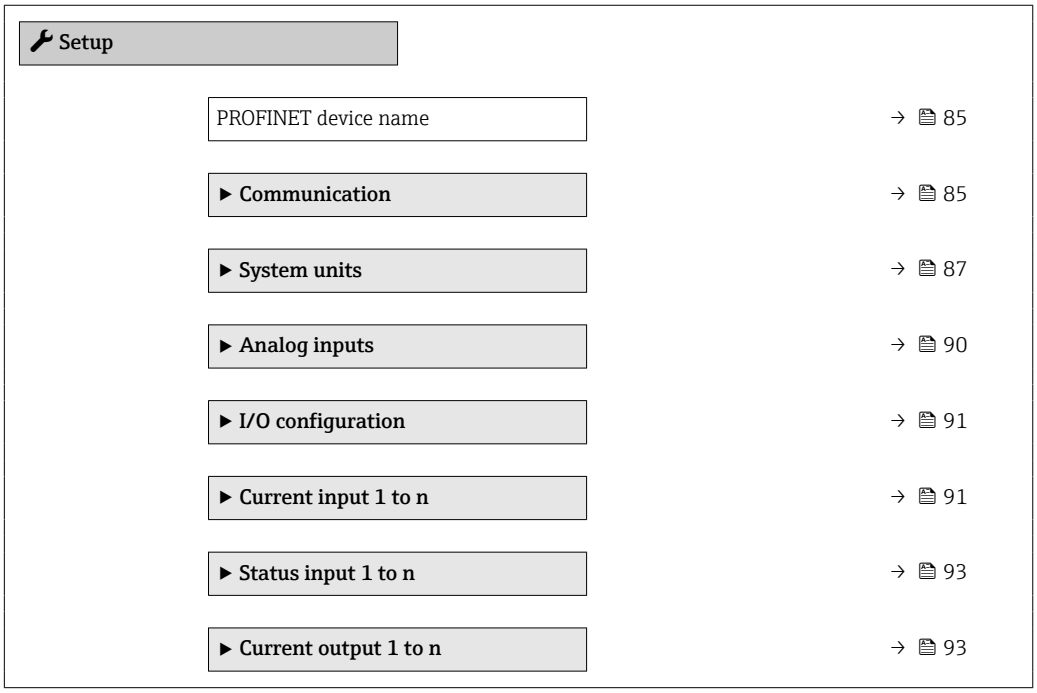

▶ Pulse/frequency/switch output 1 to n	→ 📄 96
▶ Relay output 1 to n	→ 📄 102
▶ Low flow cut off	→ 📄 104
▶ Empty pipe detection	→ 📄 105
▶ Configure flow damping	→ 📄 106
▶ Advanced setup	→ 📄 109

10.5.1 Defining the tag name

A measuring point can be quickly identified within a plant on the basis of the tag name. The tag name is equivalent to the device name (name of station) of the PROFINET specification (data length: 255 bytes)

The device name can be changed via DIP switches or the automation system .

The device name currently used is displayed in the **Name of station** parameter.

Navigation
"Setup" menu → PROFINET device name

Parameter overview with brief description

Parameter	Description	User interface	Factory setting
PROFINET device name	Name of the measuring point.	Max. 32 characters such as letters and numbers.	EH-PROMAG300 serial number of the device

10.5.2 Displaying the communication interface

The **Communication** submenu shows all the current parameter settings for selecting and configuring the communication interface.

Navigation
"Setup" menu → Communication

▶ Communication	
▶ APL port	→ 📄 86
▶ Service interface	→ 📄 86
▶ Network diagnostics	→ 📄 87

"APL port" submenu

Navigation
"Setup" menu → Communication → APL port

▶ APL port	
IP address (7263)	→ 📄 86
Subnet mask (7265)	→ 📄 86
Default gateway (7264)	→ 📄 86
MAC address (7262)	→ 📄 86

Parameter overview with brief description

Parameter	Description	User entry / User interface	Factory setting
IP address	Enter the IP address of the measuring device.	Character string comprising numbers, letters and special characters (15)	0.0.0.0
Default gateway	Enter IP address for the default gateway of the measuring device.	Character string comprising numbers, letters and special characters (15)	0.0.0.0
Subnet mask	Enter subnet mask of the measuring device.	Character string comprising numbers, letters and special characters (15)	255.255.255.0
MAC address	Shows the MAC address of the measuring device.	Character string comprising numbers, letters and special characters	

"Service interface" submenu

Navigation
"Setup" menu → Communication → Service interface

▶ Service interface	
IP address (7209)	→ 📄 87
Subnet mask (7211)	→ 📄 87
Default gateway (7210)	→ 📄 87
MAC address (7214)	→ 📄 87

Parameter overview with brief description

Parameter	Description	User entry / User interface	Factory setting
IP address	Enter the IP address of the measuring device.	4 octet: 0 to 255 (in the particular octet)	192.168.1.212
Subnet mask	Displays the subnet mask.	4 octet: 0 to 255 (in the particular octet)	255.255.255.0
Default gateway	Displays the default gateway.	4 octet: 0 to 255 (in the particular octet)	0.0.0.0
MAC address	Displays the MAC address of the measuring device. MAC = Media Access Control	Unique 12-digit character string comprising letters and numbers, e.g.: 00:07:05:10:01:5F	Each measuring device is given an individual address.

"Network diagnostics" submenu

Navigation
"Setup" menu → Communication → Network diagnostics

▶ Network diagnostics	
Mean squared error (7258)	→ 📄 87
Number of failed received packets (7257)	→ 📄 87

Parameter overview with brief description

Parameter	Description	User interface	Factory setting
Mean squared error	Provides an indication of the link signal quality.	Signed floating-point number	0 dB
Number of failed received packets	Shows the number of failed received packets.	0 to 65 535	0

10.5.3 Setting the system units

In the **System units** submenu the units of all the measured values can be set.

The number of submenus and parameters can vary depending on the device version. Certain submenus and parameters in these submenus are not described in the Operation Instructions. Instead a description is provided in the Special Documentation for the device (→ "Supplementary documentation" section).

Navigation
"Setup" menu → System units

▶ System units	
Volume flow unit	→ 📄 88
Volume unit	→ 📄 88

Conductivity unit	→ 88
Temperature unit	→ 88
Mass flow unit	→ 88
Mass unit	→ 88
Density unit	→ 88
Corrected volume flow unit	→ 89
Corrected volume unit	→ 89

Parameter overview with brief description

Parameter	Prerequisite	Description	Selection	Factory setting
Volume flow unit	–	Select volume flow unit. *Effect* The selected unit applies for: ▪ Output ▪ Low flow cut off ▪ Simulation process variable	Unit choose list	Depends on country: ▪ l/h ▪ gal/min (us)
Volume unit	–	Select volume unit.	Unit choose list	Country-specific: ▪ m^3 ▪ gal (us)
Conductivity unit	The **On** option is selected in the **Conductivity measurement** parameter parameter.	Select conductivity unit. *Effect* The selected unit applies for: Simulation process variable	Unit choose list	µS/cm
Temperature unit	–	Select temperature unit. *Effect* The selected unit applies for: ▪ **Temperature** parameter ▪ **Maximum value** parameter ▪ **Minimum value** parameter ▪ **External temperature** parameter ▪ **Maximum value** parameter ▪ **Minimum value** parameter	Unit choose list	Country-specific: ▪ °C ▪ °F
Mass flow unit	–	Select mass flow unit. *Effect* The selected unit applies for: ▪ Output ▪ Low flow cut off ▪ Simulation process variable	Unit choose list	Country-specific: ▪ kg/h ▪ lb/min
Mass unit	–	Select mass unit.	Unit choose list	Country-specific: ▪ kg ▪ lb
Density unit	–	Select density unit. *Effect* The selected unit applies for: ▪ Output ▪ Simulation process variable	Unit choose list	Country-specific: ▪ kg/l ▪ lb/ft^3

Parameter	Prerequisite	Description	Selection	Factory setting
Corrected volume flow unit	–	Select corrected volume flow unit. *Result* The selected unit applies for: **Corrected volume flow** parameter (→ 128)	Unit choose list	Country-specific: ▪ Nl/h ▪ Sft^3/h
Corrected volume unit	–	Select corrected volume unit.	Unit choose list	Country-specific: ▪ Nm^3 ▪ Sft^3

10.5.4 Configuration of the Analog Inputs

The **Analog inputs** submenu guides the user systematically to the individual **Analog input 1 to n** submenu. From here you get to the parameters of the individual analog input.

Navigation
"Setup" menu → Analog inputs

▶ **Analog inputs**	
▶ **Volume flow**	→ 📄 90

"Analog inputs" submenu

Navigation
"Setup" menu → Analog inputs → Volume flow

▶ **Volume flow**	
Assign process variable (11074)	→ 📄 90
Damping (11073)	→ 📄 90

Parameter overview with brief description

Parameter	Description	User interface / User entry	Factory setting
Parent class		0 to 255	60
Assign process variable	Select a process variable.	▪ Mass flow ▪ Volume flow ▪ Temperature ▪ Electronics temperature ▪ Noise * ▪ Coil current shot time * ▪ Reference electrode potential against PE * ▪ HBSI * ▪ Build-up index ** ▪ Current input 1 ▪ Current input 2 ▪ Current input 3 ▪ Flow velocity ▪ Conductivity * ▪ Corrected conductivity * ▪ Corrected volume flow	Volume flow
Damping	Enter time constant for input damping (PT1 element). Damping reduces the effect of fluctuations in the measured value on the output signal.	Positive floating-point number	1.0 s

* Visibility depends on order options or device settings

** The build-up index is only available in conjunction with Heartbeat Technology. If Heartbeat Technology was ordered together with the measuring device, the option will already be enabled, and no further action is required. If Heartbeat Technology was ordered at a later date, you must first activate the option under 'Activate SW option' by entering the activation key you received. To purchase Heartbeat Technology, contact your local sales and service center. In addition to Heartbeat Technology, conductivity measurement must be enabled on the device. To do this, go to the 'Conductivity measurement' parameter on the 'Process parameters' menu and select the 'On' option.

10.5.5 Displaying the I/O configuration

The **I/O configuration** submenu guides the user systematically through all the parameters in which the configuration of the I/O modules is displayed.

Navigation
"Setup" menu → I/O configuration

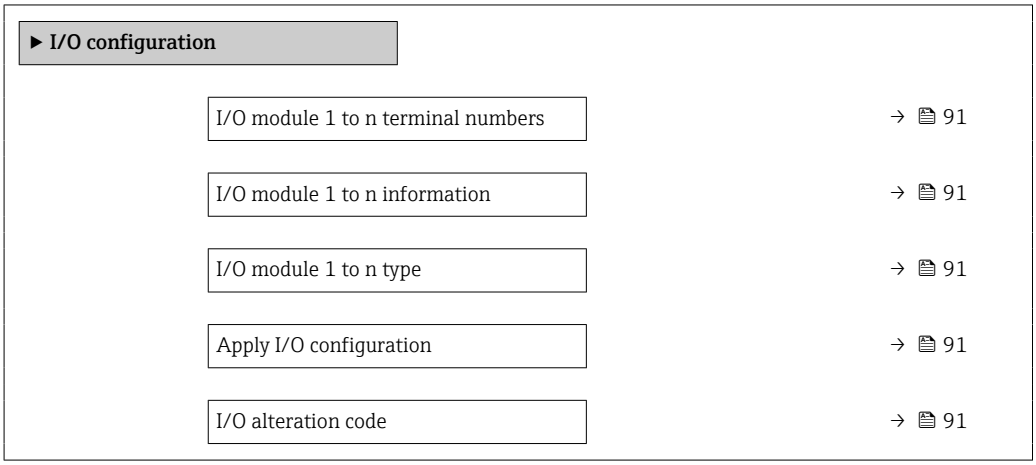

Parameter overview with brief description

Parameter	Description	User interface / Selection / User entry	Factory setting
I/O module 1 to n terminal numbers	Shows the terminal numbers used by the I/O module.	▪ Not used ▪ 26-27 (I/O 1) ▪ 24-25 (I/O 2) ▪ 22-23 (I/O 3)	–
I/O module 1 to n information	Shows information of the plugged I/O module.	▪ Not plugged ▪ Invalid ▪ Not configurable ▪ Configurable ▪ PROFINET	–
I/O module 1 to n type	Shows the I/O module type.	▪ Off ▪ Current output * ▪ Current input * ▪ Status input * ▪ Pulse/frequency/switch output * ▪ Double pulse output * ▪ Relay output *	Off
Apply I/O configuration	Apply parameterization of the freely configurable I/O module.	▪ No ▪ Yes	No
I/O alteration code	Enter the code in order to change the I/O configuration.	Positive integer	0

* Visibility depends on order options or device settings

10.5.6 Configuring the current input

The **"Current input" wizard** guides the user systematically through all the parameters that have to be set for configuring the current input.

Navigation
"Setup" menu → Current input

▶ Current input 1 to n	
Terminal number	→ 📄 92
Signal mode	→ 📄 92
0/4 mA value	→ 📄 92
20 mA value	→ 📄 92
Current span	→ 📄 92
Failure mode	→ 📄 92
Failure value	→ 📄 92

Parameter overview with brief description

Parameter	Prerequisite	Description	User interface / Selection / User entry	Factory setting
Terminal number	–	Shows the terminal numbers used by the current input module.	▪ Not used ▪ 24-25 (I/O 2) ▪ 22-23 (I/O 3)	–
Signal mode	The measuring device is **not** approved for use in the hazardous area with type of protection Ex-i.	Select the signal mode for the current input.	▪ Passive ▪ Active *	Active
0/4 mA value	–	Enter 4 mA value.	Signed floating-point number	0
20 mA value	–	Enter 20 mA value.	Signed floating-point number	Depends on country and nominal diameter
Current span	–	Select current range for process value output and upper/lower level for alarm signal.	▪ 4...20 mA (4...20.5 mA) ▪ 4...20 mA NE (3.8...20.5 mA) ▪ 4...20 mA US (3.9...20.8 mA) ▪ 0...20 mA (0...20.5 mA)	Country-specific: ▪ 4...20 mA NE (3.8...20.5 mA) ▪ 4...20 mA US (3.9...20.8 mA)
Failure mode	–	Define input behavior in alarm condition.	▪ Alarm ▪ Last valid value ▪ Defined value	Alarm
Failure value	In the **Failure mode** parameter, the **Defined value** option is selected.	Enter value to be used by the device if input value from external device is missing.	Signed floating-point number	0

* Visibility depends on order options or device settings

10.5.7 Configuring the status input

The **Status input** submenu guides the user systematically through all the parameters that have to be set for configuring the status input.

Navigation
"Setup" menu → Status input 1 to n

▶ Status input 1 to n	
Assign status input	→ 📄 93
Terminal number	→ 📄 93
Active level	→ 📄 93
Terminal number	→ 📄 93
Response time status input	→ 📄 93
Terminal number	→ 📄 93

Parameter overview with brief description

Parameter	Description	Selection / User interface / User entry	Factory setting
Assign status input	Select function for the status input.	▪ Off ▪ Reset totalizer 1 ▪ Reset totalizer 2 ▪ Reset totalizer 3 ▪ Reset all totalizers ▪ Flow override ▪ Zero adjustment	Off
Terminal number	Shows the terminal numbers used by the status input module.	▪ Not used ▪ 24-25 (I/O 2) ▪ 22-23 (I/O 3)	–
Active level	Define input signal level at which the assigned function is triggered.	▪ High ▪ Low	High
Response time status input	Define the minimum amount of time the input signal level must be present before the selected function is triggered.	5 to 200 ms	50 ms

10.5.8 Configuring the current output

The **Current output** wizard guides you systematically through all the parameters that have to be set for configuring the current output.

Navigation
"Setup" menu → Current output

▶ Current output 1 to n

Terminal number	→ 📄 94
Signal mode	→ 📄 94
Process variable current output	→ 📄 94
Current range output	→ 📄 95
Lower range value output	→ 📄 95
Upper range value output	→ 📄 95
Fixed current	→ 📄 95
Damping current output	→ 📄 95
Failure behavior current output	→ 📄 95
Failure current	→ 📄 95

Parameter overview with brief description

Parameter	Prerequisite	Description	User interface / Selection / User entry	Factory setting
Terminal number	–	Shows the terminal numbers used by the current output module.	▪ Not used ▪ 26-27 (I/O 1) ▪ 24-25 (I/O 2) ▪ 22-23 (I/O 3)	–
Signal mode	–	Select the signal mode for the current output.	▪ Active * ▪ Passive *	Active
Process variable current output	–	Select the process variable for the current output.	▪ Off ▪ Volume flow ▪ Mass flow ▪ Corrected volume flow ▪ Flow velocity ▪ Conductivity ▪ Corrected conductivity * ▪ Temperature * ▪ Electronics temperature ▪ Noise * ▪ Coil current shot time * ▪ Reference electrode potential against PE * ▪ HBSI * ▪ Build-up index * ▪ Test point 1 ▪ Test point 2 ▪ Test point 3	Volume flow

Parameter	Prerequisite	Description	User interface / Selection / User entry	Factory setting
Current range output	–	Select current range for process value output and upper/lower level for alarm signal.	▪ 4...20 mA NE (3.8...20.5 mA) ▪ 4...20 mA US (3.9...20.8 mA) ▪ 4...20 mA (4... 20.5 mA) ▪ 0...20 mA (0... 20.5 mA) ▪ Fixed value	Depends on country: ▪ 4...20 mA NE (3.8...20.5 mA) ▪ 4...20 mA US (3.9...20.8 mA)
Lower range value output	One of the following options is selected in the **Current span** parameter (→ 🗎 95): ▪ 4...20 mA NE (3.8...20.5 mA) ▪ 4...20 mA US (3.9...20.8 mA) ▪ 4...20 mA (4... 20.5 mA) ▪ 0...20 mA (0... 20.5 mA)	Enter lower range value for the measured value range.	Signed floating-point number	Depends on country: ▪ 0 l/h ▪ 0 gal/min (us)
Upper range value output	One of the following options is selected in the **Current span** parameter (→ 🗎 95): ▪ 4...20 mA NE (3.8...20.5 mA) ▪ 4...20 mA US (3.9...20.8 mA) ▪ 4...20 mA (4... 20.5 mA) ▪ 0...20 mA (0... 20.5 mA)	Enter upper range value for the measured value range.	Signed floating-point number	Depends on country and nominal diameter
Fixed current	The **Fixed current** option is selected in the **Current span** parameter (→ 🗎 95).	Defines the fixed output current.	0 to 22.5 mA	22.5 mA
Damping current output	A process variable is selected in the **Assign current output** parameter (→ 🗎 94) and one of the following options is selected in the **Current span** parameter (→ 🗎 95): ▪ 4...20 mA NE (3.8...20.5 mA) ▪ 4...20 mA US (3.9...20.8 mA) ▪ 4...20 mA (4... 20.5 mA) ▪ 0...20 mA (0... 20.5 mA)	Set reaction time for output signal to fluctuations in the measured value.	0.0 to 999.9 s	1.0 s
Failure behavior current output	A process variable is selected in the **Assign current output** parameter (→ 🗎 94) and one of the following options is selected in the **Current span** parameter (→ 🗎 95): ▪ 4...20 mA NE (3.8...20.5 mA) ▪ 4...20 mA US (3.9...20.8 mA) ▪ 4...20 mA (4... 20.5 mA) ▪ 0...20 mA (0... 20.5 mA)	Define output behavior in alarm condition.	▪ Min. ▪ Max. ▪ Last valid value ▪ Actual value ▪ Fixed value	Max.
Failure current	The **Defined value** option is selected in the **Failure mode** parameter.	Enter current output value in alarm condition.	0 to 22.5 mA	22.5 mA

* Visibility depends on order options or device settings

10.5.9 Configuring the pulse/frequency/switch output

The **Pulse/frequency/switch output** wizard guides you systematically through all the parameters that can be set for configuring the selected output type.

Navigation
"Setup" menu → Advanced setup → Pulse/frequency/switch output

▶ **Pulse/frequency/switch output 1 to n**		
	Operating mode	→ 📄 96

Parameter overview with brief description

Parameter	Description	Selection	Factory setting
Operating mode	Define the output as a pulse, frequency or switch output.	▪ Pulse ▪ Frequency ▪ Switch	Pulse

Configuring the pulse output

Navigation
"Setup" menu → Pulse/frequency/switch output

▶ **Pulse/frequency/switch output 1 to n**		
	Operating mode	→ 📄 97
	Terminal number	→ 📄 97
	Signal mode	→ 📄 97
	Assign pulse output	→ 📄 97
	Pulse scaling	→ 📄 97
	Pulse width	→ 📄 97
	Failure mode	→ 📄 97
	Invert output signal	→ 📄 97

Parameter overview with brief description

Parameter	Prerequisite	Description	Selection / User interface / User entry	Factory setting
Operating mode	–	Define the output as a pulse, frequency or switch output.	▪ Pulse ▪ Frequency ▪ Switch	Pulse
Terminal number	–	Shows the terminal numbers used by the PFS output module.	▪ Not used ▪ 24-25 (I/O 2) ▪ 22-23 (I/O 3)	–
Signal mode	–	Select the signal mode for the PFS output.	▪ Passive ▪ Active * ▪ Passive NE	Passive
Assign pulse output	The **Pulse** option is selected in the **Operating mode** parameter.	Select process variable for pulse output.	▪ Off ▪ Volume flow ▪ Mass flow ▪ Corrected volume flow	Off
Pulse scaling	The **Pulse** option is selected in the **Operating mode** parameter (→ 🗎 96) and a process variable is selected in the **Assign pulse output** parameter (→ 🗎 97).	Enter quantity for measured value at which a pulse is output.	Positive floating point number	Depends on country and nominal diameter
Pulse width	The **Pulse** option is selected in the **Operating mode** parameter (→ 🗎 96) and a process variable is selected in the **Assign pulse output** parameter (→ 🗎 97).	Define time width of the output pulse.	0.05 to 2 000 ms	100 ms
Failure mode	The **Pulse** option is selected in the **Operating mode** parameter (→ 🗎 96) and a process variable is selected in the **Assign pulse output** parameter (→ 🗎 97).	Define output behavior in alarm condition.	▪ Actual value ▪ No pulses	No pulses
Invert output signal	–	Invert the output signal.	▪ No ▪ Yes	No

* Visibility depends on order options or device settings

Configuring the frequency output

Navigation

"Setup" menu → Pulse/frequency/switch output

▶ **Pulse/frequency/switch output 1 to n**

Operating mode	→ 🗎 98
Terminal number	→ 🗎 98
Signal mode	→ 🗎 98
Assign frequency output	→ 🗎 98

Minimum frequency value	→ 📄 99
Maximum frequency value	→ 📄 99
Measuring value at minimum frequency	→ 📄 99
Measuring value at maximum frequency	→ 📄 99
Failure mode	→ 📄 99
Failure frequency	→ 📄 99
Invert output signal	→ 📄 99

Parameter overview with brief description

Parameter	Prerequisite	Description	Selection / User interface / User entry	Factory setting
Operating mode	–	Define the output as a pulse, frequency or switch output.	▪ Pulse ▪ Frequency ▪ Switch	Pulse
Terminal number	–	Shows the terminal numbers used by the PFS output module.	▪ Not used ▪ 24-25 (I/O 2) ▪ 22-23 (I/O 3)	–
Signal mode	–	Select the signal mode for the PFS output.	▪ Passive ▪ Active * ▪ Passive NE	Passive
Assign frequency output	In the **Operating mode** parameter (→ 📄 96), the **Frequency** option is selected.	Select process variable for frequency output.	▪ Off ▪ Volume flow ▪ Mass flow ▪ Corrected volume flow ▪ Flow velocity ▪ Conductivity * ▪ Corrected conductivity * ▪ Temperature * ▪ Electronics temperature ▪ Noise * ▪ Coil current shot time * ▪ Reference electrode potential against PE * ▪ HBSI * ▪ Build-up index * ▪ Test point 1 ▪ Test point 2 ▪ Test point 3	Off

Parameter	Prerequisite	Description	Selection / User interface / User entry	Factory setting
Minimum frequency value	The **Frequency** option is selected in the **Operating mode** parameter (→ 🗎 96) and a process variable is selected in the **Assign frequency output** parameter (→ 🗎 98).	Enter minimum frequency.	0.0 to 10 000.0 Hz	0.0 Hz
Maximum frequency value	The **Frequency** option is selected in the **Operating mode** parameter (→ 🗎 96) and a process variable is selected in the **Assign frequency output** parameter (→ 🗎 98).	Enter maximum frequency.	0.0 to 10 000.0 Hz	10 000.0 Hz
Measuring value at minimum frequency	The **Frequency** option is selected in the **Operating mode** parameter (→ 🗎 96) and a process variable is selected in the **Assign frequency output** parameter (→ 🗎 98).	Enter measured value for minimum frequency.	Signed floating-point number	Depends on country and nominal diameter
Measuring value at maximum frequency	The **Frequency** option is selected in the **Operating mode** parameter (→ 🗎 96) and a process variable is selected in the **Assign frequency output** parameter (→ 🗎 98).	Enter measured value for maximum frequency.	Signed floating-point number	Depends on country and nominal diameter
Failure mode	The **Frequency** option is selected in the **Operating mode** parameter (→ 🗎 96) and a process variable is selected in the **Assign frequency output** parameter (→ 🗎 98).	Define output behavior in alarm condition.	▪ Actual value ▪ Defined value ▪ 0 Hz	0 Hz
Failure frequency	In the **Operating mode** parameter (→ 🗎 96), the **Frequency** option is selected, in the **Assign frequency output** parameter (→ 🗎 98) a process variable is selected, and in the **Failure mode** parameter, the **Defined value** option is selected.	Enter frequency output value in alarm condition.	0.0 to 12 500.0 Hz	0.0 Hz
Invert output signal	–	Invert the output signal.	▪ No ▪ Yes	No

* Visibility depends on order options or device settings

Configuring the switch output

Navigation
"Setup" menu → Pulse/frequency/switch output

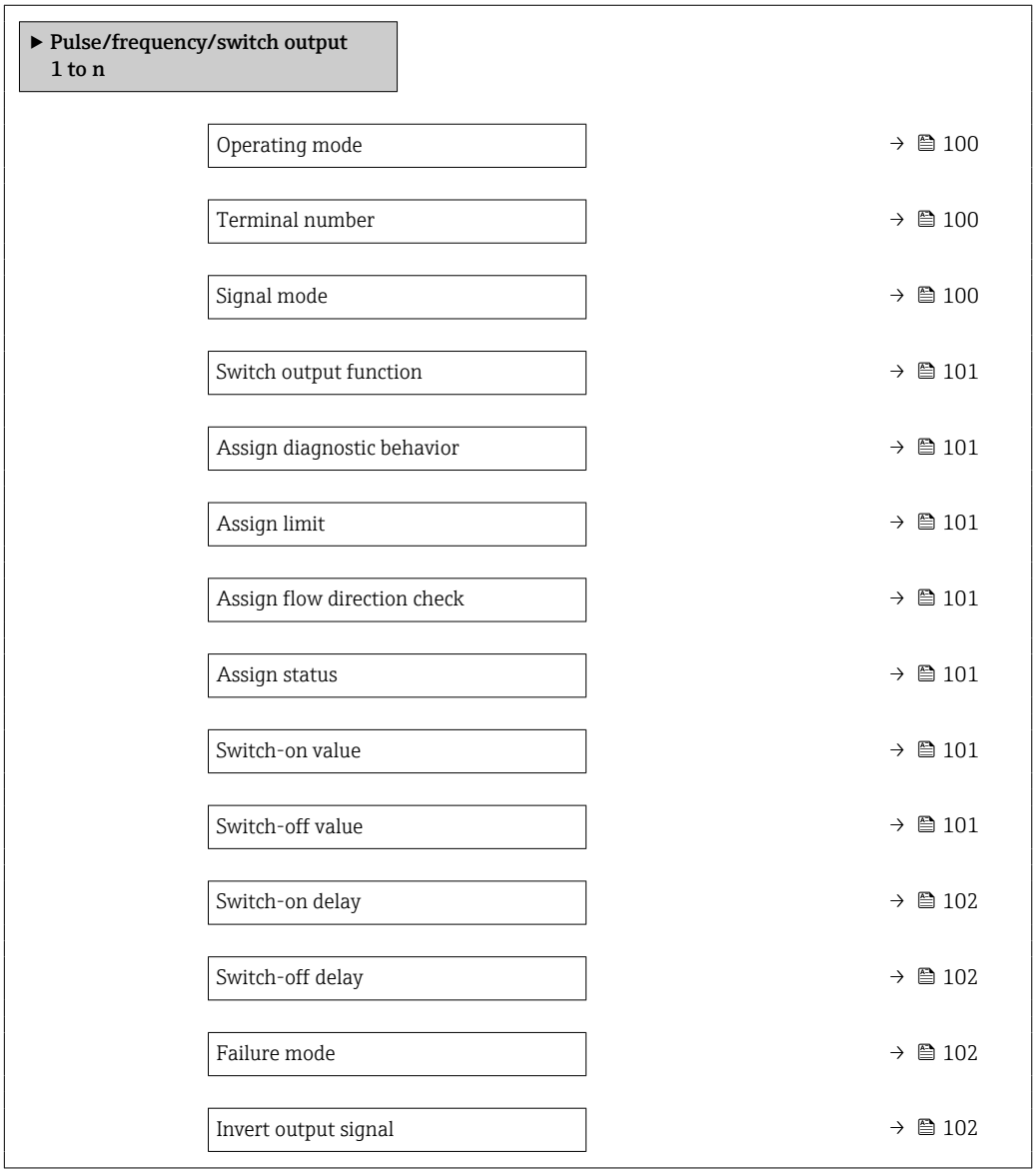

Parameter overview with brief description

Parameter	Prerequisite	Description	Selection / User interface / User entry	Factory setting
Operating mode	–	Define the output as a pulse, frequency or switch output.	▪ Pulse ▪ Frequency ▪ Switch	Pulse
Terminal number	–	Shows the terminal numbers used by the PFS output module.	▪ Not used ▪ 24-25 (I/O 2) ▪ 22-23 (I/O 3)	–
Signal mode	–	Select the signal mode for the PFS output.	▪ Passive ▪ Active * ▪ Passive NE	Passive

Parameter	Prerequisite	Description	Selection / User interface / User entry	Factory setting
Switch output function	The **Switch** option is selected in the **Operating mode** parameter.	Select function for switch output.	▪ Off ▪ On ▪ Diagnostic behavior ▪ Limit ▪ Flow direction check ▪ Status	Off
Assign diagnostic behavior	▪ In the **Operating mode** parameter, the **Switch** option is selected. ▪ In the **Switch output function** parameter, the **Diagnostic behavior** option is selected.	Select diagnostic behavior for switch output.	▪ Alarm ▪ Alarm or warning ▪ Warning	Alarm
Assign limit	▪ In the **Operating mode** parameter, the **Switch** option is selected. ▪ In the **Switch output function** parameter, the **Limit** option is selected.	Select process variable for limit function.	▪ Off ▪ Volume flow ▪ Mass flow ▪ Corrected volume flow ▪ Flow velocity ▪ Conductivity * ▪ Corrected conductivity * ▪ Temperature * ▪ Electronics temperature ▪ Totalizer 1 ▪ Totalizer 2 ▪ Totalizer 3	Volume flow
Assign flow direction check	▪ The **Switch** option is selected in the **Operating mode** parameter. ▪ The **Flow direction check** option is selected in the **Switch output function** parameter.	Select process variable for flow direction monitoring.	▪ Off ▪ Volume flow ▪ Mass flow ▪ Corrected volume flow	Volume flow
Assign status	▪ The **Switch** option is selected in the **Operating mode** parameter. ▪ The **Status** option is selected in the **Switch output function** parameter.	Select device status for switch output.	▪ Empty pipe detection ▪ Low flow cut off ▪ Binary output * ▪ Binary output * ▪ Binary output * ▪ Build-up index * ▪ HBSI limit exceeded *	Empty pipe detection
Switch-on value	▪ The **Switch** option is selected in the **Operating mode** parameter. ▪ The **Limit** option is selected in the **Switch output function** parameter.	Enter measured value for the switch-on point.	Signed floating-point number	Country-specific: ▪ 0 l/h ▪ 0 gal/min (us)
Switch-off value	▪ The **Switch** option is selected in the **Operating mode** parameter. ▪ The **Limit** option is selected in the **Switch output function** parameter.	Enter measured value for the switch-off point.	Signed floating-point number	Country-specific: ▪ 0 l/h ▪ 0 gal/min (us)

Parameter	Prerequisite	Description	Selection / User interface / User entry	Factory setting
Switch-on delay	▪ The **Switch** option is selected in the **Operating mode** parameter. ▪ The **Limit** option is selected in the **Switch output function** parameter.	Define delay for the switch-on of status output.	0.0 to 100.0 s	0.0 s
Switch-off delay	▪ The **Switch** option is selected in the **Operating mode** parameter. ▪ The **Limit** option is selected in the **Switch output function** parameter.	Define delay for the switch-off of status output.	0.0 to 100.0 s	0.0 s
Failure mode	–	Define output behavior in alarm condition.	▪ Actual status ▪ Open ▪ Closed	Open
Invert output signal	–	Invert the output signal.	▪ No ▪ Yes	No

* Visibility depends on order options or device settings

10.5.10 Configuring the relay output

The **Relay output** wizard guides the user systematically through all the parameters that have to be set for configuring the relay output.

Navigation

"Setup" menu → Relay output 1 to n

▶ **Relay output 1 to n**

Terminal number	→ 📄 103
Relay output function	→ 📄 103
Assign flow direction check	→ 📄 103
Assign limit	→ 📄 103
Assign diagnostic behavior	→ 📄 103
Assign status	→ 📄 103
Switch-off value	→ 📄 103
Switch-off delay	→ 📄 103
Switch-on value	→ 📄 103
Switch-on delay	→ 📄 104
Failure mode	→ 📄 104

Parameter overview with brief description

Parameter	Prerequisite	Description	User interface / Selection / User entry	Factory setting
Terminal number	–	Shows the terminal numbers used by the relay output module.	▪ Not used ▪ 24-25 (I/O 2) ▪ 22-23 (I/O 3)	–
Relay output function	–	Select the function for the relay output.	▪ Closed ▪ Open ▪ Diagnostic behavior ▪ Limit ▪ Flow direction check ▪ Status	Closed
Assign flow direction check	The **Flow direction check** option is selected in the **Relay output function** parameter.	Select process variable for flow direction monitoring.	▪ Off ▪ Volume flow ▪ Mass flow ▪ Corrected volume flow	Volume flow
Assign limit	The **Limit** option is selected in the **Relay output function** parameter.	Select process variable for limit function.	▪ Off ▪ Volume flow ▪ Mass flow ▪ Corrected volume flow ▪ Flow velocity ▪ Conductivity * ▪ Corrected conductivity * ▪ Temperature * ▪ Electronics temperature ▪ Totalizer 1 ▪ Totalizer 2 ▪ Totalizer 3	Volume flow
Assign diagnostic behavior	In the **Relay output function** parameter, the **Diagnostic behavior** option is selected.	Select diagnostic behavior for switch output.	▪ Alarm ▪ Alarm or warning ▪ Warning	Alarm
Assign status	In the **Relay output function** parameter, the **Digital Output** option is selected.	Select device status for switch output.	▪ Empty pipe detection ▪ Low flow cut off ▪ Binary output * ▪ Binary output * ▪ Binary output * ▪ HBSI limit exceeded *	Empty pipe detection
Switch-off value	In the **Relay output function** parameter, the **Limit** option is selected.	Enter measured value for the switch-off point.	Signed floating-point number	Country-specific: ▪ 0 l/h ▪ 0 gal(us)/min
Switch-off delay	In the **Relay output function** parameter, the **Limit** option is selected.	Define delay for the switch-off of status output.	0.0 to 100.0 s	0.0 s
Switch-on value	The **Limit** option is selected in the **Relay output function** parameter.	Enter measured value for the switch-on point.	Signed floating-point number	Country-specific: ▪ 0 l/h ▪ 0 gal(us)/min

Parameter	Prerequisite	Description	User interface / Selection / User entry	Factory setting
Switch-on delay	In the **Relay output function** parameter, the **Limit** option is selected.	Define delay for the switch-on of status output.	0.0 to 100.0 s	0.0 s
Failure mode	–	Define output behavior in alarm condition.	▪ Actual status ▪ Open ▪ Closed	Open

* Visibility depends on order options or device settings

10.5.11 Configuring the low flow cut off

The **Low flow cut off** wizard systematically guides the user through all the parameters that must be set to configure low flow cut off.

Navigation

"Setup" menu → Low flow cut off

▶ Low flow cut off	
Assign process variable	→ 📄 104
On value low flow cutoff	→ 📄 104
Off value low flow cutoff	→ 📄 104
Pressure shock suppression	→ 📄 104

Parameter overview with brief description

Parameter	Prerequisite	Description	Selection / User entry	Factory setting
Assign process variable	–	Select process variable for low flow cut off.	▪ Off ▪ Volume flow ▪ Mass flow ▪ Corrected volume flow	Volume flow
On value low flow cutoff	A process variable is selected in the **Assign process variable** parameter (→ 📄 104).	Enter on value for low flow cut off.	Positive floating-point number	Depends on country and nominal diameter
Off value low flow cutoff	A process variable is selected in the **Assign process variable** parameter (→ 📄 104).	Enter off value for low flow cut off.	0 to 100.0 %	50 %
Pressure shock suppression	A process variable is selected in the **Assign process variable** parameter (→ 📄 104).	Enter time frame for signal suppression (= active pressure shock suppression).	0 to 100 s	0 s

10.5.12 Configuring empty pipe detection

The measuring devices are calibrated with water (approx. 500 µS/cm) at the factory. For liquids with a lower conductivity, it is advisable to perform a new full pipe adjustment onsite.

The **Empty pipe detection** submenu contains parameters that must be configured for the configuration of empty pipe detection.

Navigation
"Setup" menu → Empty pipe detection

▶ Empty pipe detection	
Empty pipe detection	→ 🗎 105
New adjustment	→ 🗎 105
Progress	→ 🗎 105
Switch point empty pipe detection	→ 🗎 105
Response time empty pipe detection	→ 🗎 105

Parameter overview with brief description

Parameter	Prerequisite	Description	Selection / User interface / User entry	Factory setting
Empty pipe detection	–	Switch empty pipe detection on and off.	▪ Off ▪ On	Off
New adjustment	The **On** option is selected in the **Empty pipe detection** parameter.	Select type of adjustment.	▪ Cancel ▪ Empty pipe adjust ▪ Full pipe adjust	Cancel
Progress	The **On** option is selected in the **Empty pipe detection** parameter.	Shows the progress.	▪ Ok ▪ Busy ▪ Not ok	–
Switch point empty pipe detection	The **On** option is selected in the **Empty pipe detection** parameter.	Enter the switch point in % of the difference between the two adjustment values. The lower the percentage, the earlier the pipe is detected as empty.	0 to 100 %	50 %
Response time empty pipe detection	A process variable is selected in the **Assign process variable** parameter (→ 🗎 105).	Use this function to enter the minimum time (hold time) the signal must be present before diagnostic message S962 "Empty pipe" is triggered in the event of a partially filled or empty measuring pipe.	0 to 100 s	1 s

10.5.13 Configuring flow damping

The **Configure flow damping** wizard guides the user systematically through the parameters, depending on the selected scenario:

- Configuration of damping for the application
  To configure flow damping for the specific requirements of the process application.
- Replace old device
  To adopt the flow damping for the new device in the event of a device replacement.
- Restoring factory settings
  To restore the factory settings of all the parameters that are relevant for flow damping.

Navigation
"Setup" menu → Configure flow damping

▶ **Configure flow damping**	
Scenario	→ 📄 107
Old device	→ 📄 107
CIP filter on	→ 📄 107
Damping level	→ 📄 107
Flow change rate	→ 📄 107
Application	→ 📄 107
Pulsating flow	→ 📄 107
Flow peaks	→ 📄 107
Damping level	→ 📄 107
Filter options	→ 📄 107
Median filter depth	→ 📄 107
Flow damping	→ 📄 107
Support ID	→ 📄 107
Save settings	→ 📄 107

Parameter overview with brief description

Parameter	Description	Selection / User interface	Factory setting
Scenario	Select the applicable scenario.	▪ Replace old device ▪ Configure damping for application ▪ Restore factory settings	Configure damping for application
Old device	Select the measuring device to replace.	▪ Promag 10 (pre-2021) ▪ Promag 50/53 ▪ Promag 55 H	Promag 50/53
CIP filter on	Indicate whether the CIP filter was applied for the device to be replaced.	▪ No ▪ Yes	No
Damping level	Select the degree of damping to apply.	▪ Default ▪ Weak ▪ Strong	Default
Flow change rate	Select the rate at which the flow changes.	▪ Once a day or less ▪ Once an hour or less ▪ Once a minute or less ▪ Once a second or more	Once a minute or less
Application	Select the type of application that applies.	▪ Display flow ▪ Control loop ▪ Totalizing ▪ Batching	Display flow
Pulsating flow	Indicate whether the process is characterized by pulsating flow (e.g. due to a displacement pump).	▪ No ▪ Yes	No
Flow peaks	Select the frequency at which flow interference peaks occur.	▪ Never ▪ Sporadically ▪ Regularly ▪ Continuously	Never
Response Time		▪ Fast ▪ Slow ▪ Normal	Normal
Filter options	Shows the type of flow filter recommended for damping.	▪ Adaptive ▪ Adaptive CIP on ▪ Dynamic ▪ Dynamic CIP on ▪ Binomial ▪ Binomial CIP on	Binomial
Median filter depth	Shows median filter depth recommended for damping.	0 to 255	6
Flow damping	Shows the flow filter depth recommended for damping.	0 to 15	7
Support ID	If the recommended settings are not satisfactory: please contact your Endress +Hauser service organization with the support ID displayed.	0 to 65 535	0
Save settings	Indicate whether to save the recommended settings.	▪ Cancel ▪ Save *	Cancel
Filter Wizard result:		▪ Completed ▪ Aborted	Aborted

* Visibility depends on order options or device settings

10.5.14 "Build-up index adjustment" wizard

The **Build-up index adjustment** wizard guides the user systematically through all the parameters that have to be set for the configuration of build-up detection.

Navigation
"Expert" menu → Sensor → Build-up index adjustment

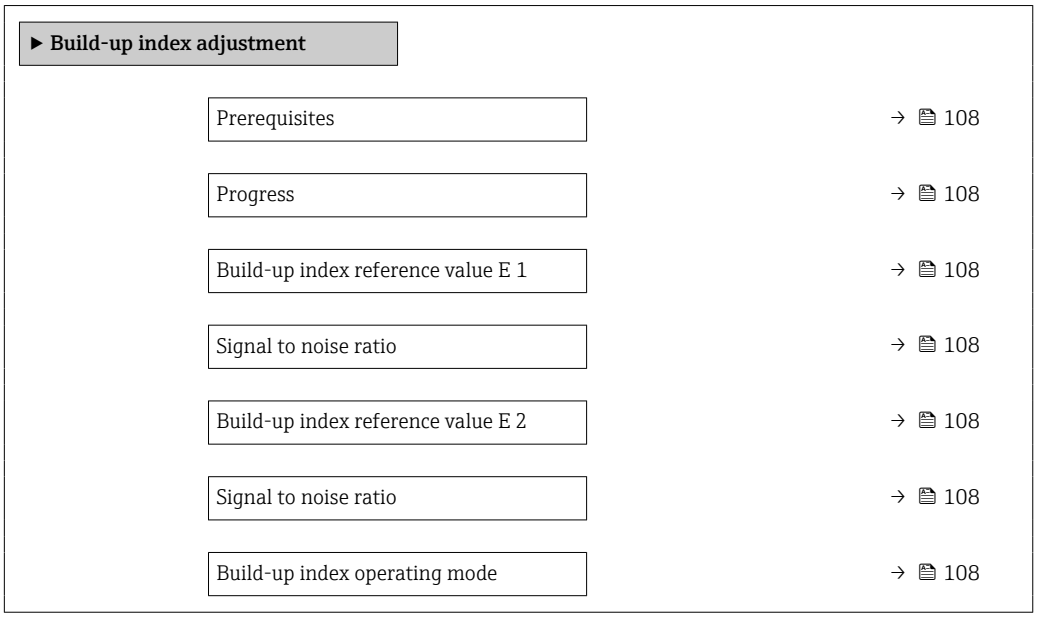

Parameter overview with brief description

Parameter	Description	User interface / Selection	Factory setting
Prerequisites	The following conditions must be met before performing a build-up index adjustment.	▪ The sensor is free of build-up ▪ The measuring tube is completely filled	–
Progress	Shows the progress of the process.	0 to 100 %	–
Build-up index reference value E 1	Shows the reference value 'Build-up free sensor' measured for electrode E1.	0 to 1	0.0
Signal to noise ratio	Shows the signal to noise ratio during the measurement. A value between 1.0 - 2.0 is sufficient to excellent.	Signed floating-point number	0
Build-up index reference value E 2	Shows the reference value 'Build-up free sensor' measured for electrode E2.	0 to 1	0.0
Build-up index operating mode	Select mode of operation for build-up index.	▪ Off ▪ Slow ▪ Standard ▪ Fast	Off

10.6 Advanced settings

The **Advanced setup** submenu with its submenus contains parameters for specific settings.

Navigation to the "Advanced setup" submenu

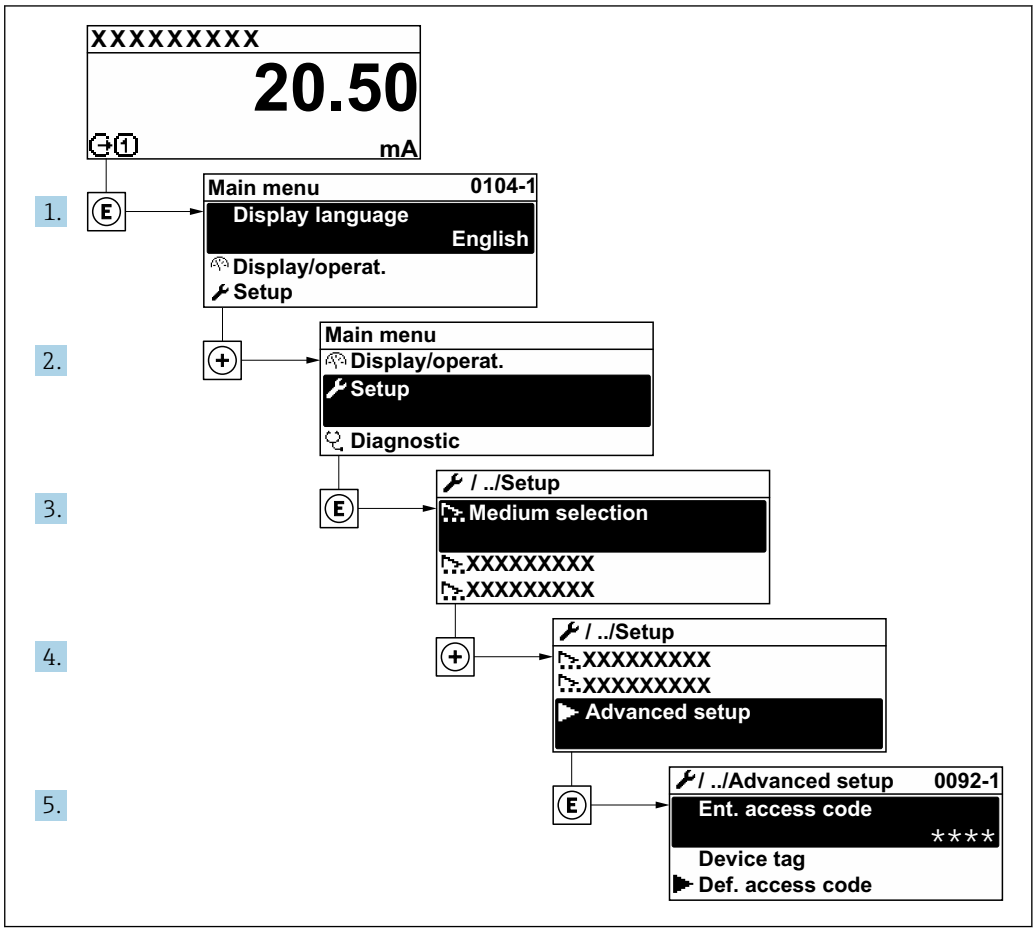

The number of submenus and parameters can vary depending on the device version. Certain submenus and parameters in these submenus are not described in the Operation Instructions. Instead a description is provided in the Special Documentation for the device (→ "Supplementary documentation" section).

Navigation

"Setup" menu → Advanced setup

▶ **Advanced setup**	
Enter access code	→ 110
▶ **Sensor adjustment**	→ 110
▶ **Totalizer 1 to n**	→ 110
▶ **Display**	→ 112

▶ WLAN settings	→ 📄 115
▶ Electrode cleaning cycle	→ 📄 117
▶ Heartbeat setup	→ 📄 118
▶ Configuration backup	→ 📄 119
▶ Administration	→ 📄 120

10.6.1 Using the parameter to enter the access code

Navigation
"Setup" menu → Advanced setup

Parameter overview with brief description

Parameter	Description	User entry
Enter access code	Enter access code to disable write protection of parameters.	Max. 16-digit character string comprising numbers, letters and special characters

10.6.2 Carrying out a sensor adjustment

The **Sensor adjustment** submenu contains parameters that pertain to the functionality of the sensor.

Navigation
"Setup" menu → Advanced setup → Sensor adjustment

▶ Sensor adjustment	
Installation direction	→ 📄 110

Parameter overview with brief description

Parameter	Description	Selection	Factory setting
Installation direction	Select sign of flow direction.	▪ Forward flow ▪ Reverse flow	Forward flow

10.6.3 Configuring the totalizer

In the **"Totalizer 1 to n" submenu** the individual totalizer can be configured.

Navigation
"Setup" menu → Advanced setup → Totalizer 1 to n

▶ Totalizer 1 to n	
Assign process variable	→ 📄 111
Unit totalizer	→ 📄 111
Totalizer operation mode	→ 📄 111
Failure mode	→ 📄 111

Parameter overview with brief description

Parameter	Description	Selection	Factory setting
Assign process variable	Select process variable for totalizer.	▪ Volume flow ▪ Mass flow ▪ Corrected volume flow	Volume flow
Unit totalizer	Select the unit for the process variable of the totalizer.	Unit choose list	Country-specific: ▪ m^3 ▪ ft^3
Totalizer operation mode	Select totalizer calculation mode.	▪ Net flow total ▪ Forward flow total ▪ Reverse flow total ▪ Last valid value	Net flow total
Failure mode	Define the totalizer behavior in the event of a device alarm.	▪ Stop ▪ Actual value ▪ Last valid value	Actual value

10.6.4 Carrying out additional display configurations

In the **Display** submenu you can set all the parameters associated with the configuration of the local display.

Navigation
"Setup" menu → Advanced setup → Display

▶ Display	
Format display	→ 113
Value 1 display	→ 113
0% bargraph value 1	→ 113
100% bargraph value 1	→ 113
Decimal places 1	→ 113
Value 2 display	→ 113
Decimal places 2	→ 113
Value 3 display	→ 113
0% bargraph value 3	→ 114
100% bargraph value 3	→ 114
Decimal places 3	→ 114
Value 4 display	→ 114
Decimal places 4	→ 114
Display language	→ 114
Display interval	→ 114
Display damping	→ 114
Header	→ 114
Header text	→ 114
Separator	→ 115
Backlight	→ 115

Parameter overview with brief description

Parameter	Prerequisite	Description	Selection / User entry	Factory setting
Format display	A local display is provided.	Select how measured values are shown on the display.	▪ 1 value, max. size ▪ 1 bargraph + 1 value ▪ 2 values ▪ 1 value large + 2 values ▪ 4 values	1 value, max. size
Value 1 display	A local display is provided.	Select the measured value that is shown on the local display.	▪ Volume flow ▪ Mass flow ▪ Corrected volume flow ▪ Flow velocity ▪ Corrected conductivity * ▪ Totalizer 1 ▪ Totalizer 2 ▪ Totalizer 3 ▪ Current output 1 * ▪ Current output 2 * ▪ Current output 3 * ▪ Current output 4 * ▪ Temperature * ▪ Electronics temperature ▪ HBSI * ▪ Noise * ▪ Coil current shot time * ▪ Reference electrode potential against PE * ▪ Build-up index * ▪ Test point 1 ▪ Test point 2 ▪ Test point 3	Volume flow
0% bargraph value 1	A local display is provided.	Enter 0% value for bar graph display.	Signed floating-point number	Country-specific: ▪ 0 l/h ▪ 0 gal/min (us)
100% bargraph value 1	A local display is provided.	Enter 100% value for bar graph display.	Signed floating-point number	Depends on country and nominal diameter
Decimal places 1	A measured value is specified in the **Value 1 display** parameter.	Select the number of decimal places for the display value.	▪ x ▪ x.x ▪ x.xx ▪ x.xxx ▪ x.xxxx	x.xx
Value 2 display	A local display is provided.	Select the measured value that is shown on the local display.	For the picklist, see the **Value 1 display** parameter (→ 🗎 113)	None
Decimal places 2	A measured value is specified in the **Value 2 display** parameter.	Select the number of decimal places for the display value.	▪ x ▪ x.x ▪ x.xx ▪ x.xxx ▪ x.xxxx	x.xx
Value 3 display	A local display is provided.	Select the measured value that is shown on the local display.	For the picklist, see the **Value 1 display** parameter (→ 🗎 113)	None

Parameter	Prerequisite	Description	Selection / User entry	Factory setting
0% bargraph value 3	A selection was made in the **Value 3 display** parameter.	Enter 0% value for bar graph display.	Signed floating-point number	Country-specific: ▪ 0 l/h ▪ 0 gal/min (us)
100% bargraph value 3	A selection was made in the **Value 3 display** parameter.	Enter 100% value for bar graph display.	Signed floating-point number	0
Decimal places 3	A measured value is specified in the **Value 3 display** parameter.	Select the number of decimal places for the display value.	▪ x ▪ x.x ▪ x.xx ▪ x.xxx ▪ x.xxxx	x.xx
Value 4 display	A local display is provided.	Select the measured value that is shown on the local display.	For the picklist, see the **Value 1 display** parameter (→ 🗎 113)	None
Decimal places 4	A measured value is specified in the **Value 4 display** parameter.	Select the number of decimal places for the display value.	▪ x ▪ x.x ▪ x.xx ▪ x.xxx ▪ x.xxxx	x.xx
Display language	A local display is provided.	Set display language.	▪ English ▪ Deutsch ▪ Français ▪ Español ▪ Italiano ▪ Nederlands ▪ Portuguesa ▪ Polski ▪ русский язык (Russian) ▪ Svenska ▪ Türkçe ▪ 中文 (Chinese) ▪ 日本語 (Japanese) ▪ 한국어 (Korean) ▪ tiếng Việt (Vietnamese) ▪ čeština (Czech)	English (alternatively, the ordered language is preset in the device)
Display interval	A local display is provided.	Set time measured values are shown on display if display alternates between values.	1 to 10 s	5 s
Display damping	A local display is provided.	Set display reaction time to fluctuations in the measured value.	0.0 to 999.9 s	0.0 s
Header	A local display is provided.	Select header contents on local display.	▪ Device tag ▪ Free text	Device tag
Header text	The **Free text** option is selected in the **Header** parameter.	Enter display header text.	Max. 12 characters, such as letters, numbers or special characters (e.g. @, %, /)	----------

Parameter	Prerequisite	Description	Selection / User entry	Factory setting
Separator	A local display is provided.	Select decimal separator for displaying numerical values.	▪ . (point) ▪ , (comma)	. (point)
Backlight	One of the following conditions is met: ▪ Order code for "Display; operation", option **F** "4-line, illum.; touch control" ▪ Order code for "Display; operation", option **G** "4-line, illum.; touch control +WLAN" ▪ Order code for "Display; operation", option **O** "Remote display 4-line illuminated; 10m/30ft cable; touch control"	Switch the local display backlight on and off.	▪ Disable ▪ Enable	Enable

* Visibility depends on order options or device settings

10.6.5 WLAN configuration

The **WLAN Settings** submenu guides the user systematically through all the parameters that have to be set for the WLAN configuration.

Navigation
"Setup" menu → Advanced setup → WLAN settings

▶ WLAN settings	
WLAN	→ 116
WLAN mode	→ 116
SSID name	→ 116
Network security	→ 116
Security identification	→ 116
User name	→ 116
WLAN password	→ 116
WLAN IP address	→ 116
WLAN passphrase	→ 116
Assign SSID name	→ 116
SSID name	→ 116

Connection state	→ 📄 117
Received signal strength	→ 📄 117

Parameter overview with brief description

Parameter	Prerequisite	Description	Selection / User entry / User interface	Factory setting
WLAN	–	Switch WLAN on and off.	▪ Disable ▪ Enable	Enable
WLAN mode	–	Select WLAN mode.	▪ WLAN access point ▪ WLAN Client	WLAN access point
SSID name	The client is activated.	Enter the user-defined SSID name (max. 32 characters).	–	–
Network security	–	Select the security type of the WLAN network.	▪ Unsecured ▪ WPA2-PSK ▪ EAP-PEAP with MSCHAPv2 * ▪ EAP-PEAP MSCHAPv2 no server authentic. * ▪ EAP-TLS *	WPA2-PSK
Security identification	–	Select security settings and download these settings via menu Data management > Security > WLAN.	▪ Trusted issuer certificate ▪ Device certificate ▪ Device private key	–
User name	–	Enter user name.	–	–
WLAN password	–	Enter WLAN password.	–	–
WLAN IP address	–	Enter IP address of the WLAN interface of the device.	4 octet: 0 to 255 (in the particular octet)	192.168.1.212
WLAN passphrase	The **WPA2-PSK** option is selected in the **Security type** parameter.	Enter the network key (8 to 32 characters). ℹ The network key supplied with the device should be changed during commissioning for security reasons.	8 to 32-digit character string comprising numbers, letters and special characters (without spaces)	Serial number of the measuring device (e.g. L100A802000)
Assign SSID name	–	Select which name will be used for SSID: device tag or user-defined name.	▪ Device tag ▪ User-defined	User-defined
SSID name	▪ The **User-defined** option is selected in the **Assign SSID name** parameter. ▪ The **WLAN access point** option is selected in the **WLAN mode** parameter.	Enter the user-defined SSID name (max. 32 characters). ℹ The user-defined SSID name may only be assigned once. If the SSID name is assigned more than once, the devices can interfere with one another.	Max. 32-digit character string comprising numbers, letters and special characters	EH_device designation_last 7 digits of the serial number (e.g. EH_Promag_300_A 802000)

Parameter	Prerequisite	Description	Selection / User entry / User interface	Factory setting
Connection state	–	Displays the connection status.	▪ Connected ▪ Not connected	Not connected
Received signal strength	–	Shows the received signal strength.	▪ Low ▪ Medium ▪ High	High

* Visibility depends on order options or device settings

10.6.6 Performing electrode cleaning

The **Electrode cleaning cycle** submenu contains the parameters that must be set for the configuration of electrode cleaning.

The submenu is only available if the device was ordered with electrode cleaning.

Navigation
"Setup" menu → Advanced setup → Electrode cleaning cycle

▶ **Electrode cleaning cycle**

Electrode cleaning cycle	→ 🗎 117
ECC duration	→ 🗎 117
ECC recovery time	→ 🗎 117
ECC interval	→ 🗎 118
ECC polarity	→ 🗎 118

Parameter overview with brief description

Parameter	Prerequisite	Description	Selection / User entry / User interface	Factory setting
Electrode cleaning cycle	For the following order code: "Application package", option **EC** "ECC electrode cleaning"	Switch electrode cleaning on or off.	▪ Off ▪ On	On
ECC duration	For the following order code: "Application package", option **EC** "ECC electrode cleaning"	Specify the duration of the cleaning phase of the cycle. Diag. msg. no. 530 is displayed until the cleaning phase and recovery phase are complete.	0.01 to 30 s	2 s
ECC recovery time	For the following order code: "Application package", option **EC** "ECC electrode cleaning"	Specify the maximum timespan after the cleaning phase for recovery before measurement resumes during which the output signal values are frozen.	1 to 600 s	60 s

Parameter	Prerequisite	Description	Selection / User entry / User interface	Factory setting
ECC interval	For the following order code: "Application package", option **EC** "ECC electrode cleaning"	Specify the interval between one cleaning cycle and the next.	0.5 to 168 h	0.5 h
ECC polarity	For the following order code: "Application package", option **EC** "ECC electrode cleaning"	Select the polarity of the electrode cleaning circuit.	▪ Positive ▪ Negative	Depends on the electrode material: ▪ Tantalum: **Negative** option ▪ Platinum, Alloy C22, stainless steel: **Positive** option

10.6.7 Performing Heartbeat basic setup

Heartbeat setup submenu guides the user systematically through all the parameters that can be used for the Heartbeat basic setup.

The wizard only appears if the device has the Heartbeat Verification +Monitoring application package.

Navigation

"Setup" menu → Advanced setup → Heartbeat setup

▶ **Heartbeat setup**	
▶ **Heartbeat base settings**	→ 📄 118

"Heartbeat base settings" submenu

Navigation

"Setup" menu → Advanced setup → Heartbeat setup → Heartbeat base settings

▶ **Heartbeat base settings**	
Plant operator (2754)	→ 📄 119
Location (2755)	→ 📄 119
Partially filled pipe (6465)	→ 📄 119

Parameter overview with brief description

Parameter	Description	User entry / Selection	Factory setting
Plant operator	Enter the plant operator.	Max. 32 characters such as letters, numbers or special characters (e.g. @, %, /)	–
Location	Enter the location.	Max. 32 characters such as letters, numbers or special characters (e.g. @, %, /)	–
Partially filled pipe	Indicate, if the measuring tube is partially filled during the verification process in order to avoid evaluating the EPD electrode cable.	▪ No ▪ Yes	No

10.6.8 Configuration management

After commissioning, you can save the current device configurationor restore the previous device configuration. The device configuration is managed via the **Configuration management** parameter.

Navigation
"Setup" menu → Advanced setup → Configuration backup

▶ Configuration backup	
Operating time	→ 119
Last backup	→ 119
Configuration management	→ 119
Backup state	→ 120
Comparison result	→ 120

Parameter overview with brief description

Parameter	Description	User interface / Selection	Factory setting
Operating time	Indicates how long the device has been in operation.	Days (d), hours (h), minutes (m) and seconds (s)	–
Last backup	Shows when the last data backup was saved to HistoROM backup.	Days (d), hours (h), minutes (m) and seconds (s)	–
Configuration management	Select action for managing the device data in the HistoROM backup.	▪ Cancel ▪ Execute backup ▪ Restore * ▪ Compare * ▪ Clear backup data	Cancel

Parameter	Description	User interface / Selection	Factory setting
Backup state	Shows the current status of data saving or restoring.	▪ None ▪ Backup in progress ▪ Restoring in progress ▪ Delete in progress ▪ Compare in progress ▪ Restoring failed ▪ Backup failed	None
Comparison result	Comparison of current device data with HistoROM backup.	▪ Settings identical ▪ Settings not identical ▪ No backup available ▪ Backup settings corrupt ▪ Check not done ▪ Dataset incompatible	Check not done

* Visibility depends on order options or device settings

Function scope of the "Configuration management" parameter

Options	Description
Cancel	No action is executed and the user exits the parameter.
Execute backup	A backup copy of the current device configuration is saved from the HistoROM backup to the memory of the device. The backup copy includes the transmitter data of the device.
Restore	The last backup copy of the device configuration is restored from the device memory to the device's HistoROM backup. The backup copy includes the transmitter data of the device.
Compare	The device configuration saved in the device memory is compared with the current device configuration of the HistoROM backup.
Clear backup data	The backup copy of the device configuration is deleted from the memory of the device.

HistoROM backup
A HistoROM is a "non-volatile" device memory in the form of an EEPROM.

While this action is in progress, the configuration cannot be edited via the local display and a message on the processing status appears on the display.

10.6.9 Using parameters for device administration

The **Administration** submenu systematically guides the user through all the parameters that can be used for device administration purposes.

Navigation

"Setup" menu → Advanced setup → Administration

▶ **Administration**	
▶ **Define access code**	→ 📄 121
▶ **Reset access code**	→ 📄 121
Device reset	→ 📄 122

Using the parameter to define the access code

Complete this wizard to specify an access code for the Maintenance role.

Navigation
"Setup" menu → Advanced setup → Administration → Define access code

▶ Define access code	
Define access code	→ 📄 121
Confirm access code	→ 📄 121

Parameter overview with brief description

Parameter	Description	User entry
Define access code	Restrict write-access to parameters to protect the configuration of the device against unintentional changes.	Max. 16-digit character string comprising numbers, letters and special characters
Confirm access code	Confirm the entered access code.	Max. 16-digit character string comprising numbers, letters and special characters

Using the parameter to reset the access code

Navigation
"Setup" menu → Advanced setup → Administration → Reset access code

▶ Reset access code	
Operating time	→ 📄 121
Reset access code	→ 📄 121

Parameter overview with brief description

Parameter	Description	User interface / User entry	Factory setting
Operating time	Indicates how long the device has been in operation.	Days (d), hours (h), minutes (m) and seconds (s)	–
Reset access code	Reset access code to factory settings. ℹ For a reset code, contact your Endress+Hauser service organization. The reset code can only be entered via: ▪ Web browser ▪ DeviceCare, FieldCare (via CDI-RJ45 service interface) ▪ Fieldbus	Character string comprising numbers, letters and special characters	0x00

Using the parameter to reset the device

Navigation
"Setup" menu → Advanced setup → Administration

Parameter overview with brief description

Parameter	Description	Selection	Factory setting
Device reset	Reset the device configuration - either entirely or in part - to a defined state.	▪ Cancel ▪ To delivery settings ▪ Restart device ▪ Restore S-DAT backup *	Cancel

* Visibility depends on order options or device settings

10.7 Simulation

Via the **Simulation** submenu, it is possible to simulate various process variables in the process and the device alarm mode and verify downstream signal chains (switching valves or closed-control loops). The simulation can be performed without a real measurement (no flow of medium through the device).

Navigation
"Diagnostics" menu → Simulation

▶ Simulation	
Assign simulation process variable	→ 📄 123
Process variable value	→ 📄 123
Current input 1 to n simulation	→ 📄 124
Value current input 1 to n	→ 📄 124
Status input 1 to n simulation	→ 📄 124
Input signal level 1 to n	→ 📄 124
Current output 1 to n simulation	→ 📄 123
Current output value	→ 📄 123
Frequency output 1 to n simulation	→ 📄 123
Frequency output 1 to n value	→ 📄 123
Pulse output simulation 1 to n	→ 📄 123
Pulse value 1 to n	→ 📄 123
Switch output simulation 1 to n	→ 📄 123
Switch state 1 to n	→ 📄 123
Relay output 1 to n simulation	→ 📄 123

Switch state 1 to n	→ 124
Device alarm simulation	→ 124
Diagnostic event category	→ 124
Diagnostic event simulation	→ 124

Parameter overview with brief description

Parameter	Prerequisite	Description	Selection / User entry	Factory setting
Assign simulation process variable	–	Select a process variable for the simulation process that is activated.	▪ Off ▪ Volume flow ▪ Mass flow ▪ Corrected volume flow ▪ Flow velocity ▪ Conductivity * ▪ Corrected conductivity * ▪ Temperature *	Off
Process variable value	A process variable is selected in the **Assign simulation process variable** parameter (→ 123).	Enter the simulation value for the selected process variable.	Depends on the process variable selected	0
Current output 1 to n simulation	–	Switch the simulation of the current output on and off.	▪ Off ▪ On	Off
Current output value	In the **Current output 1 to n simulation** parameter, the **On** option is selected.	Enter the current value for simulation.	3.59 to 22.5 mA	3.59 mA
Frequency output 1 to n simulation	In the **Operating mode** parameter, the **Frequency** option is selected.	Switch the simulation of the frequency output on and off.	▪ Off ▪ On	Off
Frequency output 1 to n value	In the **Frequency simulation 1 to n** parameter, the **On** option is selected.	Enter the frequency value for the simulation.	0.0 to 12 500.0 Hz	0.0 Hz
Pulse output simulation 1 to n	In the **Operating mode** parameter, the **Pulse** option is selected.	Set and switch off the pulse output simulation. For **Fixed value** option: **Pulse width** parameter (→ 97) defines the pulse width of the pulses output.	▪ Off ▪ Fixed value ▪ Down-counting value	Off
Pulse value 1 to n	In the **Pulse output simulation 1 to n** parameter, the **Down-counting value** option is selected.	Enter the number of pulses for simulation.	0 to 65 535	0
Switch output simulation 1 to n	In the **Operating mode** parameter, the **Switch** option is selected.	Switch the simulation of the switch output on and off.	▪ Off ▪ On	Off
Switch state 1 to n	–	Select the status of the status output for the simulation.	▪ Open ▪ Closed	Open
Relay output 1 to n simulation	–	Switch simulation of the relay output on and off.	▪ Off ▪ On	Off

Parameter	Prerequisite	Description	Selection / User entry	Factory setting
Switch state 1 to n	The **On** option is selected in the **Switch output simulation 1 to n** parameter parameter.	Select status of the relay output for the simulation.	▪ Open ▪ Closed	Open
Device alarm simulation	–	Switch the device alarm on and off.	▪ Off ▪ On	Off
Diagnostic event category	–	Select a diagnostic event category.	▪ Sensor ▪ Electronics ▪ Configuration ▪ Process	Process
Diagnostic event simulation	–	Select a diagnostic event to simulate this event.	▪ Off ▪ Diagnostic event picklist (depends on the category selected)	Off
Current input 1 to n simulation	–	Switch simulation of the current input on and off.	▪ Off ▪ On	Off
Value current input 1 to n	In the **Current input 1 to n simulation** parameter, the **On** option is selected.	Enter the current value for simulation.	0 to 22.5 mA	0 mA
Status input 1 to n simulation	–	Switch simulation of the status input on and off.	▪ Off ▪ On	Off
Input signal level 1 to n	In the **Status input simulation** parameter, the **On** option is selected.	Select the signal level for the simulation of the status input.	▪ High ▪ Low	High

* Visibility depends on order options or device settings

10.8 Protecting settings from unauthorized access

The following write protection options exist in order to protect the configuration of the measuring device from unintentional modification:
- Protect access to parameters via access code → 📄 124
- Protect access to local operation via key locking → 📄 58
- Protect access to measuring device via write protection switch → 📄 126

10.8.1 Write protection via access code

The effects of the user-specific access code are as follows:
- Via local operation, the parameters for the measuring device configuration are write-protected and their values can no longer be changed.
- Device access is protected via the Web browser, as are the parameters for the measuring device configuration.
- Device access is protected via FieldCare or DeviceCare (via CDI-RJ45 service interface), as are the parameters for the measuring device configuration.

Defining the access code via local display

1. Navigate to the **Define access code** parameter (→ 📄 121).
2. Define a max. 16-digit character string comprising numbers, letters and special characters as the access code.
3. Enter the access code again in the **Confirm access code** parameter (→ 📄 121) to confirm the code.
   ↳ The 🔒-symbol appears in front of all write-protected parameters.

The device automatically locks the write-protected parameters again if a key is not pressed for 10 minutes in the navigation and editing view. The device locks the write-protected

parameters automatically after 60 s if the user skips back to the operational display mode from the navigation and editing view.

- If parameter write protection is activated via an access code, it can also only be deactivated via this access code → 📄 57.
- The user role with which the user is currently logged on via the local display → 📄 57 is indicated by the **Access status** parameter. Navigation path: Operation → Access status

Parameters which can always be modified via the local display

Certain parameters that do not affect the measurement are excepted from parameter write protection via the local display. Despite the user-specific access code, they can always be modified, even if the other parameters are locked.

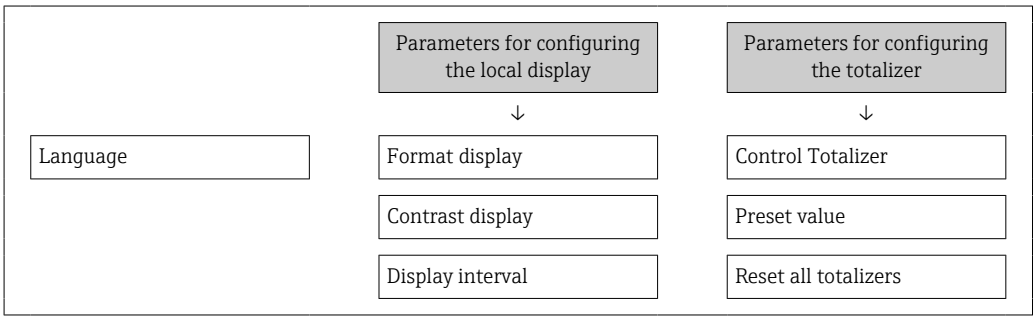

Defining the access code via the Web browser

1. Navigate to the **Define access code** parameter (→ 📄 121).
2. Define a max. 16-digit numeric code as an access code.
3. Enter the access code again in the **Confirm access code** parameter (→ 📄 121) to confirm the code.
   ↳ The Web browser switches to the login page.

If no action is performed for 10 minutes, the Web browser automatically returns to the login page.

- If parameter write protection is activated via an access code, it can also only be deactivated via this access code → 📄 57.
- The user role with which the user is currently logged on via Web browser is indicated by the **Access status** parameter. Navigation path: Operation → Access status

Resetting the access code

If you misplace the user-specific access code, it is possible to reset the code to the factory setting. A reset code must be entered for this purpose. The user-specific access code can then be defined again afterwards.

Via Web browser, FieldCare, DeviceCare (via CDI-RJ45 service interface), fieldbus

You can only obtain a reset code from your local Endress+Hauser service organization. The code must be calculated explicitly for every device.

1. Note down the serial number of the device.
2. Read off the **Operating time** parameter.
3. Contact the local Endress+Hauser service organization and tell them the serial number and the operating time.
   ↳ Get the calculated reset code.

4. Enter the reset code in the **Reset access code** parameter (→ 121).
   ↳ The access code has been reset to the factory setting **0000**. It can be redefined → 124.

For IT security reasons, the calculated reset code is only valid for 96 hours from the specified operating time and for the specific serial number. If you cannot return to the device within 96 hours, you should either increase the operating time you read out by a few days or switch off the device.

10.8.2 Write protection via write protection switch

Unlike parameter write protection via a user-specific access code, this allows the user to lock write access to the entire operating menu - apart from the **"Contrast display" parameter**.

The parameter values are now read only and cannot be edited any more (exception **"Contrast display" parameter**):
- Via local display
- Via PROFINET protocol

1.

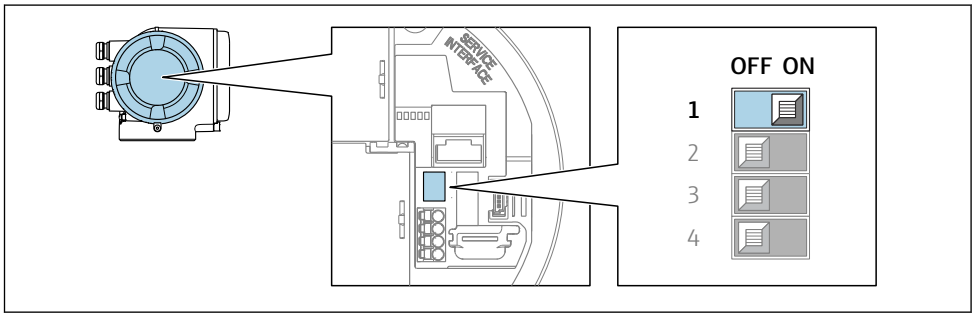

A0029630

Setting the write protection (WP) switch on the main electronics module to the **ON** position enables hardware write protection.
   ↳ In the **Locking status** parameter, the **Hardware locked** option is displayed → 127. In addition, on the local display the 🔒 symbol appears in front of the parameters in the header of the operational display and in the navigation view.

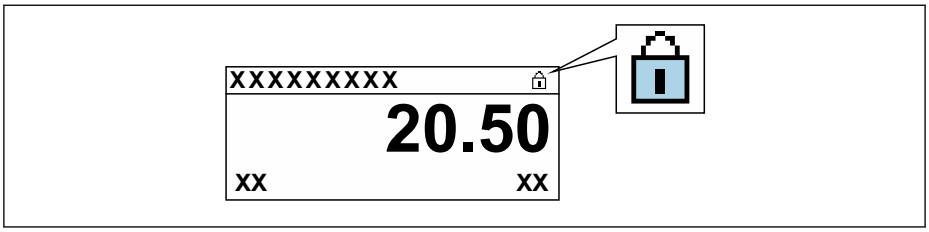

A0029425

2. Setting the write protection (WP) switch on the main electronics module to the **OFF** position (factory setting) disables hardware write protection.
   ↳ No option is displayed in the **Locking status** parameter → 127. On the local display, the 🔒 symbol disappears from in front of the parameters in the header of the operational display and in the navigation view.

11 Operation

11.1 Reading off the device locking status

Device active write protection: **Locking status** parameter

Operation → Locking status

Function scope of the "Locking status" parameter

Options	Description
None	The access authorization displayed in the **Access status** parameter applies → 🗎 57. Only appears on local display.
Hardware locked	The DIP switch for hardware locking is activated on the PCB board. This locks write access to the parameters (e.g. via local display or operating tool) → 🗎 126.
Temporarily locked	Write access to the parameters is temporarily locked on account of internal processes running in the device (e.g. data upload/download, reset, etc.). Once the internal processing has been completed, the parameters can be changed once again.

11.2 Adjusting the operating language

Detailed information:
- To configure the operating language → 🗎 83
- For information on the operating languages supported by the measuring device → 🗎 198

11.3 Configuring the display

Detailed information:
- On the basic settings for the local display
- On the advanced settings for the local display → 🗎 112

11.4 Reading measured values

With the **Measured values** submenu, it is possible to read all the measured values.

Navigation
"Diagnostics" menu → Measured values

▶ **Measured values**	
▶ **Process variables**	→ 🗎 128
▶ **Totalizer**	→ 🗎 129
▶ **Input values**	→ 🗎 130
▶ **Output values**	→ 🗎 131

11.4.1 "Process variables" submenu

The **Process variables** submenu contains all the parameters needed to display the current measured values for each process variable.

Navigation
"Diagnostics" menu → Measured values → Process variables

▶ Process variables	
Volume flow	→ 128
Mass flow	→ 128
Corrected volume flow	→ 128
Flow velocity	→ 128
Conductivity	→ 128
Corrected conductivity	→ 129
Temperature	→ 129
Density	→ 129

Parameter overview with brief description

Parameter	Prerequisite	Description	User interface
Volume flow	–	Displays the volume flow that is currently measured. *Dependency* The unit is taken from: **Volume flow unit** parameter (→ 88)	Signed floating-point number
Mass flow	–	Displays the mass flow that is currently calculated. *Dependency* The unit is taken from the **Mass flow unit** parameter (→ 88).	Signed floating-point number
Corrected volume flow	–	Displays the corrected volume flow that is currently calculated. *Dependency* The unit is taken from: **Corrected volume flow unit** parameter (→ 89)	Signed floating-point number
Flow velocity	–	Displays the flow velocity that is currently calculated.	Signed floating-point number
Conductivity	–	Displays the conductivity that is currently measured. *Dependency* The unit is taken from the **Conductivity unit** parameter (→ 88).	Signed floating-point number

Parameter	Prerequisite	Description	User interface
Corrected conductivity	One of the following conditions is met: ▪ Order code for "Sensor option", option **CI** "Medium temperature measurement" or ▪ The temperature is read into the flowmeter from an external device.	Displays the conductivity that is currently corrected. *Dependency* The unit is taken from: **Conductivity unit** parameter (→ 🗎 88)	Positive floating-point number
Temperature	One of the following conditions is met: ▪ Order code for "Sensor option", option **CI** "Medium temperature measurement" or ▪ The temperature is read into the flowmeter from an external device.	Displays the temperature that is currently calculated. *Dependency* The unit is taken from: **Temperature unit** parameter (→ 🗎 88)	Positive floating-point number
Density	–	Displays the current fixed density or density read in from an external device. *Dependency* The unit is taken from the **Density unit** parameter.	Signed floating-point number

11.4.2 Totalizer

The **Totalizer** submenu contains all the parameters needed to display the current measured values for every totalizer.

Navigation

"Diagnostics" menu → Measured values → Totalizer

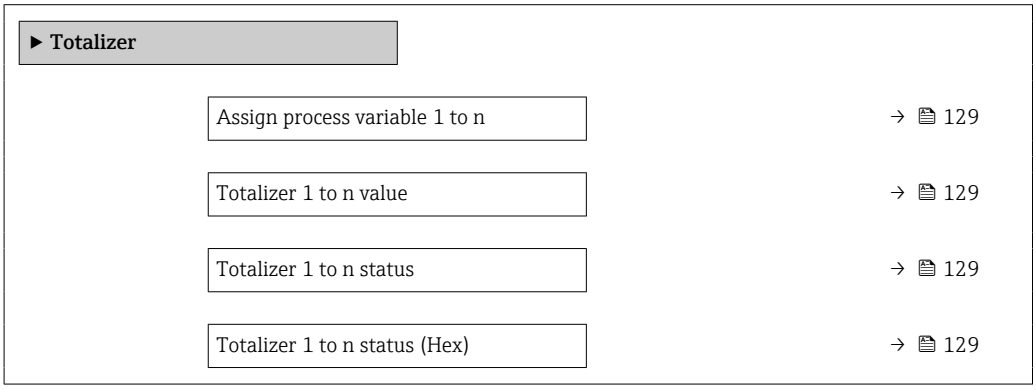

Parameter overview with brief description

Parameter	Description	Selection / User interface	Factory setting
Assign process variable 1 to n	Select process variable for totalizer.	▪ Volume flow ▪ Mass flow ▪ Corrected volume flow	Volume flow
Totalizer 1 to n value	Shows the totalizer value reported to the controller for further processing.	Signed floating-point number	0 l
Totalizer 1 to n status	Shows the status of the totalizer value reported to the controller for further processing ('Good', 'Uncertain', 'Bad').	▪ Good ▪ Uncertain ▪ Bad	Good
Totalizer 1 to n status (Hex)	Shows the status of the totalizer value reported to the controller for further processing (Hex).	0 to 255	128

11.4.3 "Input values" submenu

The **Input values** submenu guides you systematically to the individual input values.

Navigation
"Diagnostics" menu → Measured values → Input values

▶ **Input values**		
	▶ **Current input 1 to n**	→ 📄 130
	▶ **Status input 1 to n**	→ 📄 130

Input values of current input

The **Current input 1 to n** submenu contains all the parameters needed to display the current measured values for every current input.

Navigation
"Diagnostics" menu → Measured values → Input values → Current input 1 to n

▶ **Current input 1 to n**		
	Measured values 1 to n	→ 📄 130
	Measured current 1 to n	→ 📄 130

Parameter overview with brief description

Parameter	Description	User interface
Measured values 1 to n	Displays the current input value.	Signed floating-point number
Measured current 1 to n	Displays the current value of the current input.	0 to 22.5 mA

Input values of status input

The **Status input 1 to n** submenu contains all the parameters needed to display the current measured values for every status input.

Navigation
"Diagnostics" menu → Measured values → Input values → Status input 1 to n

▶ **Status input 1 to n**		
	Value status input	→ 📄 131

Parameter overview with brief description

Parameter	Description	User interface
Value status input	Shows the current input signal level.	▪ High ▪ Low

11.4.4 Output values

The **Output values** submenu contains all the parameters needed to display the current measured values for every output.

Navigation

"Diagnostics" menu → Measured values → Output values

▶ **Output values**		
	▶ **Current output 1 to n**	→ 📄 131
	▶ **Pulse/frequency/switch output 1 to n**	→ 📄 131
	▶ **Relay output 1 to n**	→ 📄 132

Output values of current output

The **Value current output** submenu contains all the parameters needed to display the current measured values for every current output.

Navigation

"Diagnostics" menu → Measured values → Output values → Value current output 1 to n

▶ **Current output 1 to n**		
	Output current	→ 📄 131
	Measured current	→ 📄 131

Parameter overview with brief description

Parameter	Description	User interface
Output current	Displays the current value currently calculated for the current output.	3.59 to 22.5 mA
Measured current	Displays the current value currently measured for the current output.	0 to 30 mA

Output values for pulse/frequency/switch output

The **Pulse/frequency/switch output 1 to n** submenu contains all the parameters needed to display the current measured values for every pulse/frequency/switch output.

Navigation

"Diagnostics" menu → Measured values → Output values → Pulse/frequency/switch output 1 to n

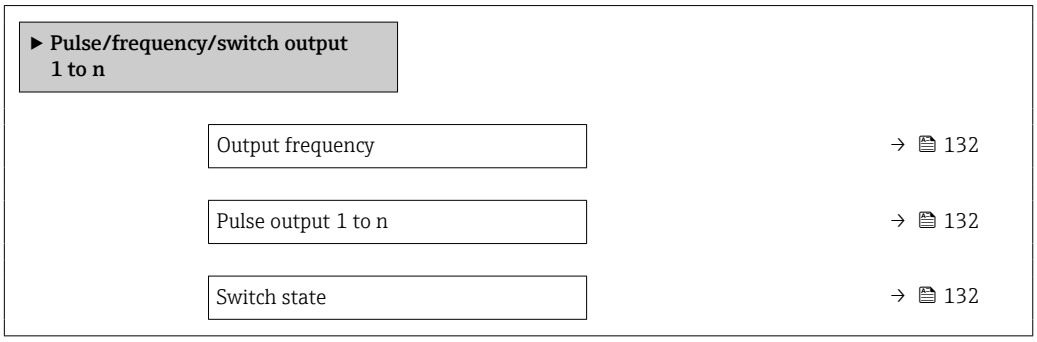

Parameter overview with brief description

Parameter	Prerequisite	Description	User interface
Output frequency	In the **Operating mode** parameter, the **Frequency** option is selected.	Displays the value currently measured for the frequency output.	0.0 to 12 500.0 Hz
Pulse output 1 to n	The **Pulse** option is selected in the **Operating mode** parameter parameter.	Displays the pulse frequency currently output.	Positive floating-point number
Switch state	The **Switch** option is selected in the **Operating mode** parameter.	Displays the current switch output status.	▪ Open ▪ Closed

Output values for relay output

The **Relay output 1 to n** submenu contains all the parameters needed to display the current measured values for every relay output.

Navigation

"Diagnostics" menu → Measured values → Output values → Relay output 1 to n

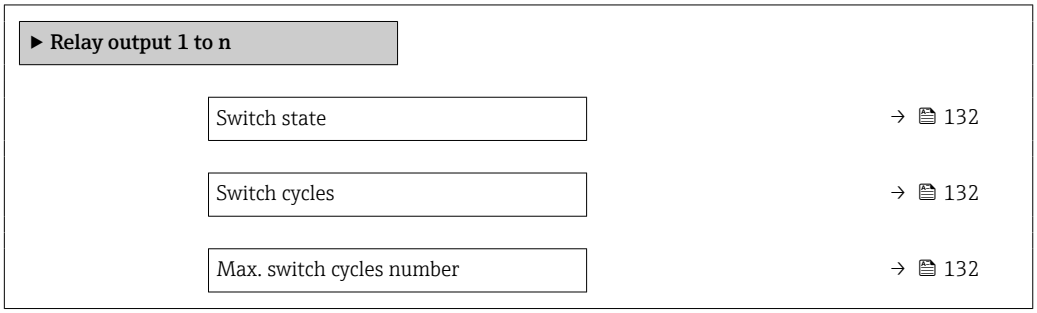

Parameter overview with brief description

Parameter	Description	User interface
Switch state	Shows the current relay switch status.	▪ Open ▪ Closed
Switch cycles	Shows number of all performed switch cycles.	Positive integer
Max. switch cycles number	Shows the maximal number of guaranteed switch cycles.	Positive integer

11.5 Adapting the measuring device to the process conditions

The following are available for this purpose:
- Basic settings using the**Setup** menu (→ 🗎 84)
- Advanced settings using the**Advanced setup** submenu (→ 🗎 109)

11.6 Performing a totalizer reset

The totalizers are reset in the **Operation** submenu:
- Control Totalizer
- Reset all totalizers

Navigation
"Operation" menu → Totalizer handling

▶ Totalizer handling	
Totalizer 1 to n control (11101–1 to n)	→ 🗎 133
Preset value 1 to n (11108–1 to n)	→ 🗎 133
Reset all totalizers (2806)	→ 🗎 133

Parameter overview with brief description

Parameter	Description	Selection / User entry	Factory setting
Totalizer 1 to n control	Operate the totalizer.	▪ Reset + hold ▪ Preset + hold ▪ Hold ▪ Totalize	Totalize
Preset value 1 to n	Specify start value for totalizer.	Signed floating-point number	0 l
Reset all totalizers	Reset all totalizers to 0 and start.	▪ Cancel ▪ Reset + totalize	Cancel

11.6.1 Function scope of "Control Totalizer" parameter

Options	Description
Totalize	The totalizer is started or continues running.
Reset + hold	The totaling process is stopped and the totalizer is reset to 0.
Preset + hold [1]	The totaling process is stopped and the totalizer is set to its defined start value from the **Preset value** parameter.
Reset + totalize	The totalizer is reset to 0 and the totaling process is restarted.
Preset + totalize [1]	The totalizer is set to the defined start value in the **Preset value** parameter and the totaling process is restarted.
Hold	Totalizing is stopped.

1) Visible depending on the order options or device settings

11.6.2 Function scope of the "Reset all totalizers" parameter

Options	Description
Cancel	No action is executed and the user exits the parameter.
Reset + totalize	Resets all totalizers to 0 and restarts the totaling process. This deletes all the flow values previously totalized.

11.7 Show data logging

The **Extended HistoROM** application package must be enabled in the device (order option) for the **Data logging** submenu to appear. This contains all the parameters for the measured value history.

Data logging is also available via:
- Plant Asset Management Tool FieldCare → 69.
- Web browser

Function scope
- A total of 1000 measured values can be stored
- 4 logging channels
- Adjustable logging interval for data logging
- Measured value trend for each logging channel displayed in the form of a chart

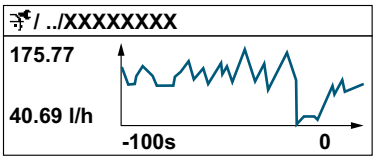

A0034352

- x-axis: depending on the number of channels selected displays 250 to 1000 measured values of a process variable.
- y-axis: displays the approximate measured value span and constantly adapts this to the ongoing measurement.

If the length of the logging interval or the assignment of the process variables to the channels is changed, the content of the data logging is deleted.

Navigation
"Diagnostics" menu → Data logging

▶ Data logging	
Assign channel 1	→ 135
Assign channel 2	→ 135
Assign channel 3	→ 135
Assign channel 4	→ 136
Logging interval	→ 136
Clear logging data	→ 136

Data logging	→ 136
Logging delay	→ 136
Data logging control	→ 136
Data logging status	→ 136
Entire logging duration	→ 136

Parameter overview with brief description

Parameter	Prerequisite	Description	Selection / User entry / User interface	Factory setting
Assign channel 1	The **Extended HistoROM** application package is available.	Assign process variable to logging channel.	▪ Off ▪ Volume flow ▪ Mass flow ▪ Corrected volume flow ▪ Flow velocity ▪ Conductivity * ▪ Corrected conductivity * ▪ Temperature * ▪ Electronics temperature ▪ Current output 1 * ▪ Current output 2 * ▪ Current output 3 * ▪ Current output 4 * ▪ Noise * ▪ Coil current shot time * ▪ Reference electrode potential against PE * ▪ HBSI * ▪ Build-up index * ▪ Test point 1 ▪ Test point 2 ▪ Test point 3	Off
Assign channel 2	The **Extended HistoROM** application package is available. The software options currently enabled are displayed in the **Software option overview** parameter.	Assign a process variable to logging channel.	For the picklist, see the **Assign channel 1** parameter (→ 135)	Off
Assign channel 3	The **Extended HistoROM** application package is available. The software options currently enabled are displayed in the **Software option overview** parameter.	Assign a process variable to logging channel.	For the picklist, see the **Assign channel 1** parameter (→ 135)	Off

Parameter	Prerequisite	Description	Selection / User entry / User interface	Factory setting
Assign channel 4	The **Extended HistoROM** application package is available. The software options currently enabled are displayed in the **Software option overview** parameter.	Assign a process variable to logging channel.	For the picklist, see the **Assign channel 1** parameter (→ 135)	Off
Logging interval	The **Extended HistoROM** application package is available.	Define the logging interval for data logging. This value defines the time interval between the individual data points in the memory.	0.1 to 3 600.0 s	1.0 s
Clear logging data	The **Extended HistoROM** application package is available.	Clear the entire logging data.	▪ Cancel ▪ Clear data	Cancel
Data logging	–	Select the type of data logging.	▪ Overwriting ▪ Not overwriting	Overwriting
Logging delay	In the **Data logging** parameter, the **Not overwriting** option is selected.	Enter the time delay for measured value logging.	0 to 999 h	0 h
Data logging control	In the **Data logging** parameter, the **Not overwriting** option is selected.	Start and stop measured value logging.	▪ None ▪ Delete + start ▪ Stop	None
Data logging status	In the **Data logging** parameter, the **Not overwriting** option is selected.	Displays the measured value logging status.	▪ Done ▪ Delay active ▪ Active ▪ Stopped	Done
Entire logging duration	In the **Data logging** parameter, the **Not overwriting** option is selected.	Displays the total logging duration.	Positive floating-point number	0 s

* Visibility depends on order options or device settings

12 Diagnostics and troubleshooting

12.1 General troubleshooting

For local display

Error	Possible causes	Remedy
Local display dark and no output signals	Supply voltage does not match that specified on the nameplate.	Apply the correct supply voltage .
Local display dark and no output signals	The polarity of the supply voltage is wrong.	Correct the polarity.
Local display dark and no output signals	No contact between connecting cables and terminals.	Check the connection of the cables and correct if necessary.
Local display dark and no output signals	Terminals are not plugged into the I/O electronics module correctly. Terminals are not plugged into the main electronics module correctly.	Check terminals.
Local display dark and no output signals	I/O electronics module is defective. Main electronics module is defective.	Order spare part → 🗎 174.
Local display is dark, but signal output is within the valid range	Display is set too bright or too dark.	▪ Set the display brighter by simultaneously pressing ⊞ + Ⓔ. ▪ Set the display darker by simultaneously pressing ⊟ + Ⓔ.
Local display is dark, but signal output is within the valid range	The cable of the display module is not plugged in correctly.	Insert the plug correctly into the main electronics module and display module.
Local display is dark, but signal output is within the valid range	Display module is defective.	Order spare part → 🗎 174.
Backlighting of local display is red	Diagnostic event with "Alarm" diagnostic behavior has occurred.	Take remedial measures → 🗎 147
Text on local display appears in a foreign language and cannot be understood.	Incorrect operating language is configured.	1. Press 2 s ⊟ + ⊞ ("home position"). 2. Press Ⓔ. 3. Set the desired language in the **Display language** parameter (→ 🗎 114).
Message on local display: "Communication Error" "Check Electronics"	Communication between the display module and the electronics is interrupted.	▪ Check the cable and the connector between the main electronics module and display module. ▪ Order spare part → 🗎 174.

For output signals

Error	Possible causes	Remedial action
Signal output outside the valid range	Main electronics module is defective.	Order spare part → 🗎 174.
Device shows correct value on local display, but signal output is incorrect, though in the valid range.	Parametrization errors	Check parameterization and correct it.
Device measures incorrectly.	Configuration error or device is operated outside the application.	1. Check and correct parameter configuration. 2. Observe limit values specified in the "Technical Data".

For access

Problem	Possible causes	Remedy
No write access to parameters.	Hardware write protection is enabled.	Set the write protection switch on the main electronics module to the **OFF** position → 🗎 126.
No write access to parameters.	Current user role has limited access authorization.	1. Check user role → 🗎 57. 2. Enter correct customer-specific access code → 🗎 57.
No connection to web server.	Web server is disabled.	Using the "FieldCare" or "DeviceCare" operating tool, check whether the Web server of the measuring device is enabled, and enable it if necessary→ 🗎 65.
	Incorrect settings for the Ethernet interface of the computer.	1. Check the properties of the Internet protocol (TCP/IP) → 🗎 61→ 🗎 61. 2. Check the network settings with the IT manager.
No connection to web server.	Incorrect WLAN access data.	▪ Check WLAN network status. ▪ Log on to the device again using WLAN access data. ▪ Check that WLAN is enabled on the measuring device and operating device → 🗎 61.
	WLAN communication is disabled.	–
Not connecting to web server, FieldCare or DeviceCare.	No WLAN network available.	▪ Check if WLAN reception is present: LED on display module is lit blue ▪ Check if WLAN connection is enabled: LED on display module flashes blue ▪ Switch on instrument function.
Network connection not present or unstable.	WLAN network is weak.	▪ Operating device is outside of reception range: Check network status on operating device. ▪ To improve network performance, use an external WLAN antenna.
	Parallel WLAN and Ethernet communication.	▪ Check network settings. ▪ Temporarily enable only the WLAN as an interface.
Web browser is frozen and operation no longer possible.	Data transfer is active.	Wait until data transfer or current action is finished.
	Connection lost	1. Check cable connection and power supply. 2. Refresh the Web browser and restart if necessary.
Content of web browser is incomplete or difficult to read.	Not using optimum version of Web server.	1. Use the correct Web browser version → 🗎 59. 2. Clear the Web browser cache and restart the Web browser.
	Unsuitable view settings.	Change the font size/display ratio of the Web browser.
No or incomplete display of contents in the web browser.	▪ JavaScript is not enabled ▪ JavaScript cannot be enabled	1. Enable JavaScript. 2. Enter http://XXX.XXX.X.X.XX/servlet/basic.html as the IP address.
Operation with FieldCare or DeviceCare is not possible via CDI-RJ45 service interface (port 8000).	Firewall of computer or network is preventing communication.	Depending on the settings of the firewall used on the computer or in the network, the firewall must be adapted or disabled to allow FieldCare/DeviceCare access.
Flashing of firmware with FieldCare or DeviceCare via CDI-RJ45 service interface (via port 8000 or TFTP ports) is not possible.	Firewall of computer or network is preventing communication.	Depending on the settings of the firewall used on the computer or in the network, the firewall must be adapted or disabled to allow FieldCare/DeviceCare access.

For system integration

Error	Possible causes	Remedy
The PROFINET device name is not displayed correctly and contains coding.	A device name containing one or more underscores has been specified via the automation system.	Specify a correct device name (without underscores) via the automation system.

12.2 Diagnostic information via light emitting diodes

12.2.1 Transmitter

Different LEDs in the transmitter provide information on the device status.

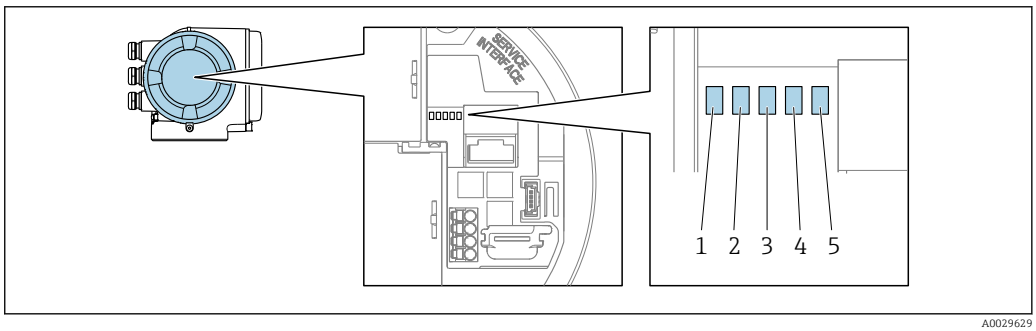

A0029629

1 *Supply voltage*
2 *Device status*
3 *Flashing/network status*
4 *Port 1 active: PROFINET with Ethernet-APL*
5 *Port 2 active: service interface (CDI)*

LED	Color	Meaning
1 Supply voltage	Off	Supply voltage is off or too low.
	Green	Supply voltage is ok.
2 Device status/module status (normal operation)	Off	Firmware error
	Green	Device status is ok.
	Flashing green	Device is not configured.
	Flashing red	A diagnostic event with "Warning" diagnostic behavior has occurred.
	Red	A diagnostic event with "Alarm" diagnostic behavior has occurred.
	Flashing red/green	The device restarts/self-test.
3 Flashing/network status	Green	Cyclic data exchange is active.
	Flashing green	Following request from automation system: Flash frequency: 1 Hz (flash functionality: 500 ms on, 500 ms off) If no "Name of Station" is defined: ▪ Flash frequency: 4 Hz ▪ Display: no "Name of Station" available.
	Red	IP address is available but there is no connection to the automation system
	Flashing red	Cyclic data exchange was active but the connection was disconnected: Flash frequency: 3 Hz

LED		Color	Meaning
4	Port 1 active: PROFINET with Ethernet-APL	Off	Not connected or no connection established.
		White	Connection available, no active communication
		Flashing white	Connection with active communication
5	Port 2 active: Service interface (CDI-RJ45)	Off	Not connected or no connection established.
		Amber	Connection available but no activity.
		Flashing amber	Activity present.

12.3 Diagnostic information on local display

12.3.1 Diagnostic message

Faults detected by the self-monitoring system of the measuring device are displayed as a diagnostic message in alternation with the operational display.

Operational display in alarm condition	Diagnostic message

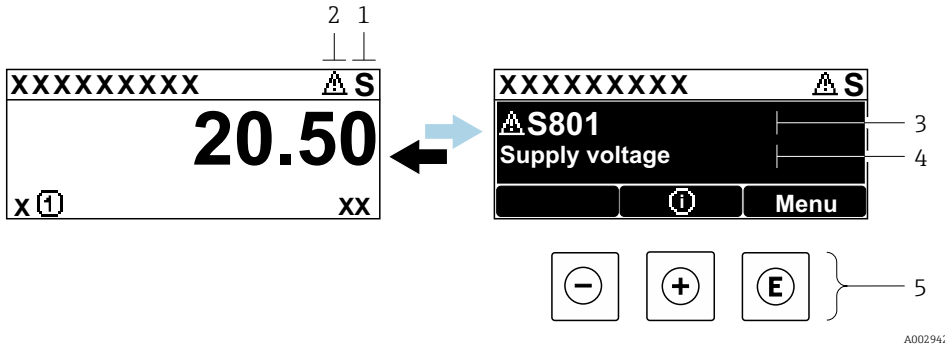

1 *Status signal*
2 *Diagnostic behavior*
3 *Diagnostic behavior with diagnostic code*
4 *Short text*
5 *Operating elements*

If two or more diagnostic events are pending simultaneously, only the message of the diagnostic event with the highest priority is shown.

Other diagnostic events that have occurred can be displayed in the **Diagnostics** menu:
- Via parameter → 📄 166
- Via submenus → 📄 167

Status signals

The status signals provide information on the state and reliability of the device by categorizing the cause of the diagnostic information (diagnostic event).

The status signals are categorized according to VDI/VDE 2650 and NAMUR Recommendation NE 107: F = Failure, C = Function Check, S = Out of Specification, M = Maintenance Required

Symbol	Meaning
F	**Failure** A device error has occurred. The measured value is no longer valid.
C	**Function check** The device is in service mode (e.g. during a simulation).
S	**Out of specification** The device is operated: Outside its technical specification limits (e.g. outside the process temperature range)
M	**Maintenance required** Maintenance is required. The measured value remains valid.

Diagnostic behavior

Symbol	Meaning
	Alarm ▪ Measurement is interrupted. ▪ Signal outputs and totalizers assume the defined alarm condition. ▪ A diagnostic message is generated.
	Warning Measurement is resumed. The signal outputs and totalizers are not affected. A diagnostic message is generated.

Diagnostic information

The fault can be identified using the diagnostic information. The short text helps you by providing information about the fault. In addition, the corresponding symbol for the diagnostic behavior is displayed in front of the diagnostic information on the local display.

Operating elements

Key	Meaning
	Plus key *In a menu, submenu* Opens the message about remedy information.
	Enter key *In a menu, submenu* Opens the operating menu.

12.3.2 Calling up remedial measures

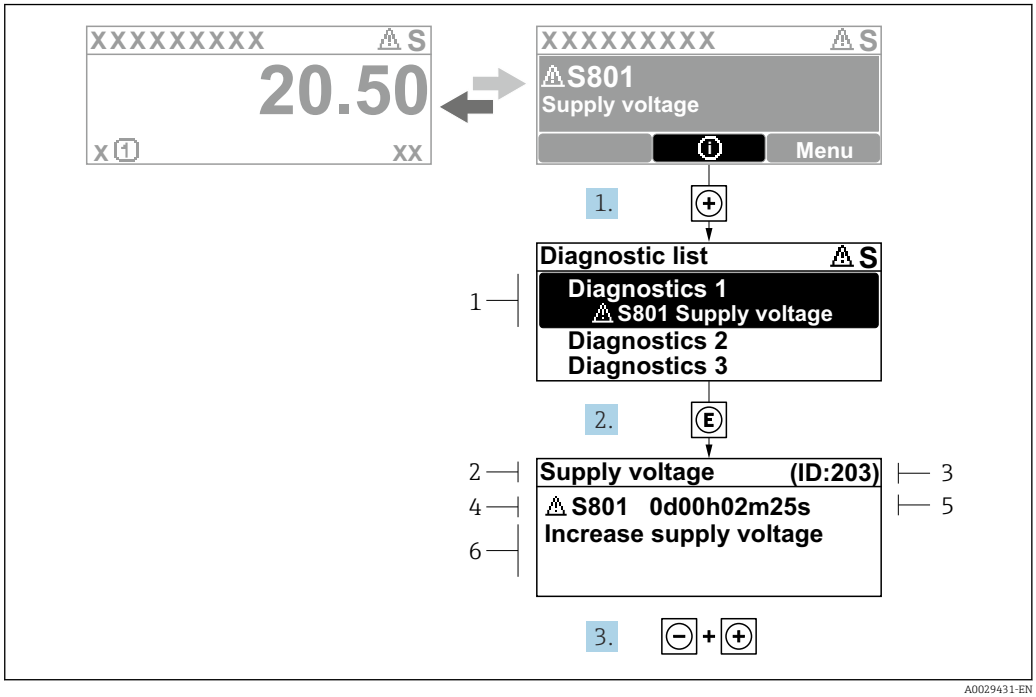

25 *Message for remedial measures*

1 *Diagnostic information*
2 *Short text*
3 *Service ID*
4 *Diagnostic behavior with diagnostic code*
5 *Operation time when error occurred*
6 *Remedial measures*

1. The user is in the diagnostic message.
   Press ⊞ (ⓘ symbol).
   ↳ The **Diagnostic list** submenu opens.
2. Select the desired diagnostic event with ⊞ or ⊟ and press Ⓔ .
   ↳ The message about the remedial measures opens.
3. Press ⊟ + ⊞ simultaneously.
   ↳ The message about the remedial measures closes.

The user is in the **Diagnostics** menu at an entry for a diagnostics event, e.g. in the **Diagnostic list** submenu or **Previous diagnostics** parameter.

1. Press Ⓔ.
   ↳ The message for the remedial measures for the selected diagnostic event opens.
2. Press ⊟ + ⊞ simultaneously.
   ↳ The message for the remedial measures closes.

12.4 Diagnostic information in the Web browser

12.4.1 Diagnostic options

Any faults detected by the measuring device are displayed in the Web browser on the home page once the user has logged on.

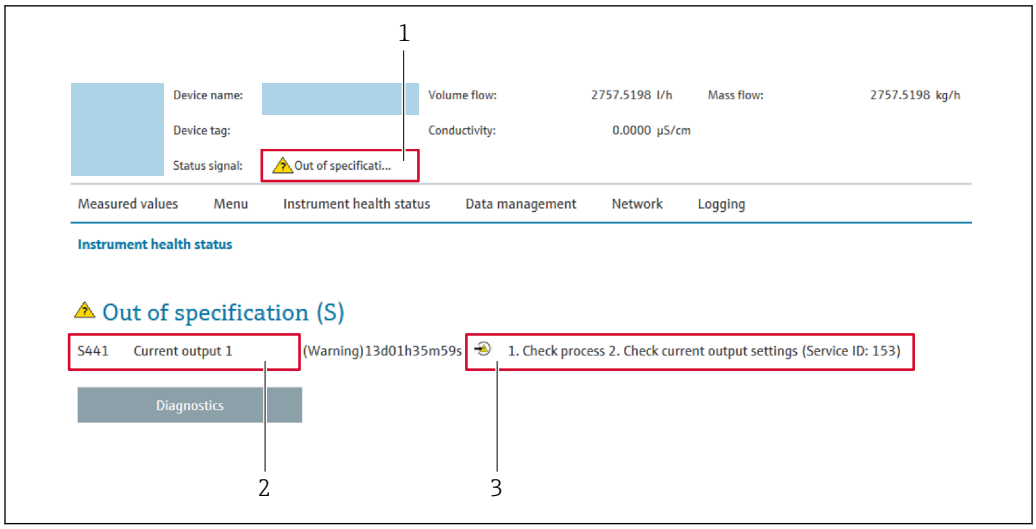

A0031056

1 *Status area with status signal*
2 *Diagnostic information*
3 *Remedial measures with service ID*

In addition, diagnostic events which have occurred can be shown in the **Diagnostics** menu:
- Via parameter → 166
- Via submenu → 167

Status signals

The status signals provide information on the state and reliability of the device by categorizing the cause of the diagnostic information (diagnostic event).

Symbol	Meaning
⊗	**Failure** A device error has occurred. The measured value is no longer valid.
	Function check The device is in the service mode (during a simulation, for example).
?	**Out of specification** The device is being operated: Outside its technical specification limits (e.g. outside the process temperature range)
	Maintenance required Maintenance is required. The measured value is still valid.

The status signals are categorized in accordance with VDI/VDE 2650 and NAMUR Recommendation NE 107.

12.4.2 Calling up remedy information

Remedy information is provided for every diagnostic event to ensure that problems can be rectified quickly. These measures are displayed in red along with the diagnostic event and the related diagnostic information.

12.5 Diagnostic information in FieldCare or DeviceCare

12.5.1 Diagnostic options

Any faults detected by the measuring device are displayed on the home page of the operating tool once the connection has been established.

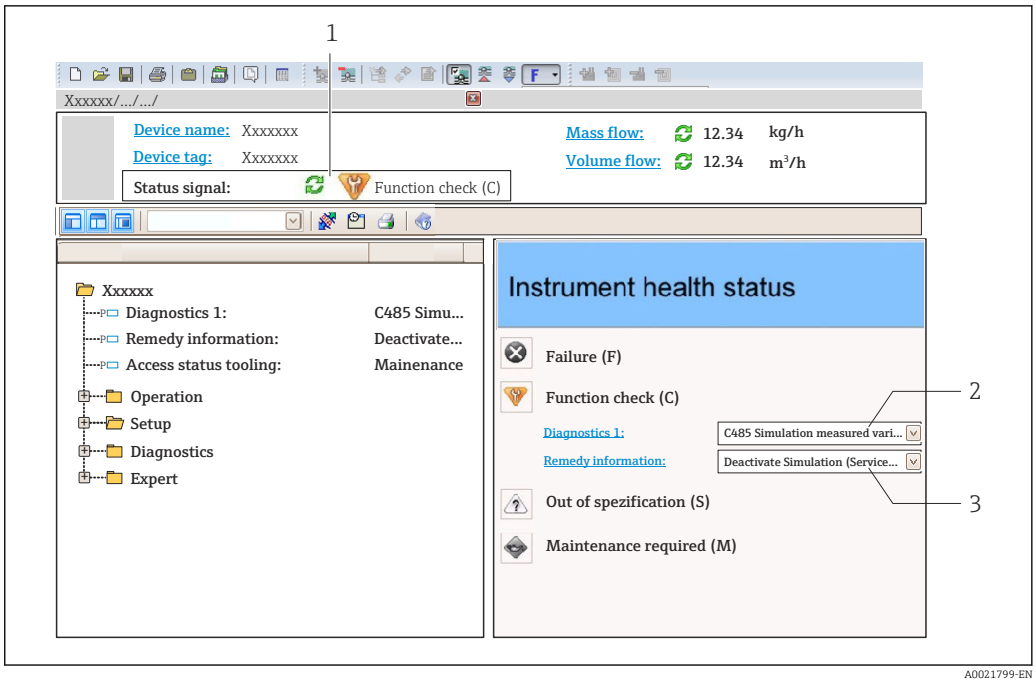

1 *Status area with status signal → 141*
2 *Diagnostics information → 142*
3 *Remedial measures with service ID*

In addition, diagnostic events which have occurred can be shown in the **Diagnostics** menu:
- Via parameter → 166
- Via submenu → 167

Diagnostic information

The fault can be identified using the diagnostic information. The short text helps you by providing information about the fault. In addition, the corresponding symbol for the diagnostic behavior is displayed in front of the diagnostic information on the local display.

12.5.2 Calling up remedy information

Remedy information is provided for every diagnostic event to ensure that problems can be rectified quickly:
- On the home page
  Remedy information is displayed in a separate field below the diagnostics information.
- In the **Diagnostics** menu
  Remedy information can be called up in the working area of the user interface.

The user is in the **Diagnostics** menu.

1. Call up the desired parameter.
2. On the right in the working area, mouse over the parameter.
   ↳ A tool tip with remedy information for the diagnostic event appears.

12.6 Adapting the diagnostic information

12.6.1 Adapting the diagnostic behavior

Each item of diagnostic information is assigned a specific diagnostic behavior at the factory. The user can change this assignment for specific diagnostic information in the **Diagnostic behavior** submenu.

Expert → System → Diagnostic handling → Diagnostic behavior

Available diagnostic behaviors

The following diagnostic behaviors can be assigned:

Diagnostic behavior	Description
Alarm	The device stops measurement. The totalizers assume the defined alarm condition. A diagnostic message is generated.
Warning	The device continues to measure. Measured value output via PROFINET and totalizers are not affected. A diagnostic message is generated.
Logbook entry only	The device continues to measure. The diagnostic message is only displayed in the **Event logbook** submenu (**Event list** submenu) and is not displayed in alternating sequence with the operational display.
Off	The diagnostic event is ignored, and no diagnostic message is generated or entered.

Displaying the measured value status

If modules with input data (e.g. Analog Input module, Discrete Input module, Totalizer module, Heartbeat module) are configured for cyclic data transmission, the measured value status is coded as per PROFINET PA Profile 4 Specification and transmitted along with the measured value to the PROFINET Controller via the status byte. The status byte is split into three segments: Quality, Quality Substatus and Limits.

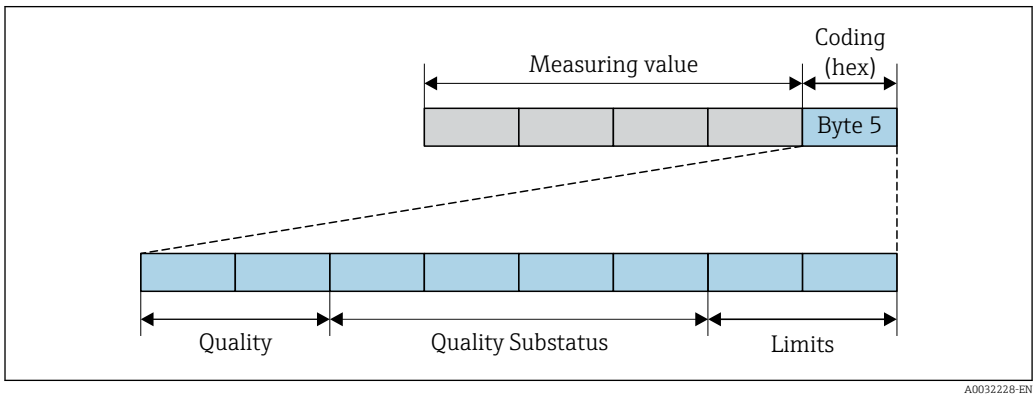

26 *Structure of the status byte*

The content of the status byte depends on the configured failure mode in the individual function block. Depending on which failure mode has been configured, status information in accordance with PROFINET PA Profile Specification 4 is transmitted to the the PROFINET with Ethernet-APL controller via the status byte status information. The two bits for the limits always have the value 0.

Supported status information

Status	Coding (hex)
BAD - Maintenance alarm	0x24 to 0x27
BAD - Process related	0x28 to 0x2B
BAD - Function check	0x3C to 0x3F
UNCERTAIN - Initial value	0x4C to 0x4F
UNCERTAIN - Maintenance demanded	0x68 to 0x6B
UNCERTAIN - Process related	0x78 to 0x7B
GOOD - OK	0x80 to 0x83
GOOD - Maintenance required	0xA4 to 0xA7
GOOD - Maintenance demanded	0xA8 to 0xAB
GOOD - Function check	0xBC to 0xBF

12.7 Overview of diagnostic information

The amount of diagnostic information and the number of measured variables affected increase if the measuring device has one or more application packages.

In the case of some items of diagnostic information, the diagnostic behavior can be changed. Adapting the diagnostic information → 146

12.7.1 Diagnostic of sensor

Diagnostic information			Remedy instructions	Influenced measured variables
No.	Short text			
043	Sensor 1 short circuit detected		1. Check sensor cable and sensor 2. Execute Heartbeat Verification 3. Replace sensor cable or sensor	▪ Conductivity ▪ Corrected conductivity ▪ Measured values ▪ Density ▪ Electronics temperature ▪ Flow velocity ▪ Mass flow ▪ **Corrected volume flow** option ▪ Temperature ▪ Volume flow
	Measured variable status [from the factory] [1]			
	Quality	Good		
	Quality substatus	Ok		
	Coding (hex)	0x80 to 0x83		
	Status signal	S		
	Diagnostic behavior	Warning		

1) Diagnostic behavior can be changed. This causes the overall status of the measured variable to change.

Diagnostic information			Remedy instructions	Influenced measured variables
No.	Short text			
082	Data storage inconsistent		Check module connections	▪ Conductivity ▪ Corrected conductivity ▪ Measured values ▪ Density ▪ Electronics temperature ▪ Flow velocity ▪ Mass flow ▪ **Corrected volume flow** option ▪ Temperature ▪ Volume flow
	Measured variable status			
	Quality	Good		
	Quality substatus	Ok		
	Coding (hex)	0x80 to 0x83		
	Status signal	F		
	Diagnostic behavior	Alarm		

Diagnostic information			Remedy instructions	Influenced measured variables
No.	Short text			
083	Memory content inconsistent		1. Restart device 2. Restore S-DAT data 3. Replace S-DAT	▪ Conductivity ▪ Corrected conductivity ▪ Measured values ▪ Density ▪ Electronics temperature ▪ Flow velocity ▪ Mass flow ▪ **Corrected volume flow** option ▪ Temperature ▪ Volume flow
	Measured variable status			
	Quality	Good		
	Quality substatus	Ok		
	Coding (hex)	0x80 to 0x83		
	Status signal	F		
	Diagnostic behavior	Alarm		

Diagnostic information			Remedy instructions	Influenced measured variables
No.	Short text			
143	HBSI limit exceeded		1. Check if external magnetic interference is present 2. Check flow value 3. Replace sensor	▪ Conductivity ▪ Corrected conductivity ▪ Measured values ▪ Density ▪ Electronics temperature ▪ Flow velocity ▪ Mass flow ▪ **Corrected volume flow** option ▪ Temperature ▪ Volume flow
	Measured variable status [from the factory] [1]			
	Quality	Good		
	Quality substatus	Ok		
	Coding (hex)	0x80 to 0x83		
	Status signal	M		
	Diagnostic behavior	Warning		

1) Diagnostic behavior can be changed. This causes the overall status of the measured variable to change.

Diagnostic information			Remedy instructions	Influenced measured variables
No.	Short text			
168	Build-up limit exceeded		Clean measuring tube	▪ Conductivity ▪ Corrected conductivity ▪ Measured values ▪ Density ▪ Electronics temperature ▪ Flow velocity ▪ Mass flow ▪ **Corrected volume flow** option ▪ Temperature ▪ Volume flow
	Measured variable status			
	Quality	Good		
	Quality substatus	Ok		
	Coding (hex)	0x80 to 0x83		
	Status signal	M		
	Diagnostic behavior	Warning		

Diagnostic information			Remedy instructions	Influenced measured variables
No.	Short text			
169	Conductivity measurement failed		1. Check grounding conditions 2. Deactivate conductivity measurement	▪ Conductivity ▪ Corrected conductivity ▪ Measured values ▪ Density ▪ Electronics temperature ▪ Flow velocity ▪ Mass flow ▪ **Corrected volume flow** option ▪ Temperature ▪ Volume flow
	Measured variable status			
	Quality	Good		
	Quality substatus	Ok		
	Coding (hex)	0x80 to 0x83		
	Status signal	M		
	Diagnostic behavior	Warning		

Diagnostic information			Remedy instructions	Influenced measured variables
No.	Short text			
170	Coil resistance faulty		Check ambient and process temperature	▪ Conductivity ▪ Corrected conductivity ▪ Measured values ▪ Density ▪ Electronics temperature ▪ Flow velocity ▪ Mass flow ▪ **Corrected volume flow** option ▪ Temperature ▪ Volume flow
	Measured variable status			
	Quality	Good		
	Quality substatus	Ok		
	Coding (hex)	0x80 to 0x83		
	Status signal	F		
	Diagnostic behavior	Alarm		

Diagnostic information			Remedy instructions	Influenced measured variables
No.	Short text			
180	Temperature sensor defective		1. Check sensor connections 2. Replace sensor cable or sensor 3. Turn off temperature measurement	▪ Conductivity ▪ Corrected conductivity ▪ Measured values ▪ Density ▪ Electronics temperature ▪ Flow velocity ▪ Mass flow ▪ **Corrected volume flow** option ▪ Temperature ▪ Volume flow
	Measured variable status			
	Quality	Good		
	Quality substatus	Ok		
	Coding (hex)	0x80 to 0x83		
	Status signal	F		
	Diagnostic behavior	Warning		

Diagnostic information			Remedy instructions	Influenced measured variables
No.	Short text			
181	Sensor connection faulty		1. Check sensor cable and sensor 2. Execute Heartbeat Verification 3. Replace sensor cable or sensor	▪ Conductivity ▪ Corrected conductivity ▪ Measured values ▪ Density ▪ Electronics temperature ▪ Flow velocity ▪ Mass flow ▪ **Corrected volume flow** option ▪ Temperature ▪ Volume flow
	Measured variable status			
	Quality	Good		
	Quality substatus	Ok		
	Coding (hex)	0x80 to 0x83		
	Status signal	F		
	Diagnostic behavior	Alarm		

12.7.2 Diagnostic of electronic

Diagnostic information			Remedy instructions	Influenced measured variables
No.	Short text			
201	Electronics faulty		1. Restart device 2. Replace electronics	▪ Conductivity ▪ Corrected conductivity ▪ Measured values ▪ Density ▪ Electronics temperature ▪ Flow velocity ▪ Mass flow ▪ **Corrected volume flow** option ▪ Temperature ▪ Volume flow
	Measured variable status			
	Quality	Good		
	Quality substatus	Ok		
	Coding (hex)	0x80 to 0x83		
	Status signal	F		
	Diagnostic behavior	Alarm		

Diagnostic information			Remedy instructions	Influenced measured variables
No.	Short text			
242	Firmware incompatible		1. Check firmware version 2. Flash or replace electronic module	▪ Conductivity ▪ Corrected conductivity ▪ Measured values ▪ Density ▪ Electronics temperature ▪ Flow velocity ▪ Mass flow ▪ **Corrected volume flow** option ▪ Temperature ▪ Volume flow
	Measured variable status			
	Quality	Good		
	Quality substatus	Ok		
	Coding (hex)	0x80 to 0x83		
	Status signal	F		
	Diagnostic behavior	Alarm		

Diagnostic information			Remedy instructions	Influenced measured variables
No.	Short text			
252	Module incompatible		1. Check electronic modules 2. Check if correct modules are available (e.g. NEx, Ex) 3. Replace electronic modules	▪ Conductivity ▪ Corrected conductivity ▪ Measured values ▪ Density ▪ Electronics temperature ▪ Flow velocity ▪ Mass flow ▪ **Corrected volume flow** option ▪ Temperature ▪ Volume flow
	Measured variable status			
	Quality	Good		
	Quality substatus	Ok		
	Coding (hex)	0x80 to 0x83		
	Status signal	F		
	Diagnostic behavior	Alarm		

Diagnostic information			Remedy instructions	Influenced measured variables
No.	Short text			
262	Module connection interrupted		1. Check or replace connection cable between sensor electronic module (ISEM) and main electronics 2. Check or replace ISEM or main electronics	▪ Conductivity ▪ Corrected conductivity ▪ Measured values ▪ Density ▪ Electronics temperature ▪ Flow velocity ▪ Mass flow ▪ **Corrected volume flow** option ▪ Temperature ▪ Volume flow
	Measured variable status			
	Quality	Good		
	Quality substatus	Ok		
	Coding (hex)	0x80 to 0x83		
	Status signal	F		
	Diagnostic behavior	Alarm		

Diagnostic information			Remedy instructions	Influenced measured variables
No.	Short text			
270	Main electronics defective		1. Restart device 2. Replace main electronic module	▪ Conductivity ▪ Corrected conductivity ▪ Measured values ▪ Density ▪ Electronics temperature ▪ Flow velocity ▪ Mass flow ▪ **Corrected volume flow** option ▪ Temperature ▪ Volume flow
	Measured variable status			
	Quality	Good		
	Quality substatus	Ok		
	Coding (hex)	0x80 to 0x83		
	Status signal	F		
	Diagnostic behavior	Alarm		

Diagnostic information			Remedy instructions	Influenced measured variables
No.	**Short text**			
271	Main electronics faulty		1. Restart device 2. Replace main electronic module	▪ Conductivity ▪ Corrected conductivity ▪ Measured values ▪ Density ▪ Electronics temperature ▪ Flow velocity ▪ Mass flow ▪ **Corrected volume flow** option ▪ Temperature ▪ Volume flow
	Measured variable status			
	Quality	Good		
	Quality substatus	Ok		
	Coding (hex)	0x80 to 0x83		
	Status signal	F		
	Diagnostic behavior	Alarm		

Diagnostic information			Remedy instructions	Influenced measured variables
No.	**Short text**			
272	Main electronics faulty		Restart device	▪ Conductivity ▪ Corrected conductivity ▪ Measured values ▪ Density ▪ Electronics temperature ▪ Flow velocity ▪ Mass flow ▪ **Corrected volume flow** option ▪ Temperature ▪ Volume flow
	Measured variable status			
	Quality	Good		
	Quality substatus	Ok		
	Coding (hex)	0x80 to 0x83		
	Status signal	F		
	Diagnostic behavior	Alarm		

Diagnostic information			Remedy instructions	Influenced measured variables
No.	**Short text**			
273	Main electronics defective		1. Pay attention to display emergency operation 2. Replace main electronics	▪ Conductivity ▪ Corrected conductivity ▪ Measured values ▪ Density ▪ Electronics temperature ▪ Flow velocity ▪ Mass flow ▪ **Corrected volume flow** option ▪ Temperature ▪ Volume flow
	Measured variable status			
	Quality	Good		
	Quality substatus	Ok		
	Coding (hex)	0x80 to 0x83		
	Status signal	F		
	Diagnostic behavior	Alarm		

Diagnostic information			Remedy instructions	Influenced measured variables
No.	**Short text**			
275	I/O module defective		Change I/O module	▪ Conductivity ▪ Corrected conductivity ▪ Measured values ▪ Density ▪ Electronics temperature ▪ Flow velocity ▪ Mass flow ▪ **Corrected volume flow** option ▪ Temperature ▪ Volume flow
	Measured variable status			
	Quality	Good		
	Quality substatus	Ok		
	Coding (hex)	0x80 to 0x83		
	Status signal	F		
	Diagnostic behavior	Alarm		

Diagnostic information			Remedy instructions	Influenced measured variables
No.	Short text			
276	I/O module faulty		1. Restart device 2. Change I/O module	▪ Conductivity ▪ Corrected conductivity ▪ Measured values ▪ Density ▪ Electronics temperature ▪ Flow velocity ▪ Mass flow ▪ **Corrected volume flow** option ▪ Temperature ▪ Volume flow
	Measured variable status			
	Quality	Good		
	Quality substatus	Ok		
	Coding (hex)	0x80 to 0x83		
	Status signal	F		
	Diagnostic behavior	Alarm		

Diagnostic information			Remedy instructions	Influenced measured variables
No.	Short text			
283	Memory content inconsistent		Restart device	▪ Conductivity ▪ Corrected conductivity ▪ Measured values ▪ Density ▪ Electronics temperature ▪ Flow velocity ▪ Mass flow ▪ **Corrected volume flow** option ▪ Temperature ▪ Volume flow
	Measured variable status			
	Quality	Good		
	Quality substatus	Ok		
	Coding (hex)	0x80 to 0x83		
	Status signal	F		
	Diagnostic behavior	Alarm		

Diagnostic information			Remedy instructions	Influenced measured variables
No.	Short text			
302	Device verification active		Device verification active, please wait.	▪ Conductivity ▪ Corrected conductivity ▪ Measured values ▪ Density ▪ Electronics temperature ▪ Flow velocity ▪ Mass flow ▪ **Corrected volume flow** option ▪ Temperature ▪ Volume flow
	Measured variable status [from the factory] [1]			
	Quality	Good		
	Quality substatus	Function check		
	Coding (hex)	0xBC to 0xBF		
	Status signal	C		
	Diagnostic behavior	Warning		

1) Diagnostic behavior can be changed. This causes the overall status of the measured variable to change.

Diagnostic information			Remedy instructions	Influenced measured variables
No.	Short text			
303	I/O 1 to n configuration changed		1. Apply I/O module configuration (parameter 'Apply I/O configuration') 2. Afterwards reload device description and check wiring	–
	Measured variable status			
	Quality	Good		
	Quality substatus	Ok		
	Coding (hex)	0x80 to 0x83		
	Status signal	M		
	Diagnostic behavior	Warning		

Diagnostic information			Remedy instructions	Influenced measured variables
No.	**Short text**			
311	Sensor electronics (ISEM) faulty		Maintenance required! Do not reset device	▪ Conductivity ▪ Corrected conductivity ▪ Measured values ▪ Density ▪ Electronics temperature ▪ Flow velocity ▪ Mass flow ▪ **Corrected volume flow** option ▪ Temperature ▪ Volume flow
	Measured variable status			
	Quality	Good		
	Quality substatus	Ok		
	Coding (hex)	0x80 to 0x83		
	Status signal	M		
	Diagnostic behavior	Warning		

Diagnostic information			Remedy instructions	Influenced measured variables
No.	**Short text**			
330	Flash file invalid		1. Update firmware of device 2. Restart device	▪ Conductivity ▪ Corrected conductivity ▪ Measured values ▪ Density ▪ Electronics temperature ▪ Flow velocity ▪ Mass flow ▪ **Corrected volume flow** option ▪ Temperature ▪ Volume flow
	Measured variable status			
	Quality	Good		
	Quality substatus	Ok		
	Coding (hex)	0x80 to 0x83		
	Status signal	M		
	Diagnostic behavior	Warning		

Diagnostic information			Remedy instructions	Influenced measured variables
No.	**Short text**			
331	Firmware update failed		1. Update firmware of device 2. Restart device	▪ Conductivity ▪ Corrected conductivity ▪ Measured values ▪ Density ▪ Electronics temperature ▪ Flow velocity ▪ Mass flow ▪ **Corrected volume flow** option ▪ Temperature ▪ Volume flow
	Measured variable status			
	Quality	Good		
	Quality substatus	Ok		
	Coding (hex)	0x80 to 0x83		
	Status signal	F		
	Diagnostic behavior	Warning		

Diagnostic information			Remedy instructions	Influenced measured variables
No.	**Short text**			
332	Writing in HistoROM backup failed		1. Replace user interface board 2. Ex d/XP: replace transmitter	▪ Conductivity ▪ Corrected conductivity ▪ Measured values ▪ Density ▪ Electronics temperature ▪ Flow velocity ▪ Mass flow ▪ **Corrected volume flow** option ▪ Temperature ▪ Volume flow
	Measured variable status			
	Quality	Good		
	Quality substatus	Ok		
	Coding (hex)	0x80 to 0x83		
	Status signal	F		
	Diagnostic behavior	Alarm		

Diagnostic information			Remedy instructions	Influenced measured variables
No.	Short text			
361	I/O module 1 to n faulty		1. Restart device 2. Check electronic modules 3. Change I/O module or main electronics	▪ Conductivity ▪ Corrected conductivity ▪ Measured values ▪ Density ▪ Electronics temperature ▪ Flow velocity ▪ Mass flow ▪ **Corrected volume flow** option ▪ Temperature ▪ Volume flow
	Measured variable status			
	Quality	Good		
	Quality substatus	Ok		
	Coding (hex)	0x80 to 0x83		
	Status signal	F		
	Diagnostic behavior	Alarm		

Diagnostic information			Remedy instructions	Influenced measured variables
No.	Short text			
372	Sensor electronics (ISEM) faulty		1. Restart device 2. Check if failure recurs 3. Replace sensor electronic module (ISEM)	▪ Conductivity ▪ Corrected conductivity ▪ Measured values ▪ Density ▪ Electronics temperature ▪ Flow velocity ▪ Mass flow ▪ **Corrected volume flow** option ▪ Temperature ▪ Volume flow
	Measured variable status			
	Quality	Good		
	Quality substatus	Ok		
	Coding (hex)	0x80 to 0x83		
	Status signal	F		
	Diagnostic behavior	Alarm		

Diagnostic information			Remedy instructions	Influenced measured variables
No.	Short text			
373	Sensor electronics (ISEM) faulty		Transfer data or reset device	▪ Conductivity ▪ Corrected conductivity ▪ Measured values ▪ Density ▪ Electronics temperature ▪ Flow velocity ▪ Mass flow ▪ **Corrected volume flow** option ▪ Temperature ▪ Volume flow
	Measured variable status			
	Quality	Good		
	Quality substatus	Ok		
	Coding (hex)	0x80 to 0x83		
	Status signal	F		
	Diagnostic behavior	Alarm		

Diagnostic information			Remedy instructions	Influenced measured variables
No.	Short text			
375	I/O- 1 to n communication failed		1. Restart device 2. Check if failure recurs 3. Replace module rack inclusive electronic modules	▪ Conductivity ▪ Corrected conductivity ▪ Measured values ▪ Density ▪ Electronics temperature ▪ Flow velocity ▪ Mass flow ▪ **Corrected volume flow** option ▪ Temperature ▪ Volume flow
	Measured variable status			
	Quality	Good		
	Quality substatus	Ok		
	Coding (hex)	0x80 to 0x83		
	Status signal	F		
	Diagnostic behavior	Alarm		

Diagnostic information			Remedy instructions	Influenced measured variables
No.	Short text			
376	Sensor electronics (ISEM) faulty		1. Replace sensor electronic module (ISEM) 2. Turn off diagnostic message	▪ Conductivity ▪ Corrected conductivity ▪ Measured values ▪ Density ▪ Electronics temperature ▪ Flow velocity ▪ Mass flow ▪ **Corrected volume flow** option ▪ Temperature ▪ Volume flow
	Measured variable status [from the factory] 1)			
	Quality	Good		
	Quality substatus	Ok		
	Coding (hex)	0x80 to 0x83		
	Status signal	S		
	Diagnostic behavior	Warning		

1) Diagnostic behavior can be changed. This causes the overall status of the measured variable to change.

Diagnostic information			Remedy instructions	Influenced measured variables
No.	Short text			
377	Electrode signal faulty		1. Activate empty pipe detection 2. Check partial filled pipe and installation direction 3. Check sensor cabling 4. Deactivate diagnostics 377	▪ Conductivity ▪ Corrected conductivity ▪ Measured values ▪ Density ▪ Electronics temperature ▪ Flow velocity ▪ Mass flow ▪ **Corrected volume flow** option ▪ Temperature ▪ Volume flow
	Measured variable status [from the factory] 1)			
	Quality	Good		
	Quality substatus	Ok		
	Coding (hex)	0x80 to 0x83		
	Status signal	S		
	Diagnostic behavior	Warning		

1) Diagnostic behavior can be changed. This causes the overall status of the measured variable to change.

Diagnostic information			Remedy instructions	Influenced measured variables
No.	Short text			
378	Supply voltage ISEM faulty		1. If available: Check connection cable between sensor and transmitter 2. Replace main electronic module 3. Replace sensor electronic module (ISEM)	▪ Conductivity ▪ Corrected conductivity ▪ Measured values ▪ Density ▪ Electronics temperature ▪ Flow velocity ▪ Mass flow ▪ **Corrected volume flow** option ▪ Temperature ▪ Volume flow
	Measured variable status			
	Quality	Good		
	Quality substatus	Ok		
	Coding (hex)	0x80 to 0x83		
	Status signal	F		
	Diagnostic behavior	Alarm		

Diagnostic information			Remedy instructions	Influenced measured variables
No.	Short text			
382	Data storage		1. Insert T-DAT 2. Replace T-DAT	▪ Conductivity ▪ Corrected conductivity ▪ Measured values ▪ Density ▪ Electronics temperature ▪ Flow velocity ▪ Mass flow ▪ **Corrected volume flow** option ▪ Temperature ▪ Volume flow
	Measured variable status			
	Quality	Good		
	Quality substatus	Ok		
	Coding (hex)	0x80 to 0x83		
	Status signal	F		
	Diagnostic behavior	Alarm		

Diagnostic information			Remedy instructions	Influenced measured variables
No.	Short text			
383	Memory content		Reset device	▪ Conductivity ▪ Corrected conductivity ▪ Measured values ▪ Density ▪ Electronics temperature ▪ Flow velocity ▪ Mass flow ▪ **Corrected volume flow** option ▪ Temperature ▪ Volume flow
	Measured variable status			
	Quality	Good		
	Quality substatus	Ok		
	Coding (hex)	0x80 to 0x83		
	Status signal	F		
	Diagnostic behavior	Alarm		

Diagnostic information			Remedy instructions	Influenced measured variables
No.	Short text			
387	HistoROM data faulty		Contact service organization	▪ Conductivity ▪ Corrected conductivity ▪ Measured values ▪ Density ▪ Electronics temperature ▪ Flow velocity ▪ Mass flow ▪ **Corrected volume flow** option ▪ Temperature ▪ Volume flow
	Measured variable status			
	Quality	Good		
	Quality substatus	Ok		
	Coding (hex)	0x80 to 0x83		
	Status signal	F		
	Diagnostic behavior	Alarm		

12.7.3 Diagnostic of configuration

Diagnostic information			Remedy instructions	Influenced measured variables
No.	Short text			
410	Data transfer failed		1. Retry data transfer 2. Check connection	▪ Conductivity ▪ Corrected conductivity ▪ Measured values ▪ Density ▪ Electronics temperature ▪ Flow velocity ▪ Mass flow ▪ **Corrected volume flow** option ▪ Temperature ▪ Volume flow
	Measured variable status			
	Quality	Good		
	Quality substatus	Ok		
	Coding (hex)	0x80 to 0x83		
	Status signal	F		
	Diagnostic behavior	Alarm		

Diagnostic information			Remedy instructions	Influenced measured variables
No.	Short text			
412	Processing download		Download active, please wait	▪ Conductivity ▪ Corrected conductivity ▪ Measured values ▪ Density ▪ Electronics temperature ▪ Flow velocity ▪ Mass flow ▪ **Corrected volume flow** option ▪ Temperature ▪ Volume flow
	Measured variable status			
	Quality	Good		
	Quality substatus	Ok		
	Coding (hex)	0x80 to 0x83		
	Status signal	C		
	Diagnostic behavior	Warning		

Diagnostic information			Remedy instructions	Influenced measured variables
No.	Short text			
431	Trim 1 to n required		Carry out trim	–
	Measured variable status			
	Quality	Good		
	Quality substatus	Ok		
	Coding (hex)	0x80 to 0x83		
	Status signal	C		
	Diagnostic behavior	Warning		

Diagnostic information			Remedy instructions	Influenced measured variables
No.	Short text			
437	Configuration incompatible		1. Update firmware 2. Execute factory reset	▪ Conductivity ▪ Corrected conductivity ▪ Measured values ▪ Density ▪ Electronics temperature ▪ Flow velocity ▪ Mass flow ▪ **Corrected volume flow** option ▪ Temperature ▪ Volume flow
	Measured variable status			
	Quality	Good		
	Quality substatus	Ok		
	Coding (hex)	0x80 to 0x83		
	Status signal	F		
	Diagnostic behavior	Alarm		

Diagnostic information			Remedy instructions	Influenced measured variables
No.	Short text			
438	Dataset different		1. Check dataset file 2. Check device parameterization 3. Download new device parameterization	▪ Conductivity ▪ Corrected conductivity ▪ Measured values ▪ Density ▪ Electronics temperature ▪ Flow velocity ▪ Mass flow ▪ **Corrected volume flow** option ▪ Temperature ▪ Volume flow
	Measured variable status			
	Quality	Good		
	Quality substatus	Ok		
	Coding (hex)	0x80 to 0x83		
	Status signal	M		
	Diagnostic behavior	Warning		

Diagnostic information			Remedy instructions	Influenced measured variables
No.	Short text			
441	Current output 1 to n saturated		1. Check current output settings 2. Check process	–
	Measured variable status			
	Quality	Good		
	Quality substatus	Ok		
	Coding (hex)	0x80 to 0x83		
	Status signal	S		
	Diagnostic behavior	Warning		

Diagnostic information			Remedy instructions	Influenced measured variables
No.	Short text			
442	Frequency output 1 saturated		1. Check frequency output settings 2. Check process	–
	Measured variable status			
	Quality	Good		
	Quality substatus	Ok		
	Coding (hex)	0x80 to 0x83		
	Status signal	S		
	Diagnostic behavior	Warning		

Diagnostic information			Remedy instructions	Influenced measured variables
No.	Short text			
443	Pulse output 1 saturated		1. Check pulse output settings 2. Check process	–
	Measured variable status [from the factory] [1]			
	Quality	Good		
	Quality substatus	Ok		
	Coding (hex)	0x80 to 0x83		
	Status signal	S		
	Diagnostic behavior	Warning		

1) Diagnostic behavior can be changed. This causes the overall status of the measured variable to change.

Diagnostic information			Remedy instructions	Influenced measured variables
No.	Short text			
444	Current input 1 to n saturated		1. Check current input settings 2. Check connected device 3. Check process	Measured values
	Measured variable status [from the factory] [1]			
	Quality	Good		
	Quality substatus	Ok		
	Coding (hex)	0x80 to 0x83		
	Status signal	S		
	Diagnostic behavior	Warning		

1) Diagnostic behavior can be changed. This causes the overall status of the measured variable to change.

Diagnostic information			Remedy instructions	Influenced measured variables
No.	Short text			
453	Flow override active		Deactivate flow override	▪ Conductivity ▪ Corrected conductivity ▪ Density ▪ Electronics temperature ▪ Flow velocity ▪ Mass flow ▪ **Corrected volume flow** option ▪ Temperature ▪ Volume flow
	Measured variable status			
	Quality	Good		
	Quality substatus	Ok		
	Coding (hex)	0x80 to 0x83		
	Status signal	C		
	Diagnostic behavior	Warning		

Diagnostic information			Remedy instructions	Influenced measured variables
No.	Short text			
484	Failure mode simulation active		Deactivate simulation	▪ Conductivity ▪ Corrected conductivity ▪ Density ▪ Electronics temperature ▪ Flow velocity ▪ Mass flow ▪ **Corrected volume flow** option ▪ Temperature ▪ Volume flow
	Measured variable status			
	Quality	Good		
	Quality substatus	Ok		
	Coding (hex)	0x80 to 0x83		
	Status signal	C		
	Diagnostic behavior	Alarm		

Diagnostic information			Remedy instructions	Influenced measured variables
No.	Short text			
485	Process variable simulation active		Deactivate simulation	▪ Conductivity ▪ Corrected conductivity ▪ Density ▪ Electronics temperature ▪ Flow velocity ▪ Mass flow ▪ **Corrected volume flow** option ▪ Temperature ▪ Volume flow
	Measured variable status			
	Quality	Good		
	Quality substatus	Ok		
	Coding (hex)	0x80 to 0x83		
	Status signal	C		
	Diagnostic behavior	Warning		

Diagnostic information			Remedy instructions	Influenced measured variables
No.	Short text			
486	Current input 1 to n simulation active		Deactivate simulation	Measured values
	Measured variable status			
	Quality	Good		
	Quality substatus	Ok		
	Coding (hex)	0x80 to 0x83		
	Status signal	C		
	Diagnostic behavior	Warning		

Diagnostic information			Remedy instructions	Influenced measured variables
No.	Short text			
491	Current output 1 to n simulation active		Deactivate simulation	–
	Measured variable status			
	Quality	Good		
	Quality substatus	Ok		
	Coding (hex)	0x80 to 0x83		
	Status signal	C		
	Diagnostic behavior	Warning		

Diagnostic information			Remedy instructions	Influenced measured variables
No.	Short text			
492	Frequency output 1 to n simulation active		Deactivate simulation frequency output	–
	Measured variable status			
	Quality	Good		
	Quality substatus	Ok		
	Coding (hex)	0x80 to 0x83		
	Status signal	C		
	Diagnostic behavior	Warning		

Diagnostic information			Remedy instructions	Influenced measured variables
No.	Short text			
493	Pulse output simulation active		Deactivate simulation pulse output	–
	Measured variable status			
	Quality	Good		
	Quality substatus	Ok		
	Coding (hex)	0x80 to 0x83		
	Status signal	C		
	Diagnostic behavior	Warning		

Diagnostic information			Remedy instructions	Influenced measured variables
No.	Short text			
494	Switch output 1 to n simulation active		Deactivate simulation switch output	–
	Measured variable status			
	Quality	Good		
	Quality substatus	Ok		
	Coding (hex)	0x80 to 0x83		
	Status signal	C		
	Diagnostic behavior	Warning		

Diagnostic information			Remedy instructions	Influenced measured variables
No.	Short text			
495	Diagnostic event simulation active		Deactivate simulation	–
	Measured variable status			
	Quality	Good		
	Quality substatus	Ok		
	Coding (hex)	0x80 to 0x83		
	Status signal	C		
	Diagnostic behavior	Warning		

Diagnostic information			Remedy instructions	Influenced measured variables
No.	Short text			
496	Status input 1 to n simulation active		Deactivate simulation status input	–
	Measured variable status			
	Quality	Good		
	Quality substatus	Ok		
	Coding (hex)	0x80 to 0x83		
	Status signal	C		
	Diagnostic behavior	Warning		

Diagnostic information			Remedy instructions	Influenced measured variables
No.	Short text			
511	Sensor setting error		1. Check measuring period and integration time 2. Check sensor properties	▪ Conductivity ▪ Corrected conductivity ▪ Measured values ▪ Density ▪ Electronics temperature ▪ Flow velocity ▪ Mass flow ▪ **Corrected volume flow** option ▪ Temperature ▪ Volume flow
	Measured variable status			
	Quality	Good		
	Quality substatus	Ok		
	Coding (hex)	0x80 to 0x83		
	Status signal	C		
	Diagnostic behavior	Alarm		

Diagnostic information			Remedy instructions	Influenced measured variables
No.	Short text			
512	ECC recovery time exceeded		1. Check ECC recovery time 2. Turn off ECC	▪ Conductivity ▪ Corrected conductivity ▪ Measured values ▪ Density ▪ Electronics temperature ▪ Flow velocity ▪ Mass flow ▪ **Corrected volume flow** option ▪ Temperature ▪ Volume flow
	Measured variable status			
	Quality	Good		
	Quality substatus	Ok		
	Coding (hex)	0x80 to 0x83		
	Status signal	F		
	Diagnostic behavior	Alarm		

Diagnostic information			Remedy instructions	Influenced measured variables
No.	Short text			
520	I/O 1 to n hardware configuration invalid		1. Check I/O hardware configuration 2. Replace wrong I/O module 3. Plug the module of double pulse output on correct slot	–
	Measured variable status			
	Quality	Good		
	Quality substatus	Ok		
	Coding (hex)	0x80 to 0x83		
	Status signal	F		
	Diagnostic behavior	Alarm		

Diagnostic information			Remedy instructions	Influenced measured variables
No.	Short text			
530	Electrode cleaning active		Switch off electrode cleaning	▪ Conductivity ▪ Corrected conductivity ▪ Measured values ▪ Density ▪ Electronics temperature ▪ Flow velocity ▪ Mass flow ▪ **Corrected volume flow** option ▪ Temperature ▪ Volume flow
	Measured variable status			
	Quality	Good		
	Quality substatus	Ok		
	Coding (hex)	0x80 to 0x83		
	Status signal	C		
	Diagnostic behavior	Warning		

Diagnostic information			Remedy instructions	Influenced measured variables
No.	Short text			
531	Empty pipe adjustment faulty		Execute EPD adjustment	▪ Conductivity ▪ Corrected conductivity ▪ Measured values ▪ Density ▪ Electronics temperature ▪ Flow velocity ▪ Mass flow ▪ **Corrected volume flow** option ▪ Temperature ▪ Volume flow
	Measured variable status [from the factory] [1)]			
	Quality	Good		
	Quality substatus	Ok		
	Coding (hex)	0x80 to 0x83		
	Status signal	S		
	Diagnostic behavior	Warning		

1) Diagnostic behavior can be changed. This causes the overall status of the measured variable to change.

Diagnostic information			Remedy instructions	Influenced measured variables
No.	Short text			
537	Configuration		1. Check IP addresses in network 2. Change IP address	–
	Measured variable status			
	Quality	Good		
	Quality substatus	Ok		
	Coding (hex)	0x80 to 0x83		
	Status signal	F		
	Diagnostic behavior	Warning		

Diagnostic information			Remedy instructions	Influenced measured variables
No.	Short text			
594	Relay output 1 to n simulation active		Deactivate simulation switch output	–
	Measured variable status			
	Quality	Good		
	Quality substatus	Ok		
	Coding (hex)	0x80 to 0x83		
	Status signal	C		
	Diagnostic behavior	Warning		

12.7.4 Diagnostic of process

Diagnostic information			Remedy instructions	Influenced measured variables
No.	Short text			
803	Loop current 1 faulty		1. Check wiring 2. Change I/O module	–
	Measured variable status			
	Quality	Good		
	Quality substatus	Ok		
	Coding (hex)	0x80 to 0x83		
	Status signal	F		
	Diagnostic behavior	Alarm		

Diagnostic information			Remedy instructions	Influenced measured variables
No.	Short text			
832	Electronics temperature too high		Reduce ambient temperature	▪ Conductivity ▪ Corrected conductivity ▪ Measured values ▪ Density ▪ Electronics temperature ▪ Flow velocity ▪ Mass flow ▪ **Corrected volume flow** option ▪ Temperature ▪ Volume flow
	Measured variable status [from the factory] [1]			
	Quality	Good		
	Quality substatus	Ok		
	Coding (hex)	0x80 to 0x83		
	Status signal	S		
	Diagnostic behavior	Warning		

1) Diagnostic behavior can be changed. This causes the overall status of the measured variable to change.

Diagnostic information			Remedy instructions	Influenced measured variables
No.	Short text			
833	Electronics temperature too low		Increase ambient temperature	▪ Conductivity ▪ Corrected conductivity ▪ Measured values ▪ Density ▪ Electronics temperature ▪ Flow velocity ▪ Mass flow ▪ **Corrected volume flow** option ▪ Temperature ▪ Volume flow
	Measured variable status [from the factory] [1]			
	Quality	Good		
	Quality substatus	Ok		
	Coding (hex)	0x80 to 0x83		
	Status signal	S		
	Diagnostic behavior	Warning		

1) Diagnostic behavior can be changed. This causes the overall status of the measured variable to change.

Diagnostic information			Remedy instructions	Influenced measured variables
No.	Short text			
834	Process temperature too high		Reduce process temperature	▪ Conductivity ▪ Corrected conductivity ▪ Density ▪ Electronics temperature ▪ Flow velocity ▪ Mass flow ▪ **Corrected volume flow** option ▪ Temperature ▪ Volume flow
	Measured variable status [from the factory] [1]			
	Quality	Good		
	Quality substatus	Ok		
	Coding (hex)	0x80 to 0x83		
	Status signal	S		
	Diagnostic behavior	Warning		

1) Diagnostic behavior can be changed. This causes the overall status of the measured variable to change.

Diagnostic information			Remedy instructions	Influenced measured variables
No.	Short text			
835	Process temperature too low		Increase process temperature	▪ Conductivity ▪ Corrected conductivity ▪ Density ▪ Electronics temperature ▪ Flow velocity ▪ Mass flow ▪ **Corrected volume flow** option ▪ Temperature ▪ Volume flow
	Measured variable status [from the factory] [1]			
	Quality	Good		
	Quality substatus	Ok		
	Coding (hex)	0x80 to 0x83		
	Status signal	S		
	Diagnostic behavior	Warning		

1) Diagnostic behavior can be changed. This causes the overall status of the measured variable to change.

Diagnostic information			Remedy instructions	Influenced measured variables
No.	Short text			
842	Process value below limit		1. Decrease process value 2. Check application 3. Check sensor	▪ Conductivity ▪ Corrected conductivity ▪ Density ▪ Electronics temperature ▪ Flow velocity ▪ Mass flow ▪ **Corrected volume flow** option ▪ Temperature ▪ Volume flow
	Measured variable status [from the factory] [1]			
	Quality	Good		
	Quality substatus	Ok		
	Coding (hex)	0x80 to 0x83		
	Status signal	S		
	Diagnostic behavior	Warning		

1) Diagnostic behavior can be changed. This causes the overall status of the measured variable to change.

Diagnostic information			Remedy instructions	Influenced measured variables
No.	Short text			
882	Input signal faulty		1. Check input signal parameterization 2. Check external device 3. Check process conditions	▪ Conductivity ▪ Corrected conductivity ▪ Measured values ▪ Density ▪ Electronics temperature ▪ Flow velocity ▪ Mass flow ▪ **Corrected volume flow** option ▪ Temperature ▪ Volume flow
	Measured variable status			
	Quality	Bad		
	Quality substatus	Maintenance alarm		
	Coding (hex)	0x24 to 0x27		
	Status signal	F		
	Diagnostic behavior	Alarm		

Diagnostic information			Remedy instructions	Influenced measured variables
No.	**Short text**			
937	Sensor symmetry		1. Eliminate external magnetic field near sensor 2. Turn off diagnostic message	▪ Conductivity ▪ Corrected conductivity ▪ Measured values ▪ Density ▪ Electronics temperature ▪ Flow velocity ▪ Mass flow ▪ **Corrected volume flow** option ▪ Temperature ▪ Volume flow
	Measured variable status [from the factory] [1]			
	Quality	Good		
	Quality substatus	Ok		
	Coding (hex)	0x80 to 0x83		
	Status signal	S		
	Diagnostic behavior	Warning		

1) Diagnostic behavior can be changed. This causes the overall status of the measured variable to change.

Diagnostic information			Remedy instructions	Influenced measured variables
No.	**Short text**			
938	Coil current not stable		1. Check if external magnetic interference is present 2. Perform Heartbeat Verification 3. Check flow value	▪ Conductivity ▪ Corrected conductivity ▪ Measured values ▪ Density ▪ Electronics temperature ▪ Flow velocity ▪ Mass flow ▪ **Corrected volume flow** option ▪ Temperature ▪ Volume flow
	Measured variable status [from the factory] [1]			
	Quality	Good		
	Quality substatus	Ok		
	Coding (hex)	0x80 to 0x83		
	Status signal	F		
	Diagnostic behavior	Alarm		

1) Diagnostic behavior can be changed. This causes the overall status of the measured variable to change.

Diagnostic information			Remedy instructions	Influenced measured variables
No.	**Short text**			
961	Electrode potential out of specification		1. Check process conditions 2. Check ambient conditions	▪ Mass flow ▪ Status ▪ Volume flow
	Measured variable status [from the factory] [1]			
	Quality	Good		
	Quality substatus	Ok		
	Coding (hex)	0x80 to 0x83		
	Status signal	S		
	Diagnostic behavior	Warning		

1) Diagnostic behavior can be changed. This causes the overall status of the measured variable to change.

Diagnostic information			Remedy instructions	Influenced measured variables
No.	Short text			
962	Pipe empty		1. Perform full pipe adjustment 2. Perform empty pipe adjustment 3. Turn off empty pipe detection	▪ Conductivity ▪ Corrected conductivity ▪ Measured values ▪ Density ▪ Electronics temperature ▪ Flow velocity ▪ Mass flow ▪ **Corrected volume flow** option ▪ Temperature ▪ Volume flow
	Measured variable status [from the factory] [1]			
	Quality	Good		
	Quality substatus	Ok		
	Coding (hex)	0x80 to 0x83		
	Status signal	S		
	Diagnostic behavior	Warning		

1) Diagnostic behavior can be changed. This causes the overall status of the measured variable to change.

12.8 Pending diagnostic events

The **Diagnostics** menu allows the user to view the current diagnostic event and the previous diagnostic event separately.

To call up the measures to rectify a diagnostic event:
- Via local display → 143
- Via web browser → 144
- Via "FieldCare" operating tool → 145
- Via "DeviceCare" operating tool → 145

Other pending diagnostic events can be displayed in the **Diagnostic list** submenu → 167

Navigation
"Diagnostics" menu

Diagnostics	
Actual diagnostics	→ 167
Previous diagnostics	→ 167
Operating time from restart	→ 167
Operating time	→ 167

Parameter overview with brief description

Parameter	Prerequisite	Description	User interface
Actual diagnostics	A diagnostic event has occurred.	Shows the current occured diagnostic event along with its diagnostic information. If two or more messages occur simultaneously, the message with the highest priority is shown on the display.	Symbol for diagnostic behavior, diagnostic code and short message.
Previous diagnostics	Two diagnostic events have already occurred.	Shows the diagnostic event that occurred prior to the current diagnostic event along with its diagnostic information.	Symbol for diagnostic behavior, diagnostic code and short message.
Operating time from restart	–	Shows the time the device has been in operation since the last device restart.	Days (d), hours (h), minutes (m) and seconds (s)
Operating time	–	Indicates how long the device has been in operation.	Days (d), hours (h), minutes (m) and seconds (s)

12.9 Diagnostic list

Up to 5 currently pending diagnostic events can be displayed in the **Diagnostic list** submenu along with the associated diagnostic information. If more than 5 diagnostic events are pending, the events with the highest priority are shown on the display.

Navigation path
Diagnostics → Diagnostic list

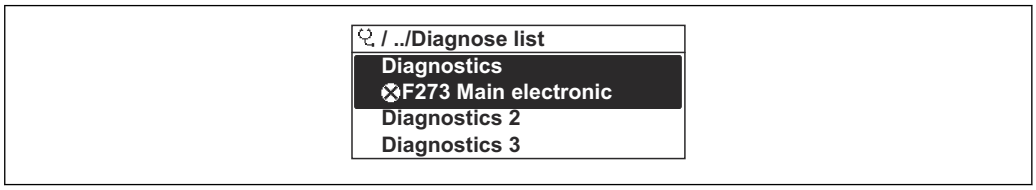

27 *Taking the example of the local display*

To call up the measures to rectify a diagnostic event:
- Via local display → 143
- Via web browser → 144
- Via "FieldCare" operating tool → 145
- Via "DeviceCare" operating tool → 145

12.10 Event logbook

12.10.1 Reading out the event logbook

A chronological overview of the event messages that have occurred is provided in the **Events list** submenu.

Navigation path
Diagnostics menu → **Event logbook** submenu → Event list

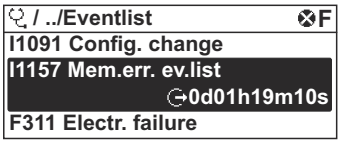

A0014008-EN

28 *Taking the example of the local display*

- A maximum of 20 event messages can be displayed in chronological order.
- If the **Extended HistoROM** application package (order option) is enabled in the device, the event list can contain up to 100 entries .

The event history includes entries for:
- Diagnostic events → 147
- Information events → 168

In addition to the operation time of its occurrence, each event is also assigned a symbol that indicates whether the event has occurred or is ended:
- Diagnostic event
  - ⊖: Occurrence of the event
  - ⊖: End of the event
- Information event
  ⊖: Occurrence of the event

To call up the measures to rectify a diagnostic event:
- Via local display → 143
- Via web browser → 144
- Via "FieldCare" operating tool → 145
- Via "DeviceCare" operating tool → 145

For filtering the displayed event messages → 168

12.10.2 Filtering the event logbook

Using the **Filter options** parameter you can define which category of event message is displayed in the **Events list** submenu.

Navigation path
Diagnostics → Event logbook → Filter options

Filter categories
- All
- Failure (F)
- Function check (C)
- Out of specification (S)
- Maintenance required (M)
- Information (I)

12.10.3 Overview of information events

Unlike a diagnostic event, an information event is displayed in the event logbook only and not in the diagnostic list.

Info number	Info name
I1000	--------(Device ok)
I1079	Sensor changed
I1089	Power on
I1090	Configuration reset
I1091	Configuration changed

Info number	Info name
I1092	HistoROM backup deleted
I1137	Electronics changed
I1151	History reset
I1155	Reset electronics temperature
I1156	Memory error trend
I1157	Memory error event list
I1256	Display: access status changed
I1278	I/O module restarted
I1335	Firmware changed
I1351	Empty pipe detection adjustment failure
I1353	Empty pipe detection adjustment ok
I1361	Web server: login failed
I1397	Fieldbus: access status changed
I1398	CDI: access status changed
I1443	Build-up thickness not determined
I1444	Device verification passed
I1445	Device verification failed
I1457	Measurement error verification failed
I1459	I/O module verification failed
I1461	Sensor verification failed
I1462	Sensor electronic module verific. failed
I1512	Download started
I1513	Download finished
I1514	Upload started
I1515	Upload finished
I1618	I/O module 2 replaced
I1619	I/O module 3 replaced
I1621	I/O module 4 replaced
I1622	Calibration changed
I1624	All totalizers reset
I1625	Write protection activated
I1626	Write protection deactivated
I1627	Web server: login successful
I1628	Display: login successful
I1629	CDI: login successful
I1631	Web server access changed
I1632	Display: login failed
I1633	CDI: login failed
I1634	Reset to factory settings
I1635	Reset to delivery settings
I1639	Max. switch cycles number reached
I1649	Hardware write protection activated
I1650	Hardware write protection deactivated

Info number	Info name
I1712	New flash file received
I1725	Sensor electronic module (ISEM) changed
I1726	Configuration backup failed

12.11 Resetting the measuring device

The entire device configuration or some of the configuration can be reset to a defined state with the **Device reset** parameter (→ 📄 122).

12.11.1 Function scope of "Device reset" parameter

Options	Description
Cancel	No action is executed and the user exits the parameter.
To delivery settings	Every parameter for which a customer-specific default setting was ordered is reset to the customer-specific value. All other parameters are reset to the factory setting.
Restart device	The restart resets every parameter with data stored in volatile memory (RAM) to the factory setting (e.g. measured value data). The device configuration remains unchanged.

12.12 Device information

The **Device information** submenu contains all parameters that display different information for device identification.

Navigation
"Diagnostics" menu → Device information

▶ Device information	
Device tag	→ 📄 171
Serial number	→ 📄 171
Firmware version	→ 📄 171
Device name	→ 📄 171
Manufacturer	→ 📄 171
Order code	→ 📄 171
Extended order code 1	→ 📄 171
Extended order code 2	→ 📄 171
Extended order code 3	→ 📄 171
ENP version	→ 📄 171

Parameter overview with brief description

Parameter	Description	User interface	Factory setting
Device tag	Shows name of measuring point.	Character string comprising numbers, letters and special characters	Promag
Serial number	Shows the serial number of the measuring device.	Max. 11-digit character string comprising letters and numbers.	–
Firmware version	Shows the device firmware version installed.	Character string in the format xx.yy.zz	–
Device name	Shows the name of the transmitter. The name can be found on the nameplate of the transmitter.	Promag 300/500	–
Device name		Character string comprising numbers, letters and special characters	Prowirl
Manufacturer	Displays the manufacturer.	Character string comprising numbers, letters and special characters	Endress+Hauser
Order code	Shows the device order code. The order code can be found on the nameplate of the sensor and transmitter in the "Order code" field.	Character string composed of letters, numbers and certain punctuation marks (e.g. /).	–
Extended order code 1	Shows the 1st part of the extended order code. The extended order code can also be found on the nameplate of the sensor and transmitter in the "Ext. ord. cd." field.	Character string	–
Extended order code 2	Shows the 2nd part of the extended order code. The extended order code can also be found on the nameplate of the sensor and transmitter in the "Ext. ord. cd." field.	Character string	–
Extended order code 3	Shows the 3rd part of the extended order code. The extended order code can also be found on the nameplate of the sensor and transmitter in the "Ext. ord. cd." field.	Character string	–
ENP version	Shows the version of the electronic nameplate (ENP).	Character string	2.02.00

12.13 Firmware history

Release date	Firmware version	Order code for "Firmware version"	Firmware changes	Documentation type	Documentation
2023	01.00.zz	Option **61**	Original firmware	Operating Instructions	BA02106D/06/EN/01.21

It is possible to flash the firmware to the current version using the service interface.

For the compatibility of the firmware version with the installed device description files and operating tools, observe the information about the device in the "Manufacturer's information" document.

The manufacturer's information is available:
- In the Download Area of the Endress+Hauser web site: www.endress.com → Downloads
- Specify the following details:
  - Product root: e.g. 5H3B
    The product root is the first part of the order code: see the nameplate on the device.
  - Text search: Manufacturer's information
  - Media type: Documentation – Technical Documentation

13 Maintenance

13.1 Maintenance tasks

No special maintenance work is required.

13.1.1 Exterior cleaning

When cleaning the exterior of measuring devices, always use cleaning agents that do not attack the surface of the housing or the seals.

13.1.2 Interior cleaning

Cleaning with pigs

It is essential to take the internal diameters of the measuring tube and process connection into account when cleaning with pigs. All the dimensions and lengths of the sensor and transmitter are provided in the separate "Technical Information" document.

13.1.3 Replacing seals

The sensor's seals (particularly aseptic molded seals) must be replaced periodically.

The interval between changes depends on the frequency of the cleaning cycles, the cleaning temperature and the medium temperature.

Replacement seals (accessory part) → 📄 206

13.2 Measuring and test equipment

Endress+Hauser offers a wide variety of measuring and test equipment, such as W@M or device tests.

Your Endress+Hauser Sales Center can provide detailed information on the services.

List of some of the measuring and testing equipment: → 📄 176→ 📄 178

13.3 Endress+Hauser services

Endress+Hauser offers a wide variety of services for maintenance such as recalibration, maintenance service or device tests.

Your Endress+Hauser Sales Center can provide detailed information on the services.

14 Repair

14.1 General information

14.1.1 Repair and conversion concept

The Endress+Hauser repair and conversion concept provides for the following:
- The measuring devices have a modular design.
- Spare parts are grouped into logical kits with the associated Installation Instructions.
- Repairs are carried out by Endress+Hauser Service or by appropriately trained customers.
- Certified devices can only be converted to other certified devices by Endress+Hauser Service or at the factory.

14.1.2 Notes for repair and conversion

For repair and modification of a measuring device, observe the following notes:
- ▶ Use only original Endress+Hauser spare parts.
- ▶ Carry out the repair according to the Installation Instructions.
- ▶ Observe the applicable standards, federal/national regulations, Ex documentation (XA) and certificates.
- ▶ Document every repair and each conversion and enter them into the *W@M* life cycle management database and Netilion Analytics.

14.2 Spare parts

Device Viewer (www.endress.com/deviceviewer):
All the spare parts for the measuring device, along with the order code, are listed here and can be ordered. If available, users can also download the associated Installation Instructions.

Measuring device serial number:
- Is located on the nameplate of the device.
- Can be read out via the **Serial number** parameter (→ 171) in the **Device information** submenu.

14.3 Endress+Hauser services

Endress+Hauser offers a wide range of services.

Your Endress+Hauser Sales Center can provide detailed information on the services.

14.4 Return

The requirements for safe device return can vary depending on the device type and national legislation.

1. Refer to the web page for information:
   http://www.endress.com/support/return-material
   ↳ Select the region.
2. Return the device if repairs or a factory calibration are required, or if the wrong device was ordered or delivered.

14.5 Disposal

If required by the Directive 2012/19/EU on waste electrical and electronic equipment (WEEE), the product is marked with the depicted symbol in order to minimize the disposal of WEEE as unsorted municipal waste. Do not dispose of products bearing this marking as unsorted municipal waste. Instead, return them to the manufacturer for disposal under the applicable conditions.

14.5.1 Removing the measuring device

1. Switch off the device.

⚠ WARNING

Danger to persons from process conditions!

- Beware of hazardous process conditions such as pressure in the measuring device, high temperatures or aggressive media.

2. Carry out the mounting and connection steps from the "Mounting the measuring device" and "Connecting the measuring device" sections in reverse order. Observe the safety instructions.

14.5.2 Disposing of the measuring device

⚠ WARNING

Danger to personnel and environment from fluids that are hazardous to health.

- Ensure that the measuring device and all cavities are free of fluid residues that are hazardous to health or the environment, e.g. substances that have permeated into crevices or diffused through plastic.

Observe the following notes during disposal:

- Observe valid federal/national regulations.
- Ensure proper separation and reuse of the device components.

15 Accessories

Various accessories, which can be ordered with the device or subsequently from Endress +Hauser, are available for the device. Detailed information on the order code in question is available from your local Endress+Hauser sales center or on the product page of the Endress+Hauser website: www.endress.com.

15.1 Device-specific accessories

15.1.1 For the transmitter

Accessories	Description
Proline 300 transmitter	Transmitter for replacement or storage. Use the order code to define the following specifications: ▪ Approvals ▪ Output ▪ Input ▪ Display/operation ▪ Housing ▪ Software Order code: 5X3BXX Installation Instructions EA01199D
Remote display and operating module DKX001	▪ If ordered directly with the measuring device: Order code for "Display; operation", option O "Remote display 4-line, illuminated; 10 m (30 ft) cable; touch control" ▪ If ordered separately: ▪ Measuring device: order code for "Display; operation", option M "W/o, prepared for remote display" ▪ DKX001: Via the separate product structure DKX001 ▪ If ordered subsequently: DKX001: Via the separate product structure DKX001 **Mounting bracket for DKX001** ▪ If ordered directly: order code for "Accessory enclosed", option RA "Mounting bracket, pipe 1/2"' ▪ If ordered subsequently: order number: 71340960 **Connecting cable (replacement cable)** Via the separate product structure: DKX002 Further information on display and operating module DKX001→ 📄 198. Special Documentation SD01763D
External WLAN antenna	External WLAN antenna with 1.5 m (59.1 in) connecting cable and two angle brackets. Order code for "Accessory enclosed", option P8 "Wireless antenna wide area". ▪ The external WLAN antenna is not suitable for use in hygienic applications. ▪ Additional information regarding the WLAN interface → 📄 67. Order number: 71351317 Installation Instructions EA01238D
Weather protection cover	Is used to protect the measuring device from the effects of the weather: e.g. rainwater, excess heating from direct sunlight. Order number: 71343505 Installation Instructions EA01160D

15.1.2 For the sensor

Accessories	Description
Adapter set	Adapter connections for installing a Promag H instead of a Promag 30/33 A or Promag 30/33 H (DN 25). Consists of: ▪ 2 process connections ▪ Screws ▪ Seals
Seal set	For the regular replacement of seals for the sensor.
Spacer	If replacing a DN 80/100 sensor in an existing installation, a spacer is needed if the new sensor is shorter.
Welding jig	Welding socket as process connection: welding jig for installation in pipe.
Grounding rings	Are used to ground the medium in lined measuring tubes to ensure proper measurement. Grounding rings can be ordered via the device order structure or configured and ordered as an accessory via the DK5HR order structure.
Mounting kit	Consists of: ▪ 2 process connections ▪ Screws ▪ Seals
Wall mounting kit	Wall mounting kit for measuring device (only DN 2 to 25 (1/12 to 1"))

15.2 Communication-specific accessories

Accessories	Description
Fieldgate FXA42	Is used to transmit the measured values of connected 4 to 20 mA analog measuring devices, as well as digital measuring devices ▪ Technical Information TI01297S ▪ Operating Instructions BA01778S ▪ Product page: www.endress.com/fxa42
Field Xpert SMT50	The Field Xpert SMT70 tablet PC for device configuration enables mobile plant asset management in non-hazardous areas. It is suitable for commissioning and maintenance staff to manage field instruments with a digital communication interface and to record progress. This tablet PC is designed as an all-in-one solution with a preinstalled driver library and is an easy-to-use, touch-sensitive tool which can be used to manage field instruments throughout their entire life cycle. ▪ Technical Information TI01342S ▪ Operating Instructions BA01709S ▪ Product page: www.endress.com/smt50
Field Xpert SMT70	The Field Xpert SMT70 tablet PC for device configuration enables mobile plant asset management in hazardous and non-hazardous areas. It is suitable for commissioning and maintenance staff to manage field instruments with a digital communication interface and to record progress. This tablet PC is designed as an all-in-one solution with a preinstalled driver library and is an easy-to-use, touch-sensitive tool which can be used to manage field instruments throughout their entire life cycle. ▪ Technical Information TI01342S ▪ Operating Instructions BA01709S ▪ Product page: www.endress.com/smt70
Field Xpert SMT77	The Field Xpert SMT77 tablet PC for device configuration enables mobile plant asset management in areas categorized as Ex Zone 1. ▪ Technical Information TI01418S ▪ Operating Instructions BA01923S ▪ Product page: www.endress.com/smt77

15.3 Service-specific accessories

Accessory	Description
Applicator	Software for selecting and sizing Endress+Hauser measuring devices: ▪ Choice of measuring devices with industrial requirements ▪ Calculation of all the necessary data for identifying the optimum flowmeter: e.g. nominal diameter, pressure loss, flow velocity and accuracy. ▪ Graphic illustration of the calculation results ▪ Determination of the partial order code, administration, documentation and access to all project-related data and parameters over the entire life cycle of a project. Applicator is available: ▪ Via the Internet: https://portal.endress.com/webapp/applicator ▪ As a downloadable DVD for local PC installation.
W@M	W@M Life Cycle Management Improved productivity with information at your fingertips. Data relevant to a plant and its components is generated from the first stages of planning and during the asset's complete life cycle. W@M Life Cycle Management is an open and flexible information platform with online and on-site tools. Instant access for your staff to current, in-depth data shortens your plant's engineering time, speeds up procurement processes and increases plant uptime. Combined with the right services, W@M Life Cycle Management boosts productivity in every phase. For more information, see: www.endress.com/lifecyclemanagement
FieldCare	FDT-based plant asset management tool from Endress+Hauser. It can configure all smart field units in your system and helps you manage them. By using the status information, it is also a simple but effective way of checking their status and condition. Operating Instructions BA00027S and BA00059S
DeviceCare	Tool for connecting and configuring Endress+Hauser field devices. Innovation brochure IN01047S

15.4 System components

Accessories	Description
Memograph M graphic data manager	The Memograph M graphic data manager provides information on all the relevant measured variables. Measured values are recorded correctly, limit values are monitored and measuring points analyzed. The data are stored in the 256 MB internal memory and also on a SD card or USB stick. ▪ Technical Information TI00133R ▪ Operating Instructions BA00247R
iTEMP	The temperature transmitters can be used in all applications and are suitable for the measurement of gases, steam and liquids. They can be used to read in the medium temperature. "Fields of Activity" document FA00006T

16 Technical data

16.1 Application

The measuring device is intended only for the flow measurement of liquids with a minimum conductivity of 5 µS/cm.

Depending on the version ordered, the measuring device can also measure potentially explosive, flammable, poisonous and oxidizing media.

To ensure that the device remains in proper operating condition for its service life, use the measuring device only for media against which the process-wetted materials are sufficiently resistant.

16.2 Function and system design

Measuring principle

Electromagnetic flow measurement on the basis of *Faraday's law of magnetic induction*.

Measuring system

The device consists of a transmitter and a sensor.

The device is available as a compact version:
The transmitter and sensor form a mechanical unit.

Information on the structure of the device → 📄 13

16.3 Input

Measured variable

Direct measured variables

- Volume flow (proportional to induced voltage)
- Temperature [1]
- Electrical conductivity

Calculated measured variables

- Mass flow
- Corrected volume flow
- Corrected electrical conductivity [1]

Measuring range

Typically v = 0.01 to 10 m/s (0.03 to 33 ft/s) with the specified accuracy

Flow characteristic values in SI units: DN 2 to 125 (1/12 to 5")

Nominal diameter		Recommended flow	Factory settings		
		min./max. full scale value (v ~ 0.3/10 m/s)	Full scale value current output (v ~ 2.5 m/s)	Pulse value (~ 2 pulse/s)	Low flow cut off (v ~ 0.04 m/s)
[mm]	[in]	[dm³/min]	[dm³/min]	[dm³]	[dm³/min]
2	1/12	0.06 to 1.8	0.5	0.005	0.01
4	5/32	0.25 to 7	2	0.025	0.05

1) Available only for nominal diameters DN 15 to 150 (½ to 6") and with the order code for "Sensor option", option CI "Medium temperature measurement".

Nominal diameter		Recommended flow	Factory settings		
		min./max. full scale value (v ~ 0.3/10 m/s)	Full scale value current output (v ~ 2.5 m/s)	Pulse value (~ 2 pulse/s)	Low flow cut off (v ~ 0.04 m/s)
[mm]	[in]	[dm³/min]	[dm³/min]	[dm³]	[dm³/min]
8	5/16	1 to 30	8	0.1	0.1
15	½	4 to 100	25	0.2	0.5
25 [1]	1	9 to 300	75	0.5	1
40	1 ½	25 to 700	200	1.5	3
50	2	35 to 1 100	300	2.5	5
65	–	60 to 2 000	500	5	8
80	3	90 to 3 000	750	5	12
100	4	145 to 4 700	1200	10	20
125	5	220 to 7 500	1850	15	30

1) The values apply for the product version: 5HxB26

Flow characteristic values in SI units: DN 150 (6")

Nominal diameter		Recommended flow	Factory settings		
		min./max. full scale value (v ~ 0.3/10 m/s)	Full scale value current output (v ~ 2.5 m/s)	Pulse value (~ 2 pulse/s)	Low flow cut off (v ~ 0.04 m/s)
[mm]	[in]	[m³/h]	[m³/h]	[m³]	[m³/h]
150	6	20 to 600	150	0.03	2.5

Flow characteristic values in US units: 1/12 - 6" (DN 2 - 150)

Nominal diameter		Recommended flow	Factory settings		
		min./max. full scale value (v ~ 0.3/10 m/s)	Full scale value current output (v ~ 2.5 m/s)	Pulse value (~ 2 pulse/s)	Low flow cut off (v ~ 0.04 m/s)
[in]	[mm]	[gal/min]	[gal/min]	[gal]	[gal/ min]
1/12	2	0.015 to 0.5	0.1	0.001	0.002
1/32	4	0.07 to 2	0.5	0.005	0.008
5/16	8	0.25 to 8	2	0.02	0.025
½	15	1 to 27	6	0.05	0.1
1 [1]	25	2.5 to 80	18	0.2	0.25
1 ½	40	7 to 190	50	0.5	0.75
2	50	10 to 300	75	0.5	1.25
3	80	24 to 800	200	2	2.5
4	100	40 to 1 250	300	2	4

Nominal diameter		Recommended flow	Factory settings		
		min./max. full scale value (v ~ 0.3/10 m/s)	Full scale value current output (v ~ 2.5 m/s)	Pulse value (~ 2 pulse/s)	Low flow cut off (v ~ 0.04 m/s)
[in]	[mm]	[gal/min]	[gal/min]	[gal]	[gal/min]
5	125	60 to 1 950	450	5	7
6	150	90 to 2 650	600	5	12

1) The values apply for the product version: 5HxB26

Recommended measuring range

Flow limit → 📄 194

For custody transfer, the applicable approval determines the permitted measuring range, the pulse value and the low flow cut off.

Operable flow range

Over 1000 : 1

For custody transfer, the operable flow range is 100 : 1 to 630 : 1, depending on the nominal diameter. Further details are specified by the applicable approval.

Input signal

External measured values

To increase the accuracy of certain measured variables or to calculate the mass flow, the automation system can continuously write different measured values to the measuring device:
- Medium temperature enables temperature-compensated conductivity measurement (e.g. iTEMP)
- Reference density for calculating the mass flow

Various pressure and temperature measuring devices can be ordered from Endress +Hauser: see "Accessories" section → 📄 178

It is recommended to read in external measured values to calculate the corrected volume flow.

Current input

The measured values are written from the automation system to the measuring device via the current input → 📄 181.

Digital communication

The measured values are written by the automation system via PROFINET with Ethernet-APL.

Current input 0/4 to 20 mA

Current input	0/4 to 20 mA (active/passive)
Current span	▪ 4 to 20 mA (active) ▪ 0/4 to 20 mA (passive)
Resolution	1 µA
Voltage drop	Typically: 0.6 to 2 V for 3.6 to 22 mA (passive)
Maximum input voltage	≤ 30 V (passive)

Open-circuit voltage	≤ 28.8 V (active)
Possible input variables	▪ Temperature ▪ Density

Status input

Maximum input values	▪ DC −3 to 30 V ▪ If status input is active (ON): R_i >3 kΩ
Response time	Configurable: 5 to 200 ms
Input signal level	▪ Low signal: DC −3 to +5 V ▪ High signal: DC 12 to 30 V
Assignable functions	▪ Off ▪ Reset the individual totalizers separately ▪ Reset all totalizers ▪ Flow override

16.4 Output

Output signal

PROFINET with Ethernet-APL

Device use	**Device connection to an APL field switch** The device may only be operated according to the following APL port classifications: ▪ If used in hazardous areas: SLAA or SLAC [1)] ▪ If used in non-hazardous areas: SLAX Connection values of APL field switch (for example corresponds to APL port classification SPCC or SPAA, for instance): ▪ Maximum input voltage: 15 V_{DC} ▪ Minimum output values: 0.54 W **Device connection to an SPE switch** ▪ In non-hazardous areas, the device can be used with a suitable SPE switch: The device can be connected to an SPE switch with a maximum voltage of 30 V_{DC} and a minimum output power of 1.85 W. ▪ The SPE switch must support the 10BASE-T1L standard and the PoDL power classes 10, 11 or 12 and have a function to disable power class recognition.
PROFINET	According to IEC 61158 and IEC 61784
Ethernet-APL	According to IEEE 802.3cg, APL port profile specification v1.0, galvanically isolated
Data transfer	10 Mbit/s
Current consumption	**Transmitter** ▪ Max. 400 mA(24 V) ▪ Max. 200 mA (110 V, 50/60 Hz; 230 V, 50/60 Hz)
Permitted supply voltage	9 to 30 V
Network connection	With integrated reverse polarity protection

1) For more information on using the device in the hazardous area, see the Ex-specific Safety Instructions

Current output 4 to 20 mA

Signal mode	Can be set to: ▪ Active ▪ Passive
Current span	Can be set to: ▪ 4 to 20 mA NAMUR ▪ 4 to 20 mA US ▪ 4 to 20 mA ▪ 0 to 20 mA (only if the signal mode is active) ▪ Fixed current
Maximum output values	22.5 mA
Open-circuit voltage	DC 28.8 V (active)
Maximum input voltage	DC 30 V (passive)
Load	0 to 700 Ω
Resolution	0.38 µA
Damping	Configurable: 0 to 999.9 s
Assignable measured variables	▪ Volume flow ▪ Mass flow ▪ Corrected volume flow ▪ Flow velocity ▪ Conductivity ▪ Corrected conductivity ▪ Temperature ▪ Electronics temperature

Pulse/frequency/switch output

Function	Can be configured as pulse, frequency or switch output
Version	Open collector Can be set to: ▪ Active ▪ Passive ▪ Passive NAMUR Ex-i, passive
Maximum input values	DC 30 V, 250 mA (passive)
Open-circuit voltage	DC 28.8 V (active)
Voltage drop	For 22.5 mA: ≤ DC 2 V
Pulse output	
Maximum input values	DC 30 V, 250 mA (passive)
Maximum output current	22.5 mA (active)
Open-circuit voltage	DC 28.8 V (active)
Pulse width	Configurable: 0.05 to 2 000 ms
Maximum pulse rate	10 000 Impulse/s
Pulse value	Configurable
Assignable measured variables	▪ Volume flow ▪ Mass flow ▪ Corrected volume flow
Frequency output	
Maximum input values	DC 30 V, 250 mA (passive)
Maximum output current	22.5 mA (active)
Open-circuit voltage	DC 28.8 V (active)
Output frequency	Configurable: end value frequency 2 to 10 000 Hz(f_{max} = 12 500 Hz)
Damping	Configurable: 0 to 999.9 s
Pulse/pause ratio	1:1
Assignable measured variables	▪ Volume flow ▪ Mass flow ▪ Corrected volume flow ▪ Flow velocity ▪ Conductivity ▪ Corrected conductivity ▪ Temperature ▪ Electronics temperature
Switch output	
Maximum input values	DC 30 V, 250 mA (passive)
Open-circuit voltage	DC 28.8 V (active)
Switching behavior	Binary, conductive or non-conductive
Switching delay	Configurable: 0 to 100 s

Number of switching cycles	Unlimited

Assignable functions	▪ Off
	▪ On
	▪ Diagnostic behavior
	▪ Limit value:
	  ▪ Off
	  ▪ Volume flow
	  ▪ Mass flow
	  ▪ Corrected volume flow
	  ▪ Flow velocity
	  ▪ Conductivity
	  ▪ Corrected conductivity
	  ▪ Totalizer 1-3
	  ▪ Temperature
	  ▪ Electronics temperature
	▪ Flow direction monitoring
	▪ Status
	  ▪ Empty pipe detection
	  ▪ Buildup index
	  ▪ HBSI limit value exceeded
	  ▪ Low flow cut off

Relay output

Function	Switch output
Version	Relay output, galvanically isolated
Switching behavior	Can be set to: ▪ NO (normally open), factory setting ▪ NC (normally closed)
Maximum switching capacity (passive)	▪ DC 30 V, 0.1 A ▪ AC 30 V, 0.5 A

Assignable functions	▪ Off
	▪ On
	▪ Diagnostic behavior
	▪ Limit value:
	  ▪ Off
	  ▪ Volume flow
	  ▪ Mass flow
	  ▪ Corrected volume flow
	  ▪ Flow velocity
	  ▪ Conductivity
	  ▪ Corrected conductivity
	  ▪ Totalizer 1-3
	  ▪ Temperature
	  ▪ Electronics temperature
	▪ Flow direction monitoring
	▪ Status
	  ▪ Empty pipe detection
	  ▪ Buildup index
	  ▪ HBSI limit value exceeded
	  ▪ Low flow cut off

User-configurable input/output

One specific input or output is assigned to a user-configurable input/output (configurable I/O) during device commissioning.

The following inputs and outputs are available for assignment:
- Choice of current output: 4 to 20 mA (active), 0/4 to 20 mA (passive)
- Pulse/frequency/switch output
- Choice of current input: 4 to 20 mA (active), 0/4 to 20 mA (passive)
- Status input

Signal on alarm

Depending on the interface, failure information is displayed as follows:

PROFINET with Ethernet-APL

Device diagnostics	Diagnostics according to PROFINET PA Profile 4

Current output 0/4 to 20 mA

4 to 20 mA

Failure mode	Choose from: ▪ 4 to 20 mA in accordance with NAMUR recommendation NE 43 ▪ 4 to 20 mA in accordance with US ▪ Min. value: 3.59 mA ▪ Max. value: 22.5 mA ▪ Definable value between: 3.59 to 22.5 mA ▪ Actual value ▪ Last valid value

0 to 20 mA

Failure mode	Choose from: ▪ Maximum alarm: 22 mA ▪ Definable value between: 0 to 20.5 mA

Pulse/frequency/switch output

Pulse output	
Failure mode	Choose from: ▪ Actual value ▪ No pulses
Frequency output	
Failure mode	Choose from: ▪ Actual value ▪ 0 Hz ▪ Definable value between: 2 to 12 500 Hz
Switch output	
Failure mode	Choose from: ▪ Current status ▪ Open ▪ Closed

Relay output

Failure mode	Choose from: ▪ Current status ▪ Open ▪ Closed

Local display

Plain text display	With information on cause and remedial measures
Backlight	Red lighting indicates a device error.

Status signal as per NAMUR recommendation NE 107

Interface/protocol

- Via digital communication:
  PROFINET with Ethernet-APL
- Via service interface
  - CDI-RJ45 service interface
  - WLAN interface

Plain text display	With information on cause and remedial measures

Web browser

Plain text display	With information on cause and remedial measures

Light emitting diodes (LED)

Status information	Status indicated by various light emitting diodes The following information is displayed depending on the device version: ▪ Supply voltage active ▪ Data transmission active ▪ Device alarm/error has occurred ▪ PROFINET network available ▪ PROFINET connection established ▪ PROFINET blinking feature Diagnostic information via light emitting diodes → 139

Low flow cut off

The switch points for low flow cut off are user-selectable.

Galvanic isolation

The outputs are galvanically isolated:
- from the power supply
- from one another
- from the potential equalization (PE) terminal

protocol-specific data

Protocol	Application layer protocol for decentral device periphery and distributed automation, Version 2.43
Communication type	Ethernet Advanced Physical Layer 10BASE-T1L
Conformance Class	Conformance Class B (PA)
Netload Class	PROFINET Netload Robustness Class 2 10 Mbit/s
Baud rates	10 Mbit/s Full-duplex
Cycle times	64 ms
Polarity	Automatic correction of crossed "APL signal +" and "APL signal -" signal lines
Media Redundancy Protocol (MRP)	Not possible (point-to-point connection to APL field switch)

System redundancy support	System redundancy S2 (2 AR with 1 NAP)
Device profile	PROFINET PA profile 4 (Application interface identifier API: 0x9700)
Manufacturer ID	17
Device type ID	0xA43C
Device description files (GSD, DTM, FDI)	Information and files at: ▪ www.endress.com → Download Area ▪ www.profibus.com
Supported connections	▪ 2x AR (IO Controller AR) ▪ 2x AR (IO Supervisor Device AR connection allowed)
Configuration options for measuring device	▪ DIP switches on the electronics module, for device name assignment (last part) ▪ Asset management software (FieldCare, DeviceCare, Field Xpert) ▪ Integrated Web server via Web browser and IP address ▪ Device master file (GSD), can be read out via the integrated Web server of the measuring device. ▪ Onsite operation
Configuration of the device name	▪ DIP switches on the electronics module, for device name assignment (last part) ▪ DCP protocol ▪ Asset management software (FieldCare, DeviceCare, Field Xpert) ▪ Integrated Web server

Supported functions	▪ Identification & Maintenance, simple device identifier via:
	  ▪ Control system
	  ▪ Nameplate
	▪ Measured value status
	  The process variables are communicated with a measured value status
	▪ Blinking feature via the local display for simple device identification and assignment
	▪ Device operation via asset management software (e.g. FieldCare, DeviceCare, SIMATIC PDM with FDI package)

System integration	Information regarding system integration . ▪ Cyclic data transmission ▪ Overview and description of the modules ▪ Status coding ▪ Factory setting

16.5 Power supply

Terminal assignment

→ 31

Available device plugs

→ 31

Pin assignment, device plug

→ 31

Supply voltage

Order code for "Power supply"	Terminal voltage		Frequency range
Option **D**	DC 24 V	±20%	–
Option **E**	AC 100 to 240 V	−15 to +10%	50/60 Hz, ±4 Hz
Option **I**	DC 24 V	±20%	–
	AC 100 to 240 V	−15 to +10%	50/60 Hz, ±4 Hz

Power consumption

Transmitter

Max. 10 W (active power)

switch-on current	Max. 36 A (<5 ms) as per NAMUR Recommendation NE 21

Current consumption

Transmitter

- Max. 400 mA (24 V)
- Max. 200 mA (110 V, 50/60 Hz; 230 V, 50/60 Hz)

Power supply failure

- Totalizers stop at the last value measured.
- Depending on the device version, the configuration is retained in the device memory or in the plug-in memory (HistoROM DAT).
- Error messages (incl. total operated hours) are stored.

Overcurrent protection element

The device must be operated with a dedicated circuit breaker, as it does not have an ON/OFF switch of its own.
- The circuit breaker must be easy to reach and labeled accordingly.
- Permitted nominal current of the circuit breaker: 2 A up to maximum 10 A.

Electrical connection

→ 📄 32

Potential equalization

Terminals

Spring-loaded terminals: Suitable for strands and strands with ferrules.
Conductor cross-section 0.2 to 2.5 mm^2 (24 to 12 AWG).

Cable entries

- Cable gland: M20 × 1.5 with cable Ø 6 to 12 mm (0.24 to 0.47 in)
- Thread for cable entry:
  - NPT ½"
  - G ½"
  - M20

Cable specification

→ 📄 28

Overvoltage protection

Mains voltage fluctuations	→ 📄 188
Overvoltage category	Overvoltage category II
Short-term, temporary overvoltage	Up to 1200 V between cable and ground, for max. 5 s
Long-term, temporary overvoltage	Up to 500 V between cable and ground

16.6 Performance characteristics

Reference operating conditions

- Error limits following DIN EN 29104, in future ISO 20456
- Water, typically: +15 to +45 °C (+59 to +113 °F); 0.5 to 7 bar (73 to 101 psi)
- Data as indicated in the calibration protocol
- Accuracy based on accredited calibration rigs according to ISO 17025
- Reference temperature for conductivity measurement: 25 °C (77 °F)

Maximum measured error

o.r. = of reading

Error limits under reference operating conditions

Volume flow

- ±0.5 % o.r. ± 1 mm/s (0.04 in/s)
- Optional: ±0.2 % o.r. ± 2 mm/s (0.08 in/s)

Fluctuations in the supply voltage do not have any effect within the specified range.

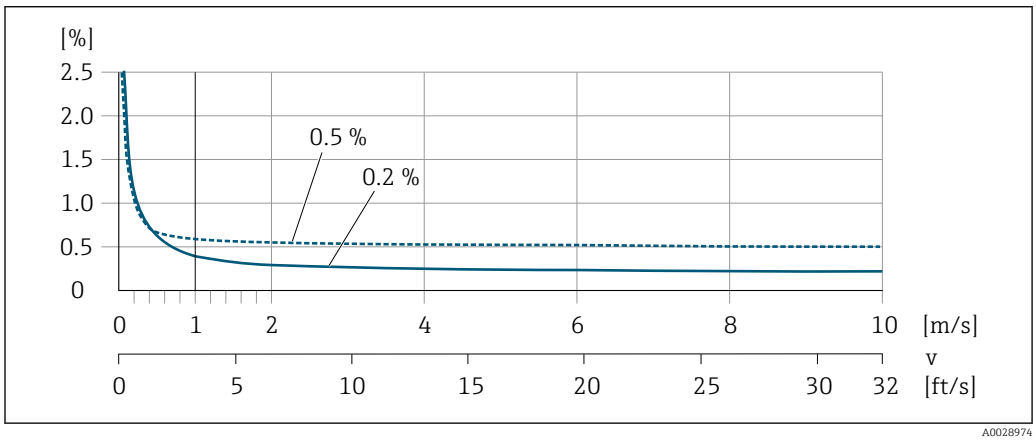

29 *Maximum measured error in % o.r.*

Temperature

±3 °C (±5.4 °F)

Electrical conductivity

The values apply for:
- Devices with stainless steel process connections
- Measurements at a reference temperature of 25 °C (77 °F). At different temperatures, attention must be paid to the temperature coefficient of the medium (typically 2.1 %/K)

Conductivity [µS/cm]	Nominal diameter		Measured error [%] of reading
	[mm]	[in]	
5 to 20	15 to 150	½ to 6	± 20%
> 20 to 50	15 to 150	½ to 6	± 10%
> 50 to 10 000	2 to 8	1/12 to 5/16	± 10%
	15 to 150	½ to 6	▪ Standard: ± 10% ▪ Optional [1]: ± 5%
> 10 000 to 20 000	2 to 150	1/12 to 6	± 10%
> 20 000 to 100 000	2 to 150	1/12 to 6	± 20%

1) Order code for "Calibrated conductivity measurement", option CW

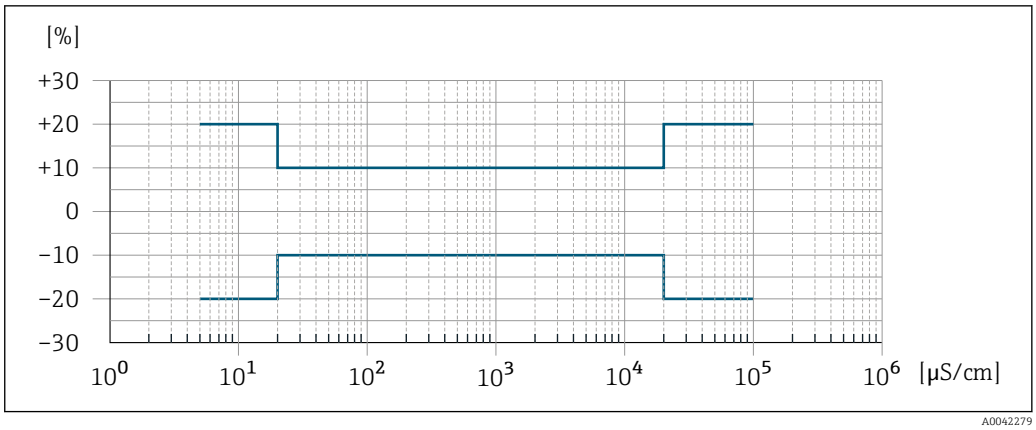

30 *Measured error (standard)*

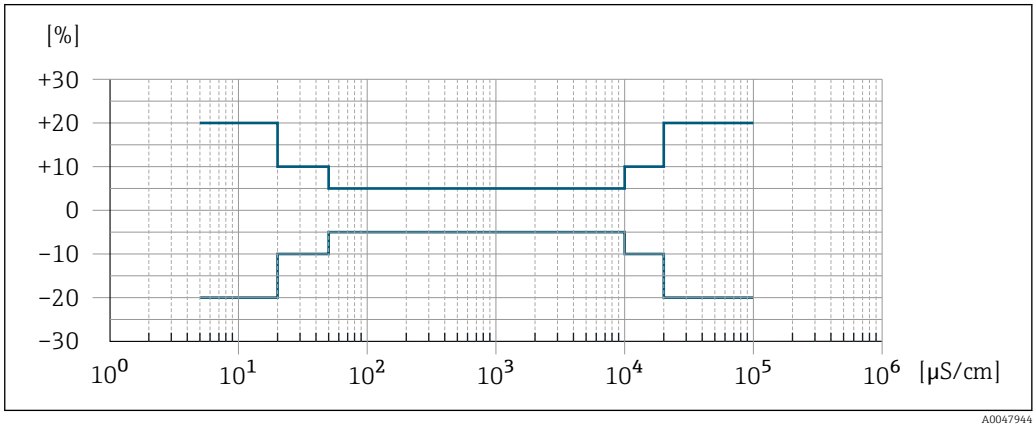

31 *Measured error (optional: order code for "Calibrated conductivity measurement", option CW)*

Repeatability

o.r. = of reading

Volume flow
Max. ±0.1 % o.r. ± 0.5 mm/s (0.02 in/s)

Temperature
±0.5 °C (±0.9 °F)

Electrical conductivity
- Max. ±5 % o.r.
- Max. ±1 % o.r. for DN 15 to 150 in conjunction with process connections made of stainless steel 1.4404 (F316L)

Temperature measurement response time

T_{90} < 15 s

Influence of ambient temperature

Current output

Temperature coefficient	Max. 1 µA/°C

Pulse/frequency output

Temperature coefficient	No additional effect. Included in accuracy.

16.7 Mounting

Mounting requirements	→ 📄 19

16.8 Environment

Ambient temperature range	→ 📄 24 **Temperature tables** Observe the interdependencies between the permitted ambient and fluid temperatures when operating the device in hazardous areas. For detailed information on the temperature tables, see the separate document entitled "Safety Instructions" (XA) for the device.
Storage temperature	The storage temperature corresponds to the operating temperature range of the transmitter and the sensor → 📄 24. ▪ Protect the measuring device against direct sunlight during storage in order to avoid unacceptably high surface temperatures. ▪ Select a storage location where moisture cannot collect in the measuring device as fungus or bacteria infestation can damage the liner. ▪ If protection caps or protective covers are mounted these should never be removed before installing the measuring device.
Atmosphere	Additional protection against condensation and moisture: the sensor housing is potted with a gel. Order code for "Sensor option", option CF "Harsh environment".
Relative humidity	The device is suitable for use in outdoor and indoor areas with a relative humidity of 4 to 95%.
Operating height	According to EN 61010-1 ▪ ≤ 2 000 m (6 562 ft) ▪ > 2 000 m (6 562 ft) with additional overvoltage protection (e.g. Endress+Hauser HAW Series)
Degree of protection	**Transmitter** ▪ IP66/67, Type 4X enclosure, suitable for pollution degree 4 ▪ When the housing is open: IP20, Type 1 enclosure, suitable for pollution degree 2 ▪ Display module: IP20, Type 1 enclosure, suitable for pollution degree 2 **Optional** **External WLAN antenna** IP67
Vibration- and shock-resistance	**Sinusoidal vibration according to IEC 60068-2-6**

- 2 to 8.4 Hz, 3.5 mm peak
- 8.4 to 2 000 Hz, 1 g peak

Vibration broad-band random, according to IEC 60068-2-64

- 10 to 200 Hz, 0.003 g^2/Hz
- 200 to 2 000 Hz, 0.001 g^2/Hz
- Total: 1.54 g rms

Shock half-sine, according to IEC 60068-2-27

6 ms 30 g

Rough handling shocks according to IEC 60068-2-31

Interior cleaning

- Cleaning in place (CIP)
- Sterilization in place (SIP)

Mechanical load

Transmitter housing:
- Protect against mechanical effects, such as shock or impact
- Do not use as a ladder or climbing aid

Electromagnetic compatibility (EMC)

Details are provided in the Declaration of Conformity.

This unit is not intended for use in residential environments and cannot guarantee adequate protection of the radio reception in such environments.

16.9 Process

Medium temperature range

−20 to +150 °C (−4 to +302 °F)

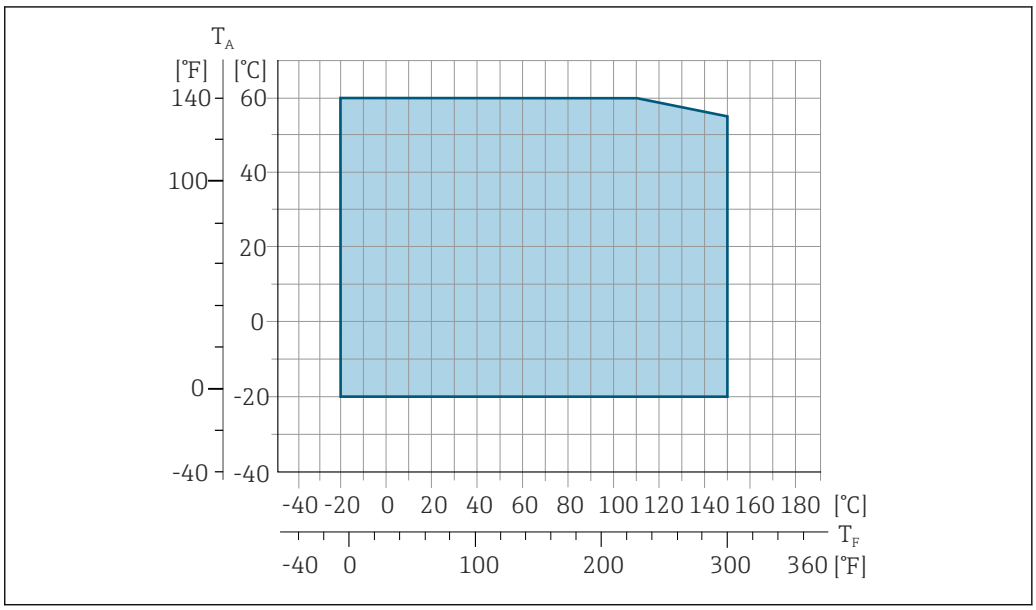

T_A Ambient temperature range
T_F Fluid temperature

The permitted fluid temperature in custody transfer is 0 to +50 °C (+32 to +122 °F).

Conductivity

≥5 µS/cm for liquids in general.

Pressure-temperature ratings

For an overview of the pressure-temperature ratings for the process connections, see the Technical Information

Pressure tightness

Liner: PFA

Nominal diameter		Limit values for absolute pressure in [mbar] ([psi]) for medium temperatures:				
[mm]	[in]	+25 °C (+77 °F)	+80 °C (+176 °F)	+100 °C (+212 °F)	+130 °C (+266 °F)	+150 °C (+302 °F)
2 to 150	1/12 to 6	0 (0)	0 (0)	0 (0)	0 (0)	0 (0)

Flow limit

The diameter of the pipe and the flow rate determine the nominal diameter of the sensor. The optimum velocity of flow is between 2 to 3 m/s (6.56 to 9.84 ft/s). Also match the velocity of flow (v) to the physical properties of the medium:
- v < 2 m/s (6.56 ft/s): for low conductivity values
- v > 2 m/s (6.56 ft/s): for media producing buildup (e.g. milk with a high fat content)

A necessary increase in the flow velocity can be achieved by reducing the sensor nominal diameter.

For an overview of the full scale values for the measuring range, see the "Measuring range" section

Pressure loss

- No pressure loss occurs as of nominal diameter DN 8 (5/16") if the sensor is installed in a pipe with the same nominal diameter.
- Pressure losses for configurations incorporating adapters according to DIN EN 545 → 24

System pressure

→ 24

Vibrations

→ 24

16.10 Mechanical construction

Design, dimensions

For the dimensions and installation lengths of the device, see the "Technical Information" document, "Mechanical construction" section .

Weight

All values (weight exclusive of packaging material) refer to devices with flanges of the standard pressure rating.
The weight may be lower than indicated depending on the pressure rating and design.
Weight specifications including transmitter as per order code for "Housing", option A "Aluminum, coated".

Different values due to different transmitter versions:
- Transmitter version for the hazardous area
  (Order code for "Housing", option A "Aluminum, coated"; Ex d): +2 kg (+4.4 lbs)
- Transmitter version for hygienic area
  (Order code for "Housing", option B "Stainless, hygienic"): +0.2 kg (+0.44 lbs)

Nominal diameter		Weight	
[mm]	[in]	[kg]	[lbs]
2	1/12	4.7	10.4
4	5/32	4.7	10.4
8	5/16	4.7	10.4
15	½	4.6	10.1
25	1	5.5	12.1
40	1 ½	6.8	15.0
50	2	7.3	16.1
65	–	8.1	17.9
80	3	8.7	19.2
100	4	10.0	22.1
125	5	15.4	34.0
150	6	17.8	39.3

Measuring tube specification

Nominal diameter		Pressure rating [1] EN (DIN)	Process connection internal diameter PFA	
[mm]	[in]	[bar]	[mm]	[in]
2	1/12	PN 16/40	2.25	0.09
4	5/32	PN 16/40	4.5	0.18
8	5/16	PN 16/40	9.0	0.35
15	½	PN 16/40	16.0	0.63
–	1	PN 16/40	22.6 [2]	0.89 [2]
25	–	PN 16/40	26.0 [3]	1.02 [3]

1) Depending on process connection and seals used
2) Order code 5H**22
3) Order code 5H**26

Materials

Transmitter housing

Order code for "Housing":
- Option **A** "Aluminum, coated": aluminum, AlSi10Mg, coated
- Option **B** "Stainless, hygienic": stainless steel, 1.4404 (316L)

Window material

Order code for "Housing":
- Option **A** "Aluminum, coated": glass
- Option **B** "Stainless, hygienic": polycarbonate

Seals

Order code for "Housing":
Option **B** "Stainless, hygienic": EPDM and silicone

Cable entries/cable glands

Order code for "Housing", option A "Aluminum, coated"

The various cable entries are suitable for hazardous and non-hazardous areas.

Cable entry/cable gland	Material
Compression fitting M20 × 1.5	Non-Ex: plastic
	Z2, D2, Ex d/de: brass with plastic
Adapter for cable entry with female thread G ½"	Nickel-plated brass
Adapter for cable entry with female thread NPT ½"	

Order code for "Housing", option B "Stainless, hygienic"

The various cable entries are suitable for hazardous and non-hazardous areas.

Cable entry/cable gland	Material
Cable gland M20 × 1.5	Plastic
Adapter for cable entry with female thread G ½"	Nickel-plated brass
Adapter for cable entry with female thread NPT ½"	

Sensor housing

Stainless steel 1.4301 (304)

Measuring tubes

Stainless steel 1.4301 (304)

Liner

PFA (USP Class VI, FDA 21 CFR 177.2600)

Process connections

- Stainless steel, 1.4404 (F316L)
- PVDF
- PVC adhesive sleeve

Electrodes

Standard: 1.4435 (316L)

Seals

- O-ring seal, DN 2 to 25 (1/12 to 1"): EPDM, FKM [2], Kalrez
- Aseptic [3] gasket seal, DN 2 to 150 (1/12 to 6"): EPDM, FKM [2], VMQ (silicone)

Accessories

Protective cover

Stainless steel, 1.4404 (316L)

2) USP Class VI, FDA 21 CFR 177.2600, 3A
3) Aseptic means hygienic design in this context

External WLAN antenna

- Antenna: ASA plastic (acrylonitrile styrene acrylate) and nickel-plated brass
- Adapter: Stainless steel and nickel-plated brass
- Cable: Polyethylene
- Plug: Nickel-plated brass
- Angle bracket: Stainless steel

Grounding rings

- Standard: 1.4435 (316L)
- Optional: Alloy C22, tantalum

Wall mounting kit

Stainless steel, 1.4301 (304) [4)]

Spacer

1.4435 (F316L)

Fitted electrodes	▪ 2 measuring electrodes for signal detection ▪ 1 empty pipe detection electrode for empty pipe detection/temperature measurement (only DN 15 to 150 (½ to 6"))
Process connections	With O-ring seal: ▪ Welding nipple (DIN EN ISO 1127, ODT/SMS, ISO 2037) ▪ Flange (EN (DIN), ASME, JIS) ▪ Flange from PVDF (EN (DIN), ASME, JIS) ▪ External thread ▪ Internal thread ▪ Hose connection ▪ PVC adhesive sleeve With aseptic molded seal: ▪ Coupling (DIN 11851, DIN 11864-1, ISO 2853, SMS 1145) ▪ Flange DIN 11864-2 For information on the different materials used in the process connections → 196
Surface roughness	Electrodes: ▪ Stainless steel, 1.4435 (316L) electropolished ≤ 0.5 µm (19.7 µin) ▪ Alloy C22, 2.4602 (UNSN06022); tantalum ≤ 0.5 µm (19.7 µin) (All data refer to parts in contact with the medium) Liner with PFA: ≤ 0.4 µm (15.7 µin) (All data refer to parts in contact with the medium) Stainless steel process connections: ▪ With O-ring seal: ≤ 1.6 µm (63 µin) ▪ With aseptic seal: Ra_{max} = 0.76 µm (31.5 µin) Optional: Ra_{max} = 0.38 µm (15 µin) electropolished (All data refer to parts in contact with the medium)

4) Does not meet the hygienic design installation guidelines.

16.11 Operability

Languages

Can be operated in the following languages:
- Via local operation
  English, German, French, Spanish, Italian, Dutch, Portuguese, Polish, Russian, Turkish, Chinese, Japanese, Korean, Vietnamese, Czech, Swedish
- Via Web browser
  English, German, French, Spanish, Italian, Dutch, Portuguese, Polish, Russian, Turkish, Chinese, Japanese, Vietnamese, Czech, Swedish
- Via "FieldCare", "DeviceCare" operating tool: English, German, French, Spanish, Italian, Chinese, Japanese

Local operation

Via display module

Equipment:
- Order code for "Display; operation", option F "4-line, illuminated, graphic display; touch control"
- Order code for "Display; operation", option G "4-line, illuminated, graphic display; touch control + WLAN"

Information about WLAN interface → 📖 67

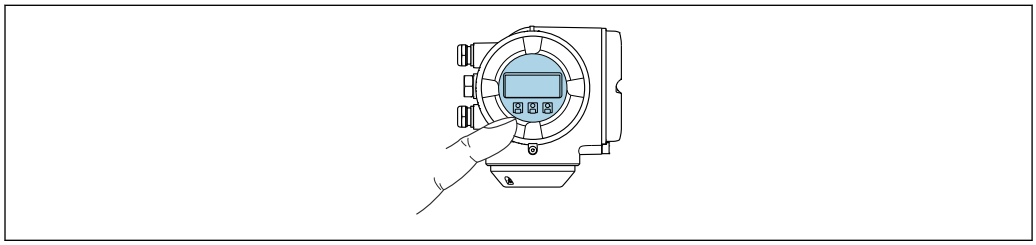

A0026785

32 Operation with touch control

Display elements

- 4-line, illuminated, graphic display
- White background lighting; switches to red in event of device errors
- Format for displaying measured variables and status variables can be individually configured

Operating elements

- External operation via touch control (3 optical keys) without opening the housing: ⊞, ⊟, E
- Operating elements also accessible in the various zones of the hazardous area

Via remote display and operating module DKX001

The remote display and operating module DKX001 is available as an optional extra → 📖 176.

- The remote display and operating module DKX001 is only available for the following housing version: order code for "Housing": option A "Aluminum, coated"
- The measuring device is always supplied with a dummy cover when the remote display and operating module DKX001 is ordered directly with the measuring device. Display or operation at the transmitter is not possible in this case.
- If ordered subsequently, the remote display and operating module DKX001 may not be connected at the same time as the existing measuring device display module. Only one display or operation unit may be connected to the transmitter at any one time.

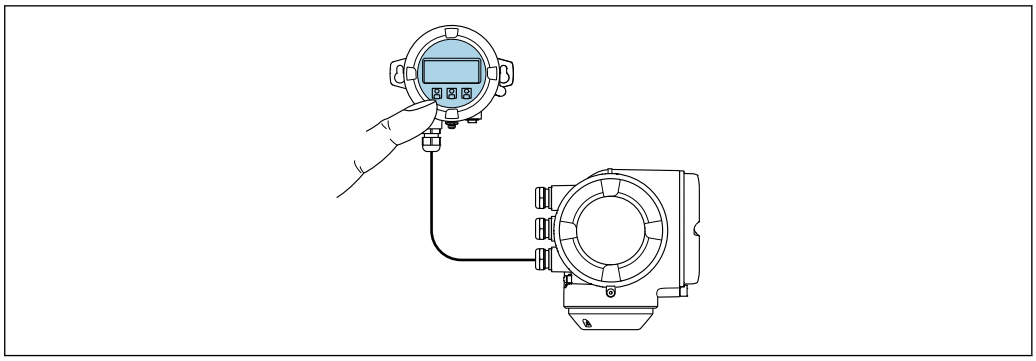

A0026786

33 *Operation via remote display and operating module DKX001*

Display and operating elements

The display and operating elements correspond to those of the display module → 198.

Housing material

The housing material of the display and operating module DKX001 corresponds to the selected material of the transmitter housing.

Transmitter housing		Remote display and operating module
Order code for "Housing"	**Material**	**Material**
Option **A** "Aluminum, coated"	AlSi10Mg, coated	AlSi10Mg, coated

Cable entry

Corresponds to the choice of transmitter housing, order code for "Electrical connection".

Connecting cable

→ 29

Dimensions

Information about dimensions:
"Mechanical construction" section of the "Technical Information" document.

Remote operation

→ 66

Service interface

→ 67

Supported operating tools

Different operating tools can be used for local or remote access to the measuring device. Depending on the operating tool used, access is possible with different operating units and via a variety of interfaces.

Supported operating tools	Operating unit	Interface	Additional information
Web browser	Notebook, PC or tablet with Web browser	▪ CDI-RJ45 service interface ▪ WLAN interface	Special Documentation for the device
DeviceCare SFE100	Notebook, PC or tablet with Microsoft Windows system	▪ CDI-RJ45 service interface ▪ WLAN interface ▪ Fieldbus protocol	→ 178

Supported operating tools	Operating unit	Interface	Additional information
FieldCare SFE500	Notebook, PC or tablet with Microsoft Windows system	▪ CDI-RJ45 service interface ▪ WLAN interface ▪ Fieldbus protocol	→ 🗎 178
Field Xpert	SMT70/77/50	▪ All fieldbus protocols ▪ WLAN interface ▪ Bluetooth ▪ CDI-RJ45 service interface	Operating Instructions BA01202S Device description files: Use update function of handheld terminal
SmartBlue app	Smart phone or tablet with iOs or Android	WLAN	→ 🗎 178

Other operating tools based on FDT technology with a device driver such as DTM/iDTM or DD/EDD can be used for device operation. These operating tools are available from the individual manufacturers. Integration into the following operating tools, among others, is supported:

- Field Device Manager (FDM) from Honeywell → www.process.honeywell.com
- FieldMate from Yokogawa → www.yokogawa.com
- PACTWare → www.pactware.com

The related device description files are available: www.endress.com → Download Area

Web server

With the integrated web server, the device can be operated and configured via a web browser via Ethernet-APL, the the service interface (CDI-RJ45) or via the WLAN interface . The structure of the operating menu is the same as for the local display. In addition to the measured values, device status information is also displayed and allows users to monitor the status of the device. Furthermore the device data can be managed and the network parameters can be configured.

Access to the network is required for the Ethernet-APL connection.

A device that has a WLAN interface (can be ordered as an option) is required for the WLAN connection: order code for "Display; operation", option G "4-line, illuminated; touch control + WLAN". The device acts as an Access Point and enables communication by computer or a mobile handheld terminal.

Supported functions
Data exchange between the operating unit (such as a notebook for example) and the measuring device:
- Upload the configuration from the measuring device (XML format, configuration backup)
- Save the configuration to the measuring device (XML format, restore configuration)
- Export event list (.csv file)
- Export parameter settings (.csv file or PDF file, document the measuring point configuration)
- Export the Heartbeat verification log (PDF file, only available with the "Heartbeat Verification" application package)
- Flash firmware version for device firmware upgrade, for instance
- Download driver for system integration
- Visualize up to 1000 saved measured values (only available with the **Extended HistoROM** application package → 🗎 205)

Web server special documentation → 🗎 207

HistoROM data management

The measuring device features HistoROM data management. HistoROM data management comprises both the storage and import/export of key device and process data, making operation and servicing far more reliable, secure and efficient.

When the device is delivered, the factory settings of the configuration data are stored as a backup in the device memory. This memory can be overwritten with an updated data record, for example after commissioning.

Additional information on the data storage concept

There are different types of data storage units in which device data are stored and used by the device:

	HistoROM backup	T-DAT	S-DAT
Available data	▪ Event logbook such as diagnostic events for example ▪ Parameter data record backup ▪ Device firmware package ▪ Driver for system integration for exporting via Web server, e.g: GSDML for PROFINET	▪ Measured value logging ("Extended HistoROM" order option) ▪ Current parameter data record (used by firmware at run time) ▪ Peakhold indicator (min/max values) ▪ Totalizer values	▪ Sensor data: nominal diameter etc. ▪ Serial number ▪ Calibration data ▪ Device configuration (e.g. SW options, fixed I/O or multi I/O)
Storage location	Fixed on the user interface board in the connection compartment	Attachable to the user interface board in the connection compartment	In the sensor plug in the transmitter neck part

Data backup

Automatic

- The most important device data (sensor and transmitter) are automatically saved in the DAT modules
- If the transmitter or measuring device is replaced: once the T-DAT containing the previous device data has been exchanged, the new measuring device is ready for operation again immediately without any errors
- If the sensor is replaced: once the sensor has been replaced, new sensor data are transferred from the S-DAT in the measuring device and the measuring device is ready for operation again immediately without any errors
- If exchanging the electronics module (e.g. I/O electronics module): Once the electronics module has been replaced, the software of the module is compared against the current device firmware. The module software is upgraded or downgraded where necessary. The electronics module is available for use immediately afterwards and no compatibility problems occur.

Manual

Additional parameter data record (complete parameter settings) in the integrated device memory HistoROM backup for:

- Data backup function
  Backup and subsequent restoration of a device configuration in the device memory HistoROM backup
- Data comparison function
  Comparison of the current device configuration with the device configuration saved in the device memory HistoROM backup

Data transmission

Manual

- Transfer of a device configuration to another device using the export function of the specific operating tool, e.g. with FieldCare, DeviceCare or Web server: to duplicate the configuration or to store in an archive (e.g. for backup purposes)
- Transmission of the drivers for system integration via Web server, e.g.:
  GSDML for PROFINET

Event list

Automatic
- Chronological display of up to 20 event messages in the events list
- If the **Extended HistoROM** application package (order option) is enabled: up to 100 event messages are displayed in the events list along with a time stamp, plain text description and remedial measures
- The events list can be exported and displayed via a variety of interfaces and operating tools e.g. DeviceCare, FieldCare or Web server

Data logging

Manual
If the **Extended HistoROM** application package (order option) is enabled:
- Record up to 1000 measured values via 1 to 4 channels
- User configurable recording interval
- Record up to 250 measured values via each of the 4 memory channels
- Export the measured value log via a variety of interfaces and operating tools e.g. FieldCare, DeviceCare or web server

16.12 Certificates and approvals

Current certificates and approvals that are available for the product can be selected via the Product Configurator at www.endress.com:

1. Select the product using the filters and search field.
2. Open the product page.
3. Select **Configuration**.

CE mark	The device meets the legal requirements of the applicable EU Directives. These are listed in the corresponding EU Declaration of Conformity along with the standards applied. Endress+Hauser confirms successful testing of the device by affixing to it the CE mark.
UKCA marking	The device meets the legal requirements of the applicable UK regulations (Statutory Instruments). These are listed in the UKCA Declaration of Conformity along with the designated standards. By selecting the order option for UKCA marking, Endress+Hauser confirms a successful evaluation and testing of the device by affixing the UKCA mark. Contact address Endress+Hauser UK: Endress+Hauser Ltd. Floats Road Manchester M23 9NF United Kingdom www.uk.endress.com
Ex approval	The devices are certified for use in hazardous areas and the relevant safety instructions are provided in the separate "Safety Instructions" (XA) document. Reference is made to this document on the nameplate.

Sanitary compatibility	▪ 3-A SSI 28-06 or more recent
	  ▪ Confirmation by affixing the 3-A logo for measuring devices with the order code for "Additional approval", option LP "3-A".
	  ▪ The 3-A approval refers to the measuring device.
	  ▪ When installing the measuring device, ensure that no liquid can accumulate on the outside of the measuring device.
	  Remote transmitters must be installed in accordance with the 3-A Standard.
	  ▪ Accessories (e.g. weather protection cover, wall holder unit) must be installed in accordance with the 3-A Standard.
	  Each accessory can be cleaned. Disassembly may be necessary under certain circumstances.
	▪ EHEDG Type EL Class I
	  ▪ Confirmation by affixing the EHEDG symbol for measuring devices with the order code for "Additional approval", option LT "EHEDG".
	  ▪ EPDM is not a suitable seal material for fluids with a fat content > 8 %.
	  ▪ To meet the requirements for EHEDG certification, the device must be used with process connections in accordance with the EHEDG position paper entitled "Easy Cleanable Pipe Couplings and Process Connections" (www.ehedg.org).
	▪ FDA 21 CFR 177
	▪ Food Contact Materials Regulation (EC) 1935/2004
	▪ Food Contact Materials Regulation China GB 4806
	▪ Pasteurized Milk Ordinance (PMO)

Pharmaceutical compatibility	▪ FDA 21 CFR 177
	▪ USP <87>
	▪ USP <88> Class VI 121 °C
	▪ TSE/BSE Certificate of Suitability
	▪ cGMP
	  Devices with the order code for "Test, certificate", option JG "Conformity with cGMP-derived requirements, declaration" comply with the requirements of cGMP with regard to the surfaces of parts in contact with the medium, design, FDA 21 CFR material conformity, USP Class VI tests and TSE/BSE conformity.
	  A serial number-specific declaration is generated.

Certification PROFINET with Ethernet-APL	**PROFINET interface**
	The measuring device is certified and registered by the PNO (PROFIBUS Nutzerorganisation e.V. / PROFIBUS User Organization). The measuring system meets all the requirements of the following specifications:
	▪ Certified according to:
	  ▪ Test specification for PROFINET devices
	  ▪ PROFINET PA Profile 4
	  ▪ PROFINET Netload Robustness Class 2 10 Mbps
	  ▪ APL conformance test
	▪ The device can also be operated with certified devices of other manufacturers (interoperability)
	▪ The device supports PROFINET S2 system redundancy.

Radio approval	The measuring device has radio approval. For detailed information on the radio approval, see the Special Documentation

Pressure Equipment Directive	▪ With the marking: a) PED/G1/x (x = category) or b) UK/G1/x (x = category) on the sensor nameplate, Endress+Hauser confirms compliance with the "Essential Safety Requirements" a) specified in Annex I of the Pressure Equipment Directive 2014/68/EU or b) Schedule 2 of Statutory Instruments 2016 No. 1105. ▪ Devices not bearing this marking (without PED or UKCA) are designed and manufactured according to sound engineering practice. They meet the requirements of a) Art. 4 Para. 3 of the Pressure Equipment Directive 2014/68/EU or b) Part 1, Para. 8 of Statutory Instruments 2016 No. 1105. The scope of application is indicated a) in diagrams 6 to 9 in Annex II of the Pressure Equipment Directive 2014/68/EU or b) Schedule 3, Para. 2 of Statutory Instruments 2016 No. 1105.
Additional certification	**PWIS-free** PWIS = paint-wetting impairment substances Order code for "Service": ▪ Option **HC**: PWIS-free (version A) ▪ Option **HD**: PWIS-free (version B) ▪ Option **HE**: PWIS-free (version C) For more information on PWIS-free certification, see "Test specification" document TS01028D
Other standards and guidelines	▪ EN 60529 Degrees of protection provided by enclosures (IP code) ▪ EN 61010-1 Safety requirements for electrical equipment for measurement, control and laboratory use - general requirements ▪ IEC/EN 61326-2-3 Emission in accordance with Class A requirements. Electromagnetic compatibility (EMC requirements). ▪ NAMUR NE 21 Electromagnetic compatibility (EMC) of industrial process and laboratory control equipment ▪ NAMUR NE 32 Data retention in the event of a power failure in field and control instruments with microprocessors ▪ NAMUR NE 43 Standardization of the signal level for the breakdown information of digital transmitters with analog output signal. ▪ NAMUR NE 53 Software of field devices and signal-processing devices with digital electronics ▪ NAMUR NE 105 Specifications for integrating fieldbus devices in engineering tools for field devices ▪ NAMUR NE 107 Self-monitoring and diagnosis of field devices ▪ NAMUR NE 131 Requirements for field devices for standard applications ▪ ETSI EN 300 328 Guidelines for 2.4 GHz radio components. ▪ EN 301489 Electromagnetic compatibility and radio spectrum matters (ERM).

16.13 Application packages

Many different application packages are available to enhance the functionality of the device. Such packages might be needed to address safety aspects or specific application requirements.

The application packages can be ordered with the device or subsequently from Endress+Hauser. Detailed information on the order code in question is available from your local Endress+Hauser sales center or on the product page of the Endress+Hauser website: www.endress.com.

Diagnostic functionality	Order code for "Application package", option EA "Extended HistoROM" Comprises extended functions concerning the event log and the activation of the measured value memory. Event log: Memory volume is extended from 20 message entries (standard version) to up to 100 entries. Data logging (line recorder): ▪ Memory capacity for up to 1000 measured values is activated. ▪ 250 measured values can be output via each of the 4 memory channels. The recording interval can be defined and configured by the user. ▪ Measured value logs can be accessed via the local display or operating tool e.g. FieldCare, DeviceCare or Web server. For detailed information, see the Operating Instructions for the device.
Heartbeat Technology	Order code for "Application package", option EB "Heartbeat Verification + Monitoring" **Heartbeat Verification** Meets the requirement for traceable verification to DIN ISO 9001:2008 Chapter 7.6 a) "Control of monitoring and measuring equipment". ▪ Functional testing in the installed state without interrupting the process. ▪ Traceable verification results on request, including a report. ▪ Simple testing process via local operation or other operating interfaces. ▪ Clear measuring point assessment (pass/fail) with high test coverage within the framework of manufacturer specifications. ▪ Extension of calibration intervals according to operator's risk assessment. **Heartbeat Monitoring** Continuously supplies data, which are characteristic of the measuring principle, to an external condition monitoring system for the purpose of preventive maintenance or process analysis. These data enable the operator to: ▪ Draw conclusions - using these data and other information - about the impact the process influences (e.g. formation of buildup, magnetic field interference etc.) have on measuring performance over time. ▪ Schedule servicing in time. ▪ Monitor the process or product quality. For detailed information, see the Special Documentation for the device.
Cleaning	Order code for "Application package", option EC "ECC electrode cleaning " The electrode cleaning circuit (ECC) function has been developed to have a solution for applications where magnetite (Fe_3O_4) deposits frequently occur (e.g. hot water). Since magnetite is highly conductive this build up leads to measuring errors and ultimately to

the loss of signal. The application package is designed to avoid build-up of very conductive matter and thin layers (typical of magnetite).

For detailed information, see the Operating Instructions for the device.

16.14 Accessories

Overview of accessories available for order → 176

16.15 Supplementary documentation

For an overview of the scope of the associated Technical Documentation, refer to the following:
- *Device Viewer* (www.endress.com/deviceviewer): Enter the serial number from the nameplate
- *Endress+Hauser Operations app*: Enter serial number from nameplate or scan matrix code on nameplate.

Standard documentation

Brief Operating Instructions

Brief Operating Instructions for the sensor

Measuring device	Documentation code
Proline Promag H	KA01289D

Brief Operating Instructions for transmitter

Measuring device	Documentation code
Proline 300	KA01516D

Technical Information

Measuring device	Documentation code
Promag H 300	TI01223D

Description of Device Parameters

Measuring device	Documentation code
Promag 300	GP01172D

Supplementary device-dependent documentation

Safety instructions

Safety instructions for electrical equipment for hazardous areas.

Contents	Documentation code
ATEX/IECEx Ex d/Ex de	XA01414D
ATEX/IECEx Ex ec	XA01514D
cCSAus XP	XA01515D
cCSAus Ex d/ Ex de	XA01516D
cCSAus Ex nA	XA01517D

Contents	Documentation code
INMETRO Ex d/Ex de	XA01518D
INMETRO Ex ec	XA01519D
NEPSI Ex d/Ex de	XA01520D
NEPSI Ex nA	XA01521D
EAC Ex d/Ex de	XA01656D
EAC Ex nA	XA01657D
JPN Ex d	XA01775D

Remote display and operating module DKX001

Contents	Documentation code
ATEX/IECEx Ex i	XA01494D
ATEX/IECEx Ex ec	XA01498D
cCSAus IS	XA01499D
cCSAus Ex nA	XA01513D
INMETRO Ex i	XA01500D
INMETRO Ex ec	XA01501D
NEPSI Ex i	XA01502D
NEPSI Ex nA	XA01503D

Special Documentation

Contents	Documentation code
Information on the Pressure Equipment Directive	SD01614D
Radio approvals for WLAN interface for A309/A310 display module	SD01793D
Web server	SD02768D
Remote display and operating module DKX001	SD01763D

Contents	Documentation code
Heartbeat Technology	SD02729D
Web server	SD02768D

Installation Instructions

Contents	Comment
Installation instructions for spare part sets and accessories	▪ Access the overview of all the available spare part sets via *Device Viewer* → 🗎 174 ▪ Accessories available for order with Installation Instructions → 🗎 176

Index

N

O

P

R

S

T

U

V

W

71598577

www.addresses.endress.com

Endress+Hauser

People for Process Automation