# Smart measuring points with Liquiline Control

The Liquiline Control CDC90 system automatically cleans and calibrates pH and ORP sensors

- Liquiline Control CDC90
- Benefits at a glance
- Industry focus
- Technical details


Endress+Hauser

# Liquiline Control CDC90

**With Liquiline Control CDC90, you use a smart system for pH and ORP measurement that automatically cleans and calibrates your sensors without interrupting the process. This saves you time and maintenance costs.**

**When do you benefit from this system?**

- When processes require accurate and reproducible measurements at all times.
- When sensors need to be cleaned and/or calibrated frequently.
- When the measuring point is in a hard-to-reach or hazardous environment.
- When sensors should measure at specific intervals and remain operational in between.
- When the measuring point cannot be adequately maintained manually.

Visit the product website


Reinigungs- und Kalibriersystem-
Liquiline Control CDC90

# Benefits at a glance

Liquiline Control CDC90 revolutionizes the automation of Memosens pH and ORP measuring points in many industries. It is a fully automatic solution for cleaning, calibrating, and monitoring up to two sensors.

A complete measuring setup includes Liquiline Control CDC90, a retractable assembly (e.g., Cleanfit), a pH/ORP or combination sensor, as well as lines for compressed air, water, and electricity, and a digital measuring cable.

**Increased work safety**
Liquiline Control CDC90 minimizes maintenance and servicing tasks – a significant advantage for your employees, especially in hard-to-reach and hazardous environments.

**Minimize operating costs**
Optimal buffer and cleaning agent consumption at the measuring points thanks to the sophisticated hydraulics of Liquiline Control CDC90.

**High safety, quality, and yield**
Customizable cleaning and calibration cycles help to timely eliminate blockages and contamination of the sensors, ensuring precise and reliable measurements at all times.


**2 measuring points with one system**
With dual-channel capability, you simplify the operation of your measuring points and minimize installation costs.

**Reproducible calibration results**
Guaranteed by smart media distribution and dosing.

**Strong Partner**
Measurement technology, consulting, and global support from a single source make the automation of your measuring points simple and future-proof.

**Flexibility**
The system can be adapted to the requirements of different industries through various retractable assemblies and sensors.

**Seamless integration into your process control system**
thanks to certified communication standards. Options include analog or digital signals as well as fieldbus, covering 0/4 ... 20 mA, PROFIBUS DP, Modbus TCP, EtherNet/IP, PROFINET, and web server technology.

# Industry focus

The plug-and-play system Liquiline Control CDC90 automates your Memosens pH and ORP measuring points in many industries. It automatically cleans, calibrates, and adjusts up to two sensors. This reduces your maintenance effort for the measuring point and increases work safety in hazardous areas. With precise and reliable measurement technology, you can increase your yield and ensure the quality of your products. Liquiline Control CDC90 can be easily integrated into existing plant infrastructures and allows convenient connection to any process control system.

- Power & Energy
- Mining, Minerals & Metals
- Food & Beverage

# Power & Energy

In the power plant industry, precise quality monitoring of liquids, especially pH levels, is crucial. The pH value plays a central role in numerous process steps and is a critical parameter to prevent corrosion and deposits in the water-steam cycle.

However, it's not just limited to that: accurate pH monitoring is also essential in cooling water systems and flue gas desulfurization plants. Precise pH monitoring helps ensure the efficiency and longevity of your plants while reducing operating costs. The fully automatic **Liquiline Control CDC90** cleaning and calibration system for pH and ORP measurement points provides valuable support in this regard.

Thermal power plants

# Thermal power plants

In flue gas desulfurization plants of thermal power plants, environmentally harmful sulfur dioxide is bound. This occurs in a scrubber (absorber tower) through a washing suspension. For efficient desulfurization, the pH value of the suspension must be precisely monitored and controlled.

Accurate pH measurement is crucial to optimize the entire process. Typically, measurements are taken at several points in the scrubber to ensure that desulfurization proceeds evenly and effectively. A lime-based washing suspension is usually used, which places high demands on the measurement technology.

One of the biggest challenges in FGD plants is the formation of lime deposits on the sensors. These deposits can impair measurement accuracy and require regular maintenance and cleaning.

Our innovative automatic **Liquiline Control CDC90** cleaning and calibration systems offer you numerous advantages: efficient data collection, reduced operating costs, and less manual effort.

Rely on state-of-the-art technology to maximize the efficiency of your plants while protecting the environment.

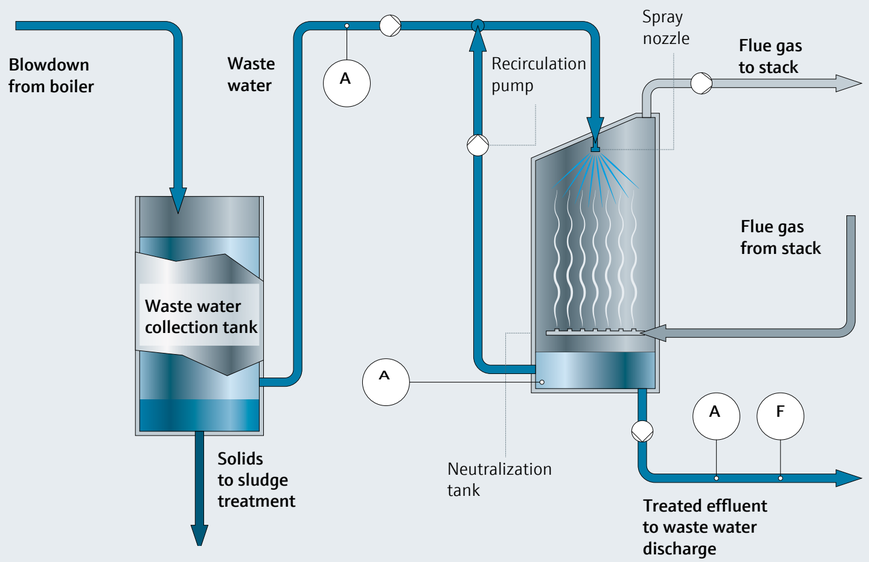


**Your challenge**
**Measuring task:** pH measurement in flue gas desulfurization
**Measuring point:** Recirculation pipe
**Measuring range up to:** Pre-scrubber: pH <2, Lime scrubber: pH 5 - 7
**Medium:** Lime milk
**Process temperature:** 60 - 80°C
**Process pressure:** <5 bar
**Specific challenges:** A high content of undissolved solids requires special assemblies to prevent disturbances.

**Our answer**
Our analytical instruments are designed for harsh environments and the most challenging conditions. Measuring points consist of robust pH sensors, retractable assemblies, and the **Liquiline Control CDC90** cleaning and calibration system. Automated sensor cleaning and calibration extend the lifespan of the sensors in the challenging environment and minimize operational effort.

# Mining, Minerals & Metals

A major challenge is ensuring the accuracy and precision of pH measurements, as the pH value is crucial for many processes such as mineral processing and metal extraction. Environmental conditions such as temperature, pressure, and the chemical composition of the samples can significantly affect measurement accuracy.

pH measuring points must be regularly calibrated and maintained to ensure accurate measurements, which can be time-consuming and resource-intensive in industrial applications.

Tailings

# Tailings management

pH measurements in tailings management are very challenging. Tailings often contain high amounts of solids that can block sensors and impair measurement accuracy. The composition of the tailings can also be chemically aggressive, affecting reliability and shortening the lifespan of pH sensors. Possible high temperatures can also impact the stability and accuracy of pH measurements.

Deposits on the sensors distort the measurements, and various chemicals can contaminate the sensors. This necessitates regular cleaning and maintenance of the sensors to maintain measurement accuracy.

To overcome these challenges, robust and low-maintenance pH measurement systems are required, specifically designed for use in demanding environments.

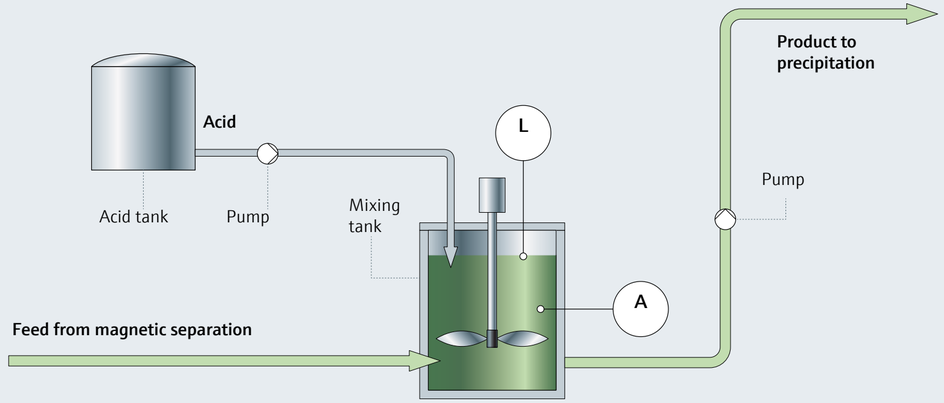


**Your challenge**
**Measuring task:** Reliable pH measurement in sedimentation tanks and processing plants
**Measuring point:** Tank
**Measuring range:** <4 pH
**Medium:** Solution with dissolved and undissolved minerals and solids
**Process temperature:** Up to 60°C
**Process pressure:** 1-3 bar
**Specific challenges:** Reliable operation with minimal intervention by operating personnel

**Our answer**
Automatic cleaning and calibration of the installed pH sensors with **Liquiline Control CDC90** extend their lifespan and increase the availability of measuring points in remote locations without maintenance personnel.

# Food & Beverage

One of the biggest challenges is ensuring the accuracy and precision of measurements in processes, as the pH value is crucial for the quality, safety, and consistency of products. Fluctuations in pH can significantly affect the taste, freshness, and shelf life of the final product. Environmental conditions such as temperature and the composition of the liquids can impact measurement accuracy. Therefore, sensors must be regularly calibrated and maintained to ensure accuracy. This can be time-consuming and resource-intensive.

Food preparation

Food filling

# Food preparation

For high production capacity in food production, efficiency is crucial. This requires maintaining constant production and protecting it from interruptions.

Accurate pH measurements are therefore essential. With automatic cleaning and calibration of your pH and ORP sensors using **Liquiline Control CDC90**, you have support for process control and management. Blockages and contamination of the sensors stand no chance.

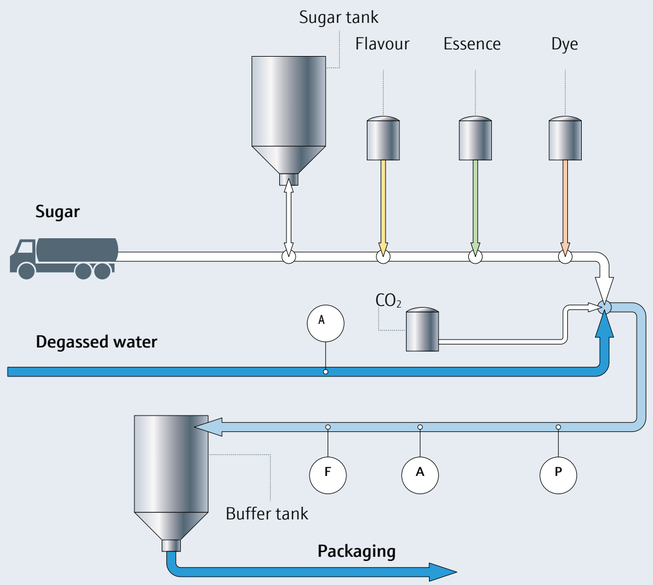


**Your challenge**
**Measuring task:** Control of correct dosing
**Measuring point:** Mixing tanks and transport lines
**Measuring range up to:** pH 1-7
**Medium:** Beverages, dairy products, cleaning agents
**Process temperature:** 5 - 100°C (during cleaning cycles)
**Process pressure:** 1 - 6 bar
**Specific challenges:** Accurate measurements required, highly fluctuating temperatures, pH values between production and cleaning phases, downtime

**Our answer**
**The Liquline Control CDC90** is a fully automatic cleaning and calibration system that helps ensure reproducible measurements. It allows for continuous measurement without constant supervision – even during the night, which is particularly advantageous in manufacturing processes. Thanks to highly precise measurements, product quality is guaranteed. The reduced consumption of buffers and cleaning agents saves costs, especially with expensive and sensitive products.

# Food filling

pH measurements in bottling are crucial for the shelf life of food products. The pH measurement is often the last quality control before bottling. It allows for the detection of cleaning solutions in the product, thus ensuring quality.

Challenges in the process include the accuracy and reproducibility of measurements, calibration of measuring instruments, temperature dependence, sensor contamination, and integration into automated systems.

Fully automatic cleaning and calibration solutions for the sensors increase the availability of your measuring points. They help achieve consistently precise measurements and reproducible values around the clock.

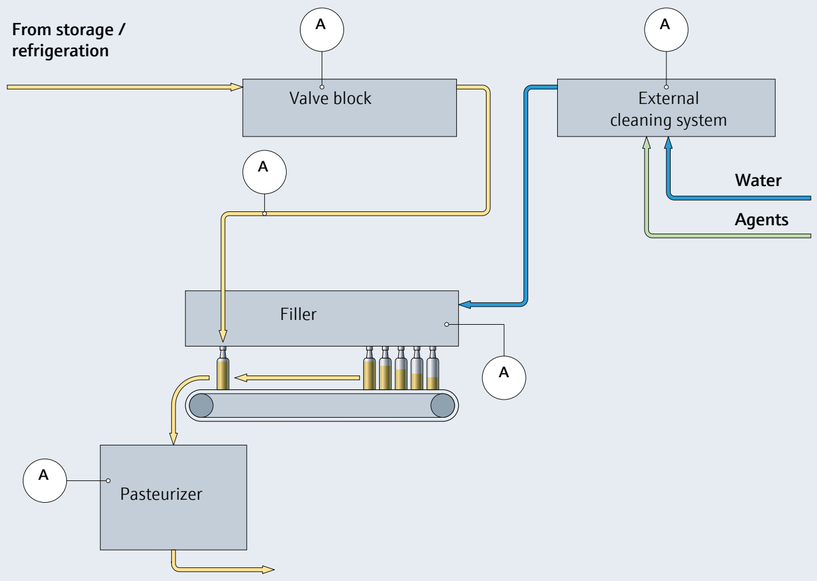


**Your challenge**
**Measuring task:** Quality control before filling
**Measuring point:** Filling plant
**Measuring range up to:** pH 2 to 7
**Medium:** e.g., sugar- and fat-containing liquids
**Process temperature:** 5-100 °C
**Process pressure:** 0.5 - 6 bar
**Specific challenges:** High demands on the availability and precision of the measurement technology.

**Our answer**
**Liquiline Control CDC90** offers fully automatic cleaning and calibration for your pH and ORP sensors. This ensures reproducible measurement values and enables continuous measurements, regardless of the time of day or night. Additionally, it helps reduce the consumption of buffer and cleaning agents, thereby minimizing your costs.

# Liquiline Control CDC90 – technical details

**CDC90 control unit**
Liquiline transmitter with industry PC and touch display

**Ethernet switch**
Connection to PLC

**Valve unit**
Dedicated ON/OFF valves for each channel


**Pneumatic control unit**
Pneumatic pilot valves for assembly movement, pump control, valves for sample line isolation, electrical connections

**Pumps and canisters module**
Transportation and storage of buffer solutions and cleaning agents

# People for Process Automation

The fully automatic system Liquiline Control CDC90 for pH and ORP measuring points in all industries. It automatically cleans, calibrates, and adjusts up to two sensors. This reduces maintenance effort, improves work safety in hazardous areas, and ensures the yield and quality of your product.

Visit us on social media


Endress+Hauser