Régie du bâtiment Québec

Direction générale de l'inspection

Montréal, February 12, 2019

MR. ROGER WENIGE
ENDRESS + HAUSER CANADA GMBH + CO. KG
HAUPTSTRASSE 1
MAULBURG
GERMANY DE-79689

Manufacturer : ENDRESS + HAUSER CANADA GMBH + CO. KG
HAUPTSTRASSE 1
MAULBURG
GERMANY DE-79689

Our reference : 952910
Design number : SCOPE OF REGISTRATION #961003390, DWG #960008564

Subject: Registration of designs – Confirmation of approval

Dear Sir,

The Régie du bâtiment du Québec (RBQ) informs you that your application for the registration of designs has been evaluated and that the design was registered under the Canadian Registration Number (CRN\NEC) : 0F12978.56

We bring your attention this requirement of the regulation respecting pressure vessels, and the codes and standards adopted :

- The manufacturer must maintain a valid quality control program to produce according to the CRN.

This notice of approval does not relieve the constructor of his responsibilities with respect to the design or construction of equipment manufactured according to this CRN.

Yours sincerely,

Bureau d'expertise et d'homologation en équipements sous pression

Montréal
545, boul. Crémazie Est, 7e étage
Montréal (Québec) H2M 2V2
Téléphone : 514 873-6459
Sans frais : 1 866 262-2084
www.rbq.gouv.qc.ca

Régie du bâtiment Québec

Statutory Declaration Registration of Fittings

Endress+Hauser
People for Process Automation

(a) Design Qualification

I[1] Michael Frei
(Name of applicant)

Quality Management Representative, responsible for the Integrated Quality Management System
(Position eg, president, plant manager, chief eng.)

of Endress+Hauser SE+Co.KG
(name of company)

Located at See attached worldwide locations appendix
(plant address)

do solemnly declare that the fittings listed hereunder, which are subject to the Boilers & Pressure Vessels Act:

☐ comply with all the requirements of the ANSI/ASME codes as to their dimensions, material, identification & service for which are required:

Or

☒ are not covered by the provisions of the ANSI/ASME codes, and are therefore constructed to comply with ASME B31.3 _____ code and standard, and are designed to the best current engineering practice, as shown by the supporting test data.

(b) Quality control of Manufacture

I further declare the manufacture of these fittings is controlled by a quality control program which complies with the requirements of ISO 9001:2015, and has been verified by the following authority or authorized agency SQS_____

The fittings[2] covered by this declaration, for which I seek registration, are Category F – Solicap M

In support of the application, the following information, calculations and/or test data are attached:
Scope of CRN Registration, Reports, Drawings, Calculations

Declared before me at _____

In the of _____ of _____

The ____ day of _____ AD 2 0 1 ___

_____ *A (commissioner for oaths)*

_____ *Signature of Declarer*[3]

For Official Use Only

The application is accepted for registration in Category _____ in accordance with the Boilers and Pressure Vessels Act and CSA Standard B51.

This registration must be revalidated after ten (10) years from the date of acceptance.

Registered Number CRN OF12978.56

For the Chief Inspector _____

Date FEB 12 2019

---

[1] *Three completed copied of Statutory Declaration form together with three copies of Catalogs, drawings of Bulletins illustrating above fittings shall be submitted.*

[2] *All fittings are required to be registered in the name of the Manufacturer.*

[3] *This form shall be completed and signed by the president of highest official in the manufacturing plan where the fitting is produced.*

Endress+Hauser
People for Process Automation

WORLDWIDE LOCATIONS APPENDIX – PAGE 1 OF 2

ENDRESS+HAUSER SE+Co. KG MANUFACTURING LOCATIONS & CERTIFYING AUTHORITIES

(rev. 28/November/2018)

Endress+Hauser SE+Co. KG
Hauptstrasse 1
79689 Maulburg
Germany
ISO 9001 Certified by SQS

Endress+Hauser (Suzhou) Automation Instrumentation Co. Ltd.
China – Singapore
Suzho Industrial Park (SIP)
Su Hong Zhong Lu No. 491
Jiangsu Province
215021 Suzhou, P.R. China
ISO 9001 Certified by SQS

Endress+Hauser (India)
Automation Instrumentation Pvt. Ltd.
M-192, Waluj MIDC
Aurangabad – 431136,
Maharashtra State, India
ISO 9001 Certified by SQS

Endress+Hauser Yamanashi Co., Ltd.
862-1 Mitsukunugi
Sakaigawa-cho
Fuefuki-shi
406 0846 Yamanashi, Japan
ISO 9001 Certified by SQS

Endress+Hauser (USA)
Automation Instrumentation Inc.
2340 Endress Place
Greenwood, Indiana 46143, USA
ISO 9001 Certified by SQS

Endress+Hauser (Brazil)
Instrumentacao e Automacao Ltda.
Estrada Municipal Antonio Sesti
600 Bairro Recreio Costa Verde
Itatiba/SP – 13254-085, Brazil
ISO 9001 Certified by SQS

Endress+Hauser
People for Process Automation

WORLDWIDE LOCATIONS APPENDIX – PAGE 2 OF 2

ENDRESS+HAUSER SE+Co. KG MANUFACTURING LOCATIONS & CERTIFYING AUTHORITIES

(rev. 28/November/2018)

Endress+Hauser SE+Co. KG
Miramstrasse 87
34123 Kassel
Germany
ISO 9001 Certified by SQS

Endress+Hauser SE+Co. KG
Queremathe 2
14532 Stahnsdorf
Germany
ISO 9001 Certified by SQS

QUÉBEC
ENREGISTRÉ
NEC (CRN) : OF 12978.56
DATE : FEB 12 2019

OF12978.56

A2 Evaluation based on proof pressure tests or calculations

The following table shows the overview for Solicap M, the process connections refer to a calculation or to a proof test.
Note: The correlation between the drawing and the associated process connection is defined in the first column. For e.g. No.1.1 drwg. 960008564 → 1.X and X.1 = thread R1 ½ and thread 1 ½ NPT.

A2.1 SOLICAP M FTI55/56 rod and rope (see drawing Solicap M SCAP 960008564)

No.	type of test specimen	process connec-tion	classification of material	temp. range [°C]	process pressure [bar]	verified through
1.1	Solicap M FTI55	R 1 1/2"	**thread** 316L (A-479)	PPS -50 to +180 PE -50 to +80	20(1)	Solicap-thread-R 1 1/2.pdf
		NPT 1 1/2"				Solicap-thread-NPT 1 1/2.pdf
1.2	Solicap M FTI55	ASME flange 2" to 4"	**Adapter:** 316L (A-479) **flange** Dual rated material 316/316L	PPS -50 to +180 PE -50 to +80	20(1) 20(2)	**Adapter/flange** Solicap-flange-size-class150.pdf
2.1	Solicap M FTI55	R 1 1/2"	**thread** 316L (A-479) **tube** A-312 TP316L wld & smls pipe	PPS -50 to +180 PE -50 to +80	20(1)	**thread:** Solicap-thread-R 1 1/2.pdf Solicap-thread-NPT 1 1/2.pdf **tube** Solicap-tube-external-pressure-25bar.pdf
		NPT 1 1/2"				
2.2	Solicap M FTI55	ASME flange 2" to 4"	**Adapter:** 316L (A-479) **flange** Dual rated material 316/316L	PPS -50 to +180 PE -50 to +80	20(1) 20(2)	**Adapter/flange** Solicap-flange-size-class150.pdf
3.1	Solicap M FTI55	R 1 1/2"	**thread** 316L (A-479)	PPS -50 to +180 PE -50 to +80	20(1)	Solicap-thread-R 1 1/2.pdf
		NPT 1 1/2"				Solicap-thread-NPT 1 1/2.pdf
3.2	Solicap M FTI55	ASME flange 2" to 4"	**Adapter:** 316L (A-479) **flange** Dual rated material 316/316L	PPS -50 to +180 PE -50 to +80	20(1) 20(2)	**Adapter/flange** Solicap-flange-size-class150.pdf
4.1	Solicap M FTI56	R 1 1/2"	**thread** 316L (A-479)	PTFE -50 to +180 PA -50 to +120	20(1)	Solicap-thread-R 1 1/2.pdf
		NPT 1 1/2"				Solicap-thread-NPT 1 1/2.pdf
4.2	Solicap M FTI56	ASME flange 2" to 4"	**Adapter:** 316L (A-479) **flange** Dual rated material 316/316L	PTFE -50 to +180 PA -50 to +120 -80 to +200	20(1) 20(2)	**Adapter/flange** Solicap-flange-size-class150.pdf
5.1	Solicap M FTI56	R 1 1/2"	**thread** 316L (A-479)	PTFE -50 to +180 PA -50 to +120 -80 to +200	20(1)	Solicap-thread-R 1 1/2.pdf
		NPT 1 1/2"				Solicap-thread-NPT 1 1/2.pdf
5.2	Solicap M FTI56	ASME flange 2" to 4"	**Adapter:** 316L (A-479) **flange** Dual rated material 316/316L	PTFE -50 to +180 PA -50 to +120 -80 to +200	20(1) 20(2)	**Adapter/flange** Solicap-flange-size-class150.pdf

1) Derating for PE or PA fully insulated version (see instruction manual)
2) Depending on flange size see ASME B16.5-2003, table2-2.2, p.37, "pipe flanges and flange fittings"

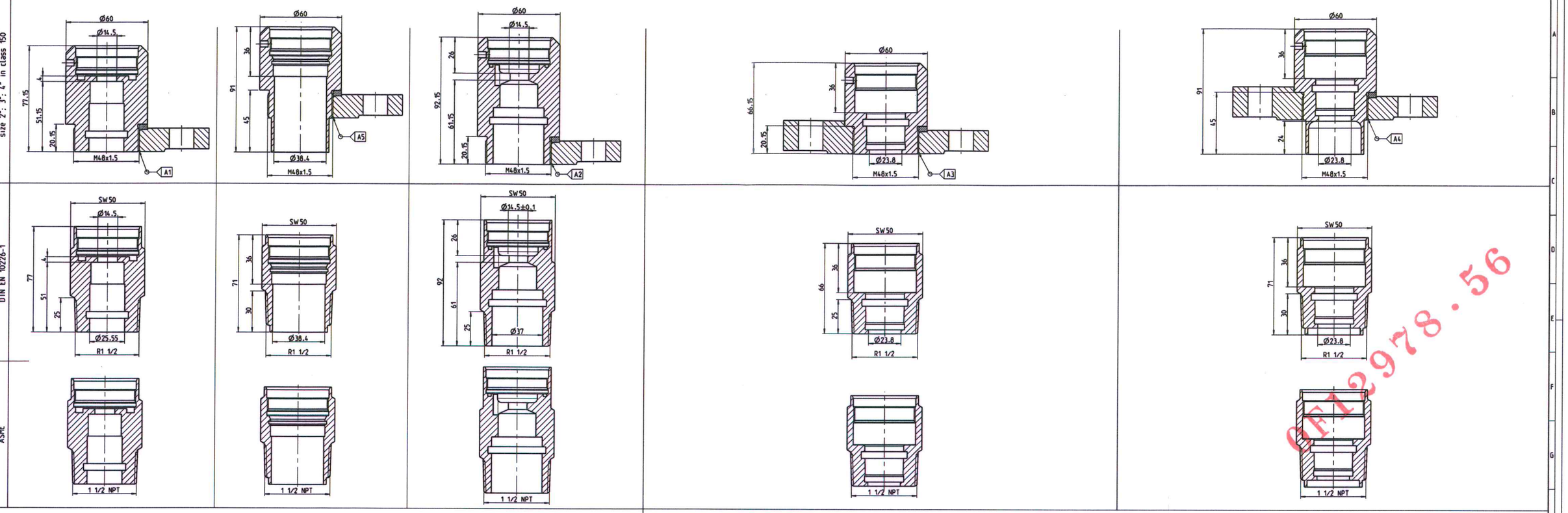

FTI55

FTI56

1.X N Normalsonde/basic probe

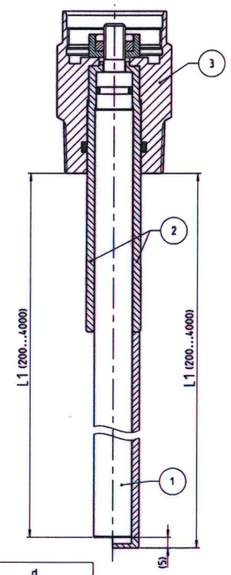

2.X A Sonde mit inaktiver Länge/ probe with inactive length

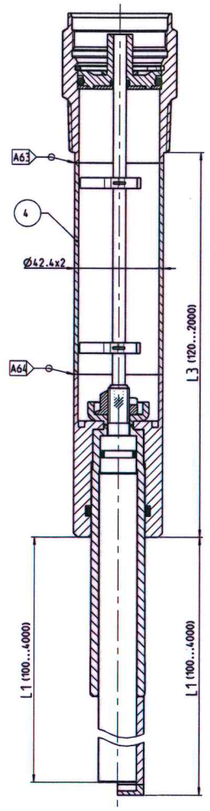

3.X G Sonde mit aktiver Ansatzkompensation (Guard)/ probe with active build-up protection (guard)

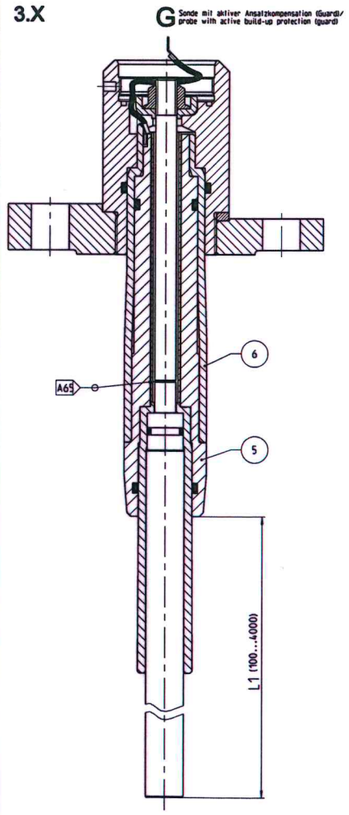

4.X N Normalsonde/basic probe

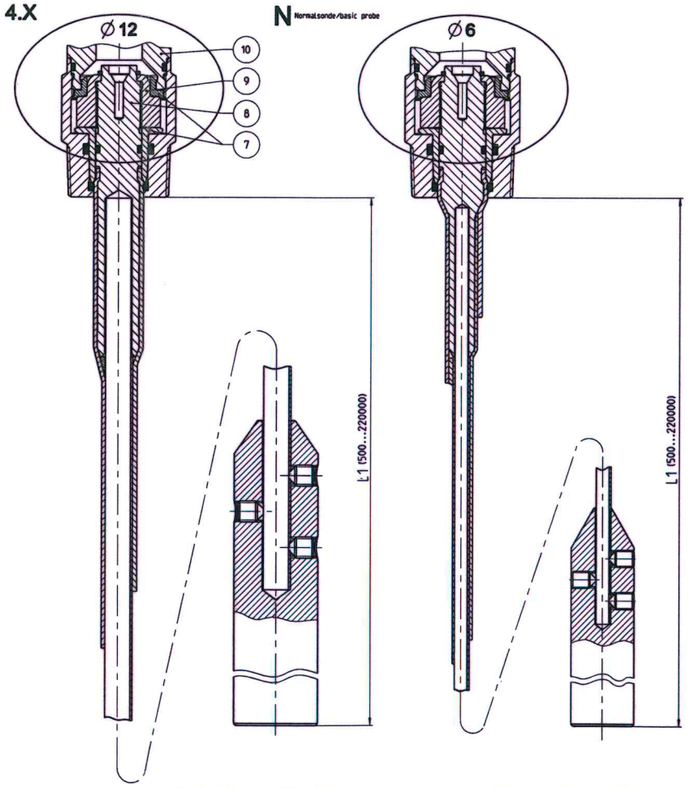

5.X A Sonde mit inaktiver Länge/ probe with inactive length

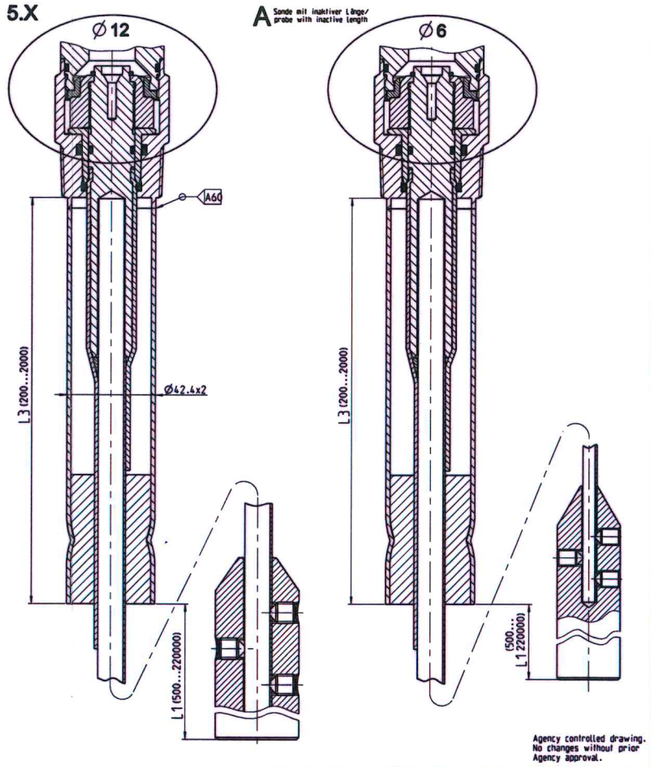

a	b	c	d
Artikel-Nr./ catalogue-no.	Wanddicke/ wall thickness ISO 3183	Grundwerkstoff nach/ base material acc. to DIN EN 10216	Grundwerkstoff/ base material
A1	1,5	Y	1.4404 or 1.4435 or 316L with 1.4404 or 1.4435 or 316/316L
A2	1,5	Y	1.4404 or 1.4435 or 316L with 1.4404 or 1.4435 or 316/316L
A3	1,5	Y	1.4404 or 1.4435 or 316L with 1.4404 or 1.4435 or 316/316L
A4	1,5	Y	1.4404 or 1.4435 or 316L with 1.4404 or 1.4435 or 316/316L
A5	1,5	Y	1.4404 or 1.4435 or 316L with 1.4404 or 1.4435 or 316/316L
A60	2,0	II	1.4404 or 1.4435 or 316L with 1.4404 or 1.4435 or 316/316L
A63	2,0	II	1.4404 or 1.4435 or 316L with 1.4404 or 1.4435 or 316/316L
A64	2,0	II	1.4404 or 1.4435 or 316L with 1.4404 or 1.4435 or 316/316L
A65	2,5	II	1.4404 or 1.4435 or 316L with 1.4404 or 1.4435 or 316/316L

(1) rod: 1.4404 or 1.4435 or 316L
1.0715 or 1213 or Y15
(2) rod insulation: PPS or PE
(3) process adapter: threads 1.0715 or 1213 or Y15
1.4404 or 1.4435 or 316L
flanges 1.4404 or 1.4435 or 316/316L
flange adapter 1.4404 or 1.4435 or 316L

(4) tubes: 1.4404 or 1.4435 or 316L
(5) Guard: 1.4404 or 1.4435 or 316L
(6) insulation: PPS
(7) insulation: PPS
(8) bolt: 1.4404 or 1.4435 or 316L
(9) screw nut: 1.0715 or 1213 or Y15
(10) housing adapter: 1.4404 or 1.4435 or 316L
1.0715 or 1213 or Y15

L1 = Aktive Sondenlänge/aktiv probe length
L2 = Länge der Teilisolation/length of partial insulation
L3 = Abschirmungslänge/screen shield

Agency controlled drawing.
No changes without prior
Agency approval.

Endress+Hauser GmbH+Co. KG
79689 Maulburg / Germany

Schutzvermerk ISO 16016 beachten | Refer to protection notice ISO 16016

Benennung / title: Solicap M FTI55/56
Solicap M FTI55/56

Erstellt DATE/NAME	Bielfeld	22.01.2009	JUBINT
Gepr. DATE/NAME	DIN A0	23.01.2009	STEFFANA
Norm DATE/NAME		23.01.2009	JUBINT
Ersetzt / Ersetzt für		23.08.2007	SCHMISTR
1:1			

Dokument-Nr. / No. of document: 960008564 - -
Blatt / sheet: 1
Material / material: -
SAP-Material-Nr. / SAP-Material-No.:
Norm / standard:
Ersetzt durch / replaced by:

QF12978.56