TI01662F/00/EN/02.23-00
71630443
2023-11-30

Technical Information
Liquiphant FTL62

Vibronic
HART

Point level switch with highly corrosion-resistant coating for liquids

Application

- Point level switch for all liquids, for minimum or maximum detection in tanks, vessels and piping, even in hazardous areas
- Different coatings, plastics or enamel, offer a high degree of corrosion protection for applications in aggressive media
- Process temperature range: −50 to +150 °C (−58 to +302 °F)
- Pressures up to 40 bar (580 psi)
- Viscosities up to 10 000 mPa·s
- Ideal substitute for float switches; reliable function is not affected by flow, turbulence, air bubbles, foam, vibration, solids content or buildup

Advantages

- Approved for safety systems with functional safety requirements up to SIL2/SIL3 in accordance with IEC 61508
- Functional safety: monitoring of the vibration frequency of the tuning fork
- Heartbeat Technology via Fieldcare/DTM and the free iOS/Android SmartBlue app
- With *Bluetooth*® wireless technology

Endress+Hauser
People for Process Automation

Table of contents

About this document

Symbols

Safety symbols

DANGER

This symbol alerts you to a dangerous situation. Failure to avoid this situation will result in serious or fatal injury.

WARNING

This symbol alerts you to a dangerous situation. Failure to avoid this situation can result in serious or fatal injury.

CAUTION

This symbol alerts you to a dangerous situation. Failure to avoid this situation can result in minor or medium injury.

NOTICE

This symbol contains information on procedures and other facts which do not result in personal injury.

Electrical symbols

Ground connection
Grounded clamp, which is grounded via a grounding system.

Protective earth (PE)
Ground terminals, which must be grounded prior to establishing any other connections. The ground terminals are located on the inside and outside of the device.

Symbols for certain types of information

Permitted
Procedures, processes or actions that are permitted.

Forbidden
Procedures, processes or actions that are forbidden.

Tip
Indicates additional information

Reference to documentation

Reference to another section

1., 2., 3. Series of steps

Symbols in graphics

A, B, C ... View

1, 2, 3 ... Item numbers

Hazardous area

Safe area (non-hazardous area)

Communication-specific symbols

Bluetooth
Wireless data transmission between devices over a short distance.

Function and system design

point level detection

Maximum or minimum detection for liquids in tanks or pipes in all industries. Suitable for leakage monitoring, pump dry-running protection or overfill prevention, for example .

Specific versions are suitable for use in hazardous areas.

The point level switch differentiates between the "covered" and "not covered" conditions.

Depending on the MIN (minimum detection) or MAX (maximum detection) modes, there are two possibilities in each case: OK status and demand mode.

OK status
- In MIN mode, the fork is covered, e.g. Pump dry running protection
- In MAX mode, the fork is not covered e.g. overfill prevention

Demand mode
- In MIN mode, the fork is not covered e.g. pump dry running protection
- In MAX mode, the fork is covered e.g. overfill prevention

Measuring principle

The sensor's tuning fork vibrates at its intrinsic frequency. As soon as the liquid covers the tuning fork, the vibration frequency decreases. The change in frequency causes the point level switch to switch.

Measuring system

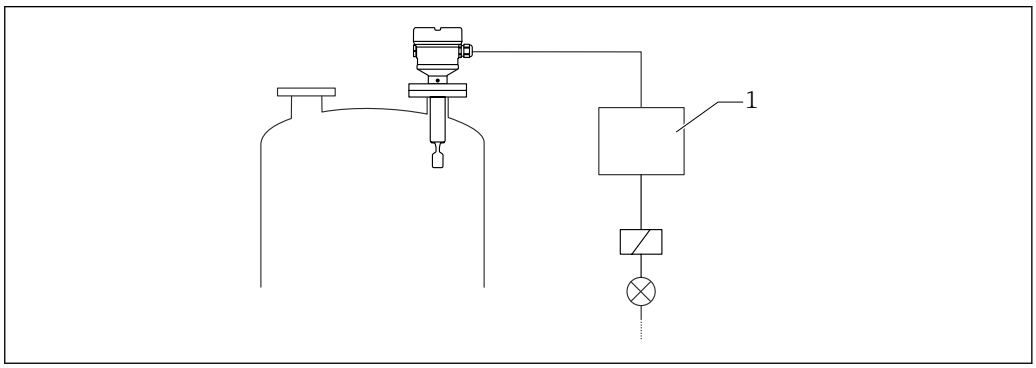

1 Example of a measuring system

1 Switching unit, PLC etc.

Dependability for measuring devices with HART or Bluetooth

IT security

Endress+Hauser can only provide a warranty if the device is installed and used as described in the Operating Instructions. The device is equipped with security mechanisms to protect it against any inadvertent changes to the device settings. IT security measures in line with operators' security standards and designed to provide additional protection for the device and device data transfer must be implemented by the operators themselves.

Device-specific IT security

The device offers specific functions to support protective measures by the operator. These functions can be configured by the user and guarantee greater in-operation safety if used correctly. An overview of the most important functions is provided in the following section:

- Write protection via hardware write protection switch
- Access code (applies for operation via display, Bluetooth, FieldCare, DeviceCare, AMS, PDM ...)

Input

Measured variable

Level (point level), MAX or MIN safety

Measuring range

Depends on the installation location and the pipe extension ordered

Sensor length:
- With plastic coating, maximum 3 m (9.8 ft)
- With enamel coating, maximum 1.2 m (3.9 ft)

Output

Output signal

SIO (FEL60H electronic insert)

8/16 mA (SIO) with superimposed digital communication protocol HART, 2-wire

Continuous operation (FEL60H electronic insert)

4 to 20 mA proportional to the oscillation frequency with superimposed digital communication protocol HART, 2-wire

For continuous current output, one of the following modes of operation can be selected:
- 4.0 to 20.5 mA
- NAMUR NE 43: 3.8 to 20.5 mA (factory setting)
- US mode: 3.9 to 20.8 mA

Signal on alarm

Signal on alarm in accordance with NAMUR recommendation NE 43.

4 to 20 mA HART:
- Max. alarm: can be set from 21.5 to 23 mA
- Min. alarm: < 3.6 mA (factory setting)

Load

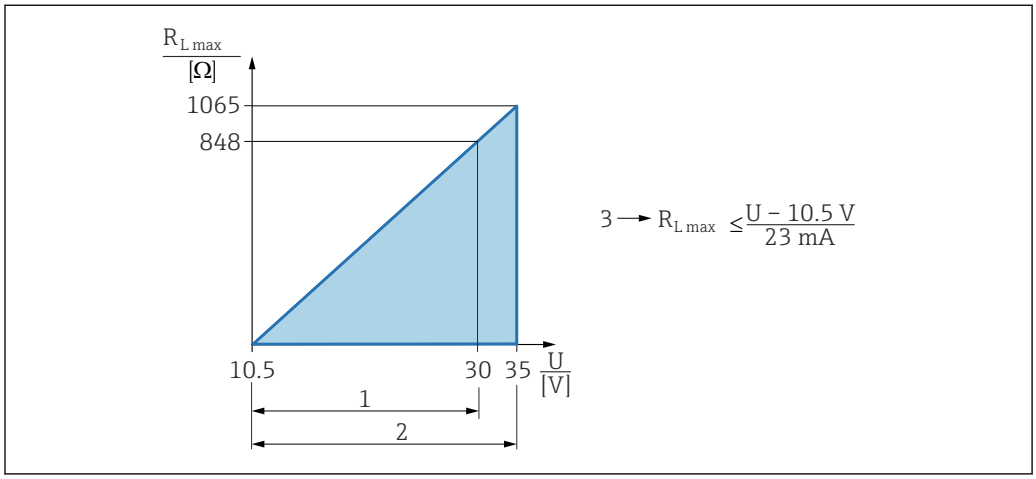

2 Load 4 to 20 mA HART

1 Power supply 10.5 to 30 V_{DC} Ex i
2 Power supply 10.5 to 35 V_{DC}, for other types of protection and for non-certified device versions
3 R_{Lmax} maximum load resistance
U Supply voltage

Operation via handheld terminal or PC with operating program: take minimum communication resistance of 250 Ω into consideration.

Damping

Damping affects all the outputs (output signal, display) and is only available in the continuous 4 to 20 mA mode.

Damping has no effect on the SIO.

Activating damping:
Via local display, Bluetooth, handheld terminal or PC with operating program, continuous from 0 to 999 s
Factory setting: 1 s

Switch output

Preset switching delay times can be ordered:
- 0.5 s when the tuning fork is covered and 1.0 s when the tuning fork is uncovered (factory setting)
- 0.25 s when the tuning fork is covered and 0.25 s when the tuning fork is uncovered
- 1.5 s when the tuning fork is covered and 1.5 s when the tuning fork is uncovered
- 5.0 s when the tuning fork is covered and 5.0 s when the tuning fork is uncovered

The user can also set the switching delays for when the fork is covered and uncovered in the range from 1 to 60 seconds independently of one another.

(Operation via display, Bluetooth or FieldCare, DeviceCare, AMS, PDM)

Ex connection data

See safety instructions (XA): All data relating to explosion protection are provided in separate Ex documentation and are available from the Downloads area of the Endress+Hauser website. The Ex documentation is supplied as standard with all devices approved for use in explosion hazardous areas.

Protocol-specific data

HART

- Manufacturer ID: 17 (0x11)
- Device type code: 0x11C4
- Device revision: 1
- HART specification: 7
- DD revision: 1
- Device description files (DTM, DD) information and files at:
  - www.endress.com
  - www.fieldcommgroup.org
- HART load: min. 250 Ω

HART device variables (preset at the factory)

The following measured values are assigned to the device variables at the factory:

Device variable	Measured value
Primary variable (PV) parameter (Primary variable) [1]	Point level detection [2]
Secondary variable (SV) parameter (Secondary variable)	Sensor frequency [3]
Tertiary variable (TV) parameter (Third variable)	Fork state [4]
Quaternary variable (QV) parameter (Quaternary variable)	Sensor temperature

1) The PV is always applied to the current output.
2) Point level detection is the initial state depending on the fork state (uncovered/covered) and the safety function (MIN/MAX)
3) Sensor frequency is the oscillation frequency of the fork
4) Fork state is the fork state (**Fork covered** option/**Fork uncovered** option)

Choice of HART device variables

- Level limit detection
- Sensor frequency
- Fork state
- Sensor temperature
- Terminal current
  The terminal current is the read-back current on terminal block. Visibility depends on order options or device settings
- Terminal voltage
  Visibility depends on order options or device settings

Supported functions

- Burst mode
- Additional transmitter status
- Device locking

Wireless HART data

- Minimum start-up voltage: 10.5 V
- Start-up current: > 3.6 mA
- Start-up time: < 8 s
- Minimum operating voltage: 10.5 V
- Multidrop current: 4 mA

Heartbeat Technology

Heartbeat Technology module

The software package consists of 3 modules. These three modules combined check, evaluate and monitor device functionality and process conditions.

- Heartbeat Diagnostics
- Heartbeat Verification
- Heartbeat Monitoring

Power supply

Terminal assignment

Single compartment housing

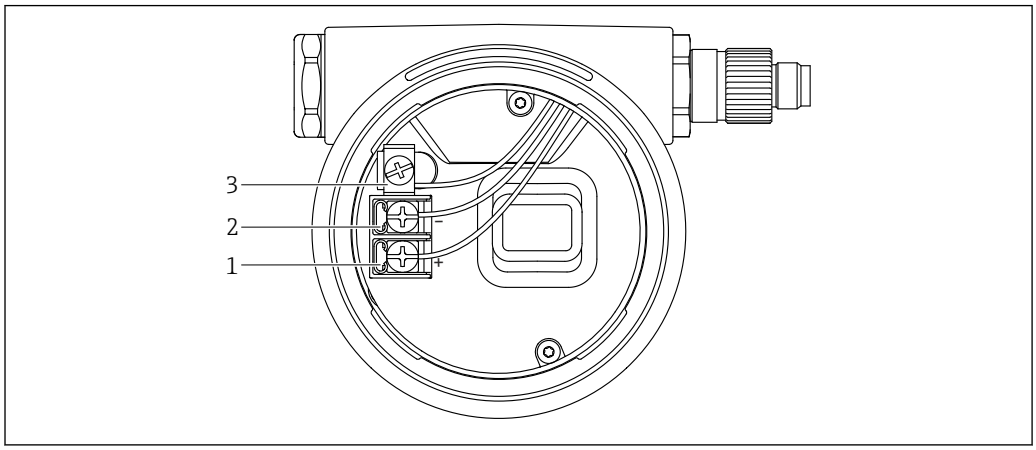

3 Connection terminals and ground terminal in the connection compartment

1 Positive terminal
2 Negative terminal
3 Internal ground terminal

Dual compartment housing, L-form

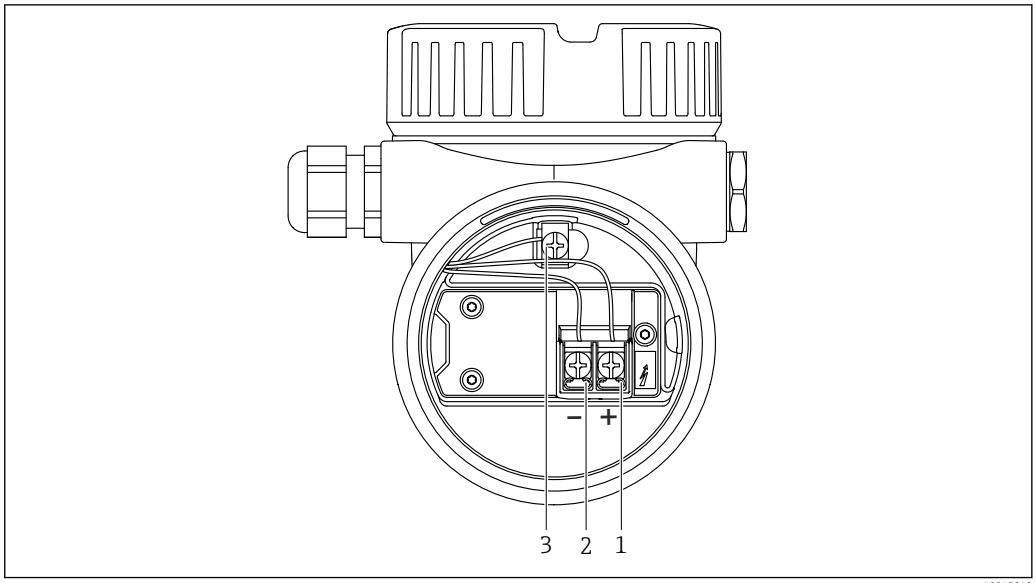

A0045842

4 *Connection terminals and ground terminal in the connection compartment*

1 *Positive terminal*
2 *Negative terminal*
3 *Internal ground terminal*

Available device plugs

In the case of devices with a plug, it is not necessary to open the housing for connection purposes.

M12 plug

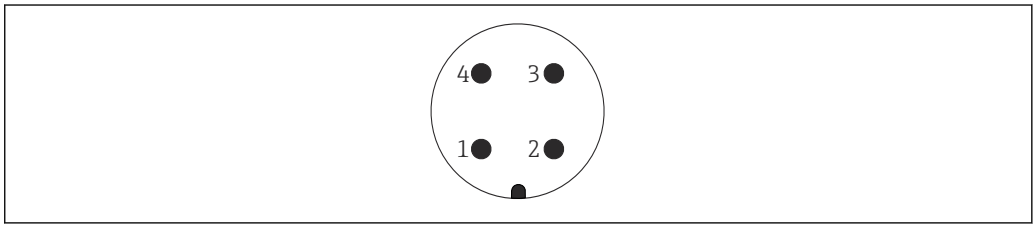

A0011175

5 *M12 plug, pin assignment*

1 *Signal +*
2 *Not assigned*
3 *Signal –*
4 *Ground*

For more details, see the "Accessories" section.

Supply voltage

- U = 10.5 to 35 V_{DC} (Ex d, Ex e, non-Ex)
- U = 10.5 to 30 V_{DC} (Ex i)
- Rated current: 4 to 20 mA HART

- The power unit must be tested to ensure it meets safety requirements (e.g. PELV, SELV, Class 2) and must comply with the relevant protocol specifications.
- Comply with the following according to IEC/EN61010-1: provide a suitable circuit breaker for the device.

Potential equalization

WARNING

Explosion Hazard!

▶ Please refer to the separate documentation on applications in hazardous areas for the safety instructions.

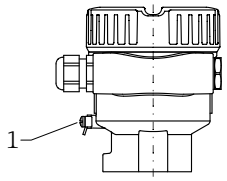

A0045830

1 Ground terminal for connecting the potential matching line

If necessary, the potential matching line can be connected to the external ground terminal of the transmitter before the device is connected.

For optimum electromagnetic compatibility:
- Potential matching line as short as possible
- Observe a cross-section of at least 2.5 mm^2 (14 AWG)

Terminals

- Supply voltage and internal ground terminal: 0.5 to 2.5 mm^2 (20 to 14 AWG)
- External ground terminal: 0.5 to 4 mm^2 (20 to 12 AWG)

Cable entries

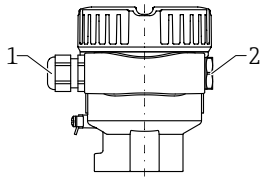

A0045831

1 Cable entry
2 Dummy plug

The type of cable entry depends on the device version ordered.

Cable specification

- The cable outer diameter depends on the cable entry used
- Cable outer diameter
  - Plastic: Ø5 to 10 mm (0.2 to 0.38 in)
  - Nickel-plated brass: Ø7 to 10.5 mm (0.28 to 0.41 in)
  - Stainless steel: Ø7 to 12 mm (0.28 to 0.47 in)

Overvoltage protection

Devices without optional overvoltage protection

Equipment from Endress+Hauser fulfills the requirements of the product standard IEC/DIN EN 61326-1 (Table 2 Industrial Environment).

Depending on the type of port (DC supply, input/output port) different test levels according to IEC/DIN EN 61326-1 against transient overvoltages (Surge) are applied (IEC/DIN EN 61000-4-5): Test level on DC power ports and input/output ports is 1 000 V line to earth

Devices with optional overvoltage protection

- Spark-over voltage: min. 400 V_{DC}
- Tested: According to IEC/DIN EN 60079-14 sub chapter 12.3 (IEC/DIN EN 60060-1 chapter 7)
- Nominal discharge current: 10 kA

Overvoltage category

Overvoltage category II

Pollution degree

Pollution degree 2

Performance characteristics

Reference operating conditions

- Ambient temperature: +23 °C (+73 °F)
- Process temperature: +23 °C (+73 °F) ±5 °C (9 °F)
- Density (water): 1 g/cm³ (62.4 lb/ft³)
- Medium viscosity: 1 mPa·s
- Process pressure: unpressurized
- Sensor installation: vertically from above
- Density selection switch: > 0.7 g/cm³ (43.7 lb/ft³) (SGU)
- Switch direction of sensor: uncovered to covered

Take switch point into consideration

The following are typical switch points, depending on the orientation of the point level switch and coating.

Water +23 °C (+73 °F)

Minimum distance between the tuning fork and the tank wall or pipe wall: 10 mm (0.39 in)

Plastic-coated tuning fork (ECTFE, PFA)

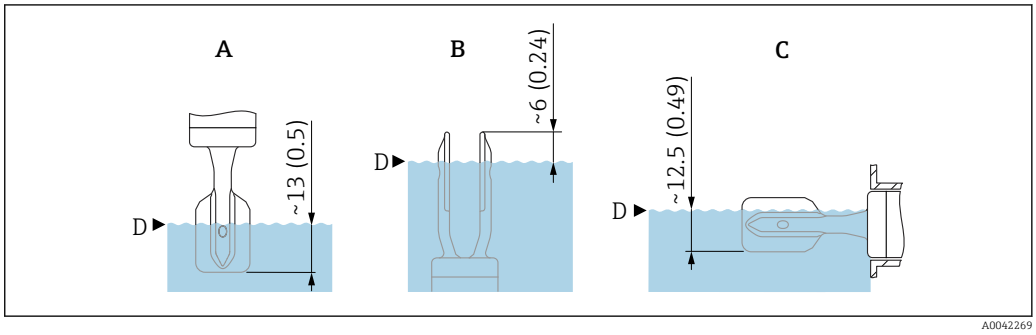

6 *Typical switch points, plastic-coated tuning fork (ECTFE, PFA). Unit of measurement mm (in)*

A Installation from above
B Installation from below
C Installation from the side
D Switch point

Enamel-coated tuning fork

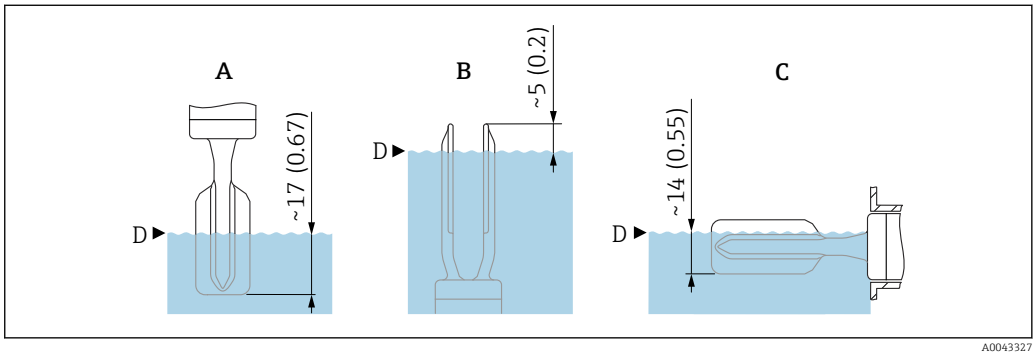

7 *Typical switch points, enamel-coated tuning fork. Unit of measurement mm (in)*

A Installation from above
B Installation from below
C Installation from the side
D Switch point

Maximum measured error

At reference operating conditions:
- Plastic coating: −0.2 to −1.2 mm (−0.008 to −0.05 in)
- Enamel coating: 0 to 0.9 mm (0 to 0.04 in)

Resolution

Current output: < 1 µA

Dead time, time constant, settling time

Presentation of the dead time, time constant and settling time as per DIN EN 61298-2

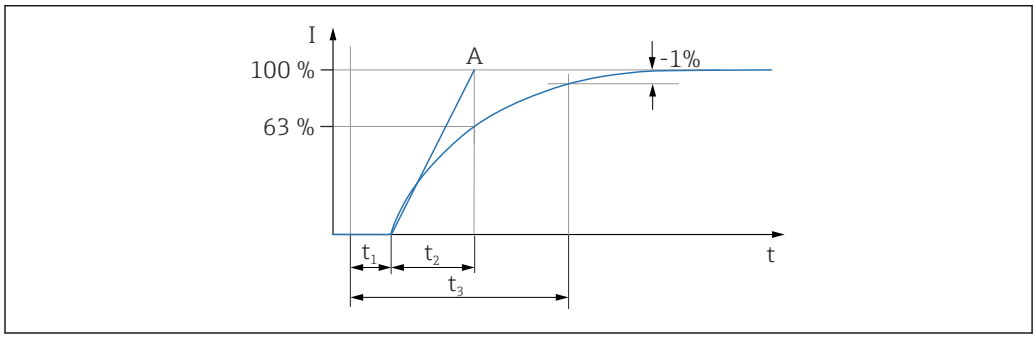

t_1 Dead time
t_2 Time constant
t_3 Settling time
A Stable full scale value

Dynamic behavior, current output

- Dead time (t_1): 100 ms
- Time constant T63 (t_2): can be set from 0 to 999 s
- Settling time (t_3): minimum 250 ms

Dynamic behavior, digital output

- Dead time (t_1):
  - Minimum: 200 ms
  - Maximum: 800 ms
- Time constant T63 (t_2): can be set from 0 to 999 s
- Settling time (t_3): minimum 200 ms

Reading cycle

- Acyclic: maximum 3/s, typically 1/s (depending on command # and number of preambles)
- Cyclic (burst): maximum 3/s, typically 2/s

The device offers the BURST MODE function for cyclic value transmission via the HART communication protocol.

Cycle time (update time)

Cyclic (burst): at least 300 ms

Hysteresis

At reference operating conditions:
- Plastic coating: 2.5 mm (0.1 in)
- Enamel coating: 3.5 mm (0.14 in)

Non-repeatability

0.5 mm (0.02 in)

Influence of the process temperature

Temperature range and switch point shift
- ECTFE: maximum −50 to +120 °C (−58 to +248 °F)
  Switch point shift in the range of 1 to 3.0 mm (0.04 to 0.12 in)
- PFA: maximum −50 to +150 °C (−58 to +302 °F)
  Switch point shift in the range of 1 to 3.0 mm (0.04 to 0.12 in)
- Enamel: maximum −50 to +150 °C (−58 to +302 °F)
  Switch point shift in the range of 1.05 to 2.0 mm (0.04 to 0.08 in)

Influence of the process pressure

Pressure range and switch point shift
- ECTFE, PFA: maximum 0 to 40 bar (0 to 580 psi)
  Switch point shift in the range of 0 to −2.0 mm (0 to −0.08 in)
- Enamel: maximum 0 to 25 bar (0 to 363 psi)
  Switch point shift in the range of 0 to −1.0 mm (0 to −0.04 in)

Influence of the density of the process medium (at room temperature and normal pressure)

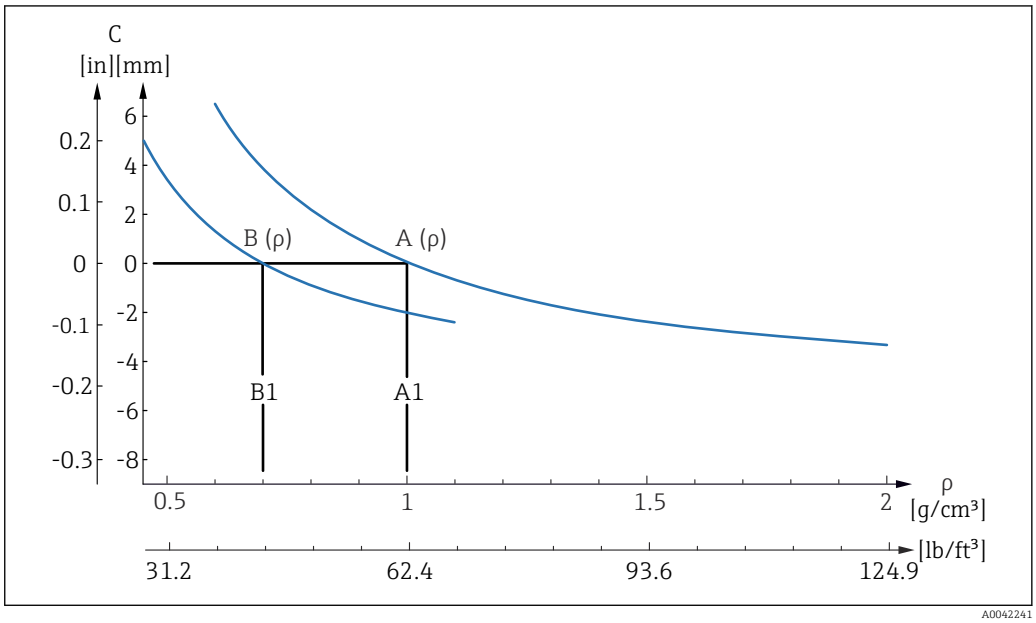

8 *Reference switch points via density, plastic coating (ECTFE, PFA)*

A *Set density (ρ) > 0.7*
A1 *Reference condition ρ = 1.0 kg/m³*
B *Set density (ρ) > 0.5*
B1 *Reference condition ρ = 0.7 kg/m³*
C *Switch point deviation*

Density setting
- TC_{typ}, [mm/10 k]
  - $\rho > 0.7$: −0.25
  - $\rho > 0.5$: −0.3
- $Pressure_{typ}$, [mm/10 bar]
  - $\rho > 0.7$: −0.3
  - $\rho > 0.5$: −0.4

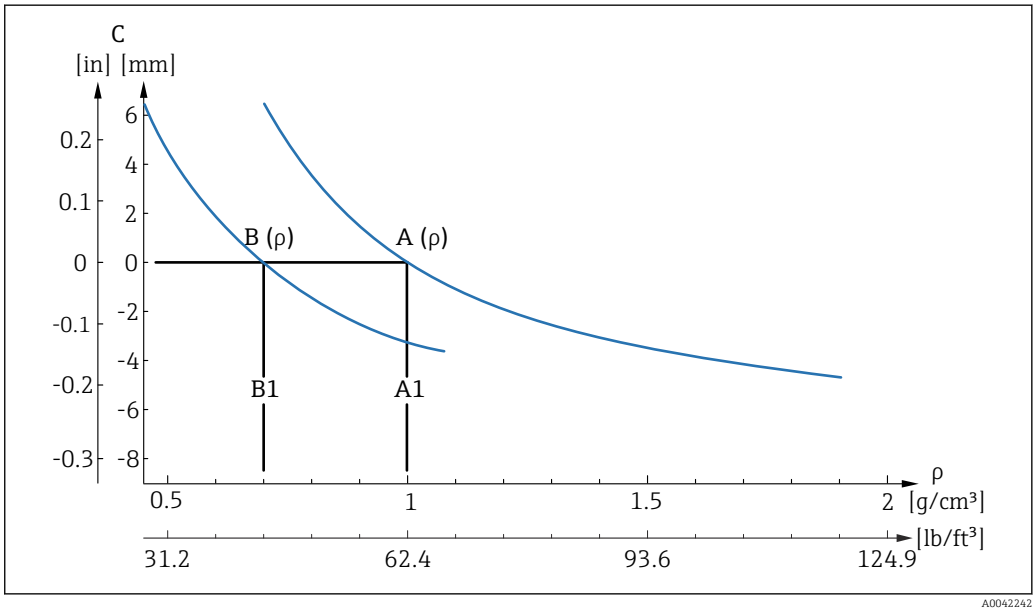

9 *Reference switch points via density, enamel coating*

A *Set density (ρ) > 0.7*
A1 *Reference condition ρ = 1.0 kg/cm³*
B *Set density (ρ) > 0.5*
B1 *Reference condition ρ = 0.7 kg/cm³*
C *Switch point deviation*

Density setting
- TC_{typ}, [mm/10 k]
  - $\rho > 0.7$: −0.1
  - $\rho > 0.5$: −0.15
- $Pressure_{typ}$, [mm/10 bar]
  - $\rho > 0.7$: −0.3
  - $\rho > 0.5$: −0.4

Mounting

Mounting location, orientation

Mounting instructions
- Any orientation for device with a pipe length of up to 500 mm (19.7 in)approx.
- Vertical orientation from above for device with long pipe
- Minimum distance between the tuning fork and the tank wall or pipe wall: 10 mm (0.39 in)

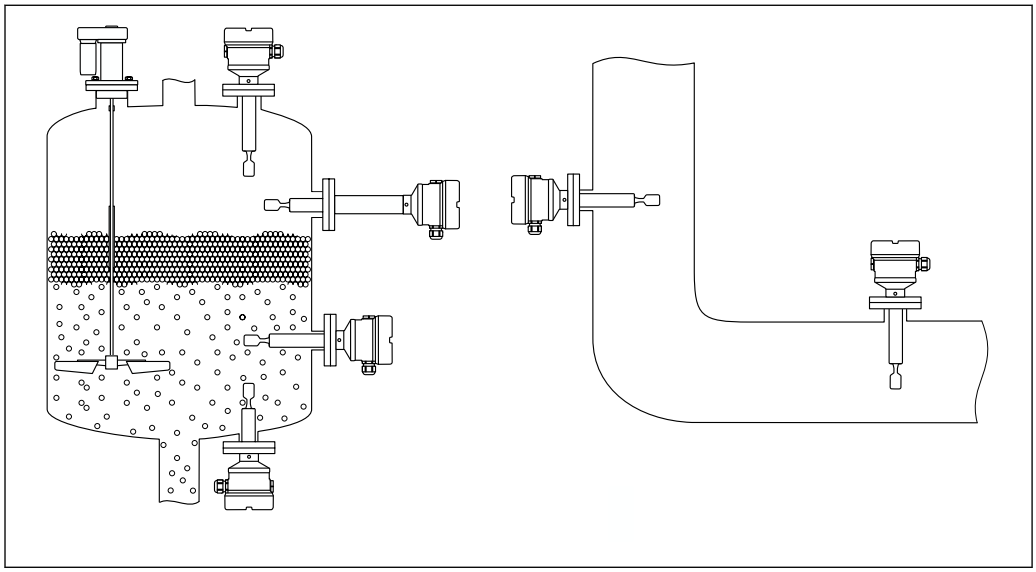

A0042153

10 *Installation examples for a vessel, tank or pipe*

Installation instructions

Take viscosity into consideration

Viscosity values
- Low viscosity : < 2 000 mPa·s
- High viscosity: > 2 000 to 10 000 mPa·s

Low viscosity

Low viscosity, e.g. water: < 2 000 mPa·s

It is permitted to position the tuning fork within the installation socket.

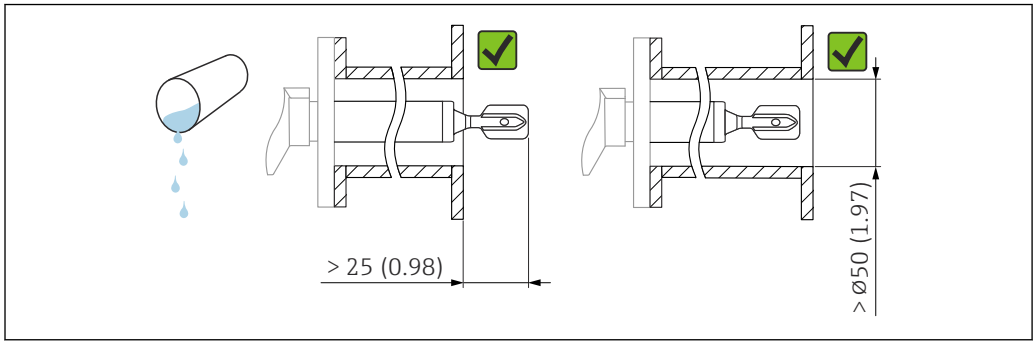

A0042204

11 *Installation example for low-viscosity liquids. Unit of measurement mm (in)*

High viscosity

NOTICE

Highly viscous liquids may cause switching delays.

- Make sure that the liquid can run off the tuning fork easily.
- Deburr the socket surface.

High viscosity, e.g. viscous oils: ≤ 10 000 mPa·s

The tuning fork must be located outside the installation socket!

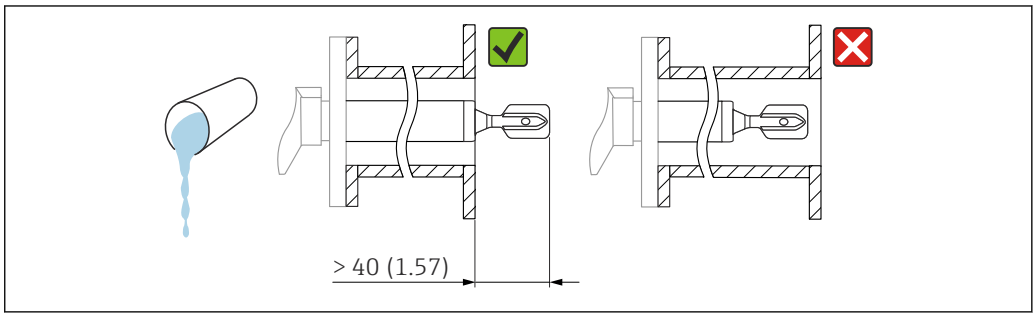

12 *Installation example for a highly viscous liquid. Unit of measurement mm (in)*

Avoid buildup

- Use short installation sockets to ensure that the tuning fork projects freely into the vessel
- Leave sufficient distance between the buildup expected on the tank wall and the tuning fork

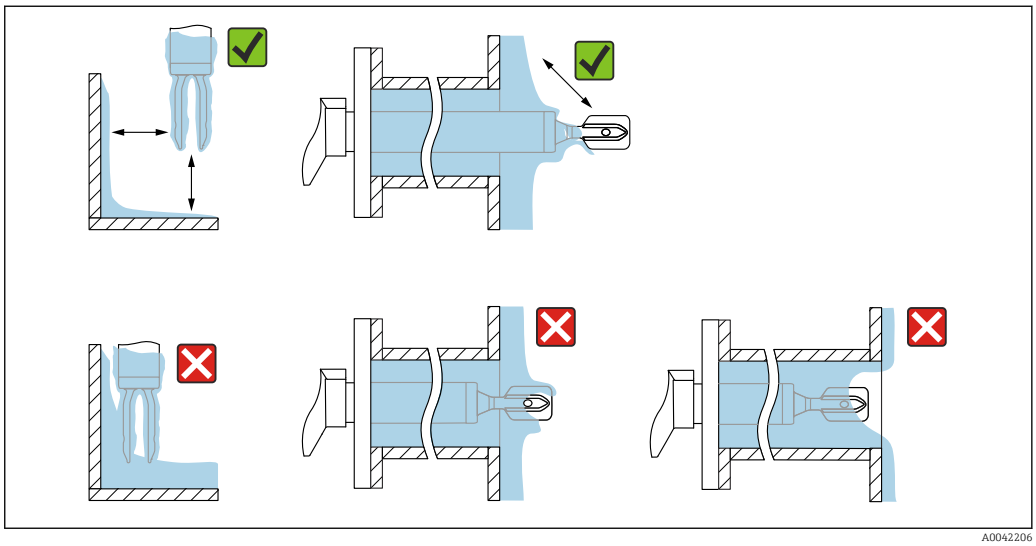

13 *Installation examples for a highly viscous process medium*

Take clearance into consideration

Allow sufficient space outside the tank for mounting, connection and settings involving the electronic insert.

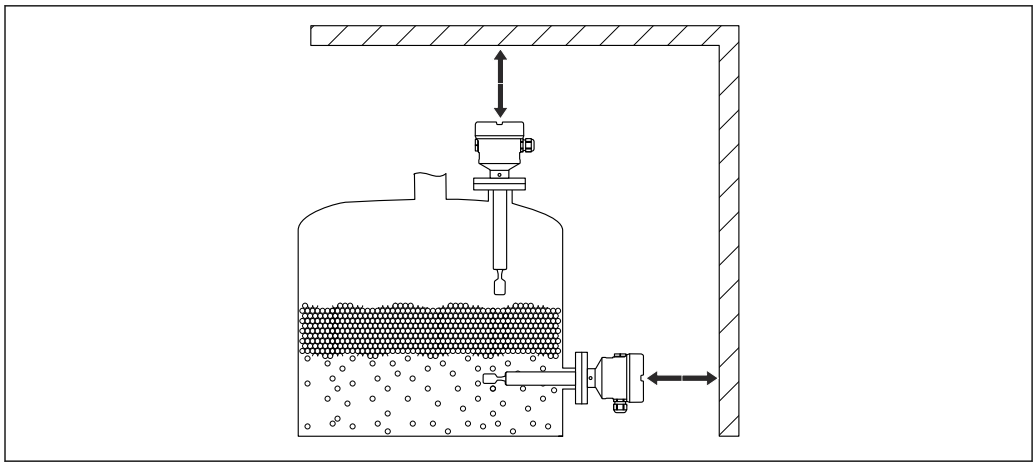

A0033236

14 *Take clearance into consideration*

Aligning the tuning fork using the marking

The tuning fork can be aligned using the marking in such a way that the medium drains off easily and buildup is avoided.

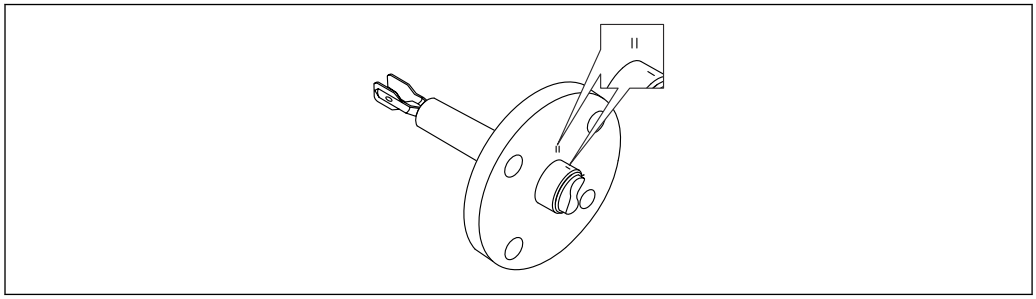

A0042207

15 *Position of the tuning fork when installed horizontally in the vessel using the marking*

Installing the device in piping

- Flow velocity up to 5 m/s with a viscosity of 1 mPa·s and density of 1 g/cm³ (62.4 lb/ft³) (SGU). Check for correct functioning in the event of other process medium conditions.
- The flow will not be significantly impeded if the tuning fork is correctly aligned and the marking is pointing in the direction of flow.
- The marking is visible when installed.

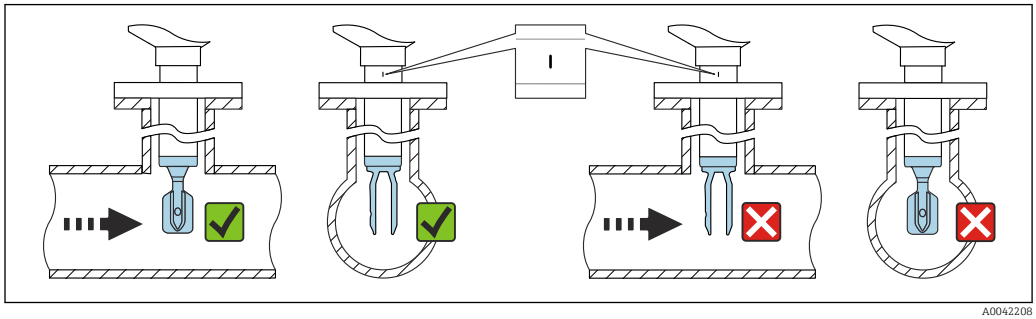

A0042208

16 *Installation in pipes (take fork position and marking into consideration)*

Aligning the cable entry

Housings with locking screw:
- The housing can be turned and the cable aligned by turning the locking screw.
- The locking screw is not tightened when the device is delivered.

Housing with locking screw: The housing can be turned and the cable aligned by turning the locking screw.

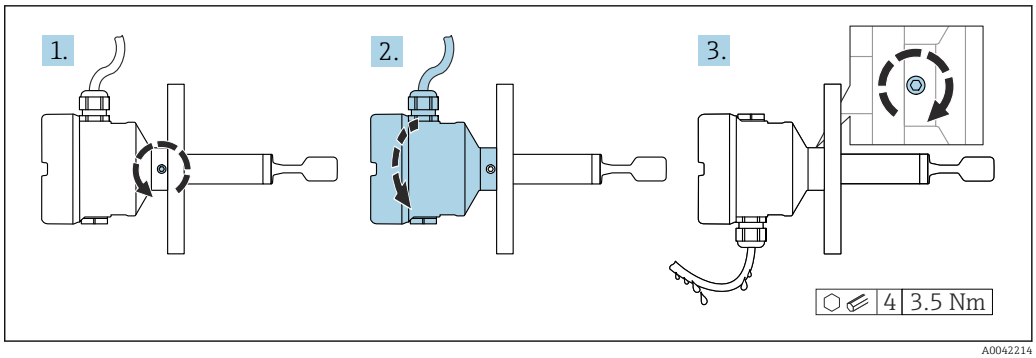

17 *Housing with external locking screw and drip loop*

Special mounting instructions

Vessel with heat insulation

If process temperatures are high, the device should be incorporated in the usual vessel insulation system to prevent the electronics from heating as a result of thermal radiation or convection. The insulation in this case should not be higher than the neck of the device.

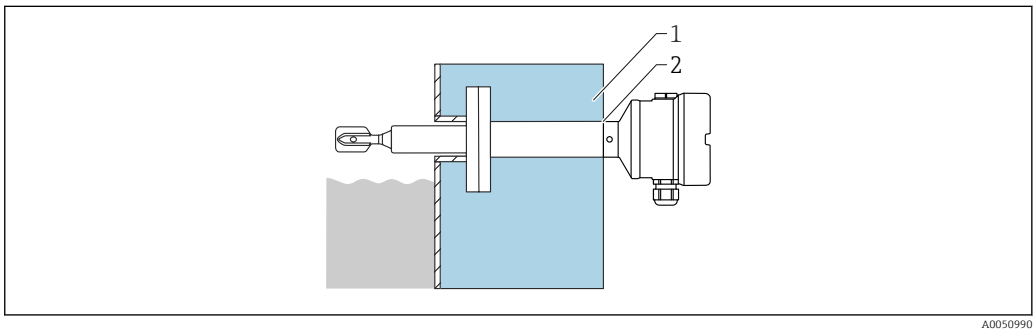

18 *Vessel with heat insulation (example with temperature spacer)*

1 *Vessel insulation*
2 *Insulation up to the housing neck max.*

Support the device

NOTICE

If the device is supported incorrectly, shocks and vibrations can damage the coated surface.

- Only use a support in conjunction with ECTFE or PFA plastic coating.
- Use suitable supports only.

Support the device in the event of severe dynamic load. Maximum lateral loading capacity of the pipe extensions and sensors: 75 Nm (55 lbf ft).

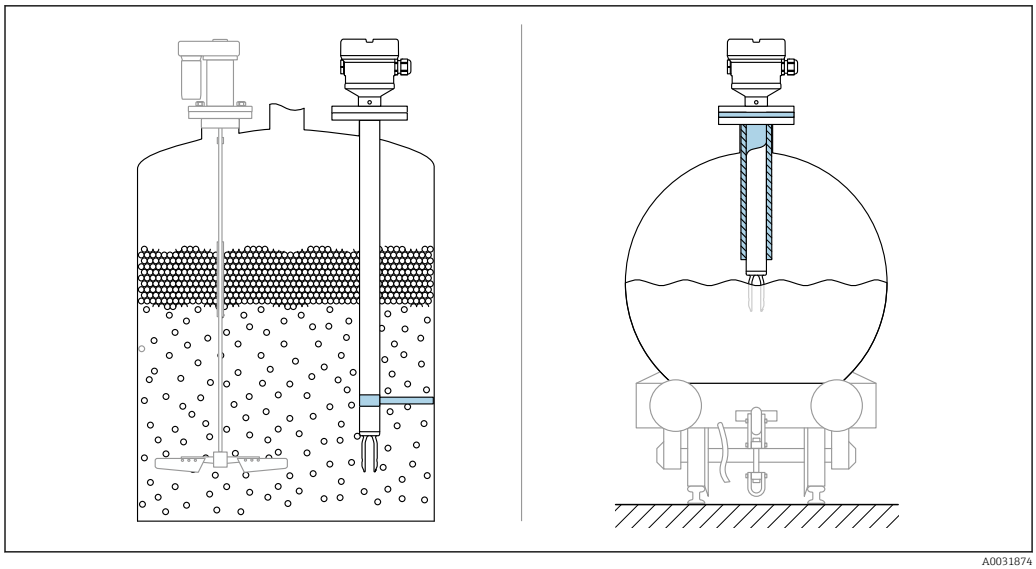

19 *Examples of support in the event of dynamic load*

Marine approval: In the case of pipe extensions or sensors longer than 1 600 mm (63 in), a support is needed at least every 1 600 mm (63 in).

Environment

Ambient temperature range

The following values apply up to a process temperature of +90 °C (+194). At higher process temperatures, the permitted ambient temperature is reduced (see diagram).

- Without LCD display: −40 to +70 °C (−40 to +158)
- With LCD display: −40 to +70 °C (−40 to +158) with limitations in optical properties, such as display speed and contrast
  Can be used without limitations: −20 to +60 °C (−4 to +140 °F)

Optionally available:

- −50 °C (−58 °F) with restricted operating life and performance
- −60 °C (−76 °F) with restricted operating life and performance,
  Below −50 °C (−58 °F): devices can be permanently damaged

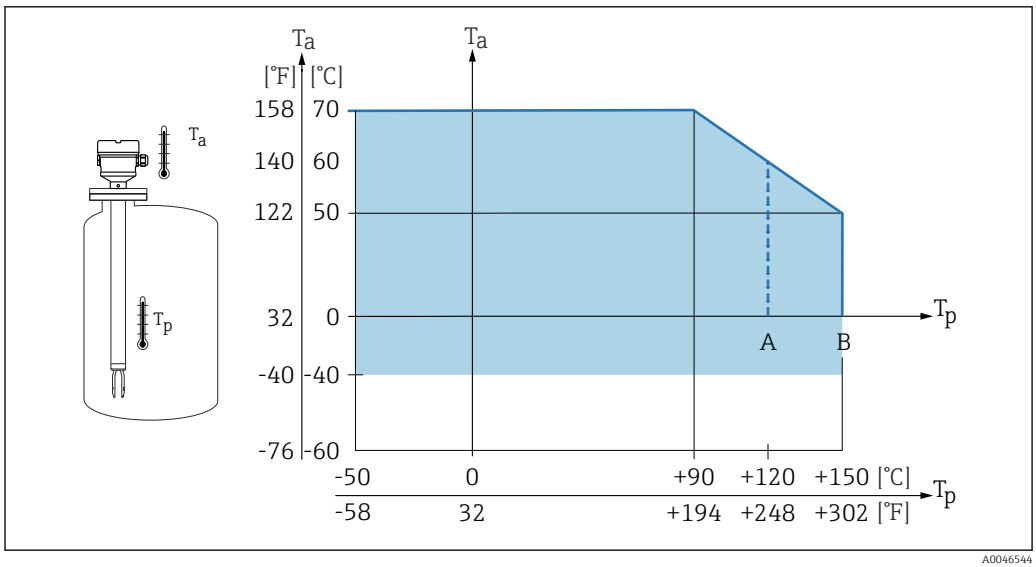

20 *Permitted ambient temperature T_a at the housing as a function of the process temperature T_p in the vessel*

A ECTFE-coated
B PFA- or enamel-coated

The following ambient temperature applies over the entire process temperature range for devices with a temperature spacer: +70 °C (+158 °F)

Outdoor operation in strong sunlight:
- Mount the device in a shaded location
- Avoid direct sunlight, particularly in warmer climatic regions
- Use a weather protection cover, can be ordered as an accessory

Hazardous area

In the hazardous area, the permitted ambient temperature can be limited depending on the zones and gas groups. Pay attention to the information in the Ex documentation (XA).

Storage temperature

−40 to +80 °C (−40 to +176 °F)
Optional −50 °C (−58 °F) or −60 °C (−76 °F)

Humidity

Operation up to 100 %. Do not open in a condensing atmosphere.

Operating height

Up to 5 000 m (16 404 ft) above sea level.

Climate class

As per IEC 60068-2-38 test Z/AD

Degree of protection

Test as per IEC 60529 and NEMA 250

IP68 test condition: 1.83 m H_2O for 24 h

Housing
See cable entries

Cable entries
- M20 threaded joint, plastic, IP66/68 NEMA Type 4X/6P
- M20 threaded joint, nickel-plated brass, IP66/68 NEMA Type 4X/6P
- M20 threaded joint, 316L, IP66/68 NEMA Type 4X/6P
- M20 thread, IP66/68 NEMA Type 4X/6P
- Thread G ½, NPT ½, IP66/68 NEMA Type 4XXX

Degree of protection for M12 plug
- When housing is closed and connecting cable is plugged in: IP66/67 NEMA Type 4X
- When housing is open or connecting cable is not plugged in: IP20, NEMA Type 1

NOTICE

M12 plug: Loss of IP protection class due to incorrect installation!
- ▶ The degree of protection only applies if the connecting cable used is plugged in and screwed tight.
- ▶ The degree of protection only applies if the connecting cable used is specified according to IP67 NEMA Type 4X.

If the "M12 plug" option is selected as the electrical connection, **IP66/67 NEMA Type 4X** applies for all housing types.

Vibration resistance

As per IEC60068-2-64-2008
a(RMS) = 50 m/s², f = 5 to 2 000 Hz, t = 3 axes x 2 h

Shock resistance

In accordance with IEC60068-2-27-2008: 300 m/s² [= 30 g_n] + 18 ms

g_n: standard acceleration of gravity

Mechanical load

Support the device in the event of severe dynamic load. Maximum lateral loading capacity of the pipe extensions and sensors: 75 Nm (55 lbf ft).

For more details, see the "Supporting the device" section.

Pollution degree

Pollution level 2

Electromagnetic compatibility (EMC)

- Electromagnetic compatibility as per EN 61326 series and NAMUR recommendation EMC (NE21)
- With regard to the safety function (SIL), the requirements of EN 61326-3-x are satisfied
- Maximum deviation under disturbance: < 0.5% of span

For more details, refer to the EU Declaration of Conformity.

Process

Process temperature range

- ECTFE: −50 to +120 °C (−58 to +248 °F)
- PFA: −50 to +150 °C (−58 to +302 °F)
- Enamel:−50 to +150 °C (−58 to +302 °F)

Pay attention to the pressure and temperature dependency. "Process pressure range" section.

Thermal shock

≤ 120 K/s

Process pressure range

WARNING

The maximum pressure for the device depends on the lowest-rated element, with regard to pressure, of the selected component. This means that it is necessary to pay attention to the process connection as well as the sensor.

- ▶ Pressure specifications, Technical Information, "Mechanical construction" section.
- ▶ Only operate the device within the specified limits!
- ▶ The Pressure Equipment Directive (2014/68/EU) uses the abbreviation "PS". The abbreviation "PS" corresponds to the MWP (maximum working pressure) of the device.

Refer to the following standards for the permitted pressure values of the flanges at higher temperatures:

- pR EN 1092-1: With regard to its stability-temperature property, the material 1.4435 is identical to 1.4404, which is classed as 13E0 in EN 1092-1 Tab. 18. The chemical composition of the two materials can be identical.
- ASME B 16.5
- JIS B 2220

The following data apply over the entire temperature range. Pay attention to exceptions for flange process connections!

- ECTFE, PFA: −1 to 40 bar (−14.5 to 580 psi)
- Enamel: max. −1 to 25 bar (−14.5 to 363 psi)

In each case, the lowest value from the derating curves of the device and the selected flange applies.

Canadian CRN approval: more details about the maximum pressure values are available in the download area of the product page under: www.endress.com→ Downloads.

Overpressure limit

- Overpressure limit = 1.5 · PN
  - ECTFE, PFA: PN = 40 bar (580 psi)
  - Enamel: PN = 25 bar (362.5 psi)
- Membrane burst pressure at 200 bar (2 900 psi)

The device function is limited during the pressure test.

Mechanical integrity is guaranteed up to 1.5 times the process nominal pressure PN.

Medium density

Liquids with density > 0.7 g/cm³ (43.7 lb/ft³)
Setting > 0.7 g/cm³ (43.7 lb/ft³), as supplied to the customer

Liquids with density 0.5 g/cm³ (31.2 lb/ft³)
Setting > 0.5 g/cm³ (31.2 lb/ft³), can be ordered as preset value or configurable

Liquids with density > 0.4 g/cm³ (25.0 lb/ft³)

- Setting > 0.4 g/cm³ (25.0 lb/ft³), can be ordered as preset value or configurable
- SIL for defined media and process parameters on request

For information on medium differentiation/density detection: Documentation Liquiphant density (FEL60D) with density computer FML621 (Endress+Hauser website www.endress.com → Downloads)

Viscosity

≤ 10 000 mPa·s

Pressure tightness

Up to vacuum

In vacuum evaporation plants, select the 0.4 g/cm³ (25.0 lb/ft³)/ density setting.

Solids contents

Ø ≤ 5 mm (0.2 in)

Mechanical construction

Design, dimensions

Device height

The device height consists of the following components:
- Housing including cover
- Temperature spacer and/or pressure-tight feedthrough (second line of defense), optional
- Pipe extension or short pipe version, optional
- Process connection

The individual heights of the components can be found in the following sections:
- Determine the height of the device and add the individual heights
- Take the installation clearance into consideration (space that is needed to install the device)

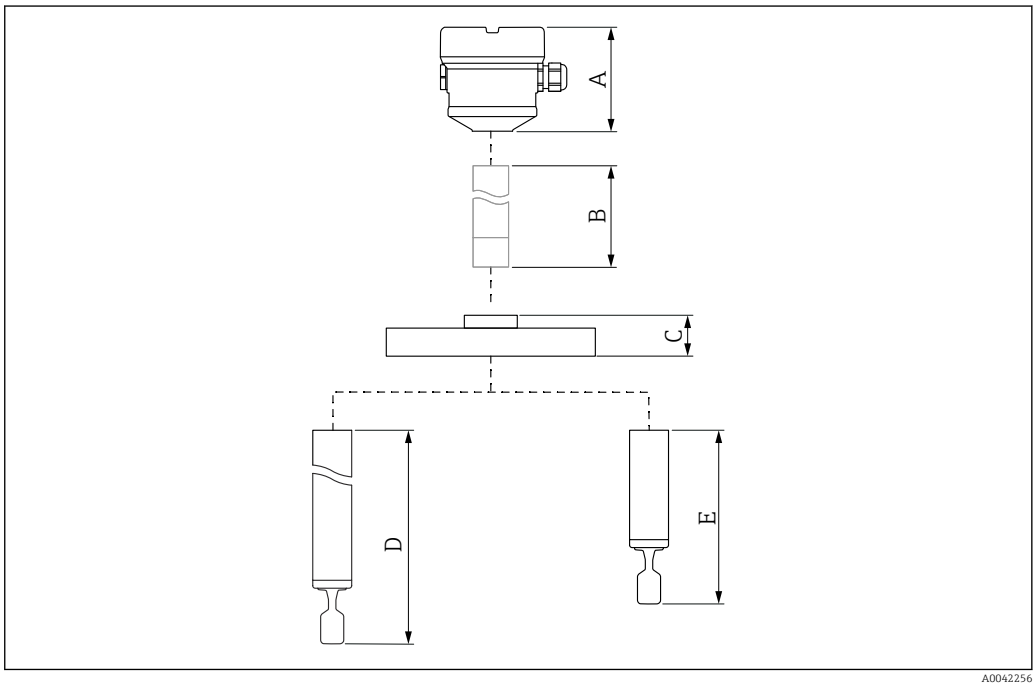

21 Components to determine the device height

A Housing including cover
B Temperature spacer, pressure-tight feedthrough (optional), details in the Product Configurator
C Process connection
D Probe design: pipe extension with tuning fork
E Probe design: short pipe version with tuning fork

Dimensions

Housing and cover

All housings can be aligned. The housing alignment can be secured in place on housings with a locking screw.

Single compartment housing, aluminum

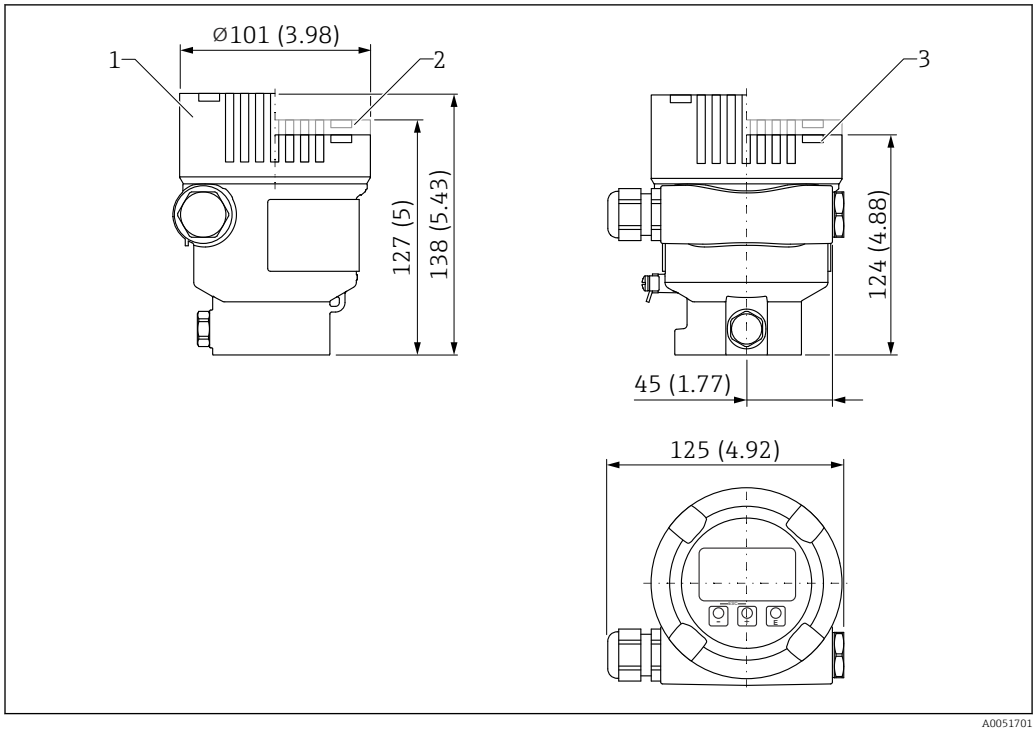

22 Dimensions of single compartment housing, aluminum. Unit of measurement mm (in)

1 Height with cover comprising glass sight glass (devices for Ex d/XP, dust Ex)
2 Height with cover comprising plastic sight glass
3 Height with cover without sight glass

Dual compartment housing, L-shaped, aluminum or 316 L

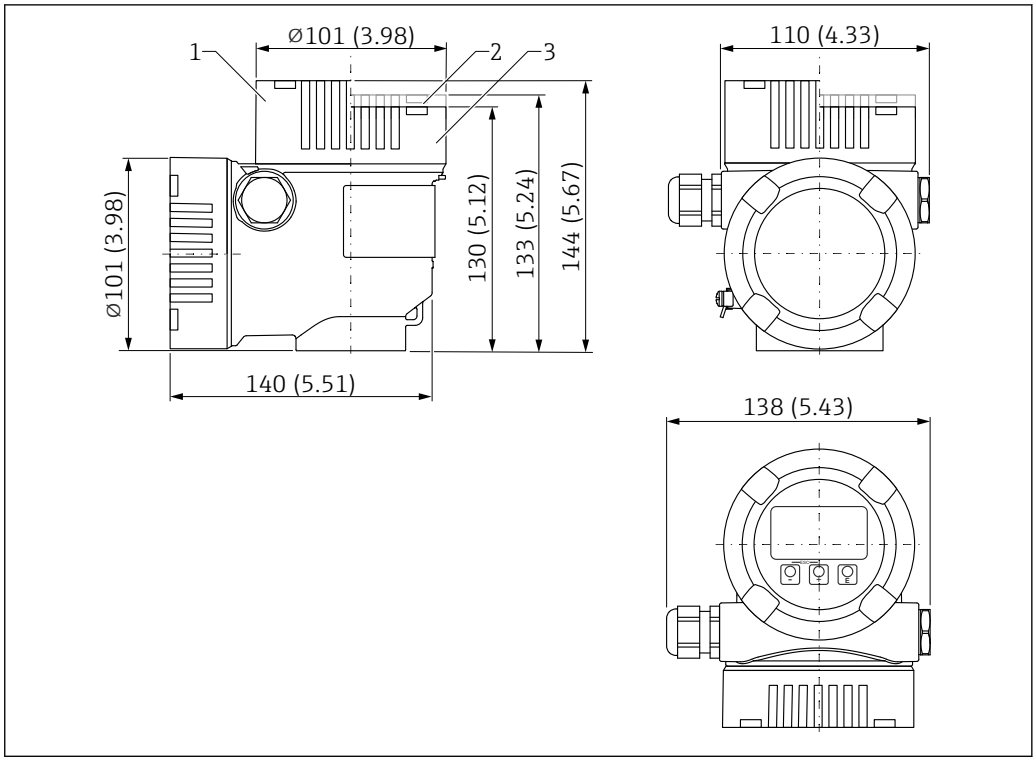

23 Dimensions of L-shaped dual compartment housing. Unit of measurement mm (in)

1 Height with cover comprising glass sight glass (devices for Ex d/XP, dust Ex)
2 Height with cover comprising plastic sight glass
3 Cover without sight glass

Temperature spacer, pressure-tight feedthrough (optional)

Provides sealed insulation for the vessel and a normal ambient temperature for the housing

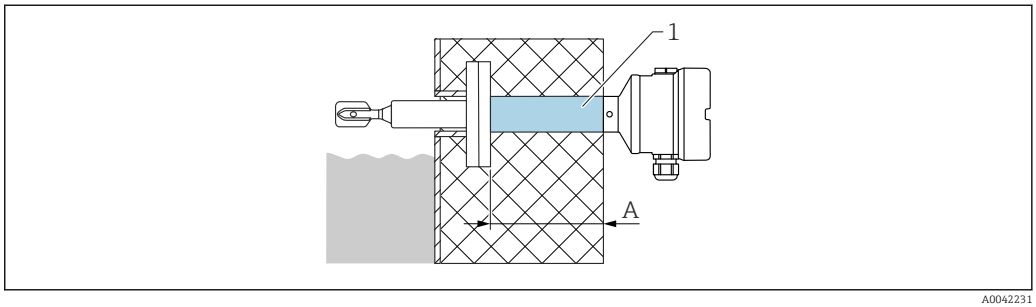

Unit of measurement mm (in)

1 Temperature spacer, pressure-tight feedthrough with maximum insulation length
A 140 mm (5.51 in)

Product Configurator, feature "Sensor design":
- Temperature spacer
- Pressure-tight feedthrough (second line of defense)
  If the sensor is damaged, this protects the housing from vessel pressures up to 100 bar (1 450 psi).

Neither version can be ordered for Ex d

The "Pressure-tight feedthrough" version can only be selected in conjunction with the "Temperature spacer" option.

Ex d glass feedthrough for pipe extensions

If a pipe extension is required in combination with an Ex d approval, the following design is used:

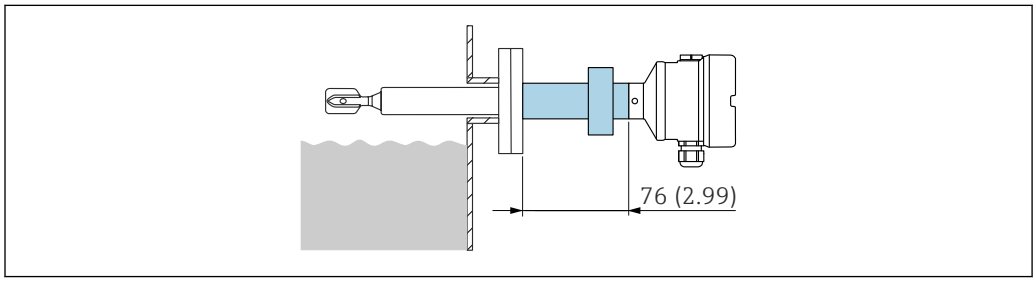

24 Ex d glass feedthrough for pipe extensions. Unit of measurement mm (in)

Probe design

Short pipe
Fixed length (A)
- Base material: 316L
- Sensor length: approx. 115 mm (4.53 in)
- Flanges according to DIN/EN, ASME, JIS from DN 40 / 1½"
  For DN25/ASME flanges, the radius (R) ≤ 4 mm (0.16 in) applies

Pipe extension
Variable length L (B)
- Base material: 316L
- Sensor length depends on enamel coating: 148 to 1 200 mm (5.83 to 47.2 in)
- Sensor length depends on plastic coating: 148 to 3 000 mm (5.83 to 118 in)
- Length tolerances L: < 1 m (3.3 ft) = −5 mm (−0.2 in), 1 to 3 m (3.3 to 9.8 ft) = (−10 mm (−0.39 in)

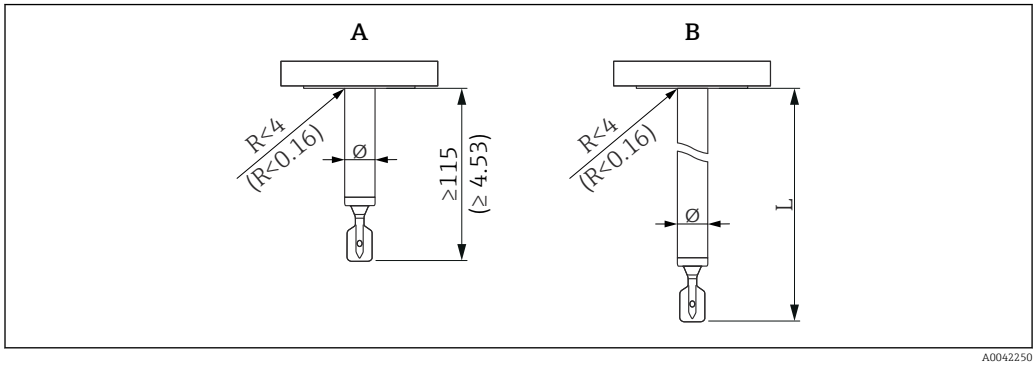

25 Probe design: short pipe, pipe extension. Unit of measurement mm (in)

A Short pipe: fixed length
B Pipe extension: variable length L
Ø Maximum diameter: depends on coating material
R Radius: take into consideration for counterflange

Tuning fork

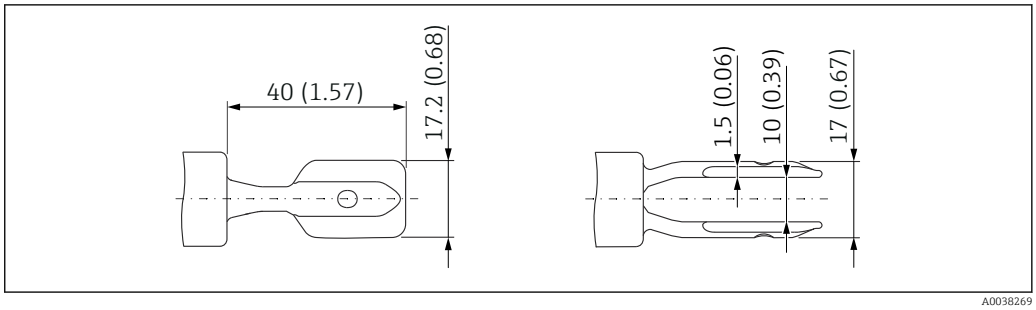

26 *Tuning fork with plastic coating (ECTFE, PFA). Unit of measurement mm (in)*

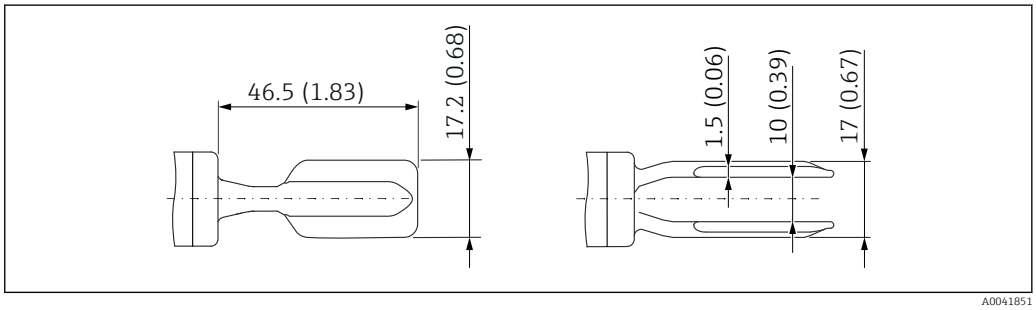

27 *Tuning fork with enamel coating. Unit of measurement mm (in)*

Process connections

Process connection, sealing surface

- Flange ASME B16.5, RF (Raised Face)
- Flange EN1092-1, Form A
- Flange EN1092-1, Form B1
- Flange JIS B2220, RF (Raised Face)

Height of process connection

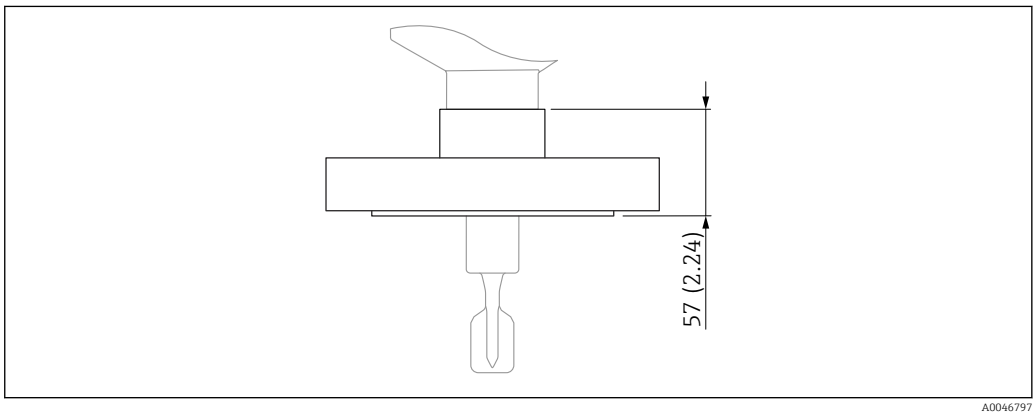

28 *Process connection with flange (maximum specification of height) . Unit of measurement mm (in)*

ASME B16.5 flanges, RF

Pressure rating	Type	Material	Weight
Cl.150	NPS 1"	316/316L	1.0 kg (2.21 lb)
Cl.150	NPS 1-½"	316/316L	1.5 kg (3.31 lb)
Cl.150	NPS 2"	316/316L	2.4 kg (5.29 lb)

Pressure rating	Type	Material	Weight
Cl.150	NPS 2"	Enamel 1.0487	2.4 kg (5.29 lb)
Cl.150	NPS 3"	316/316L	4.9 kg (10.8 lb)
Cl.150	NPS 4"	316/316L	7 kg (15.44 lb)
Cl.300	NPS 2"	316/316L	3.2 kg (7.06 lb)
Cl.300	NPS 2"	Enamel 1.0487	3.2 kg (7.06 lb)

EN flanges EN 1092-1, A

Pressure rating	Type	Material	Weight
PN6	DN50	316L (1.4404)	1.6 kg (3.53 lb)
PN10/16	DN100	316L (1.4404)	5.6 kg (12.35 lb)
PN25/40	DN25	316L (1.4404)	1.3 kg (2.87 lb)
PN25/40	DN32	316L (1.4404)	2.0 kg (4.41 lb)
PN25/40	DN40	316L (1.4404)	2.4 kg (5.29 lb)
PN25/40	DN50	316L (1.4404)	3.2 kg (7.06 lb)
PN25/40	DN80	316L (1.4404)	5.9 kg (13.01 lb)

EN flanges EN 1092-1, B1

Pressure rating	Type	Material	Weight
PN25/40	DN50	Enamel 1.0487	3.2 kg (7.06 lb)
PN25/40	DN80	Enamel 1.0487	5.9 kg (13.01 lb)

JIS flanges B2220 (RF)

Pressure rating	Type	Material	Weight
10K	10K 50A	316L (1.4404)	1.7 kg (3.75 lb)

Coating material and layer thickness

The maximum diameter Ø depends on the coating material.

ECTFE
- Lower limit: 0.5 mm (0.02 in)
- Upper limit: 1.6 mm (0.06 in)
- Maximum diameter: Ø 24.6 mm (0.97 in)

PFA (Edlon™), PFA (RubyRed®), PFA (conductive)
- Lower limit: 0.45 mm (0.02 in)
- Upper limit: 1.6 mm (0.06 in)
- Maximum diameter: Ø 24.6 mm (0.97 in)

PFA (Edlon™): FDA-compliant material in accordance with 21 CFR Part 177.1550/2600

Enamel
- Lower limit: 0.4 mm (0.02 in)
- Upper limit: 0.8 mm (0.03 in)
- Maximum diameter: Ø 23 mm (0.91 in)

Properties and benefits of coatings

ECTFE (ethylene chlorotrifluoroethylene)
- Thermoplastic fluoropolymer coating
- Also known as HALAR®
- Very good chemical and corrosion resistance

- High abrasion performance
- Good non-stick properties
- Ideal for use in the chemicals industry

PFA (perfluoroalkoxy)
- Properties similar to PTFE (polytetrafluoroethylene) and FEP (perfluoroethylenepropylene)
- Also known as Teflon®-PFA
- Very good chemical and corrosion resistance
- High abrasion performance
- Good non-stick and sliding properties
- High temperature stability
- Ideal for use in the chemical and pharmaceutical industry
- Available as PFA (Edlon™), PFA (Ruby Red®) or also as PFA (conductive), specially developed for use in explosive atmospheres

PFA (Edlon™): FDA-compliant material in accordance with 21 CFR Part 177.1550/2600

Enamel
- Glass-like material
- Very good chemical and corrosion resistance
- Acid-resistant
- High temperature stability
- Dirt-repellent
- Low resistance to impact

Use of the selected coating material influences the approved IIB/IIC gas groups. Pay attention to the information in the safety documentation (XA).

Weight

Housing
Weight including electronics and display (graphic display):

Single compartment housing
Aluminum: 1.1 kg (2.43 lb)

Dual compartment housing, L-form
- Aluminum: 1.7 kg (3.75 lb)
- 316L: 4.3 kg (9.48 lb)

Temperature spacer
0.6 kg (1.32 lb)

Pressure-tight feedthrough
0.7 kg (1.54 lb)

Ex d glass feedthrough
0.5 kg (1.10 lb)

Pipe extension
- 1000 mm: 0.9 kg (1.98 lb)
- 50 in: 1.15 kg (2.54 lb)

Process connection

See "Process connections" section

Protective cover, plastic
0.2 kg (0.44 lb)

Protective cover, 316L
0.93 kg (2.05 lb)

Materials

Materials in contact with process

Pipe extension

- With plastic coating: carrier material: 316L (1.4435 or 1.4404)
- With enamel coating: carrier material: Alloy C4

Tuning fork

- With plastic coating: carrier material: 316L (1.4435 or 1.4404)
- With enamel coating: carrier material: Alloy C4

Flanges

- With ECTFE, PFA (Edlon™) [1], PFA (RubyRed), PFA (conductive): carrier material: 316L (1.4404)
- With enamel coating: carrier material: A516 Gr.60 (1.0487), (ASTMA 529)
- Additional flanges:
  - According to EN/DIN 1092-1 from DN 25
  - According to ASME B16.5 from 1"
  - According to JIS B 2220 (RF) from 10K50

Materials not in contact with process

Aluminum housing, coated

- Housing: aluminum EN AC 43400
  Polyester powder coating on aluminum as per EN1706 43400 (reduced copper content ≤ 0.1 % to prevent corrosion)
- Coating: Polyester
- Dummy cover: aluminum EN AC 43400
- Cover with sight glass: EN AC 43400 aluminum, PC Lexan 943A synthetic glass
  - Cover with polycarbonate sight glass optionally available
  - For Ex d applications, the sight glass is made from borosilicate.
- Cover sealing materials: HNBR
- Cover sealing materials: FVMQ (in low-temperature version only)
- Stopper: aluminum
  Plastic (PBT-GF30-FR) in non-hazardous, Ex i or IS combination with plastic cable gland, M20 thread or G ½ thread
- Nameplate: plastic foil
- TAG plate: plastic foil, stainless steel or provided by the customer
- M20 cable glands: select material (stainless steel, nickel-plated brass, polyamide)

L-shaped aluminum housing, coated

- Polyester powder coating on aluminum as per EN1706 AC43400 (reduced copper content ≤ 0.1 % to prevent corrosion)
- Stainless steel (ASTM A351 : CF3M (cast equivalent to material AISI 316L)/DIN EN 10213 : 1.4409)

Stainless steel housing, 316L

- Housing: stainless steel AISI 316L (1.4409)
  Stainless steel (ASTM A351 : CF3M (cast equivalent to material AISI 316L)/DIN EN 10213 : 1.4409)
- Dummy cover: stainless steel AISI 316L (1.4409)
- Cover with sight glass: borosilicate
- Stopper: stainless steel
- Cover sealing materials: FVMQ (in low-temperature version only)
- Cover sealing materials: HNBR
- Nameplate: stainless steel housing, labeled directly
- TAG plate: plastic foil, stainless steel or provided by the customer
- M20 cable glands: select material (stainless steel, nickel-plated brass, polyamide)

Aluminum housing nameplate

Adhesive plastic film label

Nameplate of stainless steel housing

Stainless steel housing, labeled directly

Wired-on nameplate

- Stainless steel
- Plastic film
- Provided by customer
- RFID tag: polyurethane potting compound

1) FDA-compliant material in accordance with 21 CFR Part 177.1550/2600

Cable entries

- M20 gland:
  Plastic, brass nickel plated or 316L (depends on version ordered)
  Dummy plug made of plastic, aluminum or 316L (depends on version ordered)
- Thread M20:
  Dummy plug made of aluminum or 316L (depends on version ordered)
- Thread G ½:
  Adapter made of aluminum or 316L (depends on version ordered)
  If the G ½ thread is selected, the device is provided with an M20 thread as standard and an adapter to G ½ is included, along with the associated documentation
- Thread NPT ½:
  Dummy plug made of aluminum or 316L (depends on version ordered)
- M12 plug:
  CuZn nickel-plated or 316L (depends on version ordered)
  Dummy plug made of aluminum or 316L (depends on version ordered)

User interface

Operating concept

Operator-oriented menu structure for user-specific tasks
- Guidance
- Diagnostics
- Application
- System

Fast and safe commissioning
- Interactive wizard with graphical user interface for guided commissioning in FieldCare, DeviceCare or DTM, AMS and PDM-based third-party tools or SmartBlue
- Menu guidance with short explanations of the individual parameter functions
- Standardized operation at the device and in the operating tools

Integrated HistoROM data memory
- Adoption of data configuration when electronics modules are replaced
- Up to 100 event messages recorded in the device

Efficient diagnostic behavior increases measurement availability
- Remedial measures are integrated in plain text
- Diverse simulation options

Bluetooth (optionally integrated in local display)
- Quick and easy setup with SmartBlue app or PC with DeviceCare, version 1.07.05 and higher, or FieldXpert SMT70
- No additional tools or adapters required
- Encrypted single point-to-point data transmission (tested by Fraunhofer Institute) and password-protected communication via *Bluetooth*® wireless technology

Languages

Operating languages
- **English** option (**English** option is set at the factory if no other language is ordered)
- Deutsch
- Français
- Español
- Italiano
- Nederlands
- Portuguesa
- Polski
- русский язык (Russian)
- Türkçe
- 中文 (Chinese)
- 日本語 (Japanese)
- 한국어 (Korean)
- čeština (Czech)
- Svenska

Onsite operation

FEL60H electronic insert

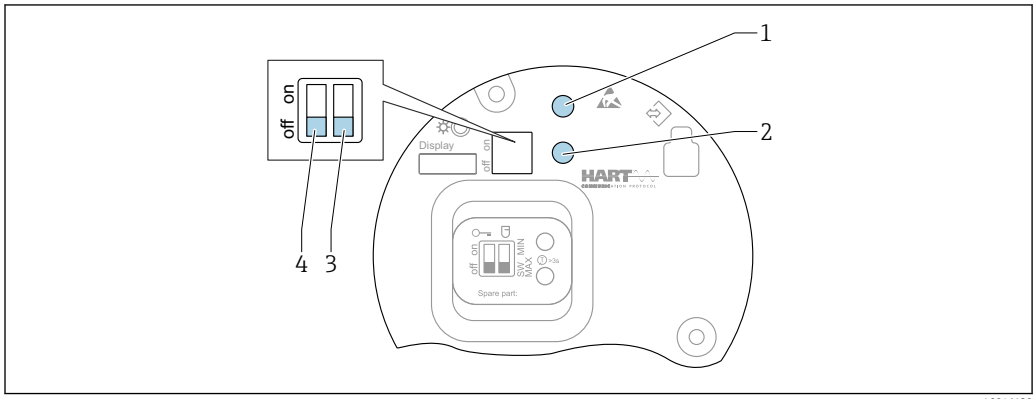

A0046129

29 Operating keys and DIP switch on FEL60H electronic insert

1 Operating key for reset password (for Bluetooth login and Maintenanceuser role)
1+2 Operating keys for device reset (as-delivered state)
2 Operating key for "Proof test" wizard (> 3 s)
3 DIP switch for safety function, software-defined (SW, default = MAX) or permanently MIN (in the SW switch position, the MIN or MAX setting is defined by the software. MAX is the default value. In the MIN switch position, the setting is permanently MIN irrespective of the software).
4 DIP switch for locking and unlocking the device

- Minimum/maximum quiescent current safety can be switched at the electronic insert
- MAX = maximum safety: when the tuning fork is covered the output switches to demand mode, e.g. use for overfill protection
- MIN = minimum safety: when the tuning fork is uncovered, the output switches to demand mode, e.g. use to prevent pumps from running dry

- The setting of the DIP switches on the electronic insert has priority over the settings made via other operation methods (e.g. FieldCare/DeviceCare).
- Density switchover: A density preset can be ordered as an option or configured via display, Bluetooth and HART.

Local display

Device display (optional)

Functions:
- Display of measured values and fault and notice messages
- Background lighting, which switches from green to red in the event of an error
- The device display can be removed for easier operation

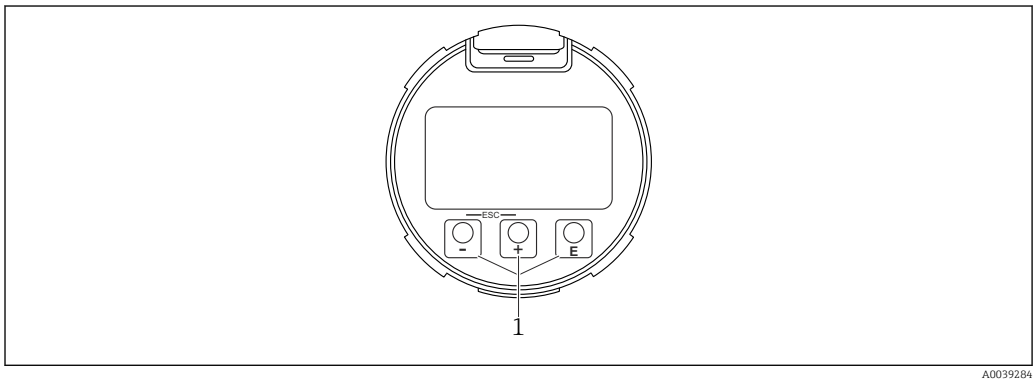

A0039284

30 Graphic display with optical operating keys (1)

Remote operation

Via HART protocol

Via service interface (CDI)

Operation via Bluetooth® wireless technology (optional)

Prerequisite
- Measuring device with display including Bluetooth
- Smartphone or tablet with Endress+Hauser SmartBlue app or PC with DeviceCare from version 1.07.05 or FieldXpert SMT70

The connection has a range of up to 25 m (82 ft). The range can vary depending on environmental conditions such as attachments, walls or ceilings.

The operating keys on the display are locked as soon as the device is connected via Bluetooth.

System integration

HART

Version 7

Supported operating tools

Smartphone or tablet with Endress+Hauser SmartBlue app, DeviceCare from version 1.07.05, FieldCare, DTM, AMS and PDM

HistoROM data management

When replacing the electronic insert, the stored data is transferred by reconnecting the HistoROM.

The device serial number is saved in the HistoROM. The electronics serial number is saved in the electronics.

Certificates and approvals

Current certificates and approvals for the product are available at www.endress.com on the relevant product page:

1. Select the product using the filters and search field.
2. Open the product page.
3. Select **Downloads**.

CE mark

The measuring system meets the legal requirements of the applicable EU Directives. These are listed in the corresponding EU Declaration of Conformity together with the standards applied. Endress +Hauser confirms successful testing of the device by affixing to it the CE mark.

RCM marking

The supplied product or measuring system meets the ACMA (Australian Communications and Media Authority) requirements for network integrity, interoperability, performance characteristics as well as health and safety regulations. Here, especially the regulatory arrangements for electromagnetic compatibility are met. The products bear the RCM marking on the nameplate.

A0029561

Ex-approval

All data relating to explosion protection are provided in separate Ex documentation and are available from the Downloads Area. The Ex documentation is supplied as standard with all devices approved for use in explosion hazardous areas.

Explosion-protected smartphones and tablets

If used in hazardous areas, mobile end devices with an Ex approval must be used.

Overfill protection

Before mounting the device, observe the documentation from the WHG approvals (German Federal Water Act).

Approved for overfill protection and leakage detection.

Product Configurator: feature "Additional approval"

General material compliance

Endress+Hauser guarantees compliance with all relevant laws and regulations, including the current guidelines for materials and substances.

Examples:
- RoHS
- China RoHS
- REACH
- POP VO (Stockholm Convention)

For further information and general declarations of compliance, see the Endress+Hauser website www.endress.com

Functional safety

The Liquiphant has been developed according to the IEC 61508 standard. The device is suitable for overfill protection and dry-running protection up to SIL 2 (SIL 3 with homogeneous redundancy). A detailed description of the safety functions with Liquiphant, settings and functional safety data are provided in the "Functional Safety Manual" on the Endress+Hauser website: www.endress.com → Downloads.

Product Configurator: feature "Additional approval"

Subsequent confirmation of usability according to IEC 61508 is not possible.

Radio approval

Further information and currently available documentation can be found on the Endress+Hauser website: www.endress.com → Downloads.

CRN approval

Versions with a CRN approval (Canadian Registration Number) are listed in the corresponding registration documents. CRN-approved devices are marked with a registration number.

Any restrictions regarding the maximum process pressure values are listed on the CRN certificate.

Product Configurator: feature "Additional approval"

Service

- Cleaned of oil+grease (wetted)
- ANSI safety red coating (housing cover)
- Switching delay setting to be spec.
- Setting for MIN safety mode
- Setting for HART burst mode PV
- Setting for max. alarm current
- Preset density > 0.4 g/cm³ (25.0 lb/ft³)
- Preset density > 0.5 g/cm³ (31.2 lb/ft³)
- Bluetooth communication is disabled on delivery

Test, certificate, declaration

Documents available to order in the Product Configurator, feature "Test, certificate, declaration":
- Inspection certificate 3.1, EN10204 (material certificate, pressure-bearing parts)
- ASME B31.3 process piping, declaration
- ASME B31.1 process piping, declaration
- Pressure test, internal procedure, test report
- Helium leak-tightness test, internal procedure, test report
- Welding documentation, wetted/pressurized seams, declaration/ISO/ASME
  Welding documentation consisting of:
  - Welding drawings
  - WPQR (Welding Procedure Qualification Record) according to ISO 14613/ISO14614 or ASME Sect. IX
  - WPS (Welding Procedure Specifications)
  - WQR (Welder Qualification Record)

Documentation currently available on the Endress+Hauser website: www.endress.com → Downloads or with the serial number of the device under Online Tools in the Device Viewer.

Pressure Equipment Directive

Pressure equipment with permitted pressure ≤ 200 bar (2 900 psi)

Pressure instruments with a process connection that does not have a pressurized housing do not fall within the scope of the Pressure Equipment Directive, irrespective of the maximum allowable pressure.

Reasons:

According to Article 2, point 5 of EU Directive 2014/68/EU, pressure accessories are defined as "devices with an operational function and having pressure-bearing housings".

If a pressure instrument does not have a pressure-bearing housing (no identifiable pressure chamber of its own), there is no pressure accessory present within the meaning of the Directive.

Process seal as per ANSI/ISA 12.27.01

North American practice for the installation of process seals. In accordance with ANSI/ISA 12.27.01, Endress+Hauser devices are designed as either single seal or dual seal devices with a warning message. This allows the user to waive the use of - and save the cost of installing - an external secondary process seal in the protective conduit as required in ANSI/NFPA 70 (NEC) and CSA 22.1 (CEC). These instruments comply with North American installation practice and allow very safe and cost-effective installation for pressurized applications with hazardous fluids. More information is provided in the Safety Instructions (XA) for the relevant device.

The following housings are approved as single seal devices:
single compartment, aluminum

EAC conformity

The measuring system meets the legal requirements of the applicable EAC guidelines. These are listed in the corresponding EAC Declaration of Conformity along with the standards applied.

The manufacturer confirms successful testing of the device by affixing to it the EAC mark.

ASME B 31.3/31.1

Design and materials in accordance with ASME B31.3/31.1. The welds are through-penetration welded and meet the requirements of the ASME Boiler and Pressure Vessel Code, Section IX and EN ISO 15614-1.

Ordering information

Detailed ordering information is available from your nearest sales organization www.addresses.endress.com or in the Product Configurator at www.endress.com:

1. Select the product using the filters and search field.
2. Open the product page.
3. Select **Configuration**.

Product Configurator - the tool for individual product configuration
- Up-to-the-minute configuration data
- Depending on the device: Direct input of measuring point-specific information such as measuring range or operating language
- Automatic verification of exclusion criteria
- Automatic creation of the order code and its breakdown in PDF or Excel output format
- Ability to order directly in the Endress+Hauser Online Shop

TAG

Measuring point (tag)

The device can be ordered with a tag name.

Location of tag name
In the additional specification, select:
- Stainless steel wired-on tag plate
- Paper adhesive label
- Tag provided by the customer
- RFID TAG
- RFID TAG + stainless steel wired-on tag plate
- RFID TAG + paper adhesive label
- RFID TAG + TAG provided by the customer
- IEC61406 stainless steel TAG

- IEC61406 stainless steel TAG + NFC TAG
- IEC61406 stainless steel TAG, stainless steel TAG
- IEC61406 stainless steel TAG + NFC, stainless steel TAG
- IEC61406 stainless steel TAG, plate provided
- IEC61406 stainless steel TAG + NFC, plate provided

Definition of tag name
In the additional specification, specify:
3 lines of maximum 18 characters each
The specified tag name appears on the selected plate and/or on the RFID TAG.

Visualization in SmartBlue app
The first 32 characters of the tag name
The tag name can always be changed specifically for the measuring point via Bluetooth.

Display in electronic nameplate (ENP)
The first 32 characters of the tag name

Test reports, declarations and inspection certificates

All test reports, declarations and inspection certificates are provided electronically in the *Device Viewer*:
Enter the serial number from the nameplate (www.endress.com/deviceviewer)

Product documentation on paper
Test reports, declarations and inspection certificates in hard copy can optionally be ordered with feature 570 "Service", Version I7 "Product documentation on paper". The documents are then provided with the device upon delivery.

Application packages

Heartbeat Technology module

Heartbeat Diagnostics
Continuously monitors and assesses the device condition and process conditions. Generates diagnostic messages when certain events occur and provides troubleshooting measures in accordance with NAMUR NE 107.

Heartbeat Verification
Performs a verification of the current device condition on demand and generates the Heartbeat Technology verification report showing the verification result.

Heartbeat Monitoring
Continuously provides device and/or process data for an external system. Analysis of this data provides a basis for process optimization and predictive maintenance.

Heartbeat Diagnostics

Diagnostic messages output to:
- the local display
- an asset management system (e.g. FieldCare or DeviceCare)
- an automation system (e.g. PLC)

Heartbeat Verification

- Device monitoring in installed state without interrupting the process, including report
- Clear measuring point assessment (Passed/Failed) with high total test coverage within the framework of manufacturer specifications
- Can be used to document normative requirements

The "Heartbeat Verification" module contains the **Heartbeat Verification** wizard, which verifies the current instrument health and creates the Heartbeat Technology verification report:
- The **Heartbeat Verification** wizard can be used via the SmartBlue app
- The **Heartbeat Verification** wizard guides the user through the entire process for creating the verification report
- The operating hours counter, minimum/maximum temperature indicator and minimum/maximum frequency indicator are displayed.

- If the oscillation frequency of the fork increases, a corrosion warning appears.
- The order configuration of the oscillation frequency in air is indicated in the verification report.
  - A high oscillation frequency is an indicator of corrosion.
  - A lower oscillation frequency indicates buildup or a sensor covered by the medium.
  - Deviations in the oscillation frequency compared to the oscillation frequency on delivery may be caused by the process temperature and pressure.
- Frequency history: Last 16 sensor frequencies that were stored at the time of the Heartbeat Verification

Heartbeat Monitoring

- **Loop diagnostics** wizard: Detection of elevated measuring circuit resistance values or declining power supply
- **Process window** wizard: Two frequency limits for monitoring the upper and lower range of the oscillation frequency (can be defined independently of one another). Changes in the process can be identified, e.g. corrosion or buildup.

Proof testing

The proof test is only available for devices with SIL or WHG approval.

A proof test is required at appropriate intervals in the following applications: SIL (IEC61508/IEC61511), WHG (German Water Resources Act).

The **Proof test** wizard is available with the ordered SIL or WHG approval. The wizard guides the user through the entire process for creating the verification report. The verification report can be saved as a PDF file.

Accessories

Device Viewer

All the spare parts for the device, along with the order code, are listed in the *Device Viewer* (www.endress.com/deviceviewer).

Weather protection cover for dual compartment housing

- Material: stainless steel 316L
- Order number: 71438303

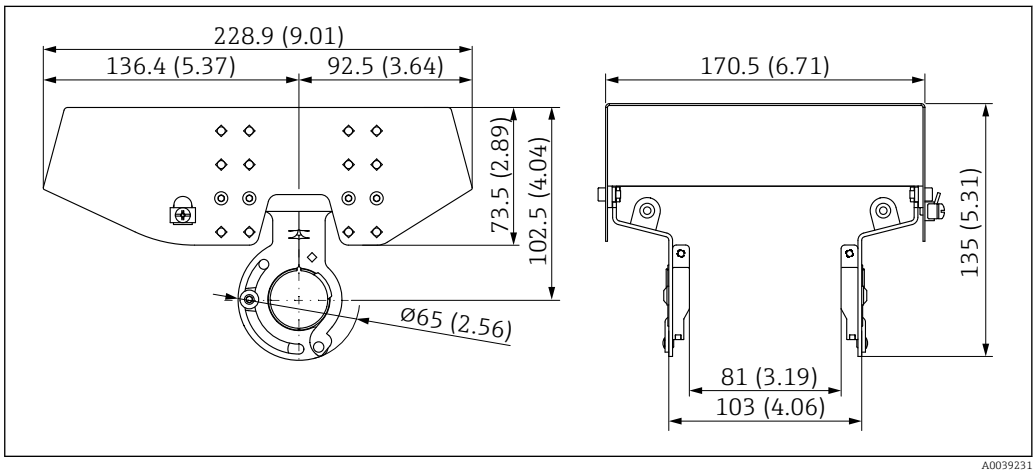

31 *Weather protection cover for dual compartment housing. Unit of measurement mm (in)*

Protective cover for aluminum single compartment housing

- Material: plastic
- Order number: 71438291

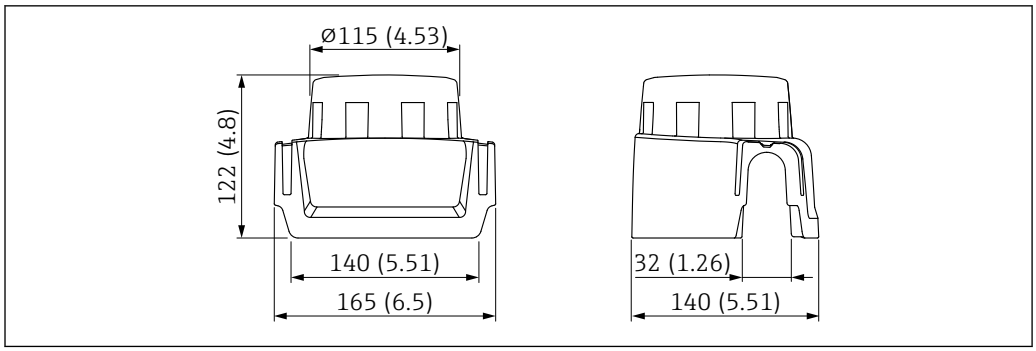

32 *Protective cover for aluminum single compartment housing. Unit of measurement mm (in)*

M12 socket

The M12 sockets listed are suitable for use in the temperature range −25 to +70 °C (−13 to +158 °F).

M12 socket IP69
- Terminated at one end
- Angled
- 5 m (16 ft) PVC cable (orange)
- Slotted nut 316L (1.4435)
- Body: PVC
- Order number: 52024216

M12 socket IP67
- Angled
- 5 m (16 ft) PVC cable (gray)
- Slotted nut Cu Sn/Ni
- Body: PUR
- Order number: 52010285

Documentation

For an overview of the scope of the associated Technical Documentation, refer to the following:
- *Device Viewer* (www.endress.com/deviceviewer): Enter the serial number from the nameplate
- *Endress+Hauser Operations app*: Enter serial number from nameplate or scan matrix code on nameplate.

Standard documentation

Document type: Operating Instructions (BA)
Installation and initial commissioning – contains all functions in the operating menu that are required for a typical measuring task. Functions beyond this scope are not included.

Document type: Description of Device Parameters (GP)
The document is part of the Operating Instructions and serves as a reference for parameters, providing a detailed explanation of each individual parameter of the operating menu.

Document type: Brief Operating Instructions (KA)
Quick guide to the first measured value – includes all essential information from incoming acceptance to electrical connection.

Document type: Safety Instructions, certificates
Depending on the approval, Safety Instructions are supplied with the device, e.g. XA. This documentation is an integral part of the Operating Instructions.
The nameplate indicates which Safety Instructions (XA) apply to the device in question.

Supplementary device-dependent documentation

Additional documents are supplied depending on the device version ordered: Always comply strictly with the instructions in the supplementary documentation. The supplementary documentation is an integral part of the device documentation.

Special documentation

- SD02874F: Heartbeat Verification + Monitoring application package
- SD02530P: Graphic display with Bluetooth, radio approval
- TI00426F: Weld-in adapter, process adapter and flanges (overview)

Registered trademarks

HART®
Registered trademark of the FieldComm Group, Austin, Texas, USA

Bluetooth®
The *Bluetooth®* word mark and logos are registered trademarks owned by the Bluetooth SIG, Inc. and any use of such marks by Endress+Hauser is under license. Other trademarks and trade names are those of their respective owners.

Apple®
Apple, the Apple logo, iPhone, and iPod touch are trademarks of Apple Inc., registered in the U.S. and other countries. App Store is a service mark of Apple Inc.

Android®
Android, Google Play and the Google Play logo are trademarks of Google Inc.

71630443

www.addresses.endress.com

Endress+Hauser

People for Process Automation