BA01563D/06/EN/01.16
71303306

Valid as of version
(Device firmware)

Operating Instructions
Proline Promass H 500 FOUNDATION Fieldbus

Coriolis flowmeter

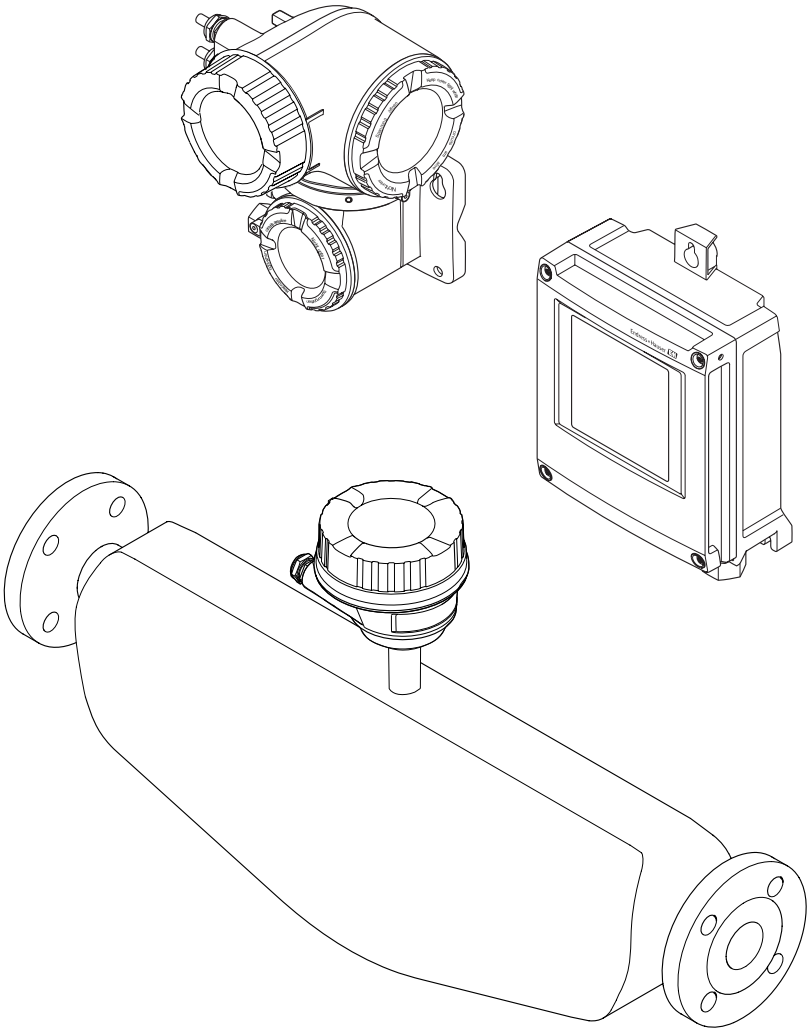

Endress+Hauser
People for Process Automation

- Make sure the document is stored in a safe place such that it is always available when working on or with the device.
- To avoid danger to individuals or the facility, read the "Basic safety instructions" section carefully, as well as all other safety instructions in the document that are specific to working procedures.
- The manufacturer reserves the right to modify technical data without prior notice. Your Endress+Hauser Sales Center will supply you with current information and updates to these instructions.

Table of contents

1 Document information 6
1.1 Document function 6
1.2 Symbols used 6
1.2.1 Safety symbols 6
1.2.2 Electrical symbols 6
1.2.3 Communication symbols 6
1.2.4 Tool symbols 7
1.2.5 Symbols for certain types of information 7
1.2.6 Symbols in graphics 7
1.3 Documentation 8
1.3.1 Standard documentation 8
1.3.2 Supplementary device-dependent documentation 8
1.4 Registered trademarks 9

2 Basic safety instructions 10
2.1 Requirements for the personnel 10
2.2 Designated use 10
2.3 Workplace safety 11
2.4 Operational safety 11
2.5 Product safety 11
2.6 IT security 12
2.7 Device-specific IT security 12
2.7.1 Protecting access via hardware write protection 12
2.7.2 Protecting access via a password 12
2.7.3 Access via fieldbus 13
2.7.4 Access via Web server 13

3 Product description 14
3.1 Product design 14
3.1.1 Proline 500 – digital 14
3.1.2 Proline 500 15

4 Incoming acceptance and product identification 16
4.1 Incoming acceptance 16
4.2 Product identification 16
4.2.1 Transmitter nameplate 17
4.2.2 Sensor nameplate 19
4.2.3 Symbols on measuring device 20

5 Storage and transport 21
5.1 Storage conditions 21
5.2 Transporting the product 21
5.2.1 Measuring devices without lifting lugs 21
5.2.2 Measuring devices with lifting lugs . . 22
5.2.3 Transporting with a fork lift 22
5.3 Packaging disposal 22

6 Installation 22
6.1 Installation conditions 22
6.1.1 Mounting position 22
6.1.2 Requirements from environment and process 24
6.1.3 Special mounting instructions 27
6.2 Mounting the measuring device 28
6.2.1 Required tools 28
6.2.2 Preparing the measuring device 29
6.2.3 Mounting the measuring device 29
6.2.4 Mounting the transmitter housing: Proline 500 – digital 29
6.2.5 Mounting the transmitter housing: Proline 500 31
6.2.6 Turning the transmitter housing: Proline 500 32
6.2.7 Turning the display module: Proline 500 33
6.3 Post-installation check 33

7 Electrical connection 34
7.1 Connection conditions 34
7.1.1 Required tools 34
7.1.2 Requirements for connecting cable . . . 34
7.1.3 Terminal assignment 37
7.1.4 Device plugs available 37
7.1.5 Pin assignment of device plug 38
7.1.6 Preparing the measuring device 38
7.2 Connecting the measuring device 39
7.2.1 Connecting the connecting cable 39
7.2.2 Connecting the signal cable and the supply voltage cable 45
7.3 Connecting the measuring device 47
7.3.1 Connecting the connecting cable 47
7.3.2 Connecting the signal cable and the supply voltage cable 51
7.4 Ensure potential equalization 53
7.4.1 Requirements 53
7.5 Special connection instructions 54
7.5.1 Connection examples 54
7.6 Ensuring the degree of protection 56
7.7 Post-connection check 57

8 Operation options 58
8.1 Overview of operation options 58
8.2 Structure and function of the operating menu 59
8.2.1 Structure of the operating menu 59
8.2.2 Operating philosophy 60
8.3 Access to the operating menu via the local display 61
8.3.1 Operational display 61
8.3.2 Navigation view 63
8.3.3 Editing view 65

8.3.4 Operating elements 66
8.3.5 Opening the context menu 67
8.3.6 Navigating and selecting from list . . . 69
8.3.7 Calling the parameter directly 69
8.3.8 Calling up help text 70
8.3.9 Changing the parameters 71
8.3.10 User roles and related access authorization 72
8.3.11 Disabling write protection via access code 72
8.3.12 Enabling and disabling the keypad lock 72
8.4 Access to the operating menu via the Web browser 73
8.4.1 Function range 73
8.4.2 Prerequisites 73
8.4.3 Establishing a connection 75
8.4.4 Logging on 77
8.4.5 User interface 78
8.4.6 Disabling the Web server 79
8.4.7 Logging out 79
8.5 Access to the operating menu via the operating tool 79
8.5.1 Connecting the operating tool 80
8.5.2 Field Xpert SFX350, SFX370 82
8.5.3 FieldCare 83
8.5.4 DeviceCare 84
8.5.5 AMS Device Manager 84
8.5.6 Field Communicator 475 85

9 System integration 86

9.1 Overview of device description files 86
9.1.1 Current version data for the device . . . 86
9.1.2 Operating tools 86
9.2 Cyclic data transmission 86
9.2.1 Block model 86
9.2.2 Description of the modules 87
9.2.3 Execution times 90
9.2.4 Methods 91

10 Commissioning 92

10.1 Function check 92
10.2 Switching on the measuring device 92
10.3 Connecting via FieldCare 92
10.4 Setting the operating language 92
10.5 Configuring the measuring device 93
10.5.1 Defining the tag name 94
10.5.2 Setting the system units 94
10.5.3 Selecting and setting the medium . . . 97
10.5.4 Configuring the analog inputs 99
10.5.5 Displaying the I/O configuration . . . 100
10.5.6 Configuring the current input 100
10.5.7 Configuring the status input 101
10.5.8 Configuring the current output 102
10.5.9 Configuring the pulse/frequency/ switch output 105
10.5.10 Configuring the relay output 114
10.5.11 Configuring the local display 116
10.5.12 Configuring the low flow cut off 119
10.5.13 Configuring the partial filled pipe detection 120
10.6 Advanced settings 121
10.6.1 Using the parameter to enter the access code 122
10.6.2 Calculated values 122
10.6.3 Carrying out a sensor adjustment . . . 123
10.6.4 Configuring the totalizer 124
10.6.5 Carrying out additional display configurations 126
10.6.6 WLAN configuration 129
10.6.7 Configuration management 130
10.6.8 Using parameters for device administration 131
10.7 Simulation 133
10.8 Protecting settings from unauthorized access 136
10.8.1 Write protection via access code . . . 136
10.8.2 Write protection via write protection switch 137
10.8.3 Write protection via block operation 139

11 Operation 140

11.1 Reading the device locking status 140
11.2 Adjusting the operating language 140
11.3 Configuring the display 140
11.4 Reading measured values 140
11.4.1 "Measured variables" submenu 141
11.4.2 "Totalizer" submenu 142
11.4.3 "Input values" submenu 143
11.4.4 Output values 144
11.5 Adapting the measuring device to the process conditions 146
11.6 Performing a totalizer reset 146
11.6.1 Function scope of the "Control Totalizer" parameter 147
11.6.2 Function scope of the "Reset all totalizers" parameter 147
11.7 Showing data logging 147

12 Diagnostics and troubleshooting . . 150

12.1 General troubleshooting 150
12.2 Diagnostic information via light emitting diodes 152
12.2.1 Transmitter 152
12.2.2 Sensor connection housing 154
12.3 Diagnostic information on local display 156
12.3.1 Diagnostic message 156
12.3.2 Calling up remedial measures 158
12.4 Diagnostic information in the Web browser . 158
12.4.1 Diagnostic options 158
12.4.2 Calling up remedy information 159
12.5 Diagnostic information in DeviceCare or FieldCare 159
12.5.1 Diagnostic options 159
12.5.2 Calling up remedy information 160

12.6 Adapting the diagnostic information 161
12.6.1 Adapting the diagnostic behavior . . . 161
12.6.2 Adapting the status signal 161
12.7 Overview of diagnostic information 165
12.7.1 Diagnostic of sensor 166
12.7.2 Diagnostic of electronic 168
12.7.3 Diagnostic of configuration 174
12.7.4 Diagnostic of process 181
12.8 Pending diagnostic events 186
12.9 Diagnostic messages in the DIAGNOSTIC Transducer Block 187
12.10 Diagnostic list 187
12.11 Event logbook 188
12.11.1 Event history 188
12.11.2 Filtering the event logbook 189
12.11.3 Overview of information events 189
12.12 Resetting the measuring device 190
12.12.1 Function scope of the "Restart" parameter 190
12.13 Device information 191
12.14 Firmware history 192

13 Maintenance 193

13.1 Maintenance tasks 193
13.1.1 Exterior cleaning 193
13.2 Measuring and test equipment 193
13.3 Endress+Hauser services 193

14 Repairs 194

14.1 General notes 194
14.1.1 Repair and conversion concept 194
14.1.2 Notes for repair and conversion 194
14.2 Spare parts 194
14.3 Endress+Hauser services 194
14.4 Return 194
14.5 Disposal 195
14.5.1 Removing the measuring device 195
14.5.2 Disposing of the measuring device . . 195

15 Accessories 196

15.1 Device-specific accessories 196
15.1.1 For the transmitter 196
15.1.2 For the sensor 197
15.2 Communication-specific accessories 197
15.3 Service-specific accessories 197
15.4 System components 198

16 Technical data 199

16.1 Application 199
16.2 Function and system design 199
16.3 Input 200
16.4 Output 202
16.5 Power supply 208
16.6 Performance characteristics 209
16.7 Installation 213
16.8 Environment 213
16.9 Process 214
16.10 Mechanical construction 216
16.11 Operability 220
16.12 Certificates and approvals 223
16.13 Application packages 225
16.14 Accessories 226
16.15 Supplementary documentation 226

Index 228

1 Document information

1.1 Document function

These Operating Instructions contain all the information that is required in various phases of the life cycle of the device: from product identification, incoming acceptance and storage, to mounting, connection, operation and commissioning through to troubleshooting, maintenance and disposal.

1.2 Symbols used

1.2.1 Safety symbols

Symbol	Meaning
DANGER	**DANGER!** This symbol alerts you to a dangerous situation. Failure to avoid this situation will result in serious or fatal injury.
WARNING	**WARNING!** This symbol alerts you to a dangerous situation. Failure to avoid this situation can result in serious or fatal injury.
CAUTION	**CAUTION!** This symbol alerts you to a dangerous situation. Failure to avoid this situation can result in minor or medium injury.
NOTICE	**NOTE!** This symbol contains information on procedures and other facts which do not result in personal injury.

1.2.2 Electrical symbols

Symbol	Meaning
⎓	Direct current
∼	Alternating current
≂	Direct current and alternating current
⏚	**Ground connection** A grounded terminal which, as far as the operator is concerned, is grounded via a grounding system.
⏚	**Protective ground connection** A terminal which must be connected to ground prior to establishing any other connections.
⏚	**Equipotential connection** A connection that has to be connected to the plant grounding system: This may be a potential equalization line or a star grounding system depending on national or company codes of practice.

1.2.3 Communication symbols

Symbol	Meaning
	Wireless Local Area Network (WLAN) Communication via a wireless, local network.
	Bluetooth Wireless data transmission between devices over a short distance.

Symbol	Meaning
	LED Light emitting diode is off.
	LED Light emitting diode is on.
	LED Light emitting diode is flashing.

1.2.4 Tool symbols

Symbol	Meaning
	Torx screwdriver
	Phillips head screwdriver
	Open-ended wrench

1.2.5 Symbols for certain types of information

Symbol	Meaning
	Permitted Procedures, processes or actions that are permitted.
	Preferred Procedures, processes or actions that are preferred.
	Forbidden Procedures, processes or actions that are forbidden.
	Tip Indicates additional information.
	Reference to documentation
	Reference to page
	Reference to graphic
▶	Notice or individual step to be observed
1., 2., 3....	Series of steps
↳	Result of a step
	Help in the event of a problem
	Visual inspection

1.2.6 Symbols in graphics

Symbol	Meaning
1, 2, 3,...	Item numbers
1., 2., 3....	Series of steps
A, B, C, ...	Views
A-A, B-B, C-C, ...	Sections

Symbol	Meaning
EX	Hazardous area
EX	Safe area (non-hazardous area)
≋➡	Flow direction

1.3 Documentation

For an overview of the scope of the associated Technical Documentation, refer to the following:
- The *W@M Device Viewer* : Enter the serial number from the nameplate (www.endress.com/deviceviewer)
- The *Endress+Hauser Operations App*: Enter the serial number from the nameplate or scan the 2-D matrix code (QR code) on the nameplate.

For a detailed list of the individual documents along with the documentation code → 📄 226

1.3.1 Standard documentation

Document type	Purpose and content of the document
Technical Information	**Planning aid for your device** The document contains all the technical data on the device and provides an overview of the accessories and other products that can be ordered for the device.
Sensor Brief Operating Instructions	**Guides you quickly to the 1st measured value - Part 1** The Sensor Brief Operating Instructions are aimed at specialists with responsibility for installing the measuring device. ▪ Incoming acceptance and product identification ▪ Storage and transport ▪ Installation
Transmitter Brief Operating Instructions	**Guides you quickly to the 1st measured value - Part 2** The Transmitter Brief Operating Instructions are aimed at specialists with responsibility for commissioning, configuring and parameterizing the measuring device (until the first measured value). ▪ Product description ▪ Installation ▪ Electrical connection ▪ Operation options ▪ System integration ▪ Commissioning ▪ Diagnostic information
Description of Device Parameters	**Reference for your parameters** The document provides a detailed explanation of each individual parameter in the Expert operating menu. The description is aimed at those who work with the device over the entire life cycle and perform specific configurations.

1.3.2 Supplementary device-dependent documentation

Additional documents are supplied depending on the device version ordered: Always comply strictly with the instructions in the supplementary documentation. The supplementary documentation is an integral part of the device documentation.

1.4 Registered trademarks

FOUNDATION™ Fieldbus
Registration-pending trademark of the FieldComm Group, Austin, Texas, USA

Applicator®, FieldCare®, DeviceCare ®, Field Xpert™, HistoROM®, TMB®, Heartbeat Technology™
Registered or registration-pending trademarks of the Endress+Hauser Group

2 Basic safety instructions

2.1 Requirements for the personnel

The personnel for installation, commissioning, diagnostics and maintenance must fulfill the following requirements:
- Trained, qualified specialists must have a relevant qualification for this specific function and task.
- Are authorized by the plant owner/operator.
- Are familiar with federal/national regulations.
- Before starting work, read and understand the instructions in the manual and supplementary documentation as well as the certificates (depending on the application).
- Follow instructions and comply with basic conditions.

The operating personnel must fulfill the following requirements:
- Are instructed and authorized according to the requirements of the task by the facility's owner-operator.
- Follow the instructions in this manual.

2.2 Designated use

Application and media
The measuring device described in these Brief Operating Instructions is intended only for flow measurement of liquids and gases.

Depending on the version ordered, the measuring device can also measure potentially explosive, flammable, poisonous and oxidizing media.

Measuring devices for use in hazardous areas, in hygienic applications or where there is an increased risk due to process pressure, are labeled accordingly on the nameplate.

To ensure that the measuring device remains in proper condition for the operation time:
- Only use the measuring device in full compliance with the data on the nameplate and the general conditions listed in the Operating Instructions and supplementary documentation.
- Based on the nameplate, check whether the ordered device is permitted for the intended use in the hazardous area (e.g. explosion protection, pressure vessel safety).
- Use the measuring device only for media to which the process-wetted materials are sufficiently resistant.
- If the measuring device is not operated at atmospheric temperature, compliance with the relevant basic conditions specified in the associated device documentation is absolutely essential: "Documentation" section.→ 📄 8.
- Protect the measuring device permanently against corrosion from environmental influences.

Incorrect use
Non-designated use can compromise safety. The manufacturer is not liable for damage caused by improper or non-designated use.

⚠ WARNING
Danger of breakage due to corrosive or abrasive fluids!
- Verify the compatibility of the process fluid with the sensor material.
- Ensure the resistance of all fluid-wetted materials in the process.
- Keep within the specified pressure and temperature range.

NOTICE

Verification for borderline cases:

- For special fluids and fluids for cleaning, Endress+Hauser is glad to provide assistance in verifying the corrosion resistance of fluid-wetted materials, but does not accept any warranty or liability as minute changes in the temperature, concentration or level of contamination in the process can alter the corrosion resistance properties.

Residual risks

WARNING

The electronics and the medium may cause the surfaces to heat up. This presents a burn hazard!

- For elevated fluid temperatures, ensure protection against contact to prevent burns.

2.3 Workplace safety

For work on and with the device:

- Wear the required personal protective equipment according to federal/national regulations.

For welding work on the piping:

- Do not ground the welding unit via the measuring device.

If working on and with the device with wet hands:

- Due to the increased risk of electric shock, gloves must be worn.

2.4 Operational safety

Risk of injury.

- Operate the device in proper technical condition and fail-safe condition only.
- The operator is responsible for interference-free operation of the device.

Conversions to the device

Unauthorized modifications to the device are not permitted and can lead to unforeseeable dangers.

- If, despite this, modifications are required, consult with Endress+Hauser.

Repair

To ensure continued operational safety and reliability,

- Carry out repairs on the device only if they are expressly permitted.
- Observe federal/national regulations pertaining to repair of an electrical device.
- Use original spare parts and accessories from Endress+Hauser only.

2.5 Product safety

This measuring device is designed in accordance with good engineering practice to meet state-of-the-art safety requirements, has been tested, and left the factory in a condition in which it is safe to operate.

It meets general safety standards and legal requirements. It also complies with the EU directives listed in the device-specific EU Declaration of Conformity. Endress+Hauser confirms this by affixing the CE mark to the device.

2.6 IT security

We only provide a warranty if the device is installed and used as described in the Operating Instructions. The device is equipped with security mechanisms to protect it against any inadvertent changes to the device settings.

IT security measures in line with operators' security standards and designed to provide additional protection for the device and device data transfer must be implemented by the operators themselves.

2.7 Device-specific IT security

The device offers a range of specific functions to support protective measures on the operator's side. These functions can be configured by the user and guarantee greater in-operation safety if used correctly. An overview of the most important functions is provided in the following section.

2.7.1 Protecting access via hardware write protection

Write access to the device parameters via the local display, Web browser or operating tool (e.g. FieldCare, DeviceCare) can be disabled via a write protection switch (DIP switch on the motherboard). When hardware write protection is enabled, only read access to the parameters is possible.

Hardware write protection is disabled when the device is delivered → 🗎 137.

2.7.2 Protecting access via a password

Different passwords are available to protect write access to the device parameters or access to the device via the WLAN interface.

- User-specific access code
  Protect write access to the device parameters via the local display, Web browser or operating tool (e.g. FieldCare, DeviceCare). Is equivalent to hardware write protection in terms of functionality.
- WLAN passphrase
  The network key protects a connection between an operating unit (e.g. notebook or tablet) and the device via the WLAN interface which can be ordered as an option.

User-specific access code

Write access to the device parameters via the local display, Web browser or operating tool (e.g. FieldCare, DeviceCare) can be protected by the modifiable, user-specific access code (→ 🗎 136).

When the device is delivered, the device does not have an access code and is equivalent to *0000* (open).

WLAN passphrase

A connection between an operating unit (e.g. notebook or tablet) and the device via the WLAN interface (→ 🗎 81) which can be ordered as an option is protected by the network key. The WLAN authentication of the network key complies with the IEEE 802.11 standard.

When the device is delivered, the network key is pre-defined depending on the device. It can be changed via the **WLAN settings** submenu in the **WLAN passphrase** parameter (→ 🗎 129).

General notes on the use of passwords

- The access code and network key supplied with the device should be changed during commissioning.
- Follow the general rules for generating a secure password when defining and managing the access code or network key.
- The user is responsible for the management and careful handling of the access code and network key.
- For information on configuring the access code or on what to do if you lose the password, see the "Write protection via access code" section → 136

2.7.3 Access via fieldbus

When communicating via fieldbus, access to the device parameters can be restricted to *"Read only"* access. The option can be changed in the **Fieldbus writing access** parameter.

This does not affect cyclic measured value transmission to the higher-order system, which is always guaranteed.

For detailed information, see the "Description of Device Parameters" document pertaining to the device → 227

2.7.4 Access via Web server

The device can be operated and configured via a Web browser with the integrated Web server (). The connection is via the service interface (CDI-RJ45) or the WLAN interface.

The Web server is enabled when the device is delivered. The Web server can be disabled if necessary (e.g. after commissioning) via the **Web server functionality** parameter.

The device and status information can be hidden on the login page. This prevents unauthorized access to the information.

For detailed information, see the "Description of Device Parameters" document pertaining to the device → 227

3 Product description

The measuring system consists of a transmitter and a sensor. The transmitter and sensor are mounted in physically separate locations. They are interconnected by one connecting cable(s).

3.1 Product design

Two versions of the transmitter are available.

3.1.1 Proline 500 – digital

Signal transmission: digital
Order code for "Integrated ISEM electronics", option **A** "Sensor"

For use in applications not required to meet special requirements due to ambient or operating conditions.

As the electronics are located in the sensor, the device is ideal:
For simple transmitter replacement.

- A standard cable can be used as the connecting cable.
- Not sensitive to external EMC interference.

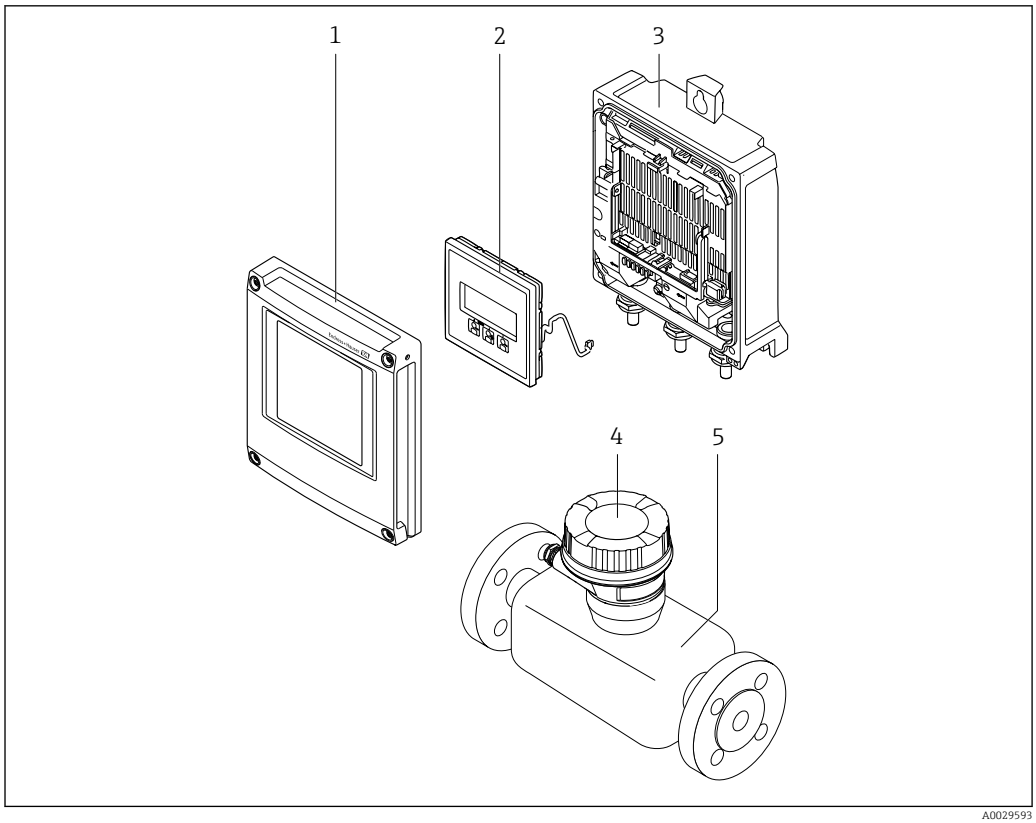

1 Important components of a measuring device

1 Electronics compartment cover
2 Display module
3 Transmitter housing
4 Sensor connection housing with integrated ISEM electronics: connecting cable connection
5 Sensor

3.1.2 Proline 500

Signal transmission: analog
Order code for "Integrated ISEM electronics", option **B** "Transmitter"

For use in applications required to meet special requirements due to ambient or operating conditions.

As the electronics are located in the transmitter, the device is ideal in the event of:
- Strong vibrations at the sensor.
- Sensor operation in underground installations.
- Permanent sensor immersion in water.

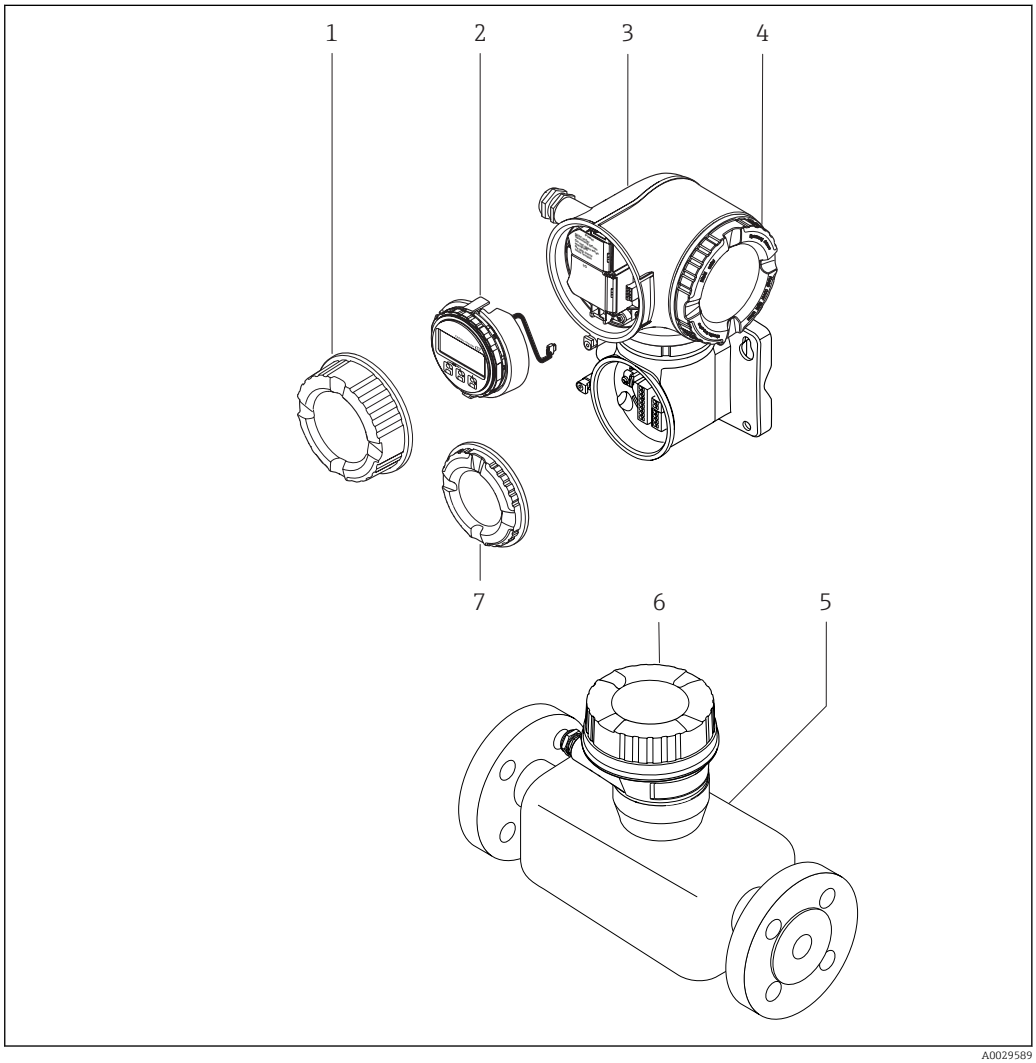

2 Important components of a measuring device

1 Connection compartment cover
2 Display module
3 Transmitter housing with integrated ISEM electronics
4 Electronics compartment cover
5 Sensor
6 Sensor connection housing: connecting cable connection
7 Connection compartment cover: connecting cable connection

4 Incoming acceptance and product identification

4.1 Incoming acceptance

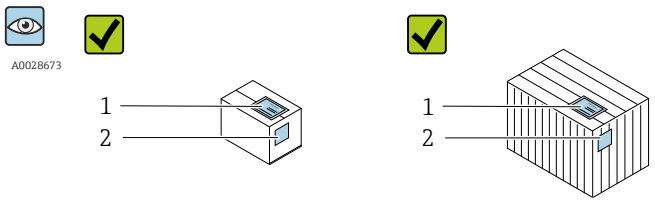

Are the order codes on the delivery note (1) and the product sticker (2) identical?

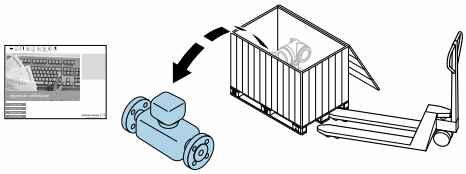

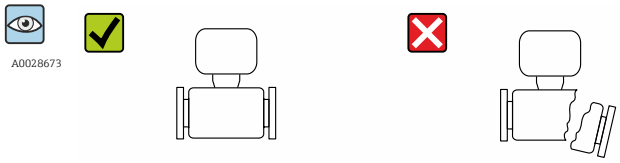

Are the goods undamaged?

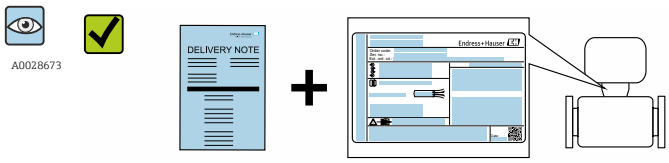

Do the nameplate data match the ordering information on the delivery note?

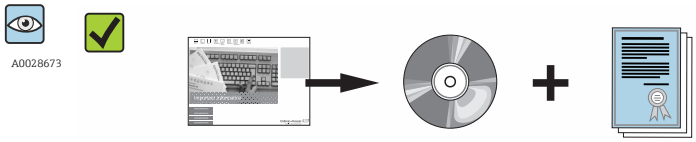

Is the CD-ROM with the Technical Documentation (depends on device version) and documents present?

- If one of the conditions is not satisfied, contact your Endress+Hauser Sales Center.
- Depending on the device version, the CD-ROM might not be part of the delivery! The Technical Documentation is available via the Internet or via the *Endress+Hauser Operations App*, see the "Product identification" section → 17.

4.2 Product identification

The following options are available for identification of the measuring device:
- Nameplate specifications
- Order code with breakdown of the device features on the delivery note
- Enter serial numbers from nameplates in *W@M Device Viewer* (www.endress.com/deviceviewer): All information about the measuring device is displayed.
- Enter the serial number from the nameplates into the *Endress+Hauser Operations App* or scan the 2-D matrix code (QR code) on the nameplate with the *Endress+Hauser Operations App*: all the information for the measuring device is displayed.

For an overview of the scope of the associated Technical Documentation, refer to the following:
- The chapters "Additional standard documentation on the device" → 📄 8 and "Supplementary device-dependent documentation" → 📄 8
- The *W@M Device Viewer*: Enter the serial number from the nameplate (www.endress.com/deviceviewer)
- The *Endress+Hauser Operations App*: Enter the serial number from the nameplate or scan the 2-D matrix code (QR code) on the nameplate.

4.2.1 Transmitter nameplate

Proline 500 – digital

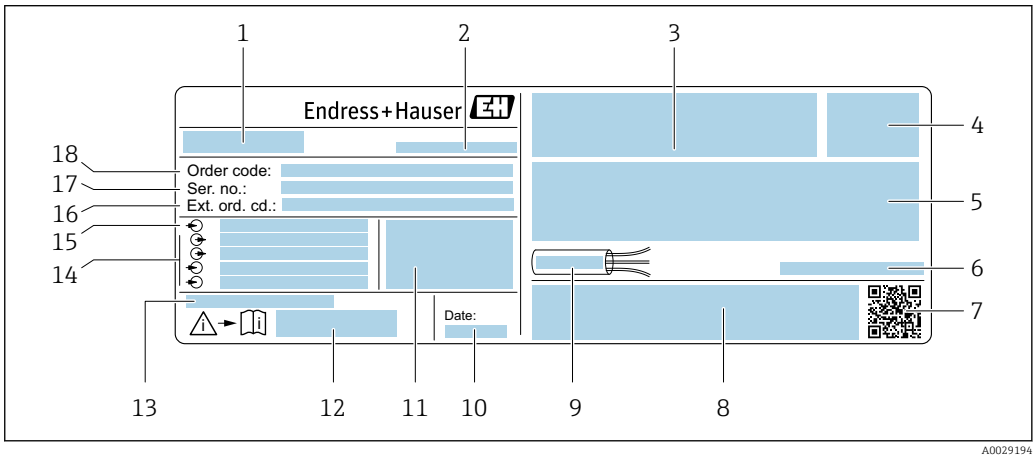

3 Example of a transmitter nameplate

1 *Name of the transmitter*
2 *Manufacturing location*
3 *Space for approvals: use in hazardous areas*
4 *Degree of protection*
5 *Electrical connection data: available inputs and outputs*
6 *Permitted ambient temperature (T_a)*
7 *2-D matrix code*
8 *Space for approvals and certificates: e.g. CE mark, C-Tick*
9 *Permitted temperature range for cable*
10 *Manufacturing date: year-month*
11 *Firmware version (FW) and device revision (Dev.Rev.) from the factory*
12 *Document number of safety-related supplementary documentation*
13 *Space for additional information in the case of special products*
14 *Available inputs and outputs, supply voltage*
15 *Electrical connection data: supply voltage*
16 *Extended order code (Ext. ord. cd.)*
17 *Serial number (ser. no.)*
18 *Order code*

Proline 500

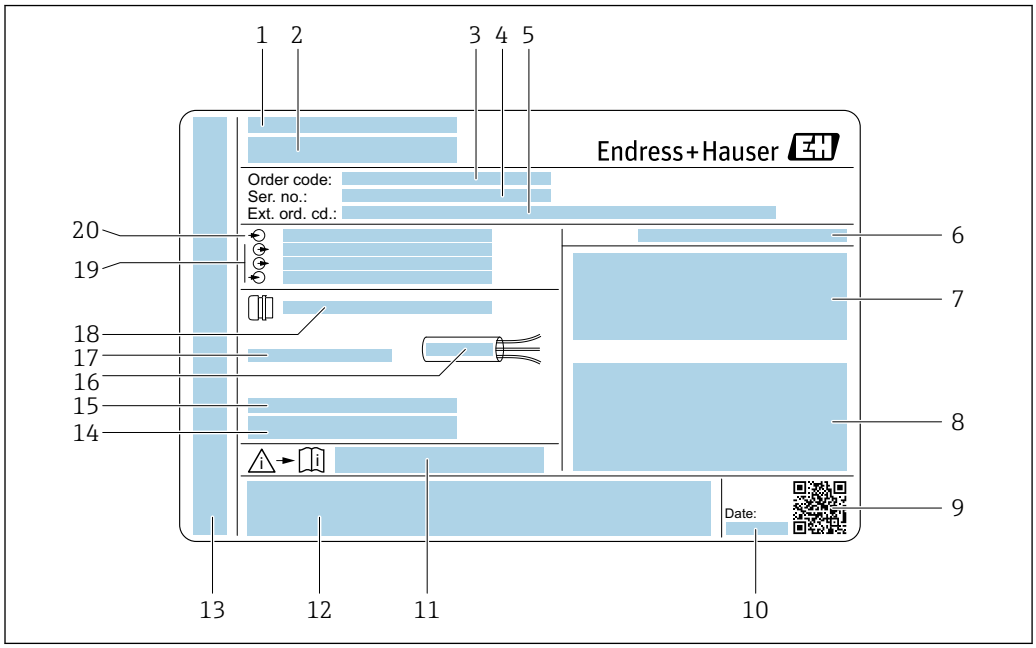

4 *Example of a transmitter nameplate*

1 *Manufacturing location*
2 *Name of the transmitter*
3 *Order code*
4 *Serial number (ser. no.)*
5 *Extended order code (Ext. ord. cd.)*
6 *Degree of protection*
7 *Space for approvals: use in hazardous areas*
8 *Electrical connection data: available inputs and outputs*
9 *2-D matrix code*
10 *Manufacturing date: year-month*
11 *Document number of safety-related supplementary documentation*
12 *Space for approvals and certificates: e.g. CE mark, C-Tick*
13 *Space for degree of protection of connection and electronics compartment when used in hazardous areas*
14 *Firmware version (FW) and device revision (Dev.Rev.) from the factory*
15 *Space for additional information in the case of special products*
16 *Permitted temperature range for cable*
17 *Permitted ambient temperature (T_a)*
18 *Information on cable gland*
19 *Available inputs and outputs, supply voltage*
20 *Electrical connection data: supply voltage*

4.2.2 Sensor nameplate

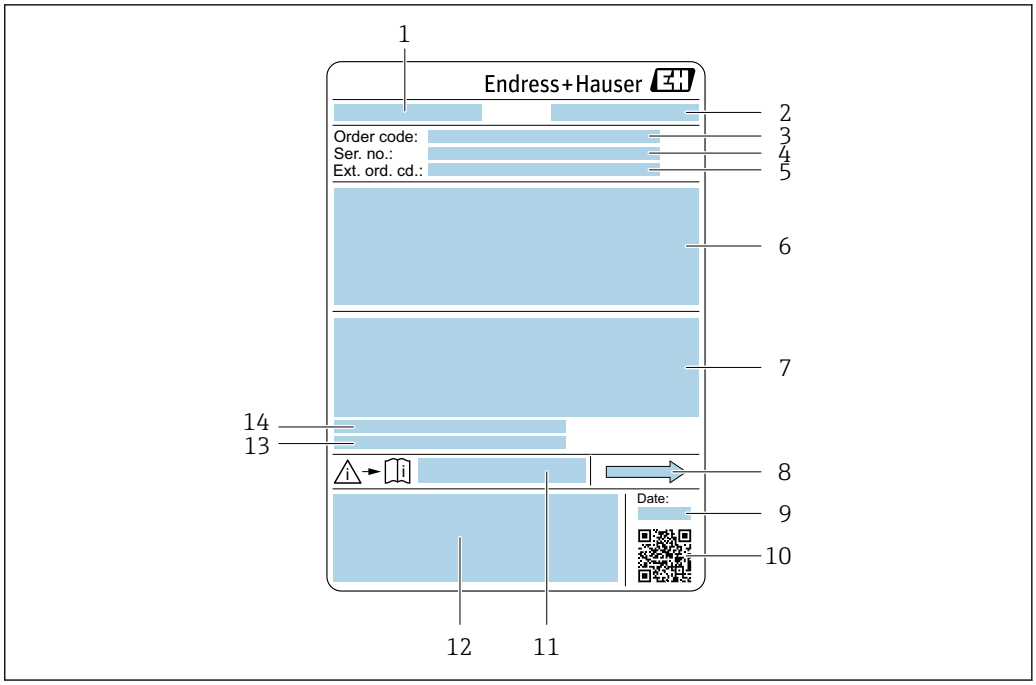

5 *Example of a sensor nameplate*

1 *Name of the sensor*
2 *Manufacturing location*
3 *Order code*
4 *Serial number (ser. no.)*
5 *Extended order code (Ext. ord. cd.)*
6 *Nominal diameter of the sensor; flange nominal diameter/nominal pressure; sensor test pressure; medium temperature range; material of measuring tube and manifold; sensor-specific information: e.g. pressure range of secondary containment, wide-range density specification (special density calibration)*
7 *Approval information for explosion protection, Pressure Equipment Directive and degree of protection*
8 *Flow direction*
9 *Manufacturing date: year-month*
10 *2-D matrix code*
11 *Document number of safety-related supplementary documentation*
12 *CE mark, C-Tick*
13 *Surface roughness*
14 *Permitted ambient temperature (T_a)*

Order code
The measuring device is reordered using the order code.

Extended order code
- The device type (product root) and basic specifications (mandatory features) are always listed.
- Of the optional specifications (optional features), only the safety and approval-related specifications are listed (e.g. LA). If other optional specifications are also ordered, these are indicated collectively using the # placeholder symbol (e.g. #LA#).
- If the ordered optional specifications do not include any safety and approval-related specifications, they are indicated by the + placeholder symbol (e.g. XXXXXX-ABCDE +).

4.2.3 Symbols on measuring device

Symbol	Meaning
⚠	**WARNING!** This symbol alerts you to a dangerous situation. Failure to avoid this situation can result in serious or fatal injury.
📖	**Reference to documentation** Refers to the corresponding device documentation.
⏚	**Protective ground connection** A terminal which must be connected to ground prior to establishing any other connections.

5 Storage and transport

5.1 Storage conditions

Observe the following notes for storage:
- Store in the original packaging to ensure protection from shock.
- Do not remove protective covers or protective caps installed on process connections. They prevent mechanical damage to the sealing surfaces and contamination in the measuring tube.
- Protect from direct sunlight to avoid unacceptably high surface temperatures.
- Store in a dry and dust-free place.
- Do not store outdoors.

Storage temperature→ 213

5.2 Transporting the product

Transport the measuring device to the measuring point in the original packaging.

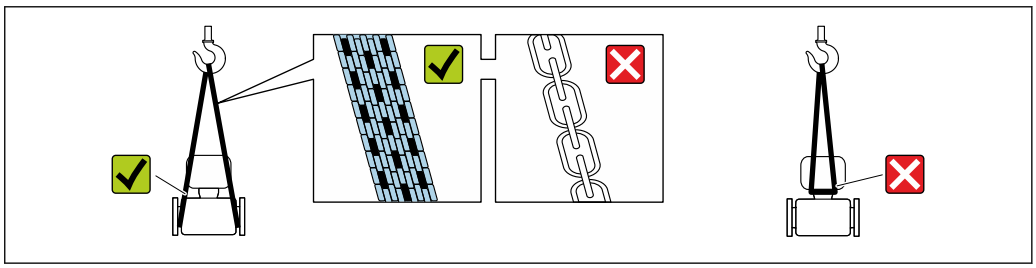

A0029252

Do not remove protective covers or caps installed on process connections. They prevent mechanical damage to the sealing surfaces and contamination in the measuring tube.

5.2.1 Measuring devices without lifting lugs

WARNING

Center of gravity of the measuring device is higher than the suspension points of the webbing slings.

Risk of injury if the measuring device slips.
- ▶ Secure the measuring device against slipping or turning.
- ▶ Observe the weight specified on the packaging (stick-on label).

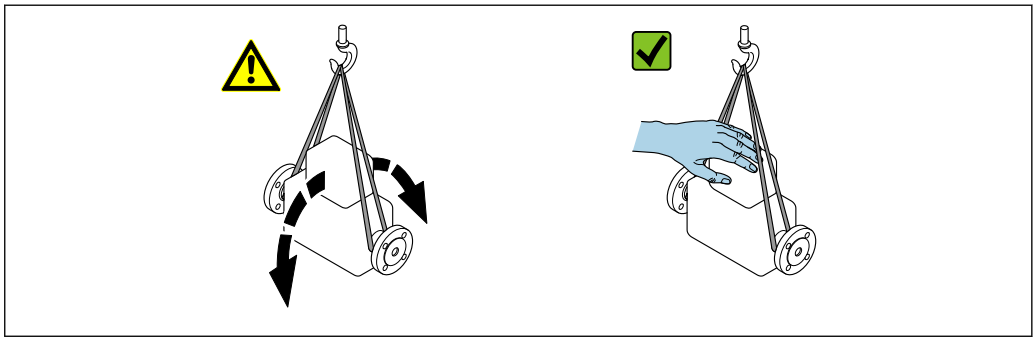

A0029214

5.2.2 Measuring devices with lifting lugs

⚠ CAUTION

Special transportation instructions for devices with lifting lugs

- ▶ Only use the lifting lugs fitted on the device or flanges to transport the device.
- ▶ The device must always be secured at two lifting lugs at least.

5.2.3 Transporting with a fork lift

If transporting in wood crates, the floor structure enables the crates to be lifted lengthwise or at both sides using a forklift.

5.3 Packaging disposal

All packaging materials are environmentally friendly and 100% recyclable:

- Measuring device secondary packaging: polymer stretch film that conforms to EC Directive 2002/95/EC (RoHS).
- Packaging:
  - Wood crate, treated in accordance with ISPM 15 standard, which is confirmed by the affixed IPPC logo.
    or
  - Carton in accordance with European Packaging Directive 94/62EC; recyclability is confirmed by the affixed RESY symbol.
- Seaworthy packaging (optional): Wood crate, treated in accordance with ISPM 15 standard, which is confirmed by the affixed IPPC logo.
- Carrying and mounting hardware:
  - Disposable plastic pallet
  - Plastic straps
  - Plastic adhesive strips
- Dunnage: Paper cushion

6 Installation

6.1 Installation conditions

No special measures such as supports are necessary. External forces are absorbed by the construction of the device.

6.1.1 Mounting position

Mounting location

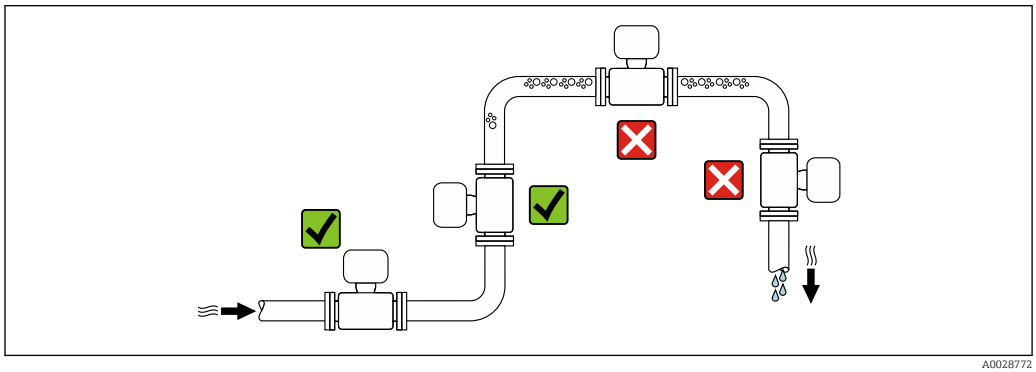

A0028772

To prevent measuring errors arising from accumulation of gas bubbles in the measuring tube, avoid the following mounting locations in the pipe:
- Highest point of a pipeline.
- Directly upstream of a free pipe outlet in a down pipe.

Installation in down pipes

However, the following installation suggestion allows for installation in an open vertical pipeline. Pipe restrictions or the use of an orifice with a smaller cross-section than the nominal diameter prevent the sensor running empty while measurement is in progress.

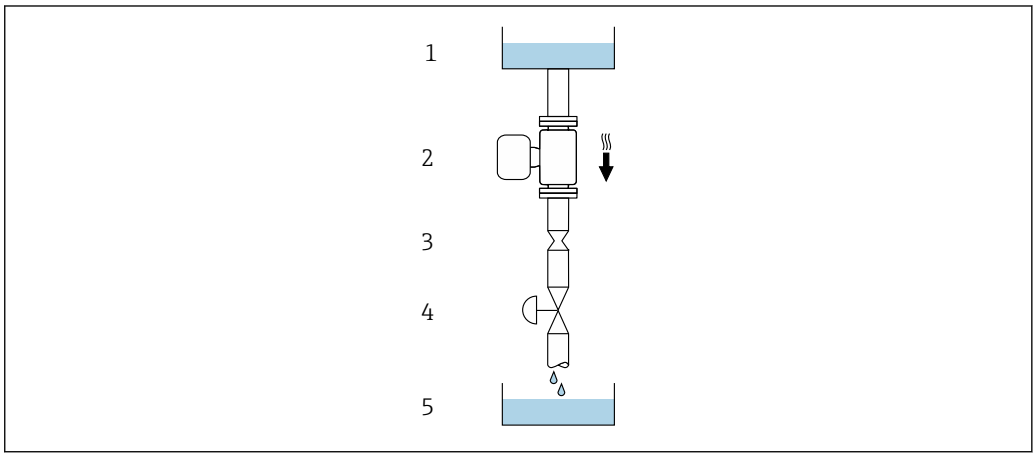

6 *Installation in a down pipe (e.g. for batching applications)*

1 Supply tank
2 Sensor
3 Orifice plate, pipe restriction
4 Valve
5 Batching tank

DN		Ø orifice plate, pipe restriction	
[mm]	[in]	[mm]	[in]
8	⅜	6	0.24
15	½	10	0.40
25	1	14	0.55
40	1½	22	0.87
50	2	28	1.10

Orientation

The direction of the arrow on the sensor nameplate helps you to install the sensor according to the flow direction (direction of medium flow through the piping).

Orientation			Recommendation
A	Vertical orientation	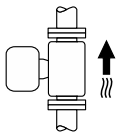 A0015591	✓✓
B	Horizontal orientation, transmitter at top	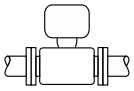 A0015589	✓✓ [1] Exceptions: → 7, 24

Orientation			Recommendation
C	Horizontal orientation, transmitter at bottom	A0015590	✓✓ 2) Exceptions: → 7, 24
D	Horizontal orientation, transmitter at side	A0015592	✓✓

1) Applications with low process temperatures may decrease the ambient temperature. To maintain the minimum ambient temperature for the transmitter, this orientation is recommended.
2) Applications with high process temperatures may increase the ambient temperature. To maintain the maximum ambient temperature for the transmitter, this orientation is recommended.

If a sensor is installed horizontally with a curved measuring tube, match the position of the sensor to the fluid properties.

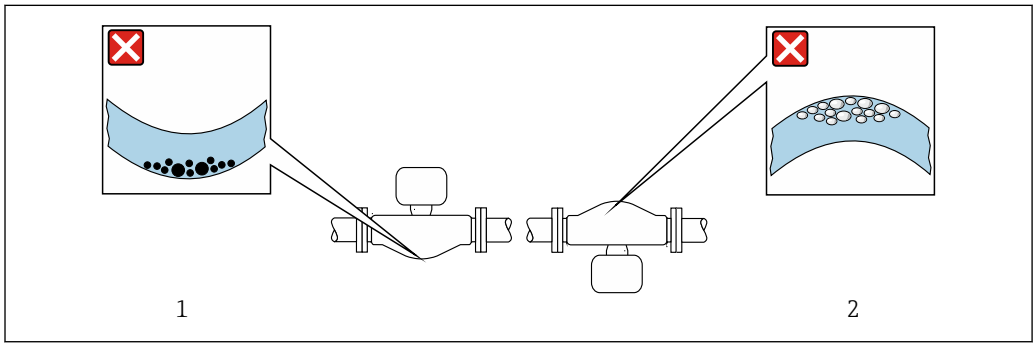

7 *Orientation of sensor with curved measuring tube*

1 Avoid this orientation for fluids with entrained solids: Risk of solids accumulating.
2 Avoid this orientation for outgassing fluids: Risk of gas accumulating.

Inlet and outlet runs

No special precautions need to be taken for fittings which create turbulence, such as valves, elbows or T-pieces, as long as no cavitation occurs → 25.

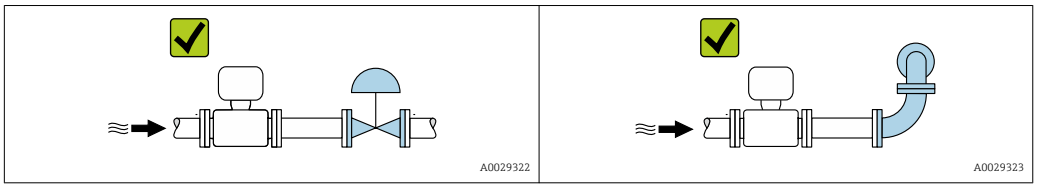

Installation dimensions

For the dimensions and installation lengths of the device, see the "Technical Information" document, "Mechanical construction" section.

6.1.2 Requirements from environment and process

Ambient temperature range

For detailed information on the ambient temperature range, see the Operating Instructions for the device.

If operating outdoors:
- Install the measuring device in a shady location.
- Avoid direct sunlight, particularly in warm climatic regions.
- Avoid direct exposure to weather conditions.

Temperature tables

For detailed information on the temperature tables, see the separate document entitled "Safety Instructions" (XA) for the device.

System pressure

It is important that cavitation does not occur, or that gases entrained in the liquids do not outgas.

Cavitation is caused if the pressure drops below the vapor pressure:
- In liquids that have a low boiling point (e.g. hydrocarbons, solvents, liquefied gases)
- In suction lines

▶ Ensure the system pressure is sufficiently high to prevent cavitation and outgassing.

For this reason, the following mounting locations are recommended:
- At the lowest point in a vertical pipe
- Downstream from pumps (no danger of vacuum)

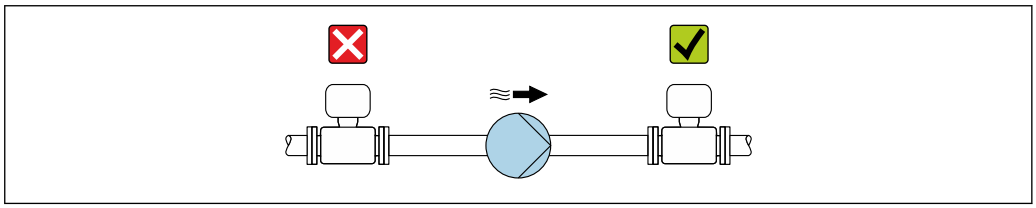

A0028777

Thermal insulation

In the case of some fluids, it is important that the heat radiated from the sensor to the transmitter is kept to a minimum. A wide range of materials can be used for the required insulation.

NOTICE

Electronics overheating on account of thermal insulation!

▶ Observe maximum permitted insulation height of the transmitter neck so that the transmitter head is completely free.

NOTICE

Danger of overheating with insulation

▶ Ensure that the temperature at the lower end of the sensor housing does not exceed 80 °C (176 °F)

NOTICE

The insulation can also be thicker than the maximum recommended insulation thickness.

Prerequisite:

▶ Ensure that convection takes place on a sufficiently large scale at the transmitter neck.

▶ Ensure that a sufficiently large area of the housing support remains exposed. The uncovered part serves as a radiator and protects the electronics from overheating and excessive cooling.

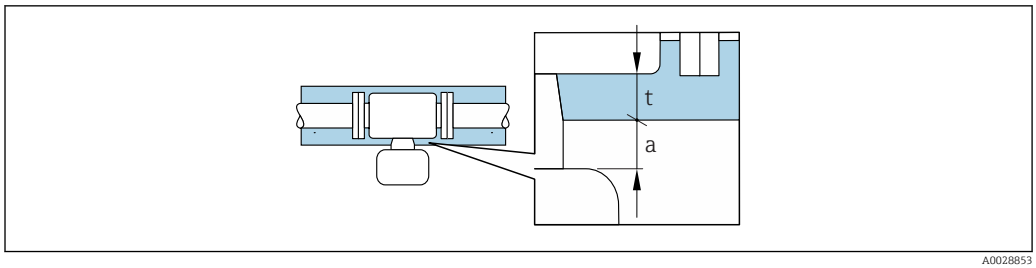

t *Maximum insulation thickness*
a *Minimum distance to insulation*

The minimum distance a between the sensor connection housing and the insulation is 10 mm (0.39 in). This is to ensure that the sensor connection housing remains completely exposed.

Maximum recommended insulation thickness for the extended temperature range or insulation

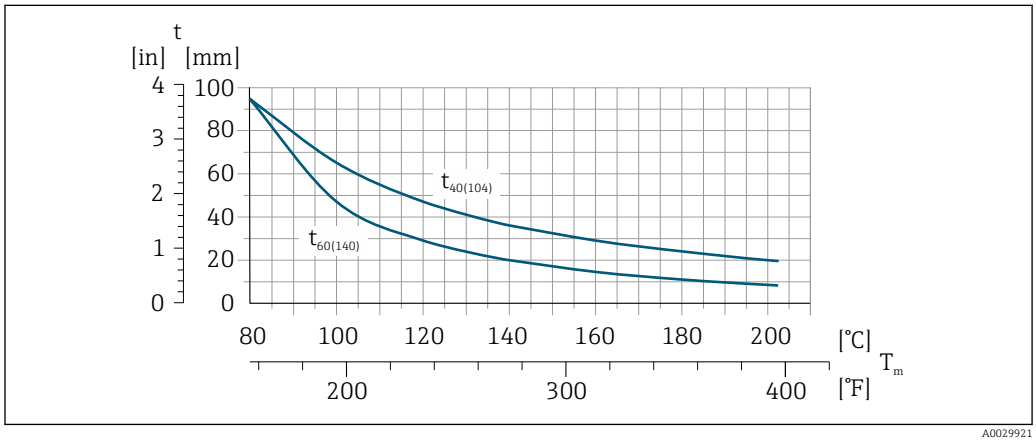

8 Maximum recommended insulation thickness (t) depending on the temperature of the medium (T) and the ambient temperature (T_a)

t *Insulation thickness*
T *Medium temperature*
t40 *$t_{40(104)}$ = Maximum recommended insulation thickness at T_a = 40 °C (104 °F)*
t60 *$t_{60(140)}$ = Maximum recommended insulation thickness at T_a = 60 °C (140 °F)*

Heating

NOTICE

Electronics can overheat due to elevated ambient temperature!

- Observe maximum permitted ambient temperature for the transmitter .
- Depending on the fluid temperature, take the device orientation requirements into account .

NOTICE

Danger of overheating when heating

- Ensure that the temperature at the lower end of the transmitter housing does not exceed 80 °C (176 °F).
- Ensure that convection takes place on a sufficiently large scale at the transmitter neck.
- Ensure that a sufficiently large area of the housing support remains exposed. The uncovered part serves as a radiator and protects the electronics from overheating and excessive cooling.

Heating options

If a fluid requires that no heat loss should occur at the sensor, users can avail of the following heating options:
- Electrical heating, e.g. with electric band heaters
- Via pipes carrying hot water or steam
- Via heating jackets

Using an electrical trace heating system

If heating is regulated via phase angle control or pulse packages, magnetic fields can affect the measured values (= for values that are greater than the values permitted by the EN standard (sine 30 A/m)).

For this reason, the sensor must be magnetically shielded: the housing can be shielded with tin plates or electric sheets without a privileged direction (e.g. V330-35A).

The sheet must have the following properties:
- Relative magnetic permeability μr ≥ 300
- Plate thickness d ≥ 0.35 mm (d ≥ 0.014 in)

Vibrations

The high oscillation frequency of the measuring tubes ensures that the correct operation of the measuring system is not influenced by plant vibrations.

6.1.3 Special mounting instructions

Zero point adjustment

All measuring devices are calibrated in accordance with state-of-the-art technology. Calibration takes place under reference conditions→ 📖 209. Therefore, a zero point adjustment in the field is generally not required.

Experience shows that zero point adjustment is advisable only in special cases:
- To achieve maximum measuring accuracy even with low flow rates.
- Under extreme process or operating conditions (e.g. very high process temperatures or very high-viscosity fluids).

Protective cover

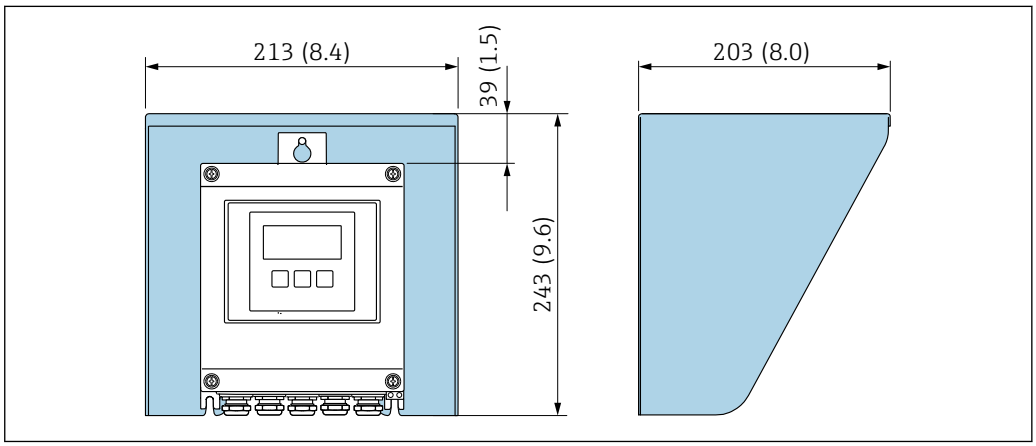

9 Weather protection cover for Proline 500 – digital

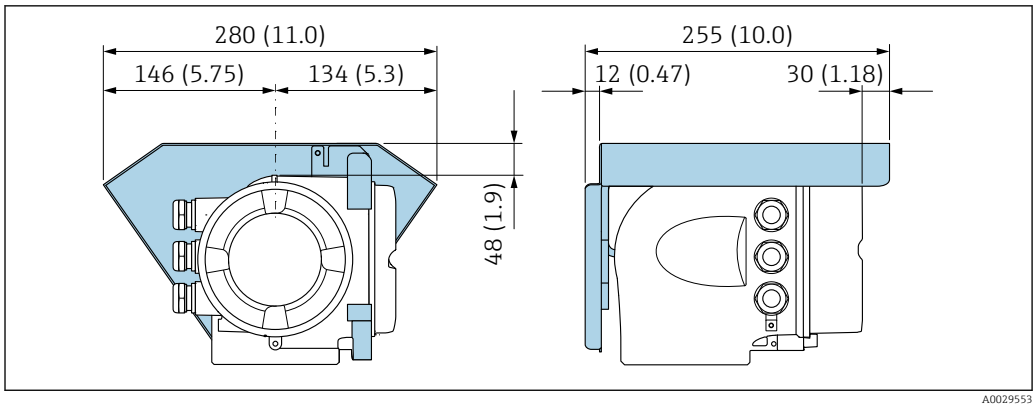

10 *Weather protection cover for Proline 500*

Cover locking: Proline 500

NOTICE

Order code "Transmitter housing", option L "Cast, stainless": The covers of the transmitter housing are provided with a borehole to lock the cover.

The cover can be locked using screws and a chain or cable provided by the customer.

- ▶ It is recommended to use stainless steel cables or chains.
- ▶ If a protective coating is applied, it is recommended to use a heat shrink tube to protect the housing paint.

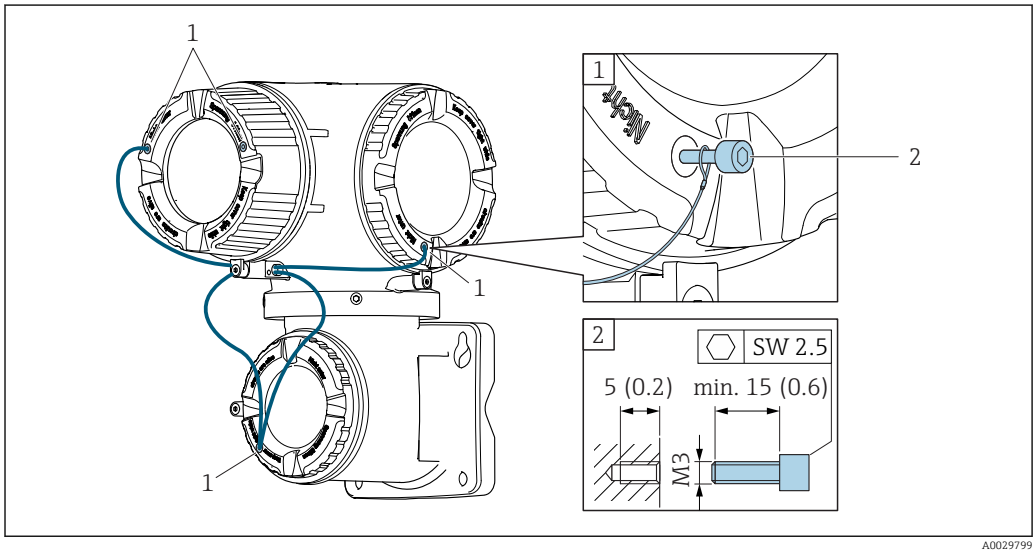

1 *Cover borehole for the securing screw*
2 *Securing screw to lock the cover*

6.2 Mounting the measuring device

6.2.1 Required tools

For transmitter

For mounting on a post:

- Proline 500 – digital transmitter
  - Open-ended wrench AF 10
  - Torx screwdriver TX 25
- Proline 500 transmitter
  Open-ended wrench AF 13

For wall mounting:
Drill with drill bit Ø 6.0 mm

For sensor

For flanges and other process connections: Corresponding mounting tools

6.2.2 Preparing the measuring device

1. Remove all remaining transport packaging.
2. Remove any protective covers or protective caps present from the sensor.
3. Remove stick-on label on the electronics compartment cover.

6.2.3 Mounting the measuring device

⚠ WARNING

Danger due to improper process sealing!

- ▶ Ensure that the inside diameters of the gaskets are greater than or equal to that of the process connections and piping.
- ▶ Ensure that the gaskets are clean and undamaged.
- ▶ Install the gaskets correctly.

1. Ensure that the direction of the arrow on the nameplate of the sensor matches the flow direction of the fluid.
2. Install the measuring device or turn the transmitter housing so that the cable entries do not point upwards.

↳

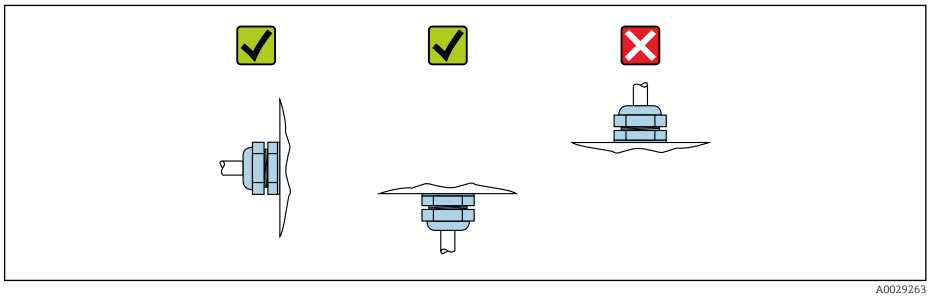

A0029263

6.2.4 Mounting the transmitter housing: Proline 500 – digital

⚠ CAUTION

Ambient temperature too high!

Danger of electronics overheating and housing deformation.

- ▶ Do not exceed the permitted maximum ambient temperature .
- ▶ If operating outdoors: Avoid direct sunlight and exposure to weathering, particularly in warm climatic regions.

⚠ CAUTION

Excessive force can damage the housing!

- ▶ Avoid excessive mechanical stress.

The transmitter can be mounted in the following ways:

- Post mounting
- Wall mounting

Post mounting

WARNING

Excessive tightening torque applied to the fixing screws!
Risk of damaging the plastic transmitter.
▶ Tighten the fixing screws as per the tightening torque: 2 Nm (1.5 lbf ft)

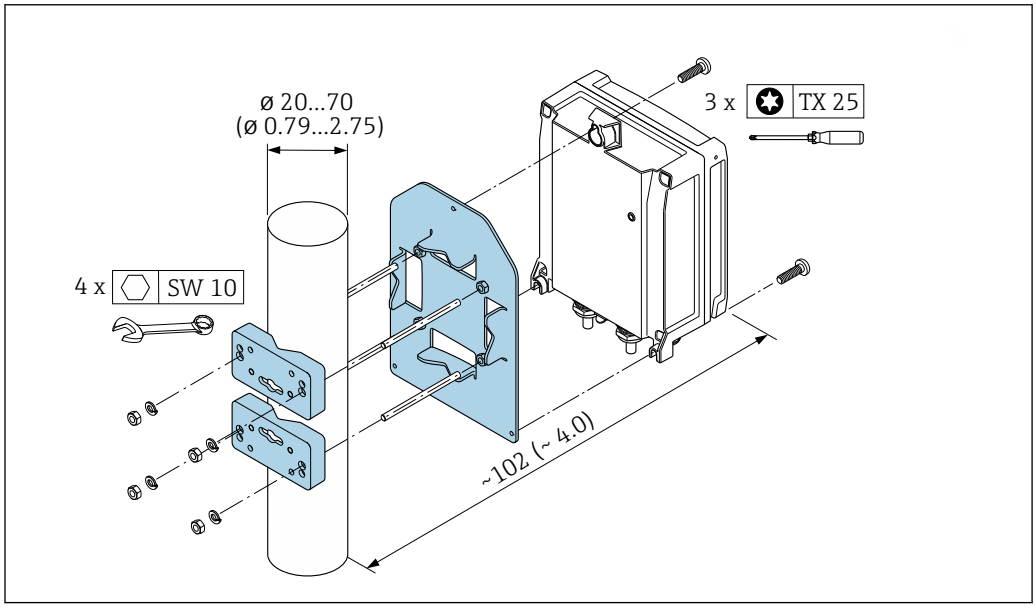

11 *Engineering unit mm (in)*

Wall mounting

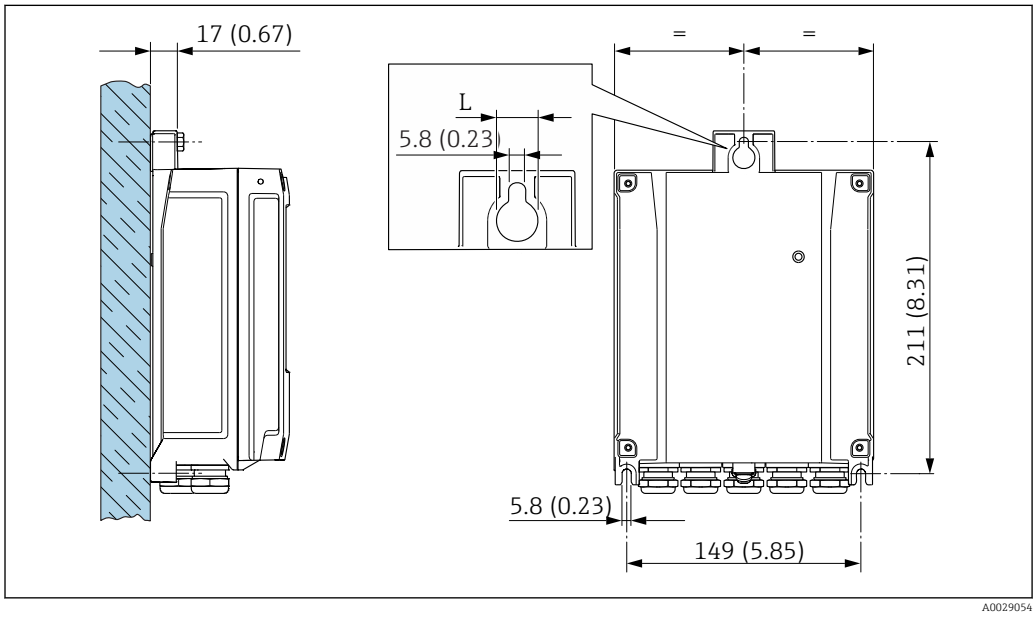

12 *Engineering unit mm (in)*

L Depends on order code for "Transmitter housing"

Order code for "Transmitter housing"
- Option **A**, aluminum coated: L =14 mm (0.55 in)
- Option **D**, polycarbonate: L = 13 mm (0.51 in)

1. Drill the holes.

2. Insert wall plugs into the drilled holes.
3. Screw in the securing screws slightly at first.
4. Fit the transmitter housing over the securing screws and mount in place.
5. Tighten the securing screws.

6.2.5 Mounting the transmitter housing: Proline 500

⚠ CAUTION

Ambient temperature too high!

Danger of electronics overheating and housing deformation.

- ▶ Do not exceed the permitted maximum ambient temperature .
- ▶ If operating outdoors: Avoid direct sunlight and exposure to weathering, particularly in warm climatic regions.

⚠ CAUTION

Excessive force can damage the housing!

- ▶ Avoid excessive mechanical stress.

The transmitter can be mounted in the following ways:

- Post mounting
- Wall mounting

Wall mounting

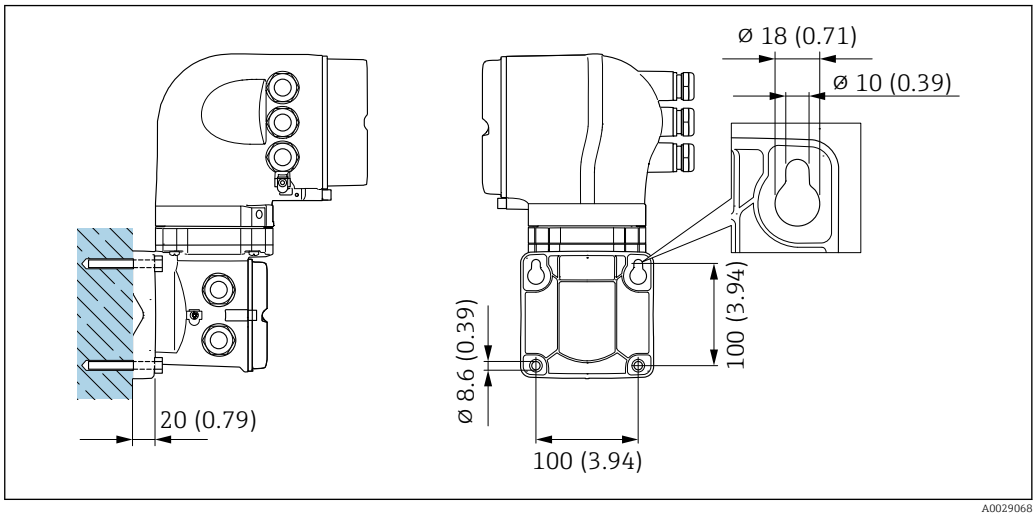

13 Engineering unit mm (in)

1. Drill the holes.
2. Insert wall plugs into the drilled holes.
3. Screw in the securing screws slightly at first.
4. Fit the transmitter housing over the securing screws and mount in place.
5. Tighten the securing screws.

Post mounting

⚠ WARNING

Order code for "Transmitter housing", option L "Cast, stainless": cast transmitters are very heavy.

They are unstable if they are not mounted on a secure, fixed post.

▶ Only mount the transmitter on a secure, fixed post on a stable surface.

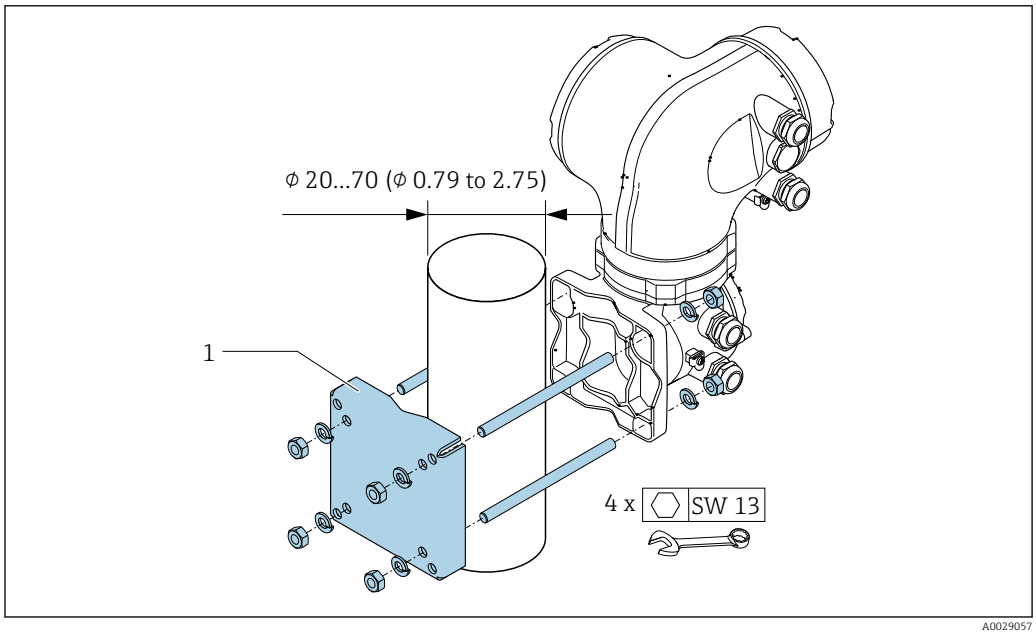

14 *Engineering unit mm (in)*

6.2.6 Turning the transmitter housing: Proline 500

To provide easier access to the connection compartment or display module, the transmitter housing can be turned.

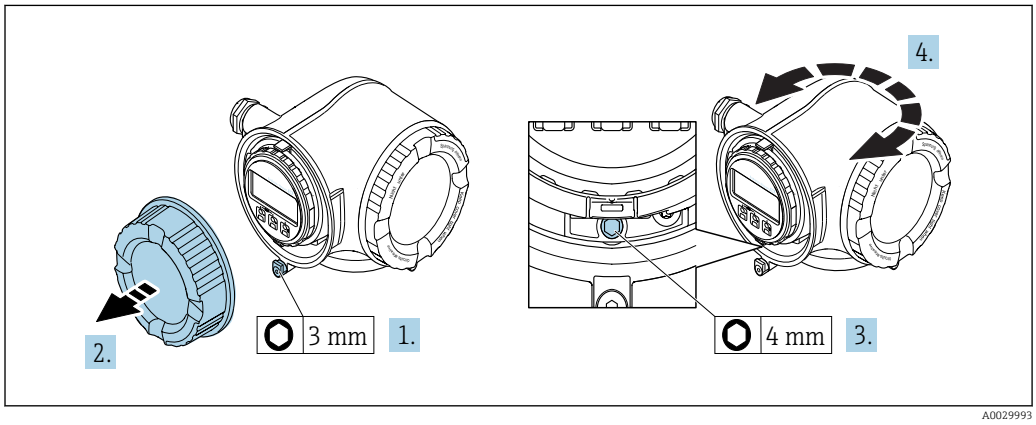

1. Loosen the securing clamp of the connection compartment cover.
2. Unscrew the connection compartment cover.
3. Release the fixing screw.
4. Turn the housing to the desired position.
5. Firmly tighten the securing screw.
6. Screw on the connection compartment cover
7. Fit the securing clamp of the connection compartment cover.

6.2.7 Turning the display module: Proline 500

The display module can be turned to optimize display readability and operability.

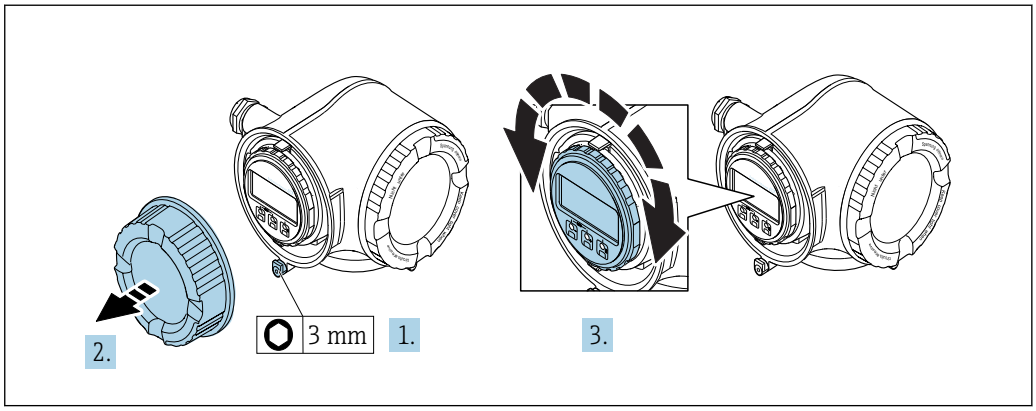

A0030035

1. Loosen the securing clamp of the connection compartment cover.
2. Unscrew the connection compartment cover.
3. Turn the display module to the desired position: max. 8 × 45° in every direction.
4. Screw on the connection compartment cover.
5. Fit the securing clamp of the connection compartment cover.

6.3 Post-installation check

Is the device undamaged (visual inspection)?	❑
Does the measuring device conform to the measuring point specifications? For example: ▪ Process temperature → 🗎 214 ▪ Process pressure (refer to the section on "Pressure-temperature ratings" in the "Technical Information" document) ▪ Ambient temperature ▪ Measuring range	❑
Has the correct orientation for the sensor been selected ? ▪ According to sensor type ▪ According to medium temperature ▪ According to medium properties (outgassing, with entrained solids)	❑
Does the arrow on the sensor nameplate match the direction of flow of the fluid through the piping → 🗎 23?	❑
Are the measuring point identification and labeling correct (visual inspection)?	❑
Is the device adequately protected from precipitation and direct sunlight?	❑
Are the securing screw and securing clamp tightened securely?	❑

7 Electrical connection

NOTICE

The measuring device does not have an internal circuit breaker.

- ▶ For this reason, assign the measuring device a switch or power-circuit breaker so that the power supply line can be easily disconnected from the mains.
- ▶ Although the measuring device is equipped with a fuse, additional overcurrent protection (maximum 10 A) should be integrated into the system installation.

7.1 Connection conditions

7.1.1 Required tools

- For cable entries: Use corresponding tools
- For securing clamp: Allen key 3 mm
- Wire stripper
- When using stranded cables: crimper for wire end ferrule
- For removing cables from terminal: Flat blade screwdriver ≤ 3 mm (0.12 in)

7.1.2 Requirements for connecting cable

The connecting cables provided by the customer must fulfill the following requirements.

Electrical safety

In accordance with applicable federal/national regulations.

Protective ground cable

Cable: 2.1 mm^2 (14 AWG)

The grounding impedance must be less than 1 Ω.

Permitted temperature range

Minimum requirement: cable temperature range ≥ ambient temperature +20 K

Power supply cable

Standard installation cable is sufficient.

Signal cable

FOUNDATION Fieldbus

Twisted, shielded two-wire cable.

For further information on planning and installing FOUNDATION Fieldbus networks see:

- Operating Instructions for "FOUNDATION Fieldbus Overview" (BA00013S)
- FOUNDATION Fieldbus Guideline
- IEC 61158-2 (MBP)

Current output 0/4 to 20 mA

Standard installation cable is sufficient.

Pulse/frequency/switch output

Standard installation cable is sufficient.

Relay output

Standard installation cable is sufficient.

Current input 0/4 to 20 mA

Standard installation cable is sufficient.

Status input

Standard installation cable is sufficient.

Cable diameter

- Cable glands supplied:
  M20 × 1.5 with cable ⌀ 6 to 12 mm (0.24 to 0.47 in)
- Spring-loaded terminals: Suitable for strands and strands with ferrules.
  Conductor cross-section 0.2 to 2.5 mm^2 (24 to 12 AWG).

Connecting cable for sensor - Proline 500 – digital transmitter

Non-hazardous area, Ex Zone 2, Class I, Division 2

Standard cable

A standard cable can be used as the connecting cable.

Standard cable	4 cores (2 pairs); pair-stranded with common shield
Shielding	Tin-plated copper-braid, optical cover ≥ 85 %
Loop resistance	Power supply line (+, –): maximum 10 Ω
Cable length	Maximum 300 m (1 000 ft), see the following table.

Cross-section	Cable length
0.34 mm^2 (AWG 22)	80 m (270 ft)
0.50 mm^2 (AWG 20)	120 m (400 ft)
0.75 mm^2 (AWG 18)	180 m (600 ft)
1.00 mm^2 (AWG 17)	240 m (800 ft)
1.50 mm^2 (AWG 15)	300 m (1 000 ft)

Optionally available connecting cable

Standard cable	2 × 2 × 0.34 mm^2 (AWG 22) PVC cable with common shield (2 pairs, pair-stranded)
Flame resistance	According to DIN EN 60332-1-2
Oil-resistance	According to DIN EN 60811-2-1
Shielding	Tin-plated copper-braid, optical cover ≥ 85 %
Operating temperature	When mounted in a fixed position: –50 to +105 °C (–58 to +221 °F); when cable can move freely: –25 to +105 °C (–13 to +221 °F)
Available cable length	Fixed: 20 m (65 ft); variable: up to maximum 50 m (165 ft)

Hazardous area, Ex Zone 1, Class I, Division 1

Standard cable

A standard cable can be used as the connecting cable.

Standard cable	4, 6, 8 cores (2, 3, 4 pairs); pair-stranded with common shield
Shielding	Tin-plated copper-braid, optical cover ≥ 85 %
Capacitance C	Maximum 760 nF IIC, maximum 4.2 µF IIB
Inductance L	Maximum 26 µH IIC, maximum 104 µH IIB
Inductance/resistance ratio (L/R)	Maximum 8.9 µH/Ω IIC, maximum 35.6 µH/Ω IIB (e.g. in accordance with IEC 60079-25)
Loop resistance	Power supply line (+, –): maximum 5 Ω
Cable length	Maximum 150 m (500 ft), see the following table.

Cross-section	Cable length	Termination
2 x 2 x 0.50 mm² (AWG 22)	50 m (165 ft)	2 x 2 x 0.50 mm² (AWG 22) 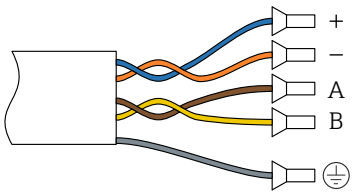 ▪ +, – = 0.5 mm² ▪ A, B = 0.5 mm²
3 x 2 x 0.50 mm² (AWG 22)	100 m (330 ft)	3 x 2 x 0.50 mm² (AWG 22) 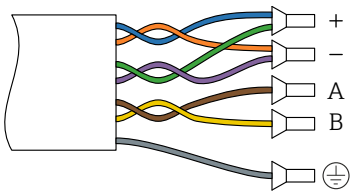 ▪ +, – = 1.0 mm² ▪ A, B = 0.5 mm²
4 x 2 x 0.50 mm² (AWG 22)	150 m (500 ft)	4 x 2 x 0.50 mm² (AWG 22) 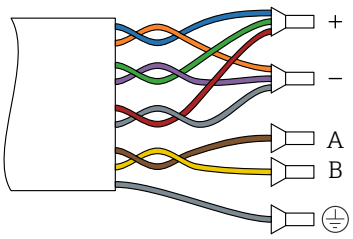 ▪ +, – = 1.5 mm² ▪ A, B = 0.5 mm²

Optionally available connecting cable

Connecting cable for	Ex Zone 1, Class I, Division 1, IIC, IIB
Standard cable	2 × 2 × 0.5 mm² (AWG 20) PVC cable with common shield (2 pairs, pair-stranded)
Flame resistance	According to DIN EN 60332-1-2
Oil-resistance	According to DIN EN 60811-2-1
Shielding	Tin-plated copper-braid, optical cover ≥ 85 %

Operating temperature	When mounted in a fixed position: −50 to +105 °C (−58 to +221 °F); when cable can move freely: −25 to +105 °C (−13 to +221 °F)
Available cable length	Fixed: 20 m (65 ft); variable: up to maximum 50 m (165 ft)

Connecting cable for sensor - Proline 500 transmitter

Standard cable	6 × 0.38 mm^2 PVC cable with common shield and individual shielded cores
Conductor resistance	≤50 Ω/km (0.015 Ω/ft)
Capacitance: core/shield	≤420 pF/m (128 pF/ft)
Cable length (max.)	20 m (65 ft)
Cable lengths (available for order)	5 m (15 ft), 10 m (32 ft), 20 m (65 ft)
Operating temperature	max. 105 °C (221 °F)

Operation in zones of severe electrical interference

The measuring system meets the general safety requirements → 📄 224 and EMC specifications → 📄 214.

Grounding is by means of the ground terminal provided for the purpose inside the connection housing. The stripped and twisted lengths of cable shield to the ground terminal must be as short as possible.

7.1.3 Terminal assignment

Transmitter: supply voltage, input/outputs

The terminal assignment of the inputs and outputs depends on the individual order version of the device. The device-specific terminal assignment is documented on an adhesive label in the terminal cover.

Supply voltage		Input/output 1		Input/output 2		Input/output 3		Input/output 4	
1 (+)	2 (−)	26 (A)	27 (B)	24 (+)	25 (−)	22 (+)	23 (−)	20 (+)	21 (−)
		Device-specific terminal assignment: adhesive label in terminal cover.							

Transmitter and sensor connection housing: connecting cable

The sensor and transmitter, which are mounted in separate locations, are interconnected by a connecting cable. The cable is connected via the sensor connection housing and the transmitter housing.

Terminal assignment and connection of the connecting cable:
- Proline 500 – digital→ 📄 39
- Proline 500 → 📄 47

7.1.4 Device plugs available

ℹ Device plugs may not be used in hazardous areas!

Order code for "Input; output 1", option SA "FOUNDATION Fieldbus"

Order code for "Electrical connection"	Cable entry 2	Cable entry 3
M, 3, 4, 5	7/8" plug	–

7.1.5 Pin assignment of device plug

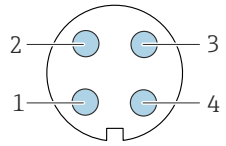

Pin		Assignment	Coding	Plug/socket
1	+	Signal +	A	Plug
2	-	Signal –		
3		Grounding		
4		Not assigned		

7.1.6 Preparing the measuring device

Carry out the steps in the following order:

1. Mount the sensor and transmitter.
2. Connection housing, sensor: Connect connecting cable.
3. Transmitter: Connect connecting cable.
4. Transmitter: Connect signal cable and cable for supply voltage.

NOTICE

Insufficient sealing of the housing!

Operational reliability of the measuring device could be compromised.

▶ Use suitable cable glands corresponding to the degree of protection.

1. Remove dummy plug if present.
2. If the measuring device is supplied without cable glands:
   Provide suitable cable gland for corresponding connecting cable.
3. If the measuring device is supplied with cable glands:
   Observe requirements for connecting cables → 🗎 34.

7.2 Connecting the measuring device

NOTICE

Limitation of electrical safety due to incorrect connection!

- Have electrical connection work carried out by correspondingly trained specialists only.
- Observe applicable federal/national installation codes and regulations.
- Comply with local workplace safety regulations.
- Always connect the protective ground cable ⏚ before connecting additional cables.
- For use in potentially explosive atmospheres, observe the information in the device-specific Ex documentation.

7.2.1 Connecting the connecting cable

⚠ WARNING

Risk of damaging the electronic components!

- Connect the sensor and transmitter to the same potential equalization.
- Only connect the sensor to a transmitter with the same serial number.
- Ground the connection housing of the sensor via the external screw terminal.

Terminal assignment

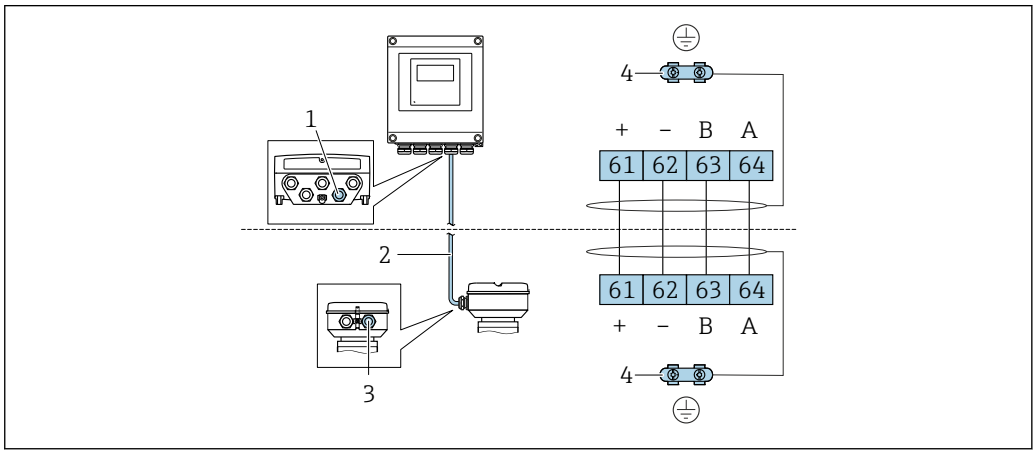

1 *Cable entry for connecting cable on transmitter housing*
2 *Connecting cable ISEM communication*
3 *Cable entry for connecting cable or connector on sensor connection housing*
4 *Grounding via cable strain relief*

Connecting the connecting cable to the sensor connection housing

- Connection via terminals with order code for "Sensor connection housing":
  - Option **A** "Aluminum, coated"→ 📄 41
  - Option **B** "Stainless" → 📄 42
  - Option **L** "Cast, stainless"→ 📄 41
- Connection via connectors with order code for "Sensor connection housing":
  Option **C** "Ultra-compact hygienic, stainless"→ 📄 43

Connection via terminals with order code for "Housing"		Available for sensor
Option **A** "Aluminum, coated"	→ 📄 41	▪ Promass A, E, F, H, I, O, P, Q, S ▪ CubemassC
Option **B** "Stainless"	→ 📄 42	▪ Promass A, E, F, H, I, O, P, Q, S ▪ CubemassC
Option **L** "Cast, stainless"	→ 📄 41	▪ Promass F, H, I, O, Q, X ▪ CubemassC

Connection via connectors with order code for "Sensor connection housing"		Available for sensor
Option **C** "Ultra-compact hygienic, stainless"	→ 📄 43	▪ Promass A, E, F, H, I, O, P, Q, S ▪ CubemassC

Connecting the connecting cable to the transmitter

The cable is connected to the transmitter via terminals → 📄 44.

Connecting the sensor connection housing via terminals

For the device version with the order code for "Sensor connection housing":
- Option **A** "Aluminum coated"
- Option **L** "Cast, stainless"

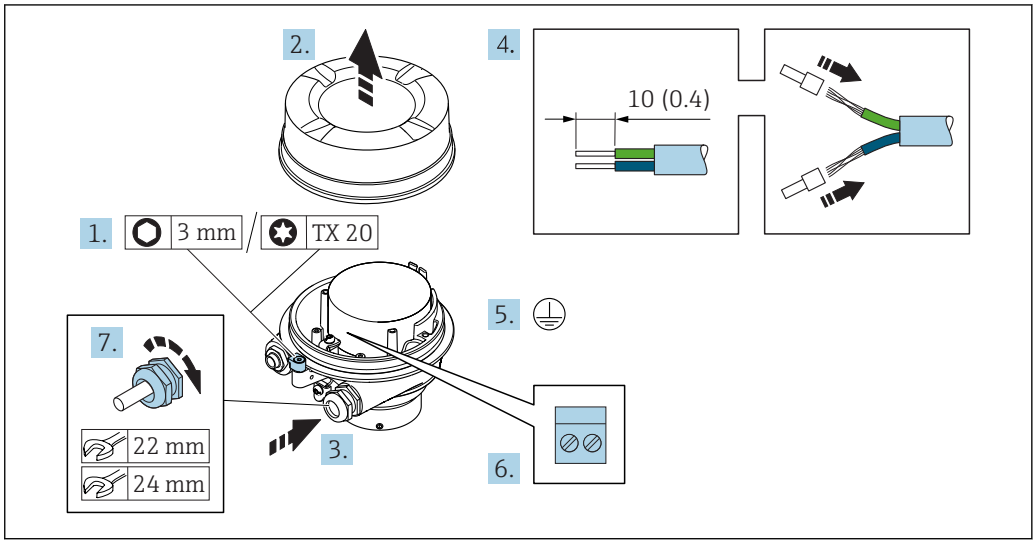

1. Loosen the securing clamp of the housing cover.
2. Unscrew the housing cover.
3. Push the cable through the cable entry . To ensure tight sealing, do not remove the sealing ring from the cable entry.
4. Strip the cable and cable ends. In the case of stranded cables, fit ferrules.
5. Connect the protective ground.
6. Connect the cable in accordance with the terminal assignment .
7. Firmly tighten the cable glands.
   ↳ This concludes the process for connecting the connecting cable.

⚠ WARNING

Housing degree of protection voided due to insufficient sealing of the housing.
- ▶ Screw in the thread on the cover without using any lubricant. The thread on the cover is coated with a dry lubricant.

8. Screw on the housing cover.
9. Tighten the securing clamp of the housing cover.

Connecting the sensor connection housing via terminals

For the device version with the order code for "Sensor connection housing":
Option **B** "Stainless"

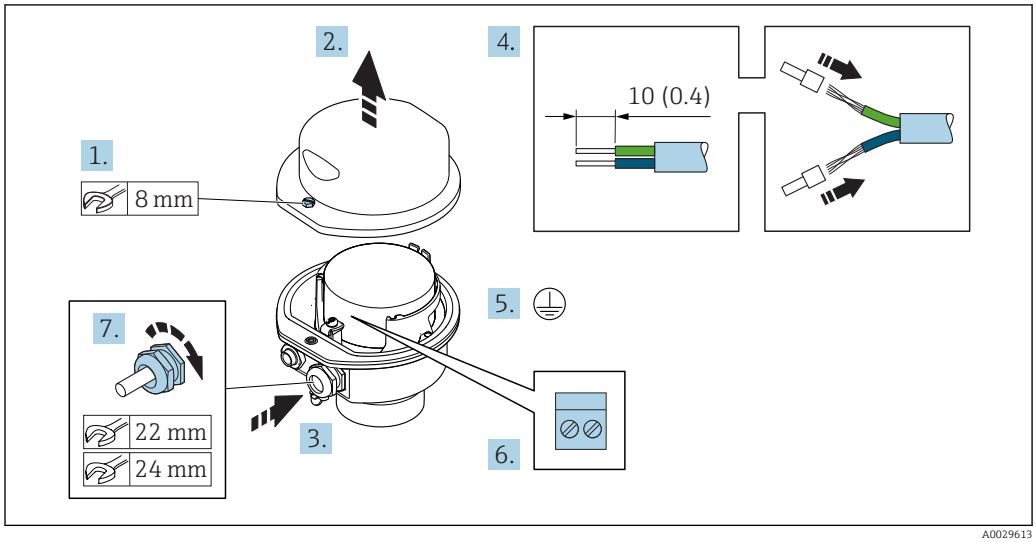

1. Release the securing screw of the housing cover.
2. Open the housing cover.
3. Push the cable through the cable entry . To ensure tight sealing, do not remove the sealing ring from the cable entry.
4. Strip the cable and cable ends. In the case of stranded cables, fit ferrules.
5. Connect the protective ground.
6. Connect the cable in accordance with the terminal assignment .
7. Firmly tighten the cable glands.
   ↳ This concludes the process for connecting the connecting cable.
8. Close the housing cover.
9. Tighten the securing screw of the housing cover.

Connecting the sensor connection housing via the connector

For the device version with the order code for "Sensor connection housing":
Option **C** "Ultra-compact hygienic, stainless"

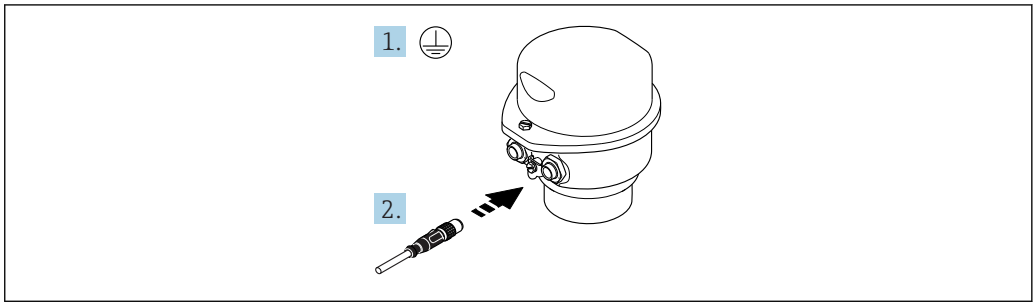

A0029615

1. Connect the protective ground.
2. Connect the connector.

Connecting the connecting cable to the transmitter

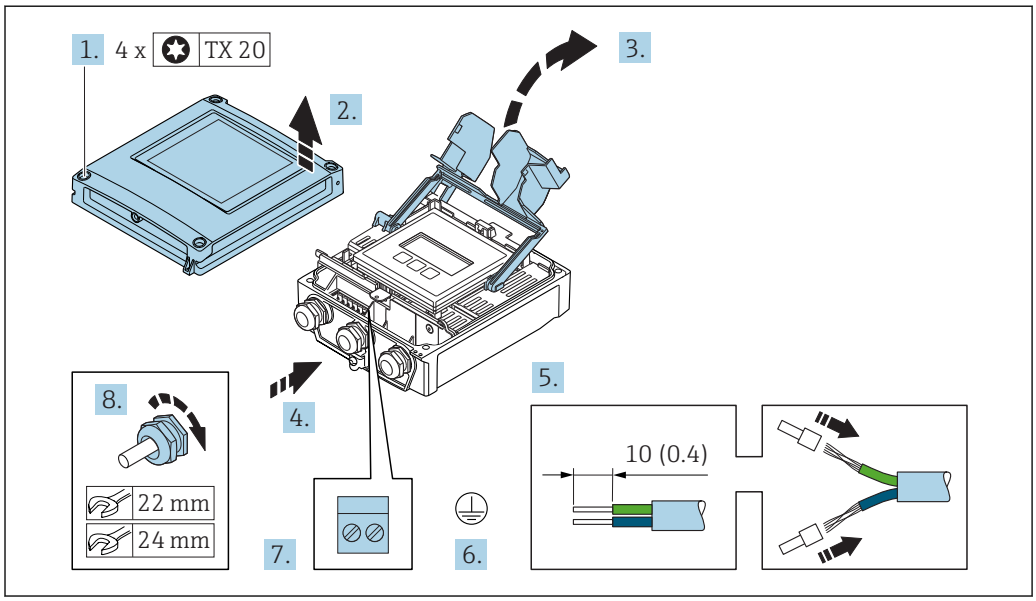

1. Loosen the 4 fixing screws on the housing cover.
2. Open the housing cover.
3. Fold open the terminal cover.
4. Push the cable through the cable entry . To ensure tight sealing, do not remove the sealing ring from the cable entry.
5. Strip the cable and cable ends. In the case of stranded cables, fit ferrules.
6. Connect the protective ground.
7. Connect the cable in accordance with the terminal assignment → 📄 39.
8. Firmly tighten the cable glands.
   ↳ This concludes the process for connecting the connecting cable.
9. Close the housing cover.
10. Tighten the securing screw of the housing cover.
11. After connecting the connecting cable:
    Connect the signal cable and the supply voltage cable → 📄 45.

7.2.2 Connecting the signal cable and the supply voltage cable

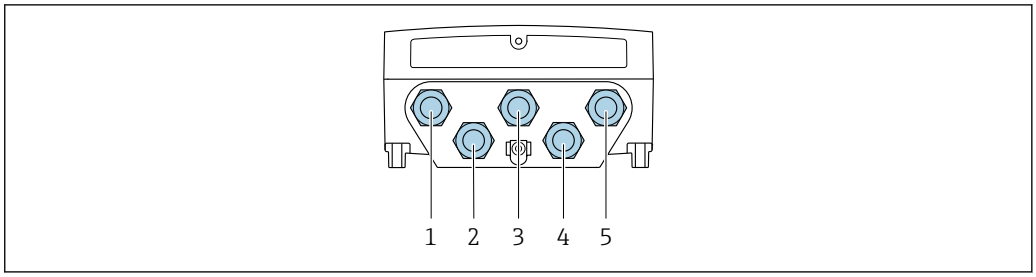

A0028200

1 *Cable entry for supply voltage*
2 *Cable entry for cable or connection of device plug for signal transmission*
3 *Cable entry for cable or connection of device plug for signal transmission*
4 *Cable entry for sensor - transmitter connecting cable*
5 *Cable entry for cable or connection of device plug for signal transmission, optional: connection of external WLAN antenna or service connector*

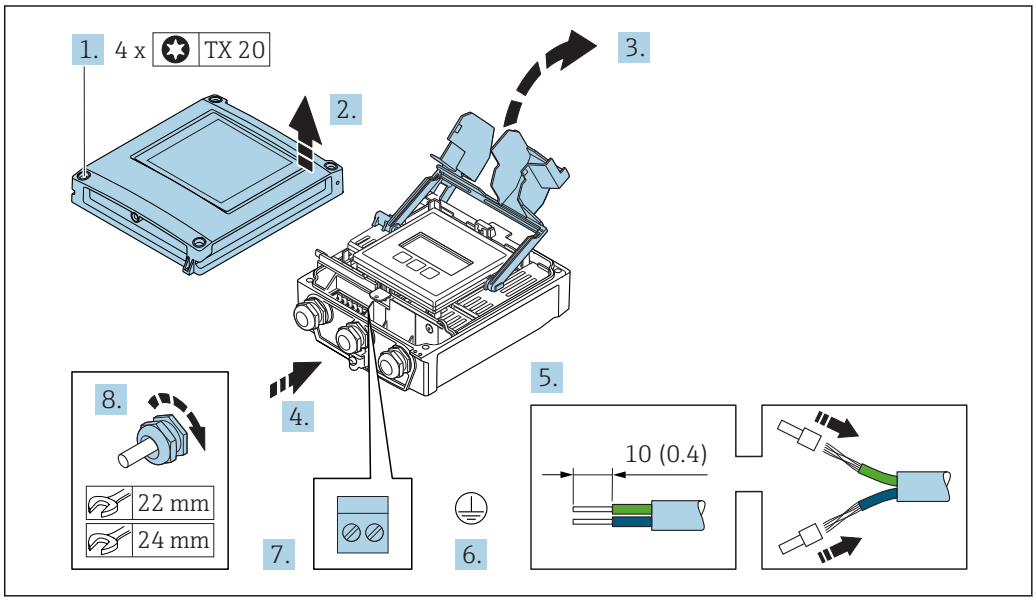

A0029597

1. Loosen the 4 fixing screws on the housing cover.
2. Open the housing cover.
3. Fold open the terminal cover.
4. Push the cable through the cable entry . To ensure tight sealing, do not remove the sealing ring from the cable entry.
5. Strip the cable and cable ends. In the case of stranded cables, fit ferrules.
6. Connect the protective ground.
7. Connect the cable in accordance with the terminal assignment .
   ↳ **Signal cable terminal assignment:** The device-specific terminal assignment is documented on an adhesive label in the terminal cover.
   Supply voltage terminal assignment: Adhesive label in the terminal cover or → 📄 37.
8. Firmly tighten the cable glands.
   ↳ This concludes the cable connection process.
9. Close the terminal cover.
10. Close the housing cover.

⚠ WARNING

Housing degree of protection may be voided due to insufficient sealing of the housing.

- ▶ Screw in the screw without using any lubricant.

⚠ WARNING

Excessive tightening torque applied to the fixing screws!

Risk of damaging the plastic transmitter.

- ▶ Tighten the fixing screws as per the tightening torque: 2 Nm (1.5 lbf ft)

11. Tighten the 4 fixing screws on the housing cover.

Removing a cable

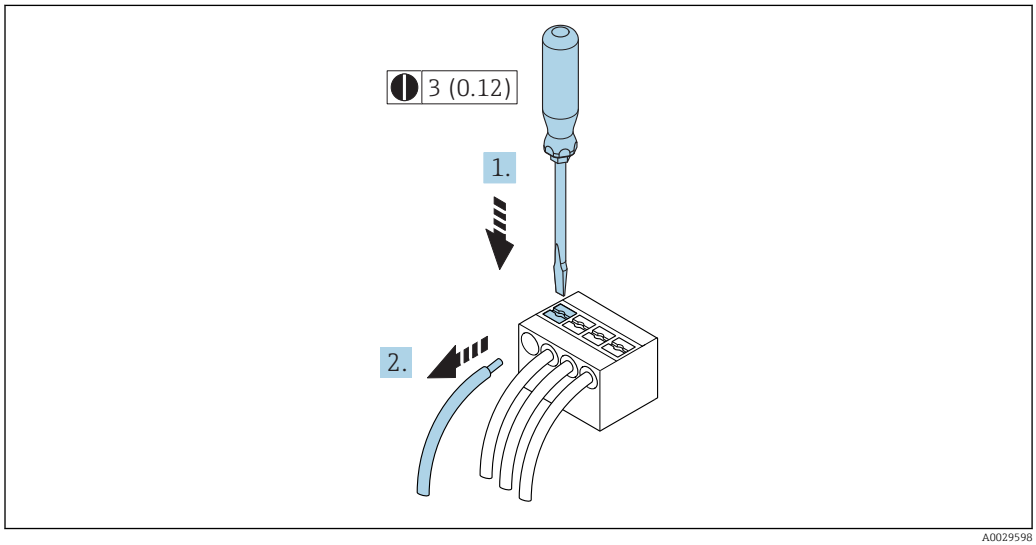

15 Engineering unit mm (in)

1. To remove a cable from the terminal, use a flat-blade screwdriver to push the slot between the two terminal holes
2. while simultaneously pulling the cable end out of the terminal.

7.3 Connecting the measuring device

NOTICE

Limitation of electrical safety due to incorrect connection!

- Have electrical connection work carried out by correspondingly trained specialists only.
- Observe applicable federal/national installation codes and regulations.
- Comply with local workplace safety regulations.
- Always connect the protective ground cable ⏚ before connecting additional cables.
- For use in potentially explosive atmospheres, observe the information in the device-specific Ex documentation.

7.3.1 Connecting the connecting cable

⚠ WARNING

Risk of damaging the electronic components!

- Connect the sensor and transmitter to the same potential equalization.
- Only connect the sensor to a transmitter with the same serial number.
- Ground the connection housing of the sensor via the external screw terminal.

Terminal assignment

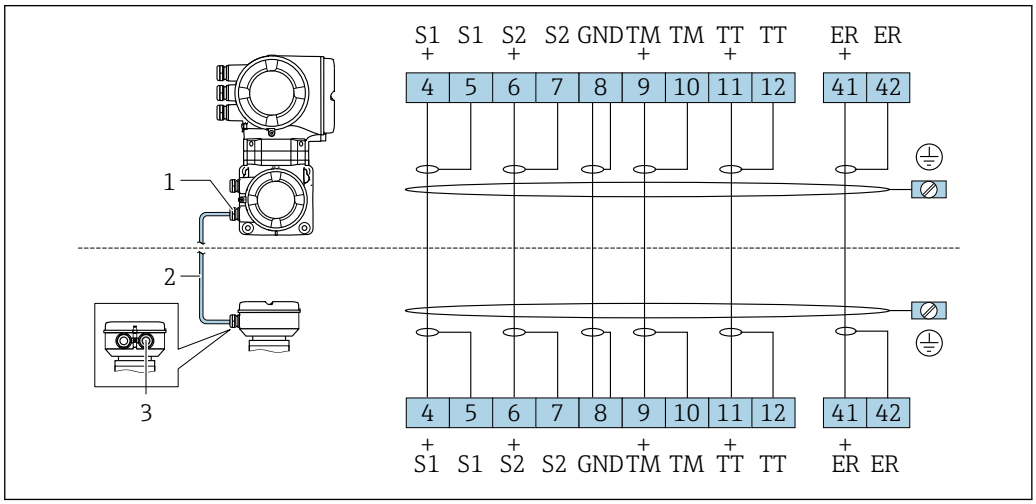

1 *Cable entry for connecting cable on transmitter connection housing*
2 *Connecting cable*
3 *Cable entry for connecting cable on sensor connection housing*

Connecting the connecting cable to the sensor connection housing

Connection via terminals with order code for "Housing":
– Option **B** "Stainless"→ 📄 49
– Option **L** "Cast, stainless"→ 📄 48

Connecting the connecting cable to the transmitter

The cable is connected to the transmitter via terminals → 📄 50.

Connecting the sensor connection housing via terminals

For the device version with the order code for "Housing":
Option **L** "Cast, stainless"

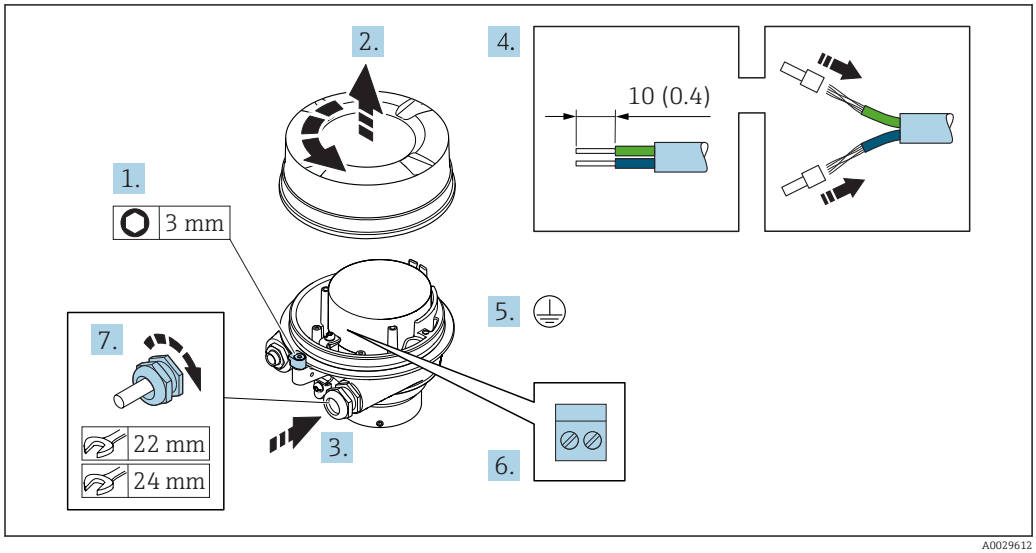

1. Loosen the securing clamp of the housing cover.
2. Unscrew the housing cover.
3. Push the cable through the cable entry . To ensure tight sealing, do not remove the sealing ring from the cable entry.
4. Strip the cable and cable ends. In the case of stranded cables, fit ferrules.
5. Connect the protective ground.
6. Connect the cable in accordance with the terminal assignment → 47.
7. Firmly tighten the cable glands.
   ↳ This concludes the process for connecting the connecting cable.

WARNING

Housing degree of protection voided due to insufficient sealing of the housing.

- Screw in the thread on the cover without using any lubricant. The thread on the cover is coated with a dry lubricant.

8. Screw on the housing cover.
9. Tighten the securing clamp of the housing cover.

Connecting the sensor connection housing via terminals

For the device version with the order code for "Housing":
Option **B** "Stainless"

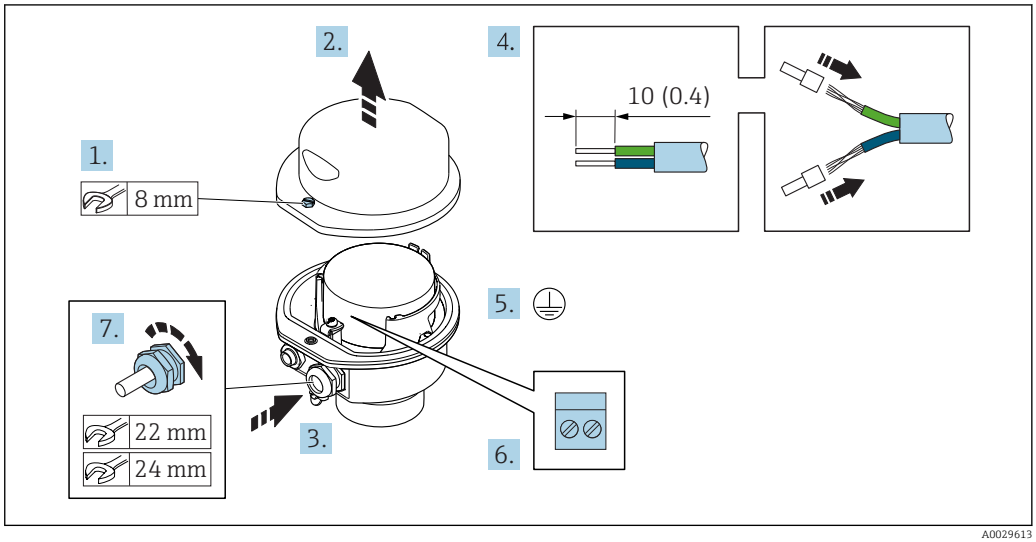

A0029613

1. Release the securing screw of the housing cover.
2. Open the housing cover.
3. Push the cable through the cable entry . To ensure tight sealing, do not remove the sealing ring from the cable entry.
4. Strip the cable and cable ends. In the case of stranded cables, fit ferrules.
5. Connect the protective ground.
6. Connect the cable in accordance with the terminal assignment → 47.
7. Firmly tighten the cable glands.
   ↳ This concludes the process for connecting the connecting cable.
8. Close the housing cover.
9. Tighten the securing screw of the housing cover.

Connecting the connecting cable to the transmitter

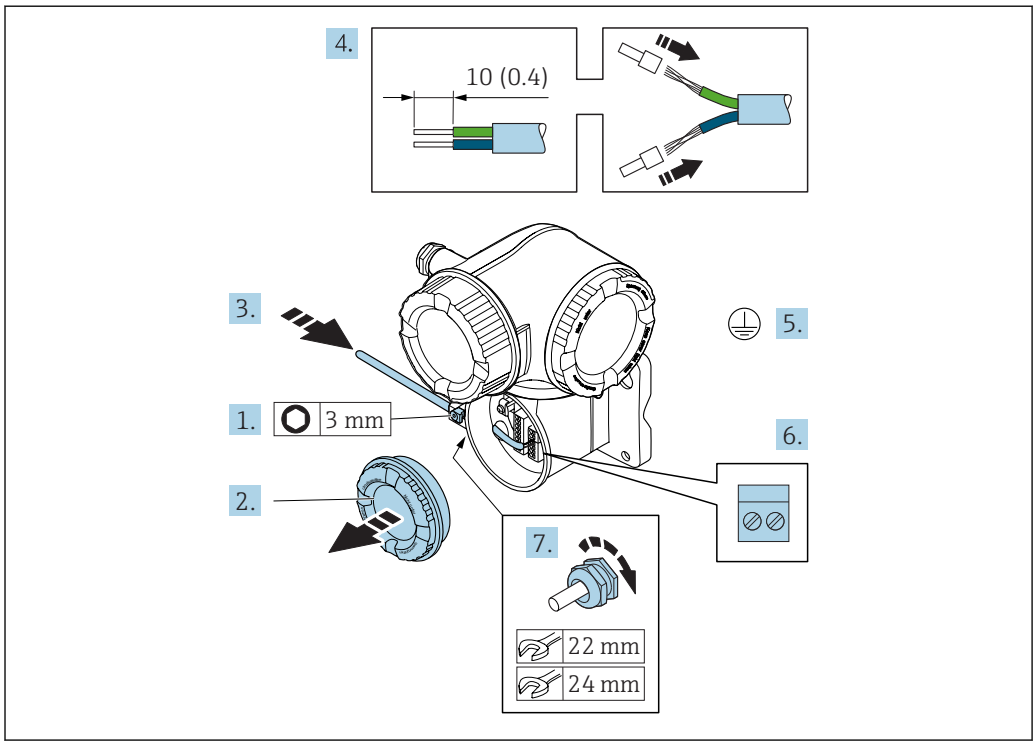

A0029592

1. Loosen the securing clamp of the connection compartment cover.
2. Unscrew the connection compartment cover.
3. Push the cable through the cable entry . To ensure tight sealing, do not remove the sealing ring from the cable entry.
4. Strip the cable and cable ends. In the case of stranded cables, also fit ferrules.
5. Connect the protective ground.
6. Connect the cable in accordance with the terminal assignment → 📖 47.
7. Firmly tighten the cable glands.
   ↳ This concludes the process for connecting the connecting cable.
8. Screw on the connection compartment cover.
9. Tighten the securing clamp of the connection compartment cover.
10. After connecting the connecting cable: After connecting the connecting cables: Connect the signal cable and the supply voltage cable → 📖 51.

7.3.2 Connecting the signal cable and the supply voltage cable

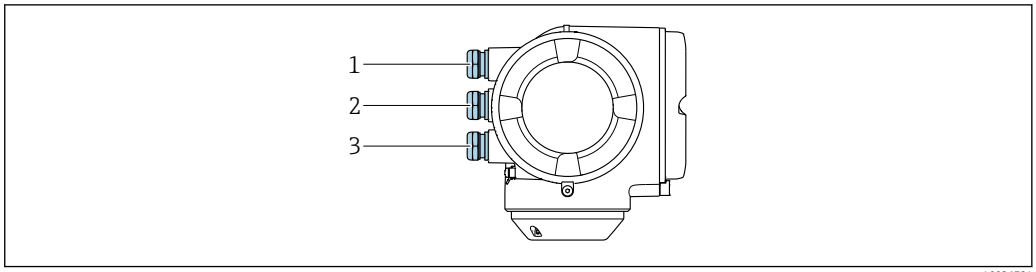

A0026781

1 Cable entry for supply voltage
2 Cable entry for signal transmission, input/output 1 and 2
3 Cable entry for input/output signal transmission; Optional: connection of external WLAN antenna or service plug

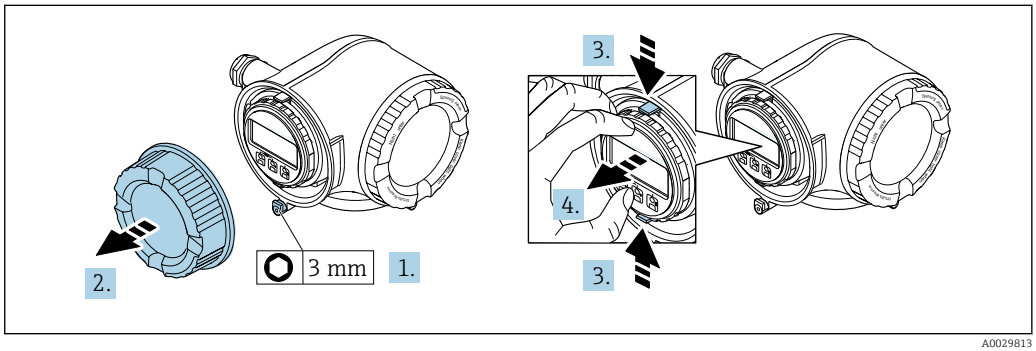

A0029813

1. Loosen the securing clamp of the connection compartment cover.
2. Unscrew the connection compartment cover.
3. Squeeze the tabs of the display module holder together.
4. Remove the display module holder.

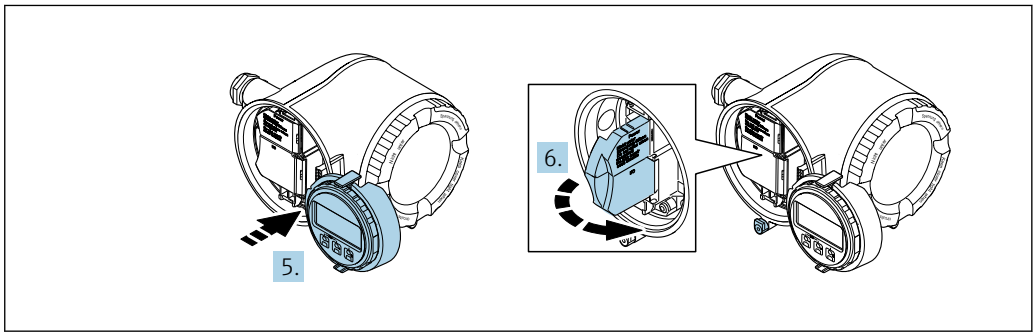

A0029814

5. Attach the holder to the edge of the electronics compartment.
6. Open the terminal cover.

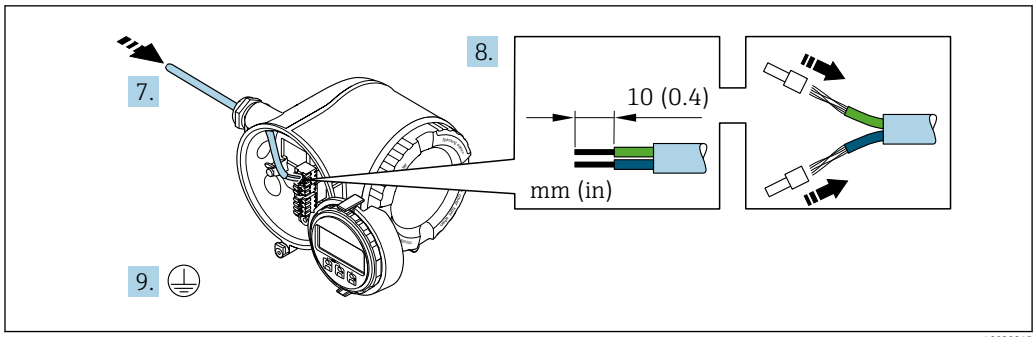

A0029815

7. Push the cable through the cable entry . To ensure tight sealing, do not remove the sealing ring from the cable entry.
8. Strip the cable and cable ends. In the case of stranded cables, also fit ferrules.
9. Connect the protective ground.

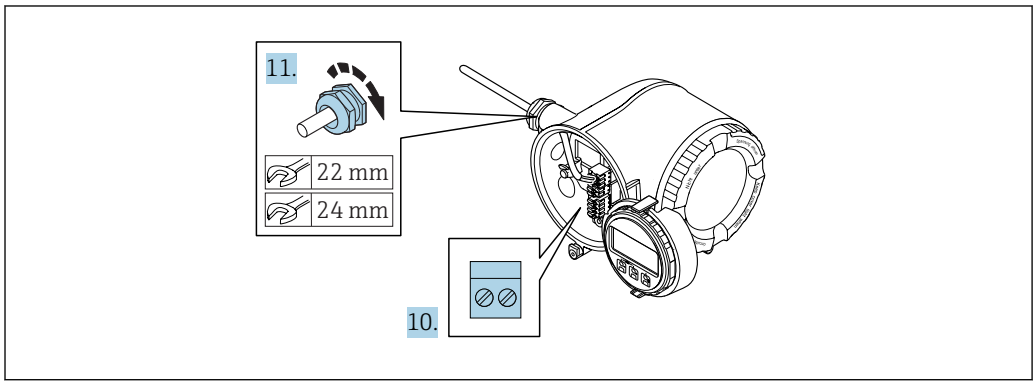

A0029816

10. Connect the cable in accordance with the terminal assignment .
    ↳ **Signal cable terminal assignment:** The device-specific terminal assignment is documented on an adhesive label in the terminal cover.
    Supply voltage terminal assignment: Adhesive label in the terminal cover or → 📄 37.
11. Firmly tighten the cable glands.
    ↳ This concludes the cable connection process.
12. Close the terminal cover.
13. Fit the display module holder in the electronics compartment.
14. Screw on the connection compartment cover.
15. Secure the securing clamp of the connection compartment cover.

Removing a cable

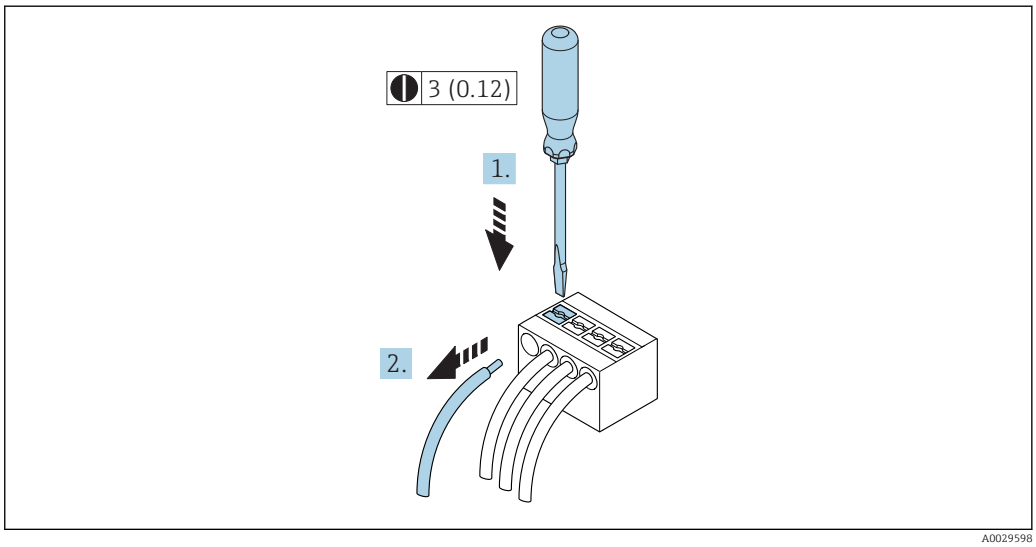

16 Engineering unit mm (in)

1. To remove a cable from the terminal, use a flat-blade screwdriver to push the slot between the two terminal holes
2. while simultaneously pulling the cable end out of the terminal.

7.4 Ensure potential equalization

7.4.1 Requirements

No special measures for potential equalization are required.

7.5 Special connection instructions

7.5.1 Connection examples

FOUNDATION Fieldbus

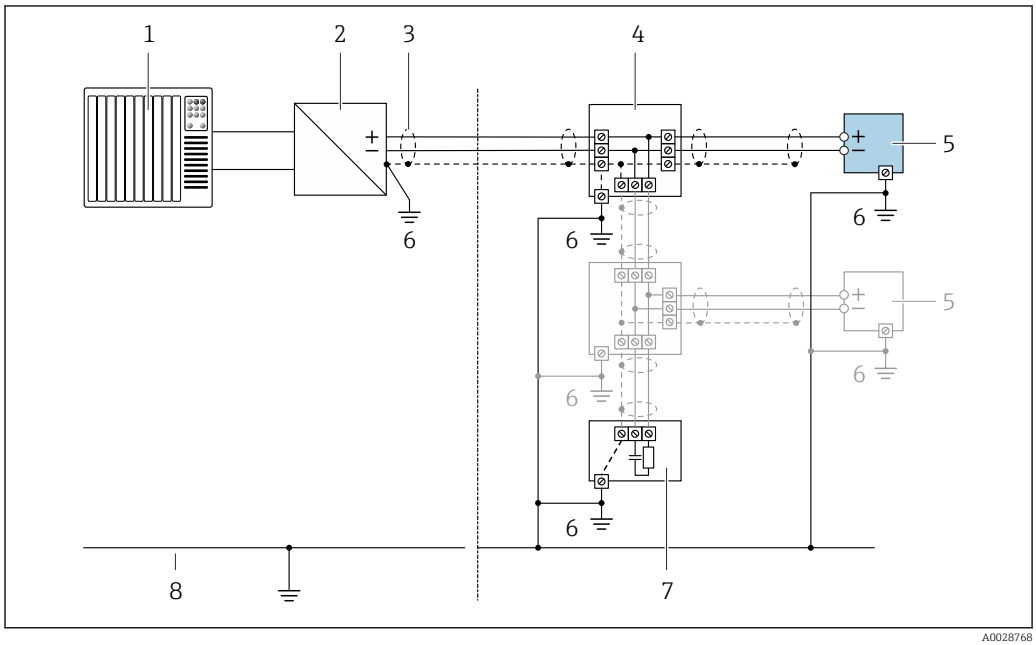

17 *Connection example for FOUNDATION Fieldbus*

1 *Control system (e.g. PLC)*
2 *Power Conditioner (FOUNDATION Fieldbus)*
3 *Cable shield: the cable shield must be grounded at both ends to comply with EMC requirements; observe cable specifications*
4 *T-box*
5 *Measuring device*
6 *Local grounding*
7 *Bus terminator*
8 *Potential matching line*

Current output 4-20 mA

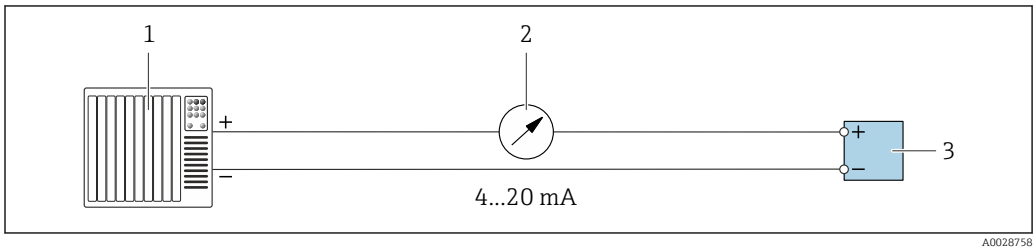

18 *Connection example for 4-20 mA current output (active)*

1 *Automation system with current input (e.g. PLC)*
2 *Analog display unit: observe maximum load*
3 *Transmitter*

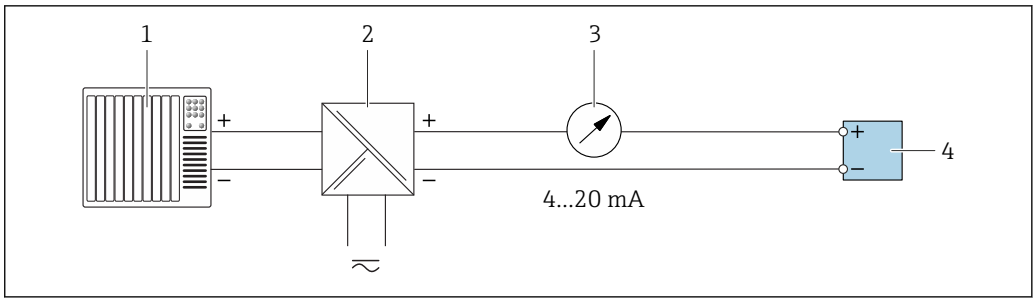

19 *Connection example for 4-20 mA current output (passive)*

1 *Automation system with current input (e.g. PLC)*
2 *Active barrier for power supply (e.g. RN221N)*
3 *Analog display unit: observe maximum load*
4 *Transmitter*

Pulse/frequency output

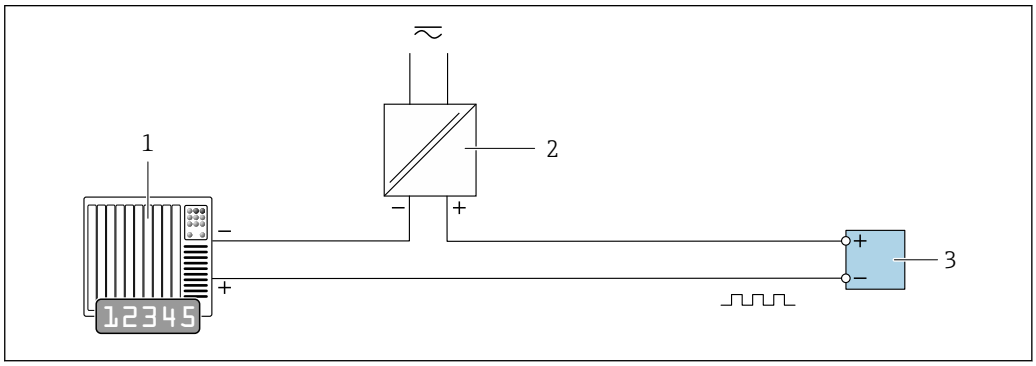

20 *Connection example for pulse/frequency output (passive)*

1 *Automation system with pulse/frequency input (e.g. PLC)*
2 *Power supply*
3 *Transmitter: Observe input values → 202*

Switch output

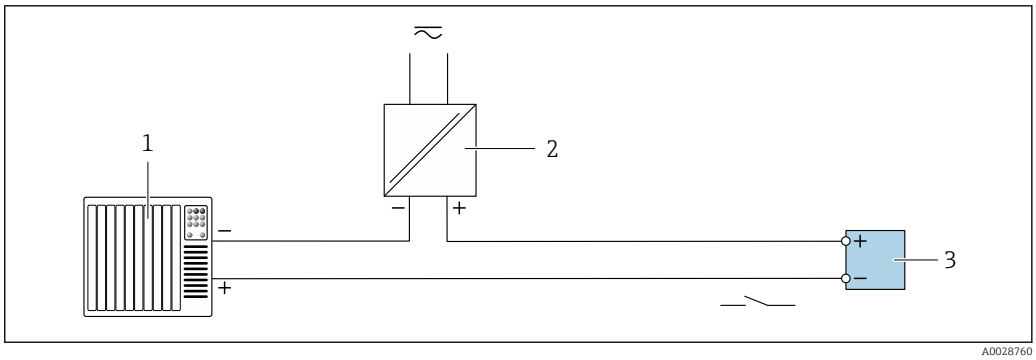

21 *Connection example for switch output (passive)*

1 *Automation system with switch input (e.g. PLC)*
2 *Power supply*
3 *Transmitter: Observe input values → 202*

Relay output

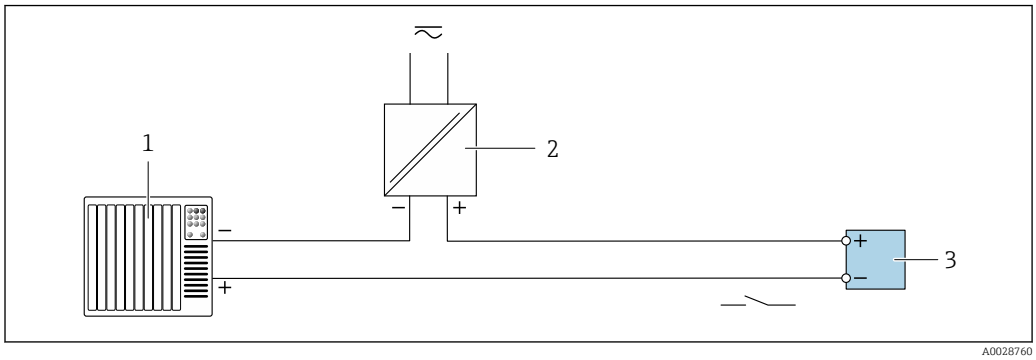

22 *Connection example for relay output (passive)*

1 *Automation system with relay input (e.g. PLC)*
2 *Power supply*
3 *Transmitter: Observe input values* → 203

Current input

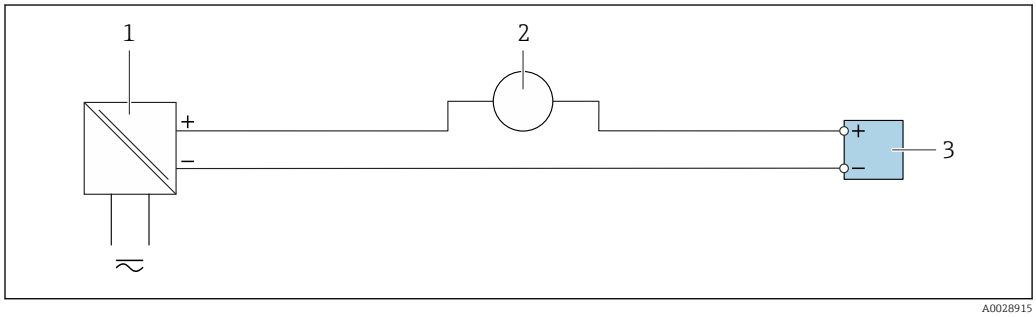

23 *Connection example for 4 to 20 mA current input*

1 *Power supply*
2 *External measuring device (for reading in pressure or temperature, for instance)*
3 *Transmitter: Observe input values*

Status input

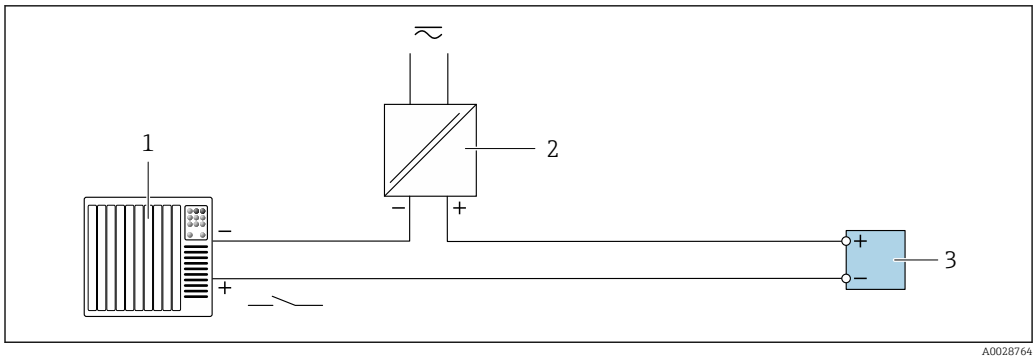

24 *Connection example for status input*

1 *Automation system with status output (e.g. PLC)*
2 *Power supply*
3 *Transmitter: Observe input values*

7.6 Ensuring the degree of protection

The measuring device fulfills all the requirements for the IP66/67 degree of protection, Type 4X enclosure.

To guarantee IP66/67 degree of protection, Type 4X enclosure, carry out the following steps after the electrical connection:

1. Check that the housing seals are clean and fitted correctly.
2. Dry, clean or replace the seals if necessary.
3. Tighten all housing screws and screw covers.
4. Firmly tighten the cable glands.
5. To ensure that moisture does not enter the cable entry:
   Route the cable so that it loops down before the cable entry ("water trap").
   ↳
   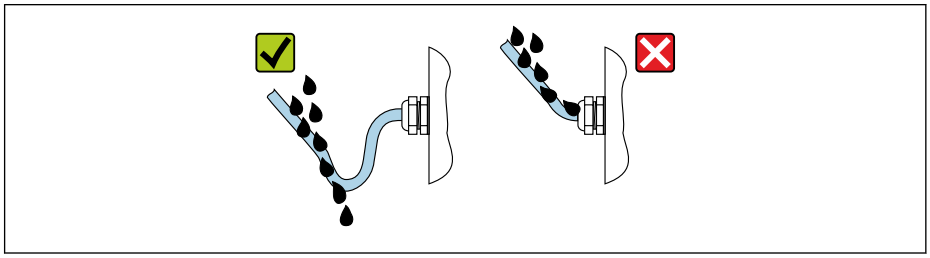
   A0029278
6. Insert dummy plugs into unused cable entries.

7.7 Post-connection check

Are cables or the device undamaged (visual inspection)?	❑
Do the cables used meet the requirements?	❑
Do the cables have adequate strain relief?	❑
Are all the cable glands installed, firmly tightened and leak-tight? Cable run with "water trap" → 🗎 56 ?	❑

8 Operation options

8.1 Overview of operation options

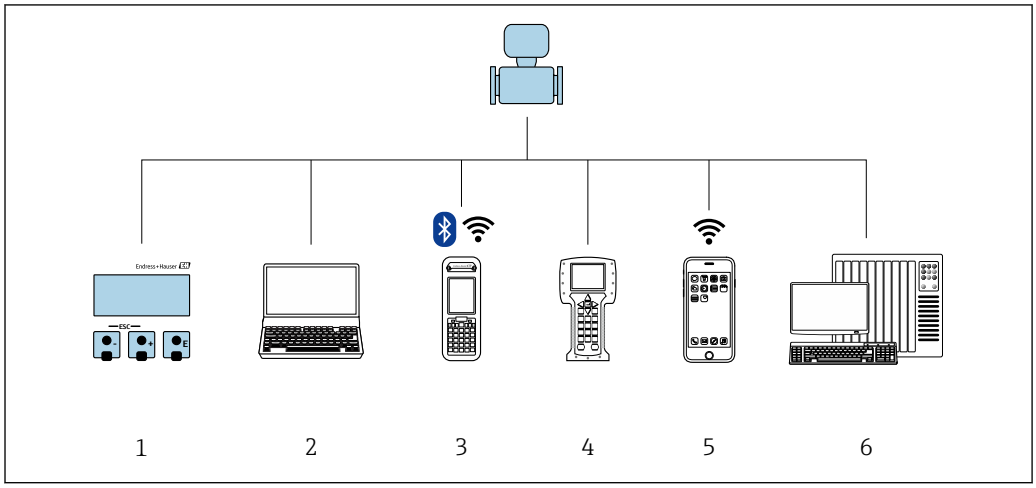

A0029295

1 *Local operation via display module*
2 *Computer with Web browser (e.g. Internet Explorer) or with operating tool (e.g. FieldCare, DeviceCare, AMS Device Manager, SIMATIC PDM)*
3 *Field Xpert SFX350 or SFX370*
4 *Field Communicator 475*
5 *Mobile handheld terminal*
6 *Control system (e.g. PLC)*

8.2 Structure and function of the operating menu

8.2.1 Structure of the operating menu

For an overview of the operating menu for experts: "Description of Device Parameters" document supplied with the device→ 227

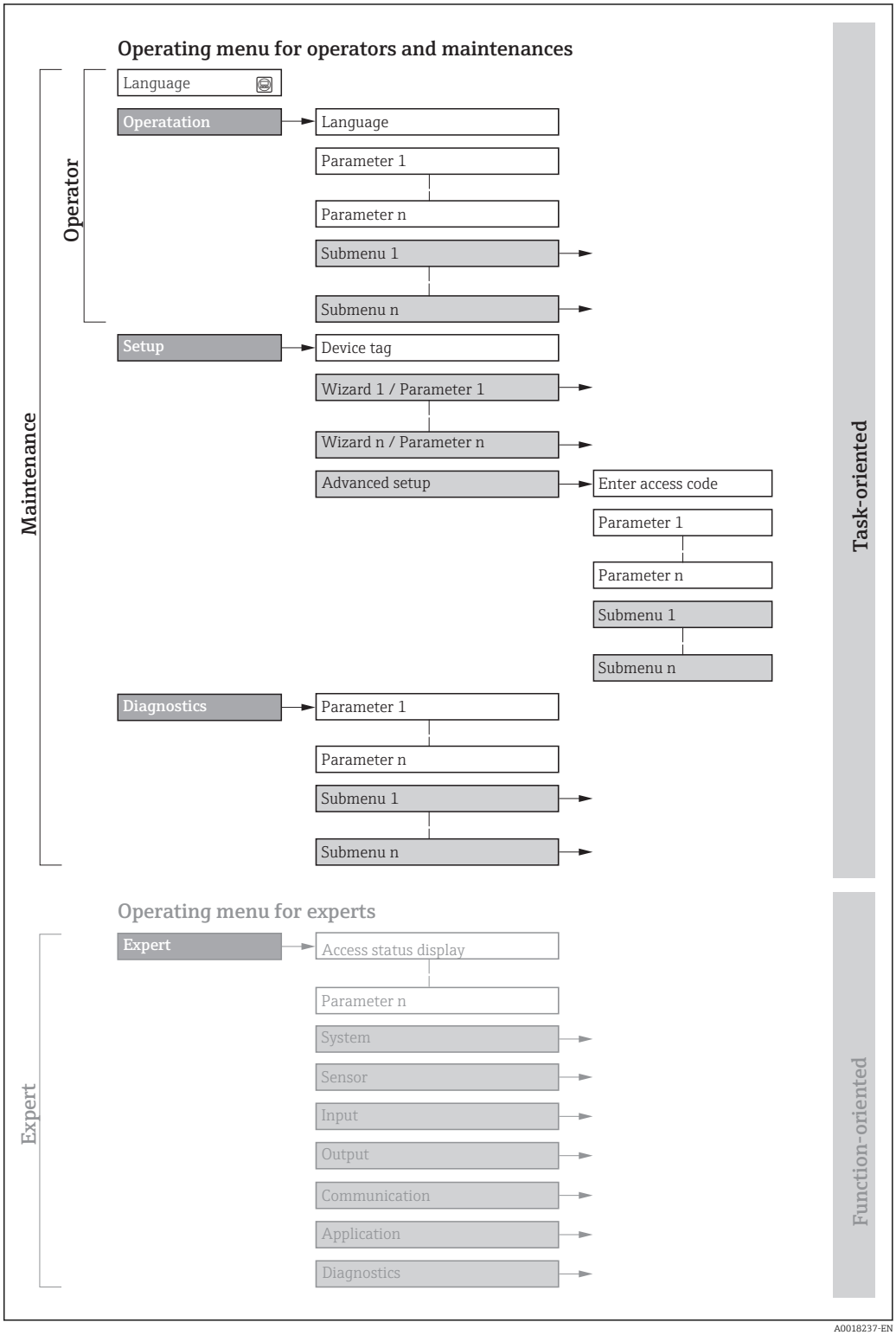

25 *Schematic structure of the operating menu*

8.2.2 Operating philosophy

The individual parts of the operating menu are assigned to certain user roles (operator, maintenance etc.). Each user role contains typical tasks within the device lifecycle.

Menu/parameter		User role and tasks	Content/meaning
Language	task-oriented	**Role "Operator", "Maintenance"** Tasks during operation: ▪ Configuring the operational display ▪ Reading measured values	▪ Defining the operating language ▪ Defining the Web server operating language ▪ Resetting and controlling totalizers
Operation			▪ Configuring the operational display (e.g. display format, display contrast) ▪ Resetting and controlling totalizers
Setup		**"Maintenance" role** Commissioning: ▪ Configuration of the measurement ▪ Configuration of the inputs and outputs ▪ Configuration of the communication interface	Wizards for fast commissioning: ▪ Set the system units ▪ Configuration of the communication interface ▪ Define the medium ▪ Display I/O/configuration ▪ Configure the inputs ▪ Configure the outputs ▪ Configuring the operational display ▪ Define the output conditioning ▪ Set the low flow cut off ▪ Configure partial and empty pipe detection Advanced setup ▪ For more customized configuration of the measurement (adaptation to special measuring conditions) ▪ Configuration of totalizers ▪ Configure the WLAN settings ▪ Administration (define access code, reset measuring device)
Diagnostics		**"Maintenance" role** Fault elimination: ▪ Diagnostics and elimination of process and device errors ▪ Measured value simulation	Contains all parameters for error detection and analyzing process and device errors: ▪ Diagnostic list Contains up to 5 currently pending diagnostic messages. ▪ Event logbook Contains event messages that have occurred. ▪ Device information Contains information for identifying the device. ▪ Measured values Contains all current measured values. ▪ **Data logging** submenu with "Extended HistoROM" order option Storage and visualization of measured values ▪ Heartbeat The functionality of the device is checked on demand and the verification results are documented. ▪ Simulation Is used to simulate measured values or output values.

Menu/parameter		User role and tasks	Content/meaning
Expert	function-oriented	Tasks that require detailed knowledge of the function of the device: ▪ Commissioning measurements under difficult conditions ▪ Optimal adaptation of the measurement to difficult conditions ▪ Detailed configuration of the communication interface ▪ Error diagnostics in difficult cases	Contains all the parameters of the device and makes it possible to access these parameters directly using an access code. The structure of this menu is based on the function blocks of the device: ▪ System Contains all higher-order device parameters which do not concern the measurement or the communication interface. ▪ Sensor Configuration of the measurement. ▪ Output Configure the pulse/frequency/switch output. ▪ Input Configuring the status input. ▪ Output Configuring of the analog current outputs as well as the pulse/frequency and switch output. ▪ Communication Configuration of the digital communication interface and the Web server. ▪ Submenus for function blocks (e.g. "Analog Inputs") Configuration of function blocks. ▪ Application Configure the functions that go beyond the actual measurement (e.g. totalizer). ▪ Diagnostics Error detection and analysis of process and device errors and for device simulation and Heartbeat Technology.

8.3 Access to the operating menu via the local display

8.3.1 Operational display

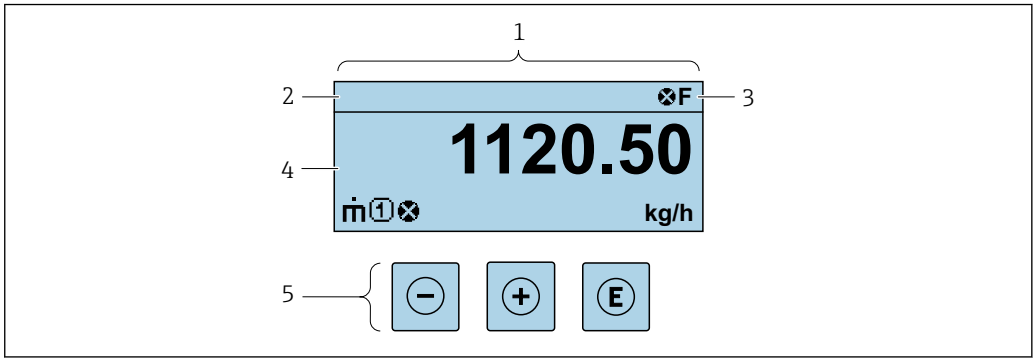

1 *Operational display*
2 *Device tag*
3 *Status area*
4 *Display area for measured values (4-line)*
5 *Operating elements*→ 📄 *66*

Status area

The following symbols appear in the status area of the operational display at the top right:
- Status signals→ 156
  - **F**: Failure
  - **C**: Function check
  - **S**: Out of specification
  - **M**: Maintenance required
- Diagnostic behavior→ 157
  - ⊗: Alarm
  - ⚠: Warning
- 🔒: Locking (the device is locked via the hardware)
- ⇆: Communication (communication via remote operation is active)

Display area

In the display area, each measured value is prefaced by certain symbol types for further description:

Measured values

Symbol	Meaning
$\dot{m}$	Mass flow
$\dot{V}$	▪ Volume flow ▪ Corrected volume flow
ρ	▪ Density ▪ Reference density
🌡	Temperature
Σ	Totalizer ℹ The measurement channel number indicates which of the three totalizers is displayed.
⊕	Status input

Measurement channel numbers

Symbol	Meaning
1 … 4	Measurement channel 1 to 4
The measurement channel number is displayed only if more than one channel is present for the same measured variable type (e.g. Totalizer 1 to 3).	

Diagnostic behavior

The diagnostic behavior pertains to a diagnostic event that is relevant to the displayed measured variable. For information on the symbols → 157

ℹ The number and display format of the measured values can be configured via the **Format display** parameter (→ 117).

8.3.2 Navigation view

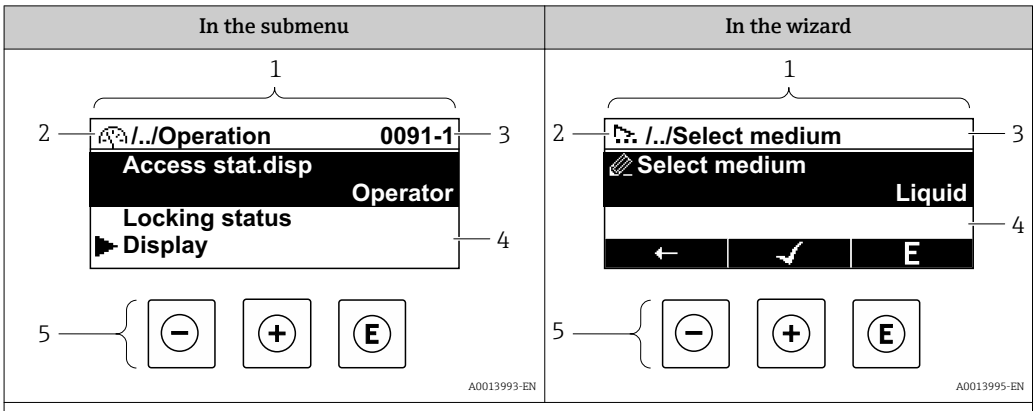

1 *Navigation view*
2 *Navigation path to current position*
3 *Status area*
4 *Display area for navigation*
5 *Operating elements* → 📄 *66*

Navigation path

The navigation path - displayed at the top left in the navigation view - consists of the following elements:

	In the submenu: Display symbol for menu In the wizard: Display symbol for wizard	Omission symbol for operating menu levels in between	Name of current Submenu Wizard Parameters
Examples		/ ../	**Display**
		/ ../	**Display**

For more information about the icons in the menu, refer to the "Display area" section → 📄 64

Status area

The following appears in the status area of the navigation view in the top right corner:
- In the submenu
  - The direct access code for the parameter you are navigating to (e.g. 0022-1)
  - If a diagnostic event is present, the diagnostic behavior and status signal
- In the wizard
  If a diagnostic event is present, the diagnostic behavior and status signal

- For information on the diagnostic behavior and status signal → 📄 156
- For information on the function and entry of the direct access code → 📄 69

Display area

Menus

Symbol	Meaning
	Operation Appears: ▪ In the menu next to the "Operation" selection ▪ At the left in the navigation path in the **Operation** menu
	Setup Appears: ▪ In the menu next to the "Setup" selection ▪ At the left in the navigation path in the **Setup** menu
	Diagnostics Appears: ▪ In the menu next to the "Diagnostics" selection ▪ At the left in the navigation path in the **Diagnostics** menu
	Expert Appears: ▪ In the menu next to the "Expert" selection ▪ At the left in the navigation path in the **Expert** menu

Submenus, wizards, parameters

Symbol	Meaning
	Submenu
	Wizard
	Parameters within a wizard No display symbol exists for parameters in submenus.

Locking

Symbol	Meaning
	Parameter locked When displayed in front of a parameter name, indicates that the parameter is locked. ▪ By a user-specific access code ▪ By the hardware write protection switch

Wizard operation

Symbol	Meaning
	Switches to the previous parameter.
	Confirms the parameter value and switches to the next parameter.
E	Opens the editing view of the parameter.

8.3.3 Editing view

Numeric editor	Text editor
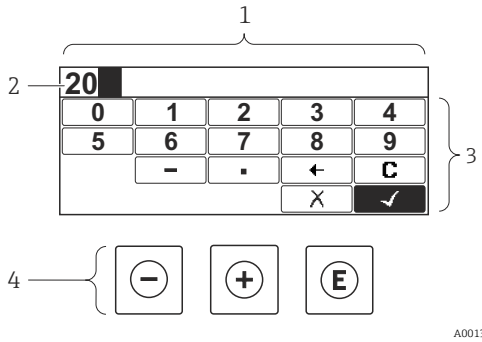	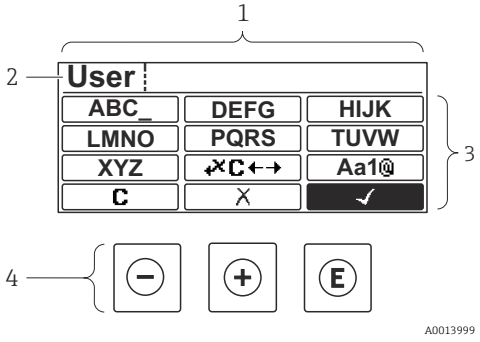

1 *Editing view*
2 *Display area of the entered values*
3 *Input mask*
4 *Operating elements* → 📄 66

Input mask

The following input symbols are available in the input mask of the numeric and text editor:

Numeric editor

Symbol	Meaning
0 … 9	Selection of numbers from 0 to 9.
.	Inserts decimal separator at the input position.
–	Inserts minus sign at the input position.
✓	Confirms selection.
←	Moves the input position one position to the left.
✕	Exits the input without applying the changes.
C	Clears all entered characters.

Text editor

Symbol	Meaning
Aa1@	Toggle ▪ Between upper-case and lower-case letters ▪ For entering numbers ▪ For entering special characters
ABC_ … XYZ	Selection of letters from A to Z.

abc _ ... xyz	Selection of letters from a to z.
'"^ _ ... ~& _	Selection of special characters.
✓	Confirms selection.
✗C←→	Switches to the selection of the correction tools.
✗	Exits the input without applying the changes.
C	Clears all entered characters.

Correction symbols under ✗C←→

Symbol	Meaning
C	Clears all entered characters.
→	Moves the input position one position to the right.
←	Moves the input position one position to the left.
✗	Deletes one character immediately to the left of the input position.

8.3.4 Operating elements

Key	Meaning
⊖	**Minus key** *In a menu, submenu* Moves the selection bar upwards in a choose list. *With a Wizard* Confirms the parameter value and goes to the previous parameter. *With a text and numeric editor* In the input mask, moves the selection bar to the left (backwards).
⊕	**Plus key** *In a menu, submenu* Moves the selection bar downwards in a choose list. *With a Wizard* Confirms the parameter value and goes to the next parameter. *With a text and numeric editor* Moves the selection bar to the right (forwards) in an input screen.

Key	Meaning
E	**Enter key** *For operational display* ▪ Pressing the key briefly opens the operating menu. ▪ Pressing the key for 2 s opens the context menu. *In a menu, submenu* ▪ Pressing the key briefly: – Opens the selected menu, submenu or parameter. – Starts the wizard. – If help text is open, closes the help text of the parameter. ▪ Pressing the key for 2 s for parameter: If present, opens the help text for the function of the parameter. *With a Wizard* Opens the editing view of the parameter. *With a text and numeric editor* ▪ Pressing the key briefly: – Opens the selected group. – Carries out the selected action. ▪ Pressing the key for 2 s confirms the edited parameter value.
− + +	**Escape key combination (press keys simultaneously)** *In a menu, submenu* ▪ Pressing the key briefly: – Exits the current menu level and takes you to the next higher level. – If help text is open, closes the help text of the parameter. ▪ Pressing the key for 2 s returns you to the operational display ("home position"). *With a Wizard* Exits the wizard and takes you to the next higher level. *With a text and numeric editor* Closes the text or numeric editor without applying changes.
− + E	**Minus/Enter key combination (press the keys simultaneously)** Reduces the contrast (brighter setting).
+ + E	**Plus/Enter key combination (press and hold down the keys simultaneously)** Increases the contrast (darker setting).
− + + + E	**Minus/Plus/Enter key combination (press the keys simultaneously)** *For operational display* Enables or disables the keypad lock (only SD02 display module).

8.3.5 Opening the context menu

Using the context menu, the user can call up the following menus quickly and directly from the operational display:

- Setup
- Data backup
- Simulation

Calling up and closing the context menu

The user is in the operational display.

1. Press E for 2 s.
   ↳ The context menu opens.

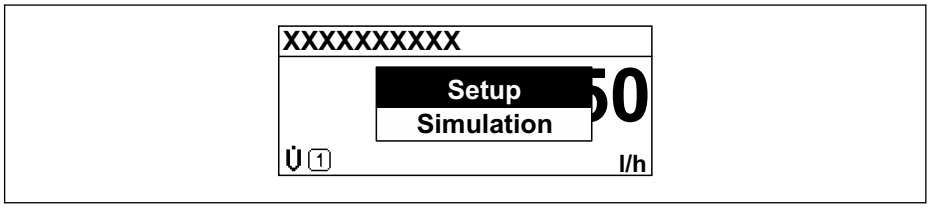

A0017421-EN

2. Press ⊟ + ⊞ simultaneously.
   ↳ The context menu is closed and the operational display appears.

Calling up the menu via the context menu

1. Open the context menu.
2. Press ⊞ to navigate to the desired menu.
3. Press Ⓔ to confirm the selection.
   ↳ The selected menu opens.

8.3.6 Navigating and selecting from list

Different operating elements are used to navigate through the operating menu. The navigation path is displayed on the left in the header. Icons are displayed in front of the individual menus. These icons are also shown in the header during navigation.

For an explanation of the navigation view with symbols and operating elements → 63

Example: Setting the number of displayed measured values to "2 values"

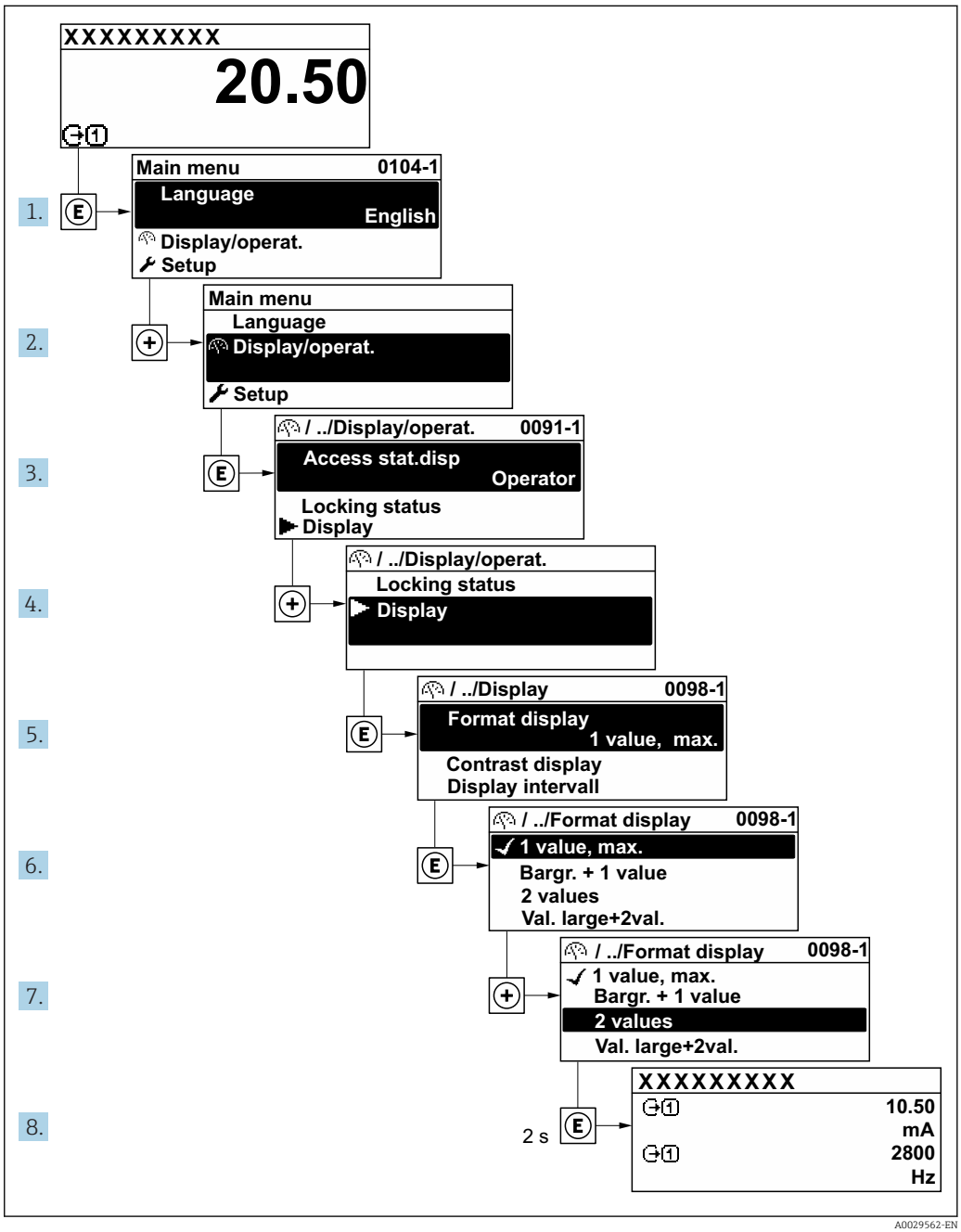

8.3.7 Calling the parameter directly

A parameter number is assigned to every parameter to be able to access a parameter directly via the onsite display. Entering this access code in the **Direct access** parameter calls up the desired parameter directly.

Navigation path
Expert → Direct access

The direct access code consists of a 4-digit number and the channel number, which identifies the channel of a process variable: e.g. 0914-1. In the navigation view, this appears on the right-hand side in the header of the selected parameter.

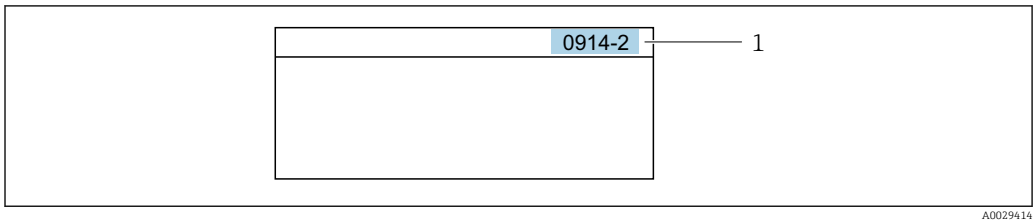

1 Direct access code

Note the following when entering the direct access code:
- The leading zeros in the direct access code do not have to be entered.
  Example: Input of **"914"** instead of **"0914"**
- If no channel number is entered, channel 1 is jumped to automatically.
  Example: Enter **0914** → **Assign process variable** parameter
- If a different channel is jumped to: Enter the direct access code with the corresponding channel number.
  Example: Enter **0914-2** → **Assign process variable** parameter

For the direct access codes of the individual parameters, see the "Description of Device Parameters" document for the device

8.3.8 Calling up help text

Help text is available for some parameters and can be called up from the navigation view. The help text provides a brief explanation of the parameter function and thereby supports swift and safe commissioning.

Calling up and closing the help text

The user is in the navigation view and the selection bar is on a parameter.

1. Press E for 2 s.
   ↳ The help text for the selected parameter opens.

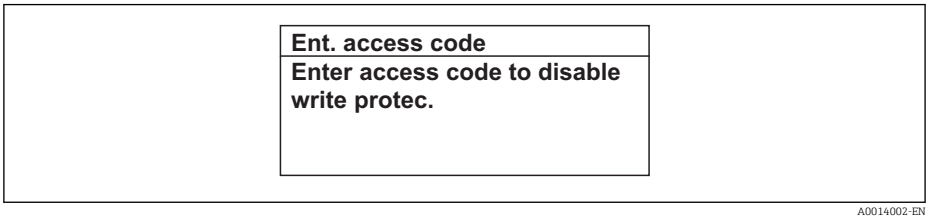

26 Example: Help text for parameter "Enter access code"

2. Press − + + simultaneously.
   ↳ The help text is closed.

8.3.9 Changing the parameters

For a description of the editing display - consisting of text editor and numeric editor - with symbols → 65, for a description of the operating elements → 66

Example: Changing the tag name in the "Tag description" parameter from 001-FT-101 to 001-FT-102

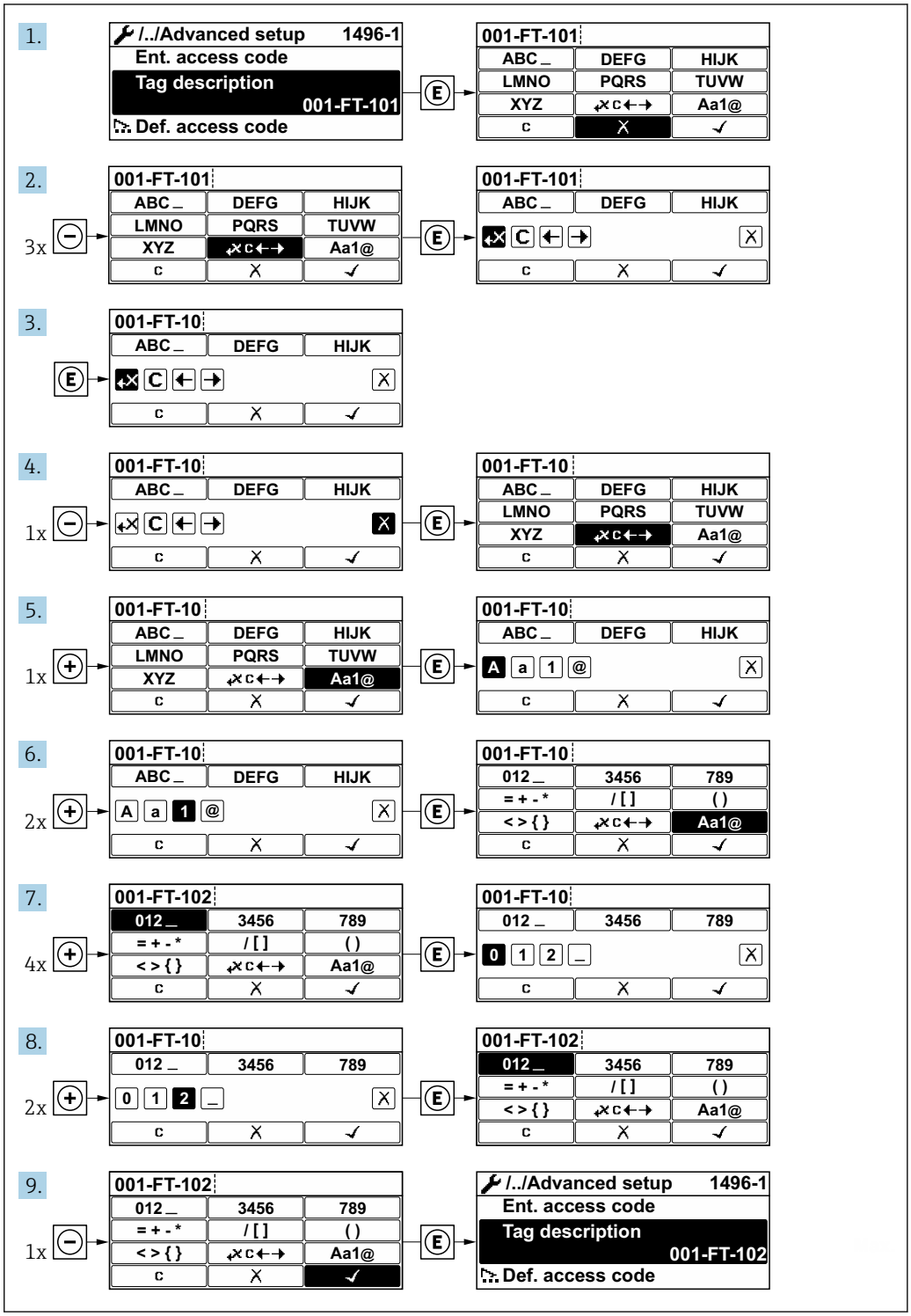

A message is displayed if the value entered is outside the permitted value range.

Ent. access code
Invalid or out of range input value Min:0 Max:9999

A0014049-EN

8.3.10 User roles and related access authorization

The two user roles "Operator" and "Maintenance" have different write access to the parameters if the customer defines a user-specific access code. This protects the device configuration via the local display from unauthorized access → 📄 136.

Access authorization to parameters: "Operator" user role

Access code status	Read access	Write access
An access code has not yet been defined (factory setting).	✔	✔
After an access code has been defined.	✔	–– [1]

1) Despite the defined access code, certain parameters can always be modified and thus are excepted from the write protection, as they do not affect the measurement. Refer to the "Write protection via access code" section

Access authorization to parameters: "Maintenance" user role

Access code status	Read access	Write access
An access code has not yet been defined (factory setting).	✔	✔
After an access code has been defined.	✔	✔ [1]

1) If an incorrect access code is entered, the user obtains the access rights of the "Operator" user role.

The user role with which the user is currently logged on is indicated by the **Access status** parameter. Navigation path: Operation → Access status

8.3.11 Disabling write protection via access code

If the 🔒-symbol appears on the local display in front of a parameter, the parameter is write-protected by a user-specific access code and its value cannot be changed at the moment using local operation → 📄 136.

Parameter write protection via local operation can be disabled by entering the user-specific access code in the **Enter access code** parameter (→ 📄 122) via the respective access option.

1. After you press E, the input prompt for the access code appears.
2. Enter the access code.
   ↳ The 🔒-symbol in front of the parameters disappears; all previously write-protected parameters are now re-enabled.

8.3.12 Enabling and disabling the keypad lock

The keypad lock makes it possible to block access to the entire operating menu via local operation. As a result, it is no longer possible to navigate through the operating menu or change the values of individual parameters. Users can only read the measured values on the operational display.

Local operation with touch control

The keypad lock is switched on and off via the context menu.

Switching on the keypad lock

The keypad lock is switched on automatically:
- Each time the device is restarted.
- If the device has not been operated for longer than one minute in the measured value display.

1. The device is in the measured value display.
   Press E for at least 2 seconds.
   ↳ A context menu appears.
2. In the context menu, select the **Keylock on** option.
   ↳ The keypad lock is switched on.

If the user attempts to access the operating menu while the keypad lock is active, the message **Keylock on** appears.

Switching off the keypad lock

1. The keypad lock is switched on.
   Press E for at least 2 seconds.
   ↳ A context menu appears.
2. In the context menu, select the **Keylock off** option.
   ↳ The keypad lock is switched off.

8.4 Access to the operating menu via the Web browser

8.4.1 Function range

Thanks to the integrated Web server, the device can be operated and configured via a Web browser and via a service interface (CDI-RJ45) or via a WLAN interface. The structure of the operating menu is the same as for the local display. In addition to the measured values, status information on the device is also displayed and allows the user to monitor the status of the device. Furthermore the device data can be managed and the network parameters can be configured.

A device that has a WLAN interface (can be ordered as an option) is required for the WLAN connection: order code for "Display; operation", option **G** "4-line, illuminated; touch control + WLAN". The device acts as an Access Point and enables communication by computer or a mobile handheld terminal.

For additional information on the Web server, refer to the Special Documentation for the device → 📄 227

8.4.2 Prerequisites

Computer hardware

Hardware	Interface	
	CDI-RJ45	WLAN
Interface	The computer must have an RJ45 interface.	The operating unit must have a WLAN interface.
Connection	Standard Ethernet cable with RJ45 connector.	Connection via Wireless LAN.
Screen	Recommended size: ≥12" (depends on the screen resolution)	

Computer software

Software	Interface	
	CDI-RJ45	WLAN
Recommended operating systems	▪ Microsoft Windows 7 or higher. ▪ Mobile operating systems: – iOS – Android Microsoft Windows XP is supported.	
Web browsers supported	▪ Microsoft Internet Explorer 8 or higher ▪ Microsoft Edge ▪ Mozilla Firefox ▪ Google Chrome ▪ Safari	

Computer settings

Settings	Interface	
	CDI-RJ45	WLAN
User rights	Appropriate user rights (e.g. administrator rights) for TCP/IP and proxy server settings are necessary (for adjusting the IP address, subnet mask etc.).	
Proxy server settings of the Web browser	The Web browser setting *Use a Proxy Server for Your LAN* must be **deselected** .	
JavaScript	JavaScript must be enabled. If JavaScript cannot be enabled: enter http://192.168.1.212/basic.html in the address line of the Web browser. A fully functional but simplified version of the operating menu structure starts in the Web browser. When installing a new firmware version: To enable correct data display, clear the temporary memory (cache) of the Web browser under **Internet options**.	
Network connections	Only the active network connections to the measuring device should be used.	
	Switch off all other network connections such as WLAN.	Switch off all other network connections.

In the event of connection problems: → 📄 151

Measuring device

Device	Interface	
	CDI-RJ45	WLAN
Measuring device	The measuring device has an RJ45 interface.	The measuring device has a WLAN antenna: ▪ Transmitter with integrated WLAN antenna ▪ Transmitter with external WLAN antenna
Web server	Web server must be enabled; factory setting: ON For information on enabling the Web server → 📄 79	Web server and WLAN must be enabled; factory setting: ON For information on enabling the Web server → 📄 79

8.4.3 Establishing a connection

Via service interface (CDI-RJ45)

Preparing the measuring device

Proline 500 – digital

1. Loosen the 4 fixing screws on the housing cover.
2. Open the housing cover.
3. The location of the connection socket depends on the measuring device and the communication protocol:
   Connect the computer to the RJ45 connector via the standard Ethernet connecting cable .

Proline 500

1. Depending on the housing version:
   Release the securing clamp or securing screw of the housing cover.
2. Depending on the housing version:
   Unscrew or open the housing cover.
3. The location of the connection socket depends on the measuring device and the communication protocol:
   Connect the computer to the RJ45 connector via the standard Ethernet connecting cable .

Configuring the Internet protocol of the computer

The following information refers to the default Ethernet settings of the device.

IP address of the device: 192.168.1.212 (factory setting)

1. Switch on the measuring device.
2. Connect to the computer using a cable → 📄 80.
3. If a 2nd network card is not used, close all the applications on the notebook.
   ↳ Applications requiring Internet or a network, such as e-mail, SAP applications, Internet or Windows Explorer.
4. Close any open Internet browsers.
5. Configure the properties of the Internet protocol (TCP/IP) as defined in the table:

IP address	192.168.1.XXX; for XXX all numerical sequences except: 0, 212 and 255 → e.g. 192.168.1.213
Subnet mask	255.255.255.0
Default gateway	192.168.1.212 or leave cells empty

Via WLAN interface

Configuring the Internet protocol of the mobile terminal

NOTICE

If the WLAN connection is lost during the configuration, settings made may be lost.

- Make sure that the WLAN connection is not disconnected while configuring the device.

NOTICE

In principle, avoid simultaneous access to the measuring device via the service interface (CDI-RJ45) and the WLAN interface from the same mobile terminal. This could cause a network conflict.

- Only activate one service interface (CDI-RJ45 service interface or WLAN interface).
- If simultaneous communication is necessary: configure different IP address ranges, e.g. 192.168.0.1 (WLAN interface) and 192.168.1.212 (CDI-RJ45 service interface).

Preparing the mobile terminal

- Enable WLAN reception on the mobile terminal.

Establishing a connection from the mobile terminal to the measuring device

1. In the WLAN settings of the mobile terminal:
   Select the measuring device using the SSID (e.g. EH_Promass_500_A802000).
2. If necessary, select the WPA2 encryption method.
3. Enter the password: serial number of the measuring device ex-works (e.g. L100A802000).
   ↳ LED on display module flashes: it is now possible to operate the measuring device with the Web browser, FieldCare or DeviceCare.

The serial number can be found on the nameplate.

Disconnecting

- After configuring the device:
  Terminate the WLAN connection between the operating unit and measuring device.

Starting the Web browser

1. Start the Web browser on the computer.

2. Enter the IP address of the Web server in the address line of the Web browser: 192.168.1.212
   ↳ The login page appears.

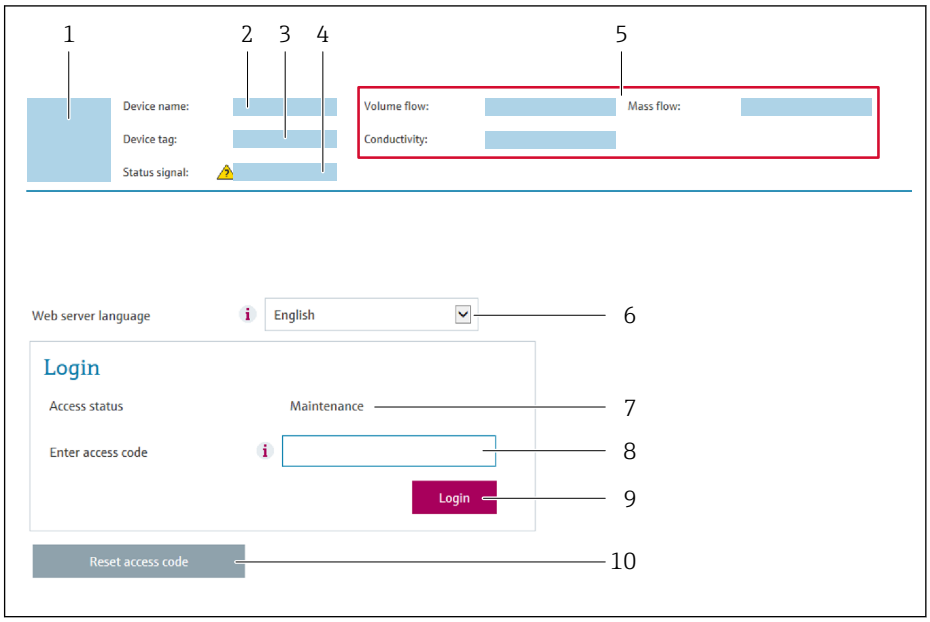

A0029417

1 *Picture of device*
2 *Device name*
3 *Device tag*
4 *Status signal*
5 *Current measured values*
6 *Operating language*
7 *User role*
8 *Access code*
9 *Login*
10 *Reset access code (→ 🗎 132)*

If a login page does not appear, or if the page is incomplete → 🗎 151

8.4.4 Logging on

1. Select the preferred operating language for the Web browser.
2. Enter the user-specific access code.
3. Press **OK** to confirm your entry.

Access code	0000 (factory setting); can be changed by customer

If no action is performed for 10 minutes, the Web browser automatically returns to the login page.

8.4.5 User interface

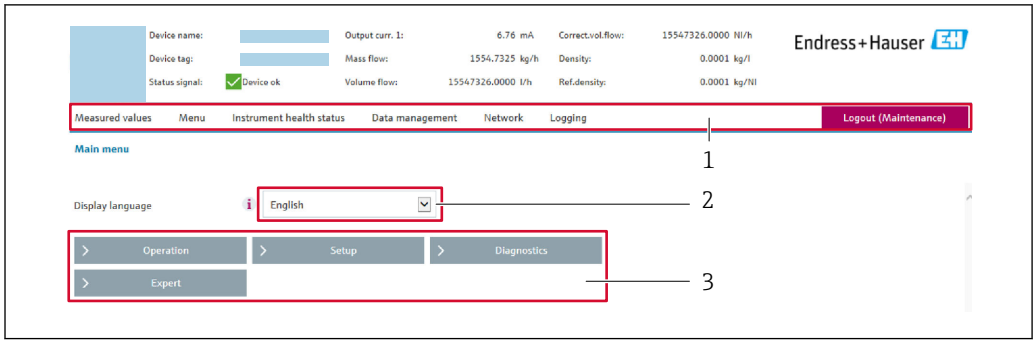

A0029418

1 *Function row*
2 *Operating language on the local display*
3 *Navigation area*

Header

The following information appears in the header:
- Device tag
- Device status with status signal → 📄 159
- Current measured values

Function row

Functions	Meaning
Measured values	Displays the measured values of the measuring device
Menu	▪ Access to the operating menu from the measuring device ▪ The structure of the operating menu is the same as for the local display For detailed information on the structure of the operating menu, see the Operating Instructions for the measuring device
Device status	Displays the diagnostic messages currently pending, listed in order of priority
Data management	▪ Data exchange between PC and measuring device: – Load the configuration from the measuring device (XML format, save configuration) – Save the configuration to the measuring device (XML format, restore configuration) – Export the event list (.csv file) – Export parameter settings (.csv file, create documentation of the measuring point configuration) – Export the Heartbeat verification log (PDF file, only available with the "Heartbeat Verification" application package) ▪ If using fieldbuses, upload device drivers for system integration from the measuring device: DD file ▪ Flashing a firmware version
Network configuration	Configuration and checking of all the parameters required for establishing the connection to the measuring device: ▪ Network settings (e.g. IP address, MAC address) ▪ Device information (e.g. serial number, firmware version)
Logout	End the operation and call up the login page

Navigation area

If a function is selected in the function bar, the submenus of the function open in the navigation area. The user can now navigate through the menu structure.

Working area

Depending on the selected function and the related submenus, various actions can be performed in this area:
- Configuring parameters
- Reading measured values
- Calling up help text
- Starting an upload/download

8.4.6 Disabling the Web server

The Web server of the measuring device can be switched on and off as required using the **Web server functionality** parameter.

Navigation
"Expert" menu → Communication → Web server

Parameter overview with brief description

Parameter	Description	Selection	Factory setting
Web server functionality	Switch the Web server on and off.	▪ Off ▪ On	On

Function scope of the "Web server functionality" parameter

Option	Description
Off	▪ The web server is completely disabled. ▪ Port 80 is locked.
On	▪ The complete functionality of the web server is available. ▪ JavaScript is used. ▪ The password is transferred in an encrypted state. ▪ Any change to the password is also transferred in an encrypted state.

Enabling the Web server

If the Web server is disabled it can only be re-enabled with the **Web server functionality** parameter via the following operating options:
- Via local display
- Via Bedientool "FieldCare"
- Via "DeviceCare" operating tool

8.4.7 Logging out

Before logging out, perform a data backup via the **Data management** function (upload configuration from device) if necessary.

1. Select the **Logout** entry in the function row.
   ↳ The home page with the Login box appears.
2. Close the Web browser.
3. If no longer needed:
   Reset modified properties of the Internet protocol (TCP/IP) → 📄 75.

8.5 Access to the operating menu via the operating tool

The structure of the operating menu in the operating tools is the same as for operation via the local display.

8.5.1 Connecting the operating tool

Via FOUNDATION Fieldbus network

This communication interface is available in device versions with FOUNDATION Fieldbus.

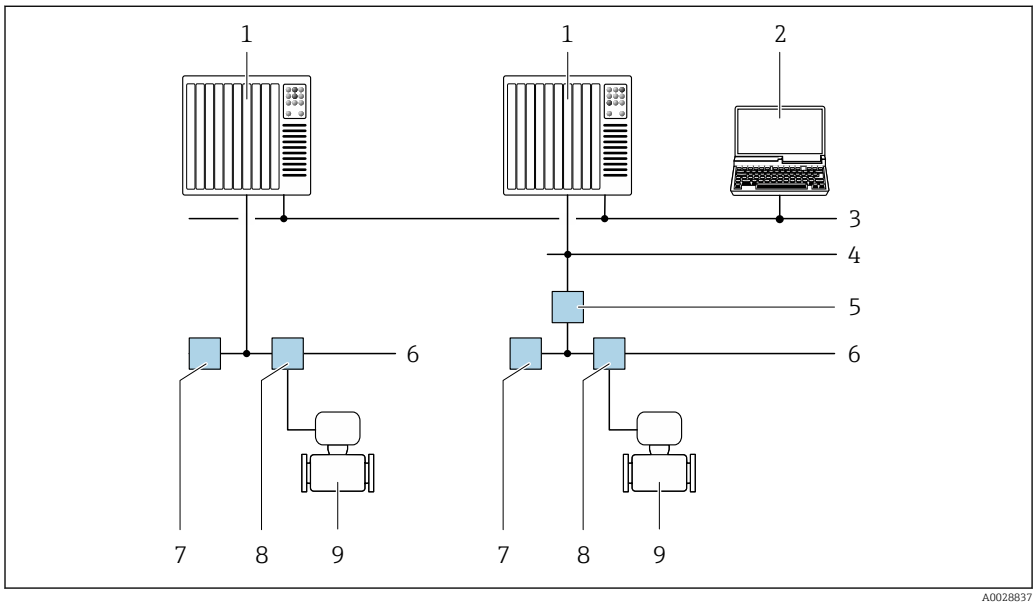

27 *Options for remote operation via FOUNDATION Fieldbus network*

1 *Automation system*
2 *Computer with FOUNDATION Fieldbus network card*
3 *Industry network*
4 *High Speed Ethernet FF-HSE network*
5 *Segment coupler FF-HSE/FF-H1*
6 *FOUNDATION Fieldbus FF-H1 network*
7 *Power supply FF-H1 network*
8 *T-box*
9 *Measuring device*

Service interface

Via service interface (CDI-RJ45)

Proline 500 – digital transmitter

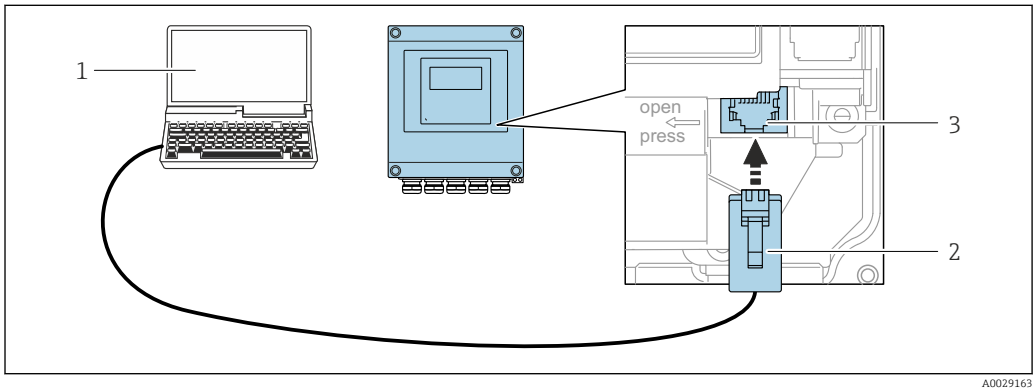

28 *Connection via service interface (CDI-RJ45)*

1 *Computer with Web browser (e.g. Microsoft Internet Explorer, Microsoft Edge) for accessing the integrated device Web server or with "FieldCare", "DeviceCare" operating tool with COM DTM "CDI Communication TCP/IP"*
2 *Standard Ethernet connecting cable with RJ45 connector*
3 *Service interface (CDI-RJ45) of the measuring device with access to the integrated Web server*

Proline 500 transmitter

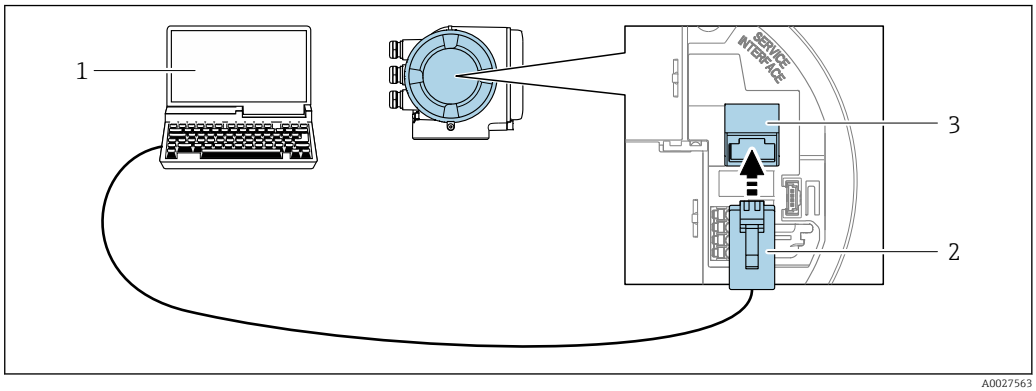

29 Connection via service interface (CDI-RJ45)

1. *Computer with Web browser (e.g. Microsoft Internet Explorer, Microsoft Edge) for accessing the integrated device Web server or with "FieldCare", "DeviceCare" operating tool with COM DTM "CDI Communication TCP/IP"*
2. *Standard Ethernet connecting cable with RJ45 connector*
3. *Service interface (CDI-RJ45) of the measuring device with access to the integrated Web server*

Via WLAN interface

The optional WLAN interface is available on the following device version:
Order code for "Display; operation", option **G** "4-line, backlit, graphic display; touch control + WLAN"

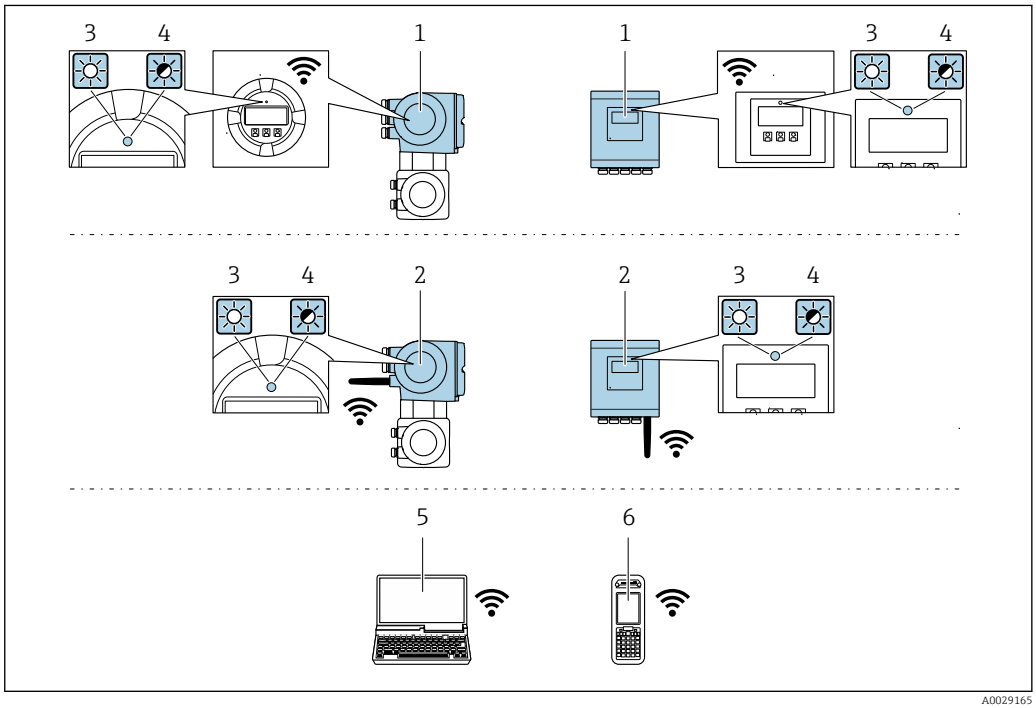

1. *Transmitter with integrated WLAN antenna*
2. *Transmitter with external WLAN antenna*
3. *LED lit constantly: WLAN reception is enabled on measuring device*
4. *LED flashing: WLAN connection established between operating unit and measuring device*
5. *Computer with WLAN interface and Web browser (e.g. Microsoft Internet Explorer, Microsoft Edge) for accessing the integrated device Web server or with operating tool (e.g. FieldCare, DeviceCare)*
6. *Mobile handheld terminal with WLAN interface and Web browser (e.g. Microsoft Internet Explorer, Microsoft Edge) for accessing the integrated device Web server or operating tool (e.g. FieldCare, DeviceCare)*

Wireless LAN	IEEE 802.11 b/g (2.4 GHz) WLAN
Encryption	WPA2 PSK/TKIP AES-128

Configurable channels	1 to 11
Function	Access point with DHCP
Range with integrated antenna	Max. 10 m (32 ft)
Range with external antenna	Max. 50 m (164 ft)

Configuring the Internet protocol of the mobile terminal

NOTICE

If the WLAN connection is lost during the configuration, settings made may be lost.

- Make sure that the WLAN connection is not disconnected while configuring the device.

NOTICE

In principle, avoid simultaneous access to the measuring device via the service interface (CDI-RJ45) and the WLAN interface from the same mobile terminal. This could cause a network conflict.

- Only activate one service interface (CDI-RJ45 service interface or WLAN interface).
- If simultaneous communication is necessary: configure different IP address ranges, e.g. 192.168.0.1 (WLAN interface) and 192.168.1.212 (CDI-RJ45 service interface).

Preparing the mobile terminal

- Enable WLAN reception on the mobile terminal.

Establishing a connection from the mobile terminal to the measuring device

1. In the WLAN settings of the mobile terminal:
   Select the measuring device using the SSID (e.g. EH_Promass_500_A802000).
2. If necessary, select the WPA2 encryption method.
3. Enter the password: serial number of the measuring device ex-works (e.g. L100A802000).
   ↳ LED on display module flashes: it is now possible to operate the measuring device with the Web browser, FieldCare or DeviceCare.

The serial number can be found on the nameplate.

Disconnecting

- After configuring the device:
  Terminate the WLAN connection between the operating unit and measuring device.

8.5.2 Field Xpert SFX350, SFX370

Function scope

Field Xpert SFX350 and Field Xpert SFX370 are mobile computers for commissioning and maintenance. They enable efficient device configuration and diagnostics for HART and FOUNDATION fieldbus devices in the **non-Ex area** (SFX350, SFX370) and the **Ex area** (SFX370).

For details, see Operating Instructions BA01202S

Source for device description files

See data → 86

8.5.3 FieldCare

Function scope

FDT-based plant asset management tool from Endress+Hauser. It can configure all smart field devices in a system and helps you manage them. By using the status information, it is also a simple but effective way of checking their status and condition.

Access is via:
- CDI-RJ45 service interface → 80
- WLAN interface→ 81

Typical functions:
- Configuring parameters of transmitters
- Loading and saving device data (upload/download)
- Documentation of the measuring point
- Visualization of the measured value memory (line recorder) and event logbook

For additional information about FieldCare, see Operating Instructions BA00027S and BA00059S

Source for device description files

See information → 86

Establishing a connection

For additional information, see Operating Instructions BA00027S and BA00059S

User interface

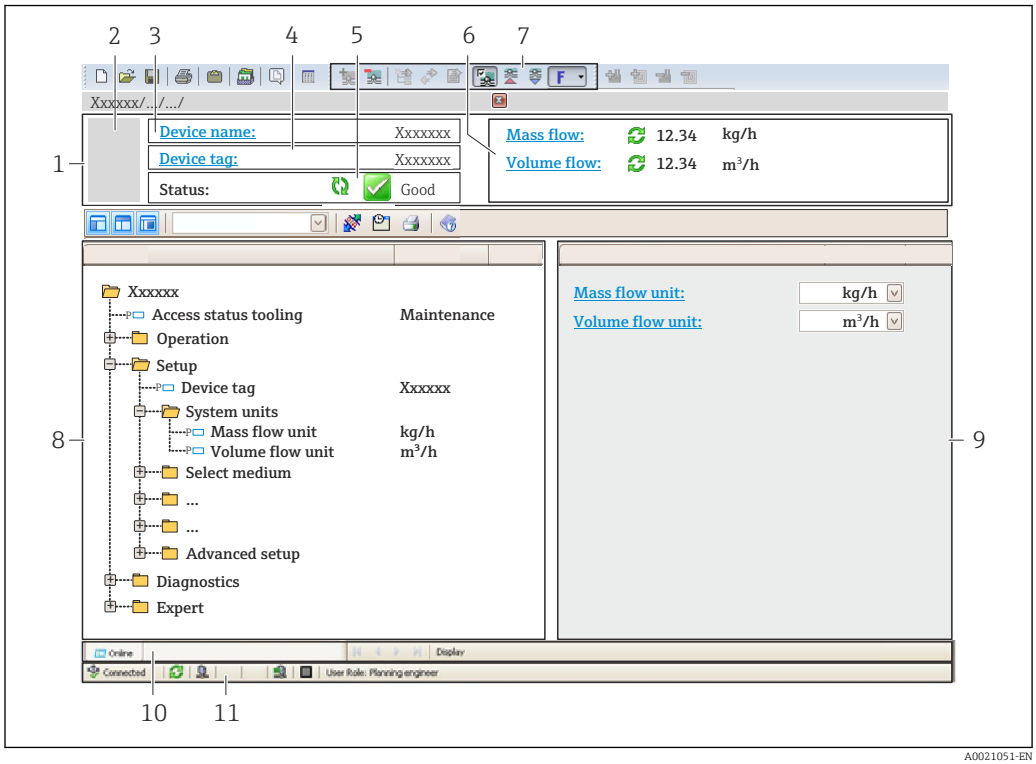

A0021051-EN

1 *Header*
2 *Picture of device*
3 *Device name*
4 *Tag name*
5 *Status area with status signal→ 159*
6 *Display area for current measured values*
7 *Edit toolbar with additional functions such as save/restore, event list and create documentation*
8 *Navigation area with operating menu structure*
9 *Working area*
10 *Range of action*
11 *Status area*

8.5.4 DeviceCare

Function scope

Tool to connect and configure Endress+Hauser field devices.

The fastest way to configure Endress+Hauser field devices is with the dedicated "DeviceCare" tool. Together with the device type managers (DTMs) it presents a convenient, comprehensive solution.

For details, see Innovation Brochure IN01047S

Source for device description files

See information → 86

8.5.5 AMS Device Manager

Function scope

Program from Emerson Process Management for operating and configuring measuring devices via FOUNDATION Fieldbus H1 protocol.

Source for device description files

See data → 🗎 86

8.5.6 Field Communicator 475

Function scope

Industrial handheld terminal from Emerson Process Management for remote configuration and measured value display via FOUNDATION Fieldbus H1 protocol.

Source for device description files

See data → 🗎 86

9 System integration

9.1 Overview of device description files

9.1.1 Current version data for the device

Firmware version	01.00.zz	▪ On the title page of the Operating instructions ▪ On the transmitter nameplate ▪ Firmware version Diagnostics → Device information → Firmware version
Release date of firmware version	02.2017	---
Manufacturer ID	0x452B48 (hex)	Manufacturer ID Diagnostics → Device information → Manufacturer ID
Device type ID	0x103B (hex)	Device type Diagnostics → Device information → Device type
Device revision	1	▪ On the transmitter nameplate ▪ Device revision Diagnostics → Device information → Device revision
DD revision	Information and files under: ▪ www.endress.com ▪ www.fieldbus.org	
CFF revision		

For an overview of the different firmware versions for the device → 📖 192

9.1.2 Operating tools

The suitable device description file for the individual operating tools is listed in the table below, along with information on where the file can be acquired.

Operating tool via FOUNDATION Fieldbus	Sources for obtaining device descriptions
FieldCare	▪ www.endress.com → Download Area ▪ CD-ROM (contact Endress+Hauser) ▪ DVD (contact Endress+Hauser)
DeviceCare	▪ www.endress.com → Download Area ▪ CD-ROM (contact Endress+Hauser) ▪ DVD (contact Endress+Hauser)
▪ Field Xpert SFX350 ▪ Field Xpert SFX370	Use update function of handheld terminal
AMS Device Manager (Emerson Process Management)	www.endress.com → Download Area
Field Communicator 475 (Emerson Process Management)	Use update function of handheld terminal

9.2 Cyclic data transmission

Cyclic data transmission when using the device master file (GSD).

9.2.1 Block model

The block model shows which input and output data the measuring device makes available for cyclic data exchange. Cyclic data exchange takes place with a FOUNDATION Fieldbus master (Class 1), e.g. a control system etc.

Display text (xxxx... = serial number)	Base index	Description
RESOURCE_ xxxxxxxxxxx	400	Resource block
SETUP_ xxxxxxxxxxx	600	"Setup" Transducer block
TRDDISP_ xxxxxxxxxxx	800	"Display" Transducer block
TRDHROM_ xxxxxxxxxxx	1000	"HistoROM" Transducer block
TRDDIAG_ xxxxxxxxxxx	1200	"Diagnostic" Transducer block
EXPERT_CONFIG_xxxxxxxxxxx	1400	"Expert configuration" Transducer block
SERVICE_SENSOR_xxxxxxxxxxx	1600	"Service sensor" Transducer block
TRDTIC_xxxxxxxxxxx	1800	"Totalizer" Transducer block
TRDHBT_ xxxxxxxxxxx	2000	Transducer block “Heartbeat results“
ANALOG_INPUT_1_xxxxxxxxxxx	3400	Analog Input function block 1 (AI)
ANALOG_INPUT_2_xxxxxxxxxxx	3600	Analog Input function block 2 (AI)
ANALOG_INPUT_3_xxxxxxxxxxx	3800	Analog Input function block 3 (AI)
ANALOG_INPUT_4_xxxxxxxxxxx	4000	Analog Input function block 4 (AI)
ANALOG_INPUT_5_xxxxxxxxxxx	4200	Analog Input function block 5 (AI)
ANALOG_INPUT_6_xxxxxxxxxxx	4400	Analog Input function block 6 (AI)
ANALOG_INPUT_7_xxxxxxxxxxx	4600	Analog Input function block 7 (AI)
ANALOG_INPUT_8_xxxxxxxxxxx	4800	Analog Input function block 8 (AI)
MAO_ xxxxxxxxxxx	5000	Multiple Analog Output block (MAO)
DIGITAL_INPUT_1_ xxxxxxxxxxx	5200	Digital Input function block 1 (DI)
DIGITAL_INPUT_2_ xxxxxxxxxxx	5400	Digital Input function block 2 (DI)
MDO_ xxxxxxxxxxx	5600	Multiple Digital Output block (MDO)
PID_ xxxxxxxxxxx	5800	PID function block (PID)
INTEGRATOR_xxxxxxxxxxx	6000	Integrator function block (INTG)

9.2.2 Description of the modules

The input value of a module/function block is defined via the CHANNEL parameter.

AI module (Analog Input)

Eight Analog Input blocks are available.

CHANNEL	Measured variable
0	Uninitialized (factory setting)
7	Temperature
9	Volume flow
10	Concentration [1)]
11	Mass flow
13	Corrected volume flow
14	Density
15	Reference density
16	Totalizer 1
17	Totalizer 2
18	Totalizer 3
33	Oscillation frequency [1)]

CHANNEL	Measured variable
43	Frequency fluctuation [1]
51	Carrier pipe temperature [1]
57	Carrier mass flow [1]
58	Target mass flow [1]
63	Oscillation damping [1]
65	Electronic temperature
66	Tube damping fluctuation [1]
68	Exciter current [1]
81	HBSI [1]
99	Current input 1 [1]

1) Visible depending on the order options or device settings

MAO module (Multiple Analog Output)

Channel	Description
121	Channel_0

Structure

Channel_0							
Value 1	Value 2	Value 3	Value 4	Value 5	Value 6	Value 7	Value 8

Values	Measured variable
Value 1	External pressure [1]
Value 2	External temperature [1]
Value 3	External reference density [1]
Value 4	Not assigned
Value 5	Not assigned
Value 6	Not assigned
Value 7	Not assigned
Value 8	Not assigned

1) The external measured values must be transmitted to the device in the SI basic unit

The selection is made via: Expert → Sensor → External compensation

DI module (Discrete Input)

Two Discrete Input blocks are available.

CHANNEL	Device function	State
0	Uninitialized (factory setting)	–
101	Switch output state	0 = off, 1 = active
103	Low flow cut off	0 = off, 1 = active

CHANNEL	Device function	State
104	Empty pipe detection	0 = off, 1 = active
105	Verification status [1]	**Overall result of the verification** Verification: ▪ 16 = Failed ▪ 32 = Passed ▪ 64 = Not performed **Verification status** Verification: ▪ 1 = Not performed ▪ 2 = Failed ▪ 4 = Being performed ▪ 8 = Finished **Status; result** ▪ 17 = Status: not performed; Result: failed ▪ 18 = Status: failed; Result: failed ▪ 20 = Status: being performed; Result: failed ▪ 24 = Status: finished; Result: failed ▪ 33 = Status: not performed; Result: passed ▪ 34 = Status: failed; Result: passed ▪ 36 = Status: being performed; Result: passed ▪ 40 = Status: finished; Result: passed ▪ 65 = Status: not performed; Result: not performed ▪ 66 = Status: failed; Result: not performed ▪ 68 = Status: being performed; Result: not performed ▪ 72 = Status: finished; Result: not performed

1) Only available with the Heartbeat Verification application package

MDO module (Multiple Discrete Output)

Channel	Description
122	Channel_DO

Structure

Channel_DO							
Value 1	Value 2	Value 3	Value 4	Value 5	Value 6	Value 7	Value 8

Value	Device function	State
Value 1	Reset totalizer 1	0 = off, 1 = execute
Value 2	Reset totalizer 2	0 = off, 1 = execute
Value 3	Reset totalizer 3	0 = off, 1 = execute
Value 4	Flow override	0 = off, 1 = active
Value 5	Start heartbeat verification [1]	0 = off, 1 = start
Value 6	Status output	0 = off, 1 = active

Value	Device function	State
Value 7	Zero point adjustment	0 = off, 1 = on
Value 8	Not assigned	–

1) Only available with the Heartbeat Verification application package

9.2.3 Execution times

Function block	Execution time (ms)
Analog Input function block (AI)	6
Digital Input function block (DI)	4
PID function block (PID)	5
Multiple Analog Output block (MAO)	4
Multiple Digital Output block (MDO)	4
Integrator function block (INTG)	5

9.2.4 Methods

Method	Block	Navigation	Description
Set to "AUTO" mode	Resource Block	Via menu: Expert → Communication → Resource block → Target mode	This method sets the Resource Block and all the Transducer Blocks to the AUTO (Automatic) mode.
Set to "OOS" mode	Resource Block	Via menu: Expert → Communication → Resource block → Target mode	This method sets the Resource Block and all the Transducer Blocks to the OOS (Out of service) mode.
Restart	Resource Block	Via menu: Expert → Communication → Resource block → Restart	This method is used for selecting the setting for the restart parameter in the Resource Block. This resets device parameters to a specific value. The following options are supported: ▪ Uninitialized ▪ Run ▪ Resource ▪ Defaults ▪ Processor ▪ To delivery settings
ENP parameter	Resource Block	Via menu: Actions → Methods→ Calibrate → ENP parameter	This method is used to display and configure the parameters of the electronic nameplate (ENP).
Overview diagnostics - Remedy information	Diagnostic Transducer Block	Via link: Namur symbol	This method is used to display the diagnostic event with the highest priority that is currently active and the corresponding remedial measures.
Actual diagnostics – Remedy information	Diagnostic Transducer Block	Via menu: – Configure/Setup → Diagnostics → Actual diagnostics – Device/Diagnostics → Diagnostics	This method is used to display remedial measures for the diagnostic event with the highest priority that is currently active. This method is only available if an appropriate diagnostic event has occurred.
Previous diagnostics – Remedy information	Diagnostic Transducer Block	Via menu: – Configure/Setup → Diagnostics → Previous diagnostics – Device/Diagnostics → Diagnostics	This method is used to display remedial measures for the previous diagnostic event. This method is only available if an appropriate diagnostic event has occurred.

10 Commissioning

10.1 Function check

Before commissioning the measuring device:

▶ Make sure that the post-installation and post-connection checks have been performed.

- "Post-installation check" checklist → 📄 33
- "Post-connection check" checklist → 📄 57

10.2 Switching on the measuring device

▶ After a successful function check, switch on the measuring device.
  ↳ After a successful startup, the local display switches automatically from the startup display to the operational display.

ℹ If nothing appears on the local display or a diagnostic message is displayed, refer to the section on "Diagnostics and troubleshooting" → 📄 150.

10.3 Connecting via FieldCare

- For FieldCare → 📄 80 connection
- For connecting via FieldCare → 📄 83
- For the FieldCare → 📄 84 user interface

10.4 Setting the operating language

Factory setting: English or ordered local language

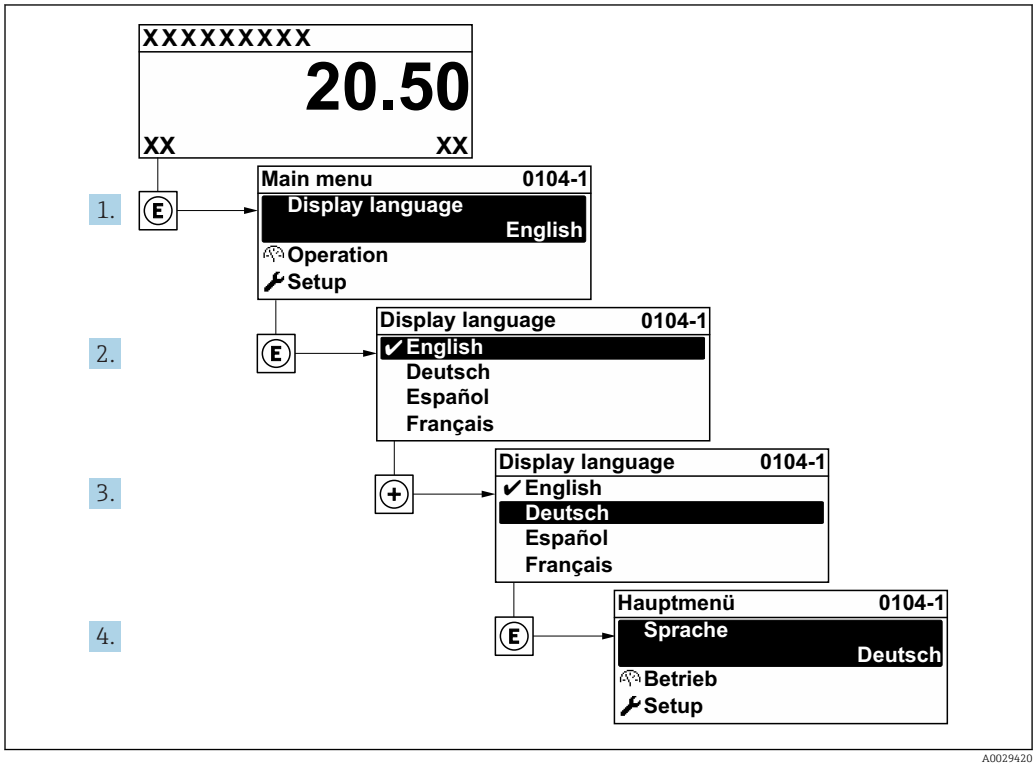

30 *Taking the example of the local display*

10.5 Configuring the measuring device

- The **Setup** menuwith its guided wizards contains all the parameters needed for standard operation.
- Navigation to the **Setup** menu

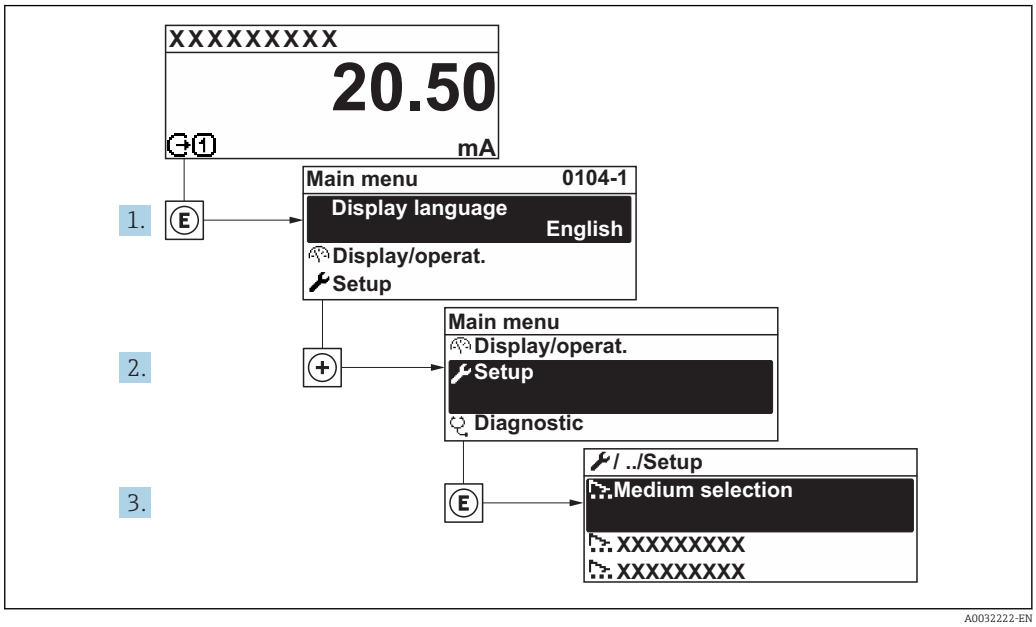

31 *Taking the example of the local display*

Depending on the device version, not all submenus and parameters are available in every device. The selection can vary depending on the order code.

Setup	
Device tag	→ 94
▶ System units	→ 94
▶ Medium selection	→ 97
▶ Analog inputs	→ 99
▶ I/O configuration	→ 100
▶ Current input 1	→ 100
▶ Status input 1	→ 101
▶ Current output 1	→ 102
▶ Pulse/frequency/switch output 1	→ 105
▶ Relay output 1	→ 114
▶ Display	→ 116

▶ Low flow cut off	→ 📄 119
▶ Partially filled pipe detection	→ 📄 120
▶ Advanced setup	→ 📄 121

10.5.1 Defining the tag name

To enable fast identification of the measuring point within the system, you can enter a unique designation using the **Device tag** parameter and thus change the factory setting.

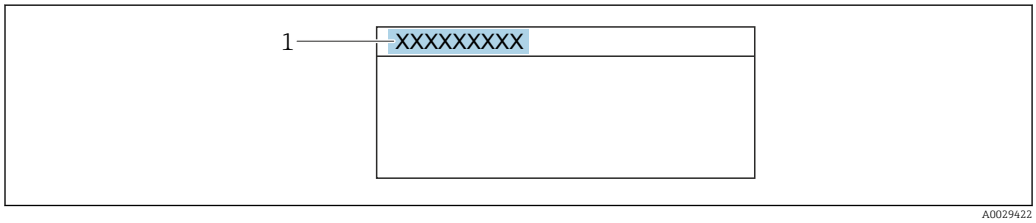

32 Header of the operational display with tag name

1 Tag name

Enter the tag name in the "FieldCare" operating tool → 📄 84

Navigation

"Setup" menu → Device tag

Parameter overview with brief description

Parameter	Description	User entry	Factory setting
Device tag	Enter the name for the measuring point.	32 characters such as letters, numbers or special characters (e.g. @, %, /)	Promass300/500

10.5.2 Setting the system units

In the **System units** submenu the units of all the measured values can be set.

Depending on the device version, not all submenus and parameters are available in every device. The selection can vary depending on the order code.

Navigation

"Setup" menu → System units

▶ System units	
Mass flow unit	→ 📄 95
Mass unit	→ 📄 95
Volume flow unit	→ 📄 95

Volume unit	→ 95
Corrected volume flow unit	→ 95
Corrected volume unit	→ 95
Density unit	→ 95
Reference density unit	→ 95
Temperature unit	→ 96
Pressure unit	→ 96

Parameter overview with brief description

Parameter	Description	Selection	Factory setting
Mass flow unit	Select mass flow unit. *Result* The selected unit applies for: ▪ Output ▪ Low flow cut off ▪ Simulation process variable	Unit choose list	Country-specific: ▪ kg/h ▪ lb/min
Mass unit	Select mass unit.	Unit choose list	Country-specific: ▪ kg ▪ lb
Volume flow unit	Select volume flow unit. *Result* The selected unit applies for: ▪ Output ▪ Low flow cut off ▪ Simulation process variable	Unit choose list	Country-specific: ▪ l/h ▪ gal/min (us)
Volume unit	Select volume unit.	Unit choose list	Country-specific: ▪ l (DN > 150 (6"): m^3) ▪ gal (us)
Corrected volume flow unit	Select corrected volume flow unit. *Result* The selected unit applies for: **Corrected volume flow** parameter (→ 141)	Unit choose list	Country-specific: ▪ Nl/h ▪ Sft^3/min
Corrected volume unit	Select corrected volume unit.	Unit choose list	Country-specific: ▪ Nl ▪ Sft^3
Density unit	Select density unit. *Result* The selected unit applies for: ▪ Output ▪ Simulation process variable ▪ Density adjustment (**Expert** menu)	Unit choose list	Country-specific: ▪ kg/l ▪ lb/ft^3
Reference density unit	Select reference density unit.	Unit choose list	Country-dependent ▪ kg/Nl ▪ lb/Sft^3

Parameter	Description	Selection	Factory setting
Temperature unit	Select temperature unit. *Result* The selected unit applies for: ▪ **Electronic temperature** parameter (6053) ▪ **Maximum value** parameter (6051) ▪ **Minimum value** parameter (6052) ▪ **Maximum value** parameter (6108) ▪ **Minimum value** parameter (6109) ▪ **Carrier pipe temperature** parameter (6027) ▪ **Maximum value** parameter (6029) ▪ **Minimum value** parameter (6030) ▪ **Reference temperature** parameter (1816) ▪ **Temperature** parameter	Unit choose list	Country-specific: ▪ ℃ ▪ ℉
Pressure unit	Select process pressure unit. *Result* The unit is taken from: ▪ **Pressure value** parameter (→ 🗎 98) ▪ **External pressure** parameter (→ 🗎 98) ▪ Pressure value	Unit choose list	Country-specific: ▪ bar a ▪ psi a

10.5.3 Selecting and setting the medium

The **Select medium** wizard submenu contains parameters that must be configured in order to select and set the medium.

Navigation
"Setup" menu → Select medium

▶ **Medium selection**	
Select medium	→ 📄 98
Select gas type	→ 📄 98
Reference sound velocity	→ 📄 98
Temperature coefficient sound velocity	→ 📄 98
Pressure compensation	→ 📄 98
Pressure value	→ 📄 98
External pressure	→ 📄 98

Parameter overview with brief description

Parameter	Prerequisite	Description	Selection / User entry / User interface	Factory setting
Select medium	–	Select medium type.	▪ Liquid ▪ Gas	Liquid
Select gas type	The **Gas** option is selected in the **Select medium** parameter.	Select measured gas type.	▪ Air ▪ Ammonia NH3 ▪ Argon Ar ▪ Sulfur hexafluoride SF6 ▪ Oxygen O2 ▪ Ozone O3 ▪ Nitrogen oxide NOx ▪ Nitrogen N2 ▪ Nitrous oxide N2O ▪ Methane CH4 ▪ Hydrogen H2 ▪ Helium He ▪ Hydrogen chloride HCl ▪ Hydrogen sulfide H2S ▪ Ethylene C2H4 ▪ Carbon dioxide CO2 ▪ Carbon monoxide CO ▪ Chlorine Cl2 ▪ Butane C4H10 ▪ Propane C3H8 ▪ Propylene C3H6 ▪ Ethane C2H6 ▪ Others	Methane CH4
Reference sound velocity	In the **Select gas type** parameter, the **Others** option is selected.	Enter sound velocity of gas at 0 °C (32 °F).	1 to 99 999.9999 m/s	415.0 m/s
Temperature coefficient sound velocity	The **Others** option is selected in the **Select gas type** parameter.	Enter temperature coefficient for the gas sound velocity.	Positive floating-point number	0 (m/s)/K
Pressure compensation	–	Select pressure compensation type.	▪ Off ▪ Fixed value ▪ External value ▪ Current input 1 *	Off
Pressure value	The **Fixed value** option is selected in the **Pressure compensation** parameter.	Enter process pressure to be used for pressure correction.	Positive floating-point number	0 bar
External pressure	The **External value** option is selected in the **Pressure compensation** parameter.	Shows the external process pressure value.	Positive floating-point number	0 bar

* Visibility depends on order options or device settings

10.5.4 Configuring the analog inputs

The **Analog inputs** submenu guides the user systematically to the individual **Analog input 1 to n** submenu. From here you get to the parameters of the individual analog input.

Navigation
"Setup" menu → Analog inputs

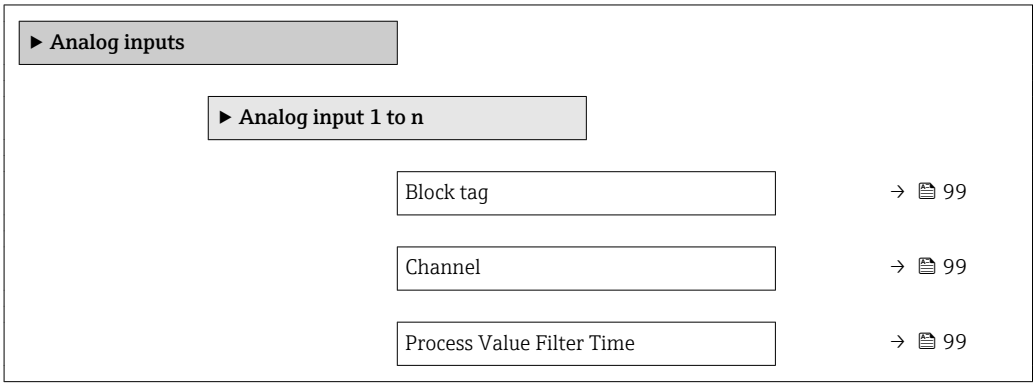

Parameter overview with brief description

Parameter	Description	User entry / Selection	Factory setting
Block tag	Unique name of the measuring device.	Max. 32 characters such as letters, numbers or special characters (e.g. @, %, /).	–
Channel	Select the process variable.	▪ Mass flow ▪ Volume flow ▪ Corrected volume flow ▪ Target mass flow * ▪ Carrier mass flow * ▪ Density ▪ Reference density ▪ Concentration * ▪ Temp. compensated dynamic viscosity ▪ Temperature ▪ Carrier pipe temperature * ▪ Electronic temperature ▪ Oscillation frequency 0 ▪ Oscillation amplitude 0 ▪ Frequency fluctuation 0 ▪ Oscillation damping 0 ▪ Oscillation damping fluctuation 0 ▪ Signal asymmetry ▪ Exciter current 0 ▪ HBSI * ▪ Totalizer 1 ▪ Totalizer 2 ▪ Totalizer 3 ▪ Current input 1 * ▪ Uninitialized	Uninitialized
Process Value Filter Time	Enter the filter time specification for the filtering of the unconverted input value (PV).	Positive floating-point number	0 s

* Visibility depends on order options or device settings

10.5.5 Displaying the I/O configuration

The **I/O configuration** submenu guides the user systematically through all the parameters in which the configuration of the I/O modules is displayed.

Navigation
"Setup" menu → I/O configuration

▶ **I/O configuration**

I/O module 1 to n terminal numbers	→ 100
I/O module 1 to n information	→ 100
I/O module 1 to n type	→ 100
Apply I/O configuration	→ 100
Conversion code	→ 100

Parameter overview with brief description

Parameter	Description	User interface / Selection / User entry	Factory setting
I/O module terminal numbers	Shows the terminal numbers used by the I/O module.	▪ Not used ▪ 26-27 (I/O 1) ▪ 24-25 (I/O 2)	–
I/O module information	Shows information of the plugged I/O module.	▪ Not plugged ▪ Invalid ▪ Not configurable ▪ Configurable ▪ Fieldbus	–
I/O module type	Shows the I/O module type.	▪ Off ▪ Current output * ▪ Current input * ▪ Status input * ▪ Pulse/frequency/switch output *	Off
Apply I/O configuration	Apply parameterization of the freely configurable I/O module.	▪ No ▪ Yes	No
Conversion code	Enter the code in order to change the I/O configuration.	Positive integer	0

* Visibility depends on order options or device settings

10.5.6 Configuring the current input

The **"Current input" wizard** guides the user systematically through all the parameters that have to be set for configuring the current input.

Navigation
"Setup" menu → Current input

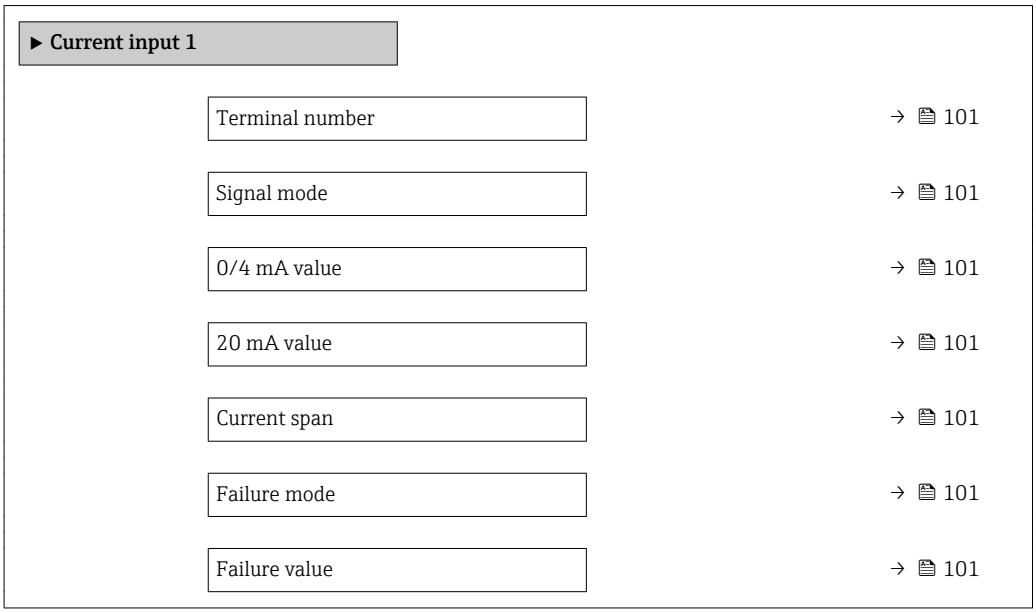

Parameter overview with brief description

Parameter	Prerequisite	Description	User interface / Selection / User entry	Factory setting
Terminal number	–	Shows the terminal numbers used by the current input module.	▪ Not used ▪ 24-25 (I/O 2)	–
Signal mode	The measuring device is **not** approved for use in the hazardous area with type of protection Ex-i.	Select the signal mode for the current input.	▪ Passive ▪ Active	Passive
0/4 mA value	–	Enter 4 mA value.	Signed floating-point number	0
20 mA value	–	Enter 20 mA value.	Signed floating-point number	Depends on country and nominal diameter
Current span	–	Select current range for process value output and upper/lower level for alarm signal.	▪ 4...20 mA ▪ 4...20 mA NAMUR ▪ 4...20 mA US ▪ 0...20 mA	Country-specific: ▪ 4...20 mA NAMUR ▪ 4...20 mA US
Failure mode	–	Define input behavior in alarm condition.	▪ Alarm ▪ Last valid value ▪ Defined value	Alarm
Failure value	In the **Failure mode** parameter, the **Defined value** option is selected.	Enter value to be used by the device if input value from external device is missing.	Signed floating-point number	0

10.5.7 Configuring the status input

The **Status input** submenu guides the user systematically through all the parameters that have to be set for configuring the status input.

Navigation
"Setup" menu → Status input

▶ Status input 1 to n	
Assign status input	→ 📄 102
Terminal number	→ 📄 102
Active level	→ 📄 102
Terminal number	→ 📄 102
Response time status input	→ 📄 102
Terminal number	→ 📄 102

Parameter overview with brief description

Parameter	Description	User interface / Selection / User entry	Factory setting
Terminal number	Shows the terminal numbers used by the status input module.	▪ Not used ▪ 24-25 (I/O 2)	–
Assign status input	Select function for the status input.	▪ Off ▪ Reset totalizer 1 ▪ Reset totalizer 2 ▪ Reset totalizer 3 ▪ Reset all totalizers ▪ Flow override	Off
Active level	Define input signal level at which the assigned function is triggered.	▪ High ▪ Low	High
Response time status input	Define the minimum amount of time the input signal level must be present before the selected function is triggered.	5 to 200 ms	50 ms

10.5.8 Configuring the current output

The **Current output** wizard guides you systematically through all the parameters that have to be set for configuring the current output.

Navigation
"Setup" menu → Current output

▶ Current output 1	
Terminal number	→ 📄 103
Signal mode	→ 📄 103
Assign current output 1	→ 📄 103

Current span	→ 📄 103
0/4 mA value	→ 📄 104
20 mA value	→ 📄 104
Fixed current	→ 📄 104
Failure mode	→ 📄 104
Failure current	→ 📄 104

Parameter overview with brief description

Parameter	Prerequisite	Description	Selection / User interface / User entry	Factory setting
Assign current output	–	Select process variable for current output.	▪ Off ▪ Mass flow ▪ Volume flow ▪ Corrected volume flow ▪ Target mass flow * ▪ Carrier mass flow * ▪ Density ▪ Reference density ▪ Concentration * ▪ Temperature ▪ Carrier pipe temperature * ▪ Electronic temperature ▪ Oscillation frequency 0 ▪ Oscillation amplitude 0 * ▪ Frequency fluctuation 0 ▪ Oscillation damping 0 ▪ Oscillation damping fluctuation 0 ▪ Signal asymmetry ▪ Exciter current 0	Mass flow
Terminal number	–	Shows the terminal numbers used by the current output module.	▪ Not used ▪ 24-25 (I/O 2)	–
Current span	–	Select current range for process value output and upper/lower level for alarm signal.	▪ 4...20 mA NAMUR ▪ 4...20 mA US ▪ 4...20 mA ▪ 0...20 mA ▪ Fixed current	Country-specific: ▪ 4...20 mA NAMUR ▪ 4...20 mA US
Signal mode	–	Select the signal mode for the current output.	▪ Passive ▪ Active	Passive

Parameter	Prerequisite	Description	Selection / User interface / User entry	Factory setting
0/4 mA value	One of the following options is selected in the **Current span** parameter (→ 🗎 103): ▪ 4...20 mA NAMUR ▪ 4...20 mA US ▪ 4...20 mA ▪ 0...20 mA	Enter 4 mA value.	Signed floating-point number	Country-specific: ▪ 0 kg/h ▪ 0 lb/min
20 mA value	One of the following options is selected in the **Current span** parameter (→ 🗎 103): ▪ 4...20 mA NAMUR ▪ 4...20 mA US ▪ 4...20 mA ▪ 0...20 mA	Enter 20 mA value.	Signed floating-point number	Depends on country and nominal diameter
Fixed current	In the **Current span** parameter (→ 🗎 103), the **Fixed current** option is selected.	Defines the fixed output current.	0 to 22.5 mA	22.5 mA
Failure mode	One of the following options is selected in the **Assign current output** parameter (→ 🗎 103): ▪ Mass flow ▪ Volume flow ▪ Corrected volume flow ▪ Target mass flow * ▪ Carrier mass flow * ▪ Density ▪ Reference density ▪ Concentration * ▪ Temperature ▪ Carrier pipe temperature * ▪ Electronic temperature ▪ Oscillation frequency 0 ▪ Oscillation amplitude 0 * ▪ Frequency fluctuation 0 ▪ Oscillation damping 0 ▪ Oscillation damping fluctuation 0 ▪ Signal asymmetry ▪ Exciter current 0 One of the following options is selected in the **Current span** parameter (→ 🗎 103): ▪ 4...20 mA NAMUR ▪ 4...20 mA US ▪ 4...20 mA ▪ 0...20 mA	Define output behavior in alarm condition.	▪ Min. ▪ Max. ▪ Last valid value ▪ Actual value ▪ Defined value	Max.
Failure current	In the **Failure mode** parameter, the **Defined value** option is selected.	Enter current output value in alarm condition.	0 to 22.5 mA	22.5 mA

* Visibility depends on order options or device settings

10.5.9 Configuring the pulse/frequency/switch output

The **Pulse/frequency/switch output** wizard guides you systematically through all the parameters that can be set for configuring the selected output type.

Navigation
"Setup" menu → Advanced setup → Pulse/frequency/switch output

▶ **Pulse/frequency/switch output 1 to n**

Operating mode	→ 📄 105

Parameter overview with brief description

Parameter	Description	Selection	Factory setting
Operating mode	Define the output as a pulse, frequency or switch output.	▪ Pulse ▪ Frequency ▪ Switch	Pulse

Configuring the pulse output

Navigation
"Setup" menu → Pulse/frequency/switch output

▶ **Pulse/frequency/switch output 1 to n**

Operating mode	→ 📄 106
Terminal number	→ 📄 106
Signal mode	→ 📄 106
Assign pulse output	→ 📄 106
Value per pulse	→ 📄 106
Pulse width	→ 📄 106
Failure mode	→ 📄 106
Invert output signal	→ 📄 106

Parameter overview with brief description

Parameter	Prerequisite	Description	Selection / User interface / User entry	Factory setting
Operating mode	–	Define the output as a pulse, frequency or switch output.	▪ Pulse ▪ Frequency ▪ Switch	Pulse
Terminal number	–	Shows the terminal numbers used by the PFS output module.	▪ Not used ▪ 24-25 (I/O 2)	–
Signal mode	–	Select the signal mode for the PFS output.	▪ Passive ▪ Active	Passive
Assign pulse output 1 to n	In the **Operating mode** parameter, the **Pulse** option is selected.	Select process variable for pulse output.	▪ Off ▪ Mass flow ▪ Volume flow ▪ Corrected volume flow ▪ Target mass flow * ▪ Carrier mass flow *	Off
Value per pulse	In the **Operating mode** parameter, the **Pulse** option is selected and one of the following options is selected in the **Assign pulse output** parameter (→ 🗎 106): ▪ Mass flow ▪ Volume flow ▪ Corrected volume flow ▪ Target mass flow * ▪ Carrier mass flow *	Enter measured value at which a pulse is output.	Signed floating-point number	Depends on country and nominal diameter
Pulse width	In the **Operating mode** parameter, the **Pulse** option is selected and one of the following options is selected in the **Assign pulse output** parameter (→ 🗎 106): ▪ Mass flow ▪ Volume flow ▪ Corrected volume flow ▪ Target mass flow * ▪ Carrier mass flow *	Define time width of the output pulse.	0.05 to 2 000 ms	100 ms
Failure mode	In the **Operating mode** parameter, the **Pulse** option is selected and one of the following options is selected in the **Assign pulse output** parameter (→ 🗎 106): ▪ Mass flow ▪ Volume flow ▪ Corrected volume flow ▪ Target mass flow * ▪ Carrier mass flow *	Define output behavior in alarm condition.	▪ Actual value ▪ No pulses	No pulses
Invert output signal	–	Invert the output signal.	▪ No ▪ Yes	No

* Visibility depends on order options or device settings

Configuring the frequency output

Navigation
"Setup" menu → Pulse/frequency/switch output

▶ Pulse/frequency/switch output 1 to n	
Operating mode	→ 📄 107
Terminal number	→ 📄 107
Signal mode	→ 📄 107
Assign frequency output	→ 📄 108
Minimum frequency value	→ 📄 108
Maximum frequency value	→ 📄 109
Measuring value at minimum frequency	→ 📄 109
Measuring value at maximum frequency	→ 📄 110
Failure mode	→ 📄 110
Failure frequency	→ 📄 111
Invert output signal	→ 📄 111

Parameter overview with brief description

Parameter	Prerequisite	Description	Selection / User interface / User entry	Factory setting
Operating mode	–	Define the output as a pulse, frequency or switch output.	▪ Pulse ▪ Frequency ▪ Switch	Pulse
Terminal number	–	Shows the terminal numbers used by the PFS output module.	▪ Not used ▪ 24-25 (I/O 2)	–
Signal mode	–	Select the signal mode for the PFS output.	▪ Passive ▪ Active	Passive

Parameter	Prerequisite	Description	Selection / User interface / User entry	Factory setting
Assign frequency output	In the **Operating mode** parameter (→ 🗎 105), the **Frequency** option is selected.	Select process variable for frequency output.	▪ Off ▪ Mass flow ▪ Volume flow ▪ Corrected volume flow ▪ Target mass flow * ▪ Carrier mass flow * ▪ Density ▪ Reference density ▪ Concentration * ▪ Temperature ▪ Carrier pipe temperature * ▪ Electronic temperature ▪ Oscillation frequency 0 ▪ Oscillation amplitude 0 * ▪ Frequency fluctuation 0 ▪ Oscillation damping 0 ▪ Oscillation damping fluctuation 0 ▪ Signal asymmetry ▪ Exciter current 0 ▪ HBSI	Off
Minimum frequency value	In the **Operating mode** parameter the **Frequency** option is selected and in the **Assign frequency output** parameter (→ 🗎 108) one of the following options is selected: ▪ Mass flow ▪ Volume flow ▪ Corrected volume flow ▪ Target mass flow * ▪ Carrier mass flow * ▪ Density ▪ Reference density ▪ Concentration * ▪ Temperature ▪ Carrier pipe temperature * ▪ Electronic temperature ▪ Oscillation frequency 0 ▪ Frequency fluctuation 0 ▪ Oscillation amplitude 0 * ▪ Oscillation damping 0 ▪ Oscillation damping fluctuation 0 ▪ Signal asymmetry ▪ Exciter current 0	Enter minimum frequency.	0.0 to 10 000.0 Hz	0.0 Hz

Parameter	Prerequisite	Description	Selection / User interface / User entry	Factory setting
Maximum frequency value	In the **Operating mode** parameter the **Frequency** option is selected and in the **Assign frequency output** parameter (→ 🗎 108) one of the following options is selected: ▪ Mass flow ▪ Volume flow ▪ Corrected volume flow ▪ Target mass flow * ▪ Carrier mass flow * ▪ Density ▪ Reference density ▪ Concentration * ▪ Temperature ▪ Carrier pipe temperature * ▪ Electronic temperature ▪ Oscillation frequency 0 ▪ Frequency fluctuation 0 ▪ Oscillation amplitude 0 * ▪ Oscillation damping 0 ▪ Oscillation damping fluctuation 0 ▪ Signal asymmetry ▪ Exciter current 0	Enter maximum frequency.	0.0 to 10 000.0 Hz	10 000.0 Hz
Measuring value at minimum frequency	In the **Operating mode** parameter the **Frequency** option is selected and in the **Assign frequency output** parameter (→ 🗎 108) one of the following options is selected: ▪ Mass flow ▪ Volume flow ▪ Corrected volume flow ▪ Target mass flow * ▪ Carrier mass flow * ▪ Density ▪ Reference density ▪ Concentration * ▪ Temperature ▪ Carrier pipe temperature * ▪ Electronic temperature ▪ Oscillation frequency 0 ▪ Frequency fluctuation 0 ▪ Oscillation amplitude 0 * ▪ Oscillation damping 0 ▪ Oscillation damping fluctuation 0 ▪ Signal asymmetry ▪ Exciter current 0	Enter measured value for minmum frequency.	Signed floating-point number	Depends on country and nominal diameter

Parameter	Prerequisite	Description	Selection / User interface / User entry	Factory setting
Measuring value at maximum frequency	In the **Operating mode** parameter the **Frequency** option is selected and in the **Assign frequency output** parameter (→ 🗎 108) one of the following options is selected: ▪ Mass flow ▪ Volume flow ▪ Corrected volume flow ▪ Target mass flow * ▪ Carrier mass flow * ▪ Density ▪ Reference density ▪ Concentration * ▪ Temperature ▪ Carrier pipe temperature * ▪ Electronic temperature ▪ Oscillation frequency 0 ▪ Frequency fluctuation 0 ▪ Oscillation amplitude 0 * ▪ Oscillation damping 0 ▪ Oscillation damping fluctuation 0 ▪ Signal asymmetry ▪ Exciter current 0	Enter measured value for maximum frequency.	Signed floating-point number	Depends on country and nominal diameter
Failure mode	In the **Operating mode** parameter the **Frequency** option is selected and in the **Assign frequency output** parameter (→ 🗎 108) one of the following options is selected: ▪ Mass flow ▪ Volume flow ▪ Corrected volume flow ▪ Target mass flow * ▪ Carrier mass flow * ▪ Density ▪ Reference density ▪ Concentration * ▪ Temperature ▪ Carrier pipe temperature * ▪ Electronic temperature ▪ Oscillation frequency 0 ▪ Frequency fluctuation 0 ▪ Oscillation amplitude 0 * ▪ Oscillation damping 0 ▪ Oscillation damping fluctuation 0 ▪ Signal asymmetry ▪ Exciter current 0	Define output behavior in alarm condition.	▪ Actual value ▪ Defined value ▪ 0 Hz	0 Hz

Parameter	Prerequisite	Description	Selection / User interface / User entry	Factory setting
Failure frequency	In the **Operating mode** parameter the **Frequency** option is selected and in the **Assign frequency output** parameter (→ 🗎 108) one of the following options is selected: ▪ Mass flow ▪ Volume flow ▪ Corrected volume flow ▪ Target mass flow * ▪ Carrier mass flow * ▪ Density ▪ Reference density ▪ Concentration * ▪ Temperature ▪ Carrier pipe temperature * ▪ Electronic temperature ▪ Oscillation frequency 0 ▪ Frequency fluctuation 0 ▪ Oscillation amplitude 0 * ▪ Oscillation damping 0 ▪ Oscillation damping fluctuation 0 ▪ Signal asymmetry ▪ Exciter current 0	Enter frequency output value in alarm condition.	0.0 to 12 500.0 Hz	0.0 Hz
Invert output signal	–	Invert the output signal.	▪ No ▪ Yes	No

* Visibility depends on order options or device settings

Configuring the switch output

Navigation
"Setup" menu → Pulse/frequency/switch output

▶ **Pulse/frequency/switch output 1 to n**

Operating mode	→ 📄 112
Terminal number	→ 📄 112
Signal mode	→ 📄 112
Switch output function	→ 📄 113
Assign diagnostic behavior	→ 📄 113
Assign limit	→ 📄 113
Assign flow direction check	→ 📄 113
Assign status	→ 📄 113
Switch-on value	→ 📄 113
Switch-off value	→ 📄 113
Switch-on delay	→ 📄 113
Switch-off delay	→ 📄 114
Failure mode	→ 📄 114
Invert output signal	→ 📄 114

Parameter overview with brief description

Parameter	Prerequisite	Description	Selection / User interface / User entry	Factory setting
Operating mode	–	Define the output as a pulse, frequency or switch output.	▪ Pulse ▪ Frequency ▪ Switch	Pulse
Terminal number	–	Shows the terminal numbers used by the PFS output module.	▪ Not used ▪ 24-25 (I/O 2)	–
Signal mode	–	Select the signal mode for the PFS output.	▪ Passive ▪ Active	Passive

Parameter	Prerequisite	Description	Selection / User interface / User entry	Factory setting
Switch output function	In the **Operating mode** parameter the **Switch** option is selected.	Select function for switch output.	▪ Off ▪ On ▪ Diagnostic behavior ▪ Limit ▪ Flow direction check ▪ Status	Off
Assign diagnostic behavior	▪ In the **Operating mode** parameter, the **Switch** option is selected. ▪ In the **Switch output function** parameter, the **Diagnostic behavior** option is selected.	Select diagnostic behavior for switch output.	▪ Alarm ▪ Alarm or warning ▪ Warning	Alarm
Assign limit	▪ In the **Operating mode** parameter, the **Switch** option is selected. ▪ In the **Switch output function** parameter, the **Limit** option is selected.	Select process variable for limit function.	▪ Mass flow ▪ Volume flow ▪ Corrected volume flow ▪ Target mass flow * ▪ Carrier mass flow * ▪ Density ▪ Reference density ▪ Concentration * ▪ Temperature ▪ Totalizer 1 ▪ Totalizer 2 ▪ Totalizer 3 ▪ Oscillation damping	Mass flow
Assign flow direction check	▪ The **Switch** option is selected in the **Operating mode** parameter. ▪ The **Flow direction check** option is selected in the **Switch output function** parameter.	Select process variable for flow direction monitoring.	▪ Off ▪ Volume flow ▪ Mass flow ▪ Corrected volume flow	Mass flow
Assign status	▪ The **Switch** option is selected in the **Operating mode** parameter. ▪ The **Status** option is selected in the **Switch output function** parameter.	Select device status for switch output.	▪ Partially filled pipe detection ▪ Low flow cut off ▪ Digital output 6	Partially filled pipe detection
Switch-on value	▪ In the **Operating mode** parameter, the **Switch** option is selected. ▪ In the **Switch output function** parameter, the **Limit** option is selected.	Enter measured value for the switch-on point.	Signed floating-point number	Country-specific: ▪ 0 kg/h ▪ 0 lb/min
Switch-off value	▪ In the **Operating mode** parameter, the **Switch** option is selected. ▪ In the **Switch output function** parameter, the **Limit** option is selected.	Enter measured value for the switch-off point.	Signed floating-point number	Country-specific: ▪ 0 kg/h ▪ 0 lb/min
Switch-on delay	▪ The **Switch** option is selected in the **Operating mode** parameter. ▪ The **Limit** option is selected in the **Switch output function** parameter.	Define delay for the switch-on of status output.	0.0 to 100.0 s	0.0 s

Parameter	Prerequisite	Description	Selection / User interface / User entry	Factory setting
Switch-off delay	▪ The **Switch** option is selected in the **Operating mode** parameter. ▪ The **Limit** option is selected in the **Switch output function** parameter.	Define delay for the switch-off of status output.	0.0 to 100.0 s	0.0 s
Failure mode	–	Define output behavior in alarm condition.	▪ Actual status ▪ Open ▪ Closed	Open
Invert output signal	–	Invert the output signal.	▪ No ▪ Yes	No

* Visibility depends on order options or device settings

10.5.10 Configuring the relay output

The **Relay output** wizard guides the user systematically through all the parameters that have to be set for configuring the relay output.

Navigation

"Setup" menu → Relay output 1 to n

▶ RelaisOutput 1 to n	
Switch output function	→ 📄 115
Assign flow direction check	→ 📄 115
Assign limit	→ 📄 115
Assign diagnostic behavior	→ 📄 115
Assign status	→ 📄 115
Switch-off value	→ 📄 115
Switch-on value	→ 📄 115
Failure mode	→ 📄 115

Parameter overview with brief description

Parameter	Prerequisite	Description	Selection / User interface / User entry	Factory setting
Relay output function	–	Select the function for the relay output.	▪ Closed ▪ Open ▪ Diagnostic behavior ▪ Limit ▪ Flow direction check ▪ Digital Output	Closed
Terminal number	–	Shows the terminal numbers used by the relay output module.	▪ Not used ▪ 24-25 (I/O 2)	–
Assign flow direction check	In the **Relay output function** parameter, the **Flow direction check** option is selected.	Select process variable for flow direction monitoring.	▪ Off ▪ Volume flow ▪ Mass flow ▪ Corrected volume flow	Mass flow
Assign limit	In the **Relay output function** parameter, the **Limit** option is selected.	Select process variable for limit function.	▪ Mass flow ▪ Volume flow ▪ Corrected volume flow ▪ Target mass flow * ▪ Carrier mass flow * ▪ Density ▪ Reference density ▪ Concentration * ▪ Temperature ▪ Totalizer 1 ▪ Totalizer 2 ▪ Totalizer 3 ▪ Oscillation damping	Mass flow
Assign diagnostic behavior	In the **Relay output function** parameter, the **Diagnostic behavior** option is selected.	Select diagnostic behavior for switch output.	▪ Alarm ▪ Alarm or warning ▪ Warning	Alarm
Assign status	In the **Relay output function** parameter, the **Digital Output** option is selected.	Select device status for switch output.	▪ Partially filled pipe detection ▪ Low flow cut off ▪ Digital output 6	Partially filled pipe detection
Switch-off value	In the **Relay output function** parameter, the **Limit** option is selected.	Enter measured value for the switch-off point.	Signed floating-point number	Country-specific: ▪ 0 kg/h ▪ 0 lb/min
Switch-off delay	In the **Relay output function** parameter, the **Limit** option is selected.	Define delay for the switch-off of status output.	0.0 to 100.0 s	0.0 s
Switch-on value	In the **Relay output function** parameter, the **Limit** option is selected.	Enter measured value for the switch-on point.	Signed floating-point number	Country-specific: ▪ 0 kg/h ▪ 0 lb/min
Switch-on delay	In the **Relay output function** parameter, the **Limit** option is selected.	Define delay for the switch-on of status output.	0.0 to 100.0 s	0.0 s
Failure mode	–	Define output behavior in alarm condition.	▪ Actual status ▪ Open ▪ Closed	Open

* Visibility depends on order options or device settings

10.5.11 Configuring the local display

The **Display** wizard guides you systematically through all the parameters that can configured for configuring the local display.

Navigation
"Setup" menu → Display

▶ Display	
Format display	→ 📄 117
Value 1 display	→ 📄 117
0% bargraph value 1	→ 📄 117
100% bargraph value 1	→ 📄 117
Value 2 display	→ 📄 117
Value 3 display	→ 📄 117
0% bargraph value 3	→ 📄 117
100% bargraph value 3	→ 📄 118
Value 4 display	→ 📄 118

Parameter overview with brief description

Parameter	Prerequisite	Description	Selection / User entry	Factory setting
Format display	A local display is provided.	Select how measured values are shown on the display.	▪ 1 value, max. size ▪ 1 bargraph + 1 value ▪ 2 values ▪ 1 value large + 2 values ▪ 4 values	1 value, max. size
Value 1 display	A local display is provided.	Select the measured value that is shown on the local display.	▪ Mass flow ▪ Volume flow ▪ Corrected volume flow ▪ Target mass flow * ▪ Carrier mass flow * ▪ Density ▪ Reference density ▪ Concentration * ▪ Temperature ▪ Carrier pipe temperature * ▪ Electronic temperature ▪ Oscillation frequency 0 ▪ Oscillation amplitude 0 * ▪ Frequency fluctuation 0 ▪ Oscillation damping 0 ▪ Oscillation damping fluctuation 0 ▪ Signal asymmetry ▪ Exciter current 0 ▪ Totalizer 1 ▪ Totalizer 2 ▪ Totalizer 3 ▪ Current output 1	Mass flow
0% bargraph value 1	A local display is provided.	Enter 0% value for bar graph display.	Signed floating-point number	Country-specific: ▪ 0 kg/h ▪ 0 lb/min
100% bargraph value 1	A local display is provided.	Enter 100% value for bar graph display.	Signed floating-point number	Depends on country and nominal diameter
Value 2 display	A local display is provided.	Select the measured value that is shown on the local display.	For the picklist, see the **Value 1 display** parameter	None
Value 3 display	A local display is provided.	Select the measured value that is shown on the local display.	For the picklist, see the **Value 1 display** parameter (→ 🗎 117)	None
0% bargraph value 3	A selection was made in the **Value 3 display** parameter.	Enter 0% value for bar graph display.	Signed floating-point number	Country-specific: ▪ 0 kg/h ▪ 0 lb/min

Parameter	Prerequisite	Description	Selection / User entry	Factory setting
100% bargraph value 3	A selection was made in the **Value 3 display** parameter.	Enter 100% value for bar graph display.	Signed floating-point number	0
Value 4 display	A local display is provided.	Select the measured value that is shown on the local display.	For the picklist, see the **Value 1 display** parameter (→ 🗎 117)	None

* Visibility depends on order options or device settings

10.5.12 Configuring the low flow cut off

The **Low flow cut off** wizard systematically guides the user through all the parameters that must be set to configure low flow cut off.

Navigation
"Setup" menu → Low flow cut off

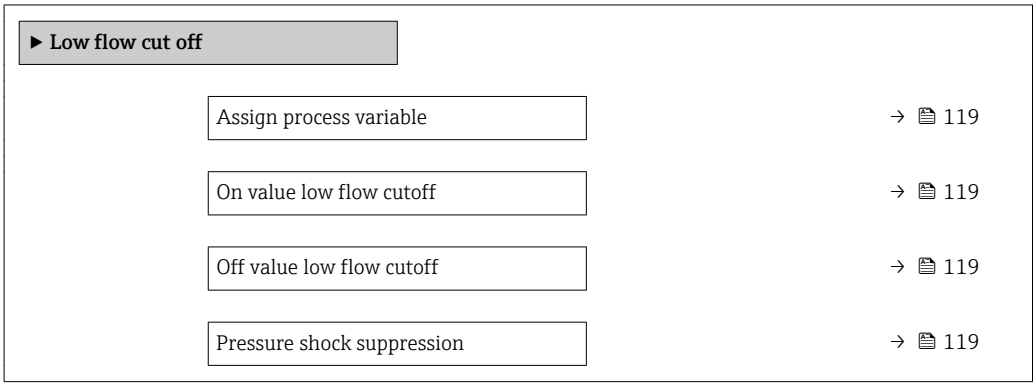

Parameter overview with brief description

Parameter	Prerequisite	Description	Selection / User entry	Factory setting
Assign process variable	–	Select process variable for low flow cut off.	▪ Off ▪ Mass flow ▪ Volume flow ▪ Corrected volume flow	Mass flow
On value low flow cutoff	One of the following options is selected in the **Assign process variable** parameter (→ 119): ▪ Mass flow ▪ Volume flow ▪ Corrected volume flow	Enter on value for low flow cut off.	Positive floating-point number	Depends on country and nominal diameter
Off value low flow cutoff	One of the following options is selected in the **Assign process variable** parameter (→ 119): ▪ Mass flow ▪ Volume flow ▪ Corrected volume flow	Enter off value for low flow cut off.	0 to 100.0 %	50 %
Pressure shock suppression	One of the following options is selected in the **Assign process variable** parameter (→ 119): ▪ Mass flow ▪ Volume flow ▪ Corrected volume flow	Enter time frame for signal suppression (= active pressure shock suppression).	0 to 100 s	0 s

10.5.13 Configuring the partial filled pipe detection

The **Partial filled pipe detection** wizard guides you systematically through all parameters that have to be set for configuring the monitoring of the pipe filling.

Navigation
"Setup" menu → Partially filled pipe detection

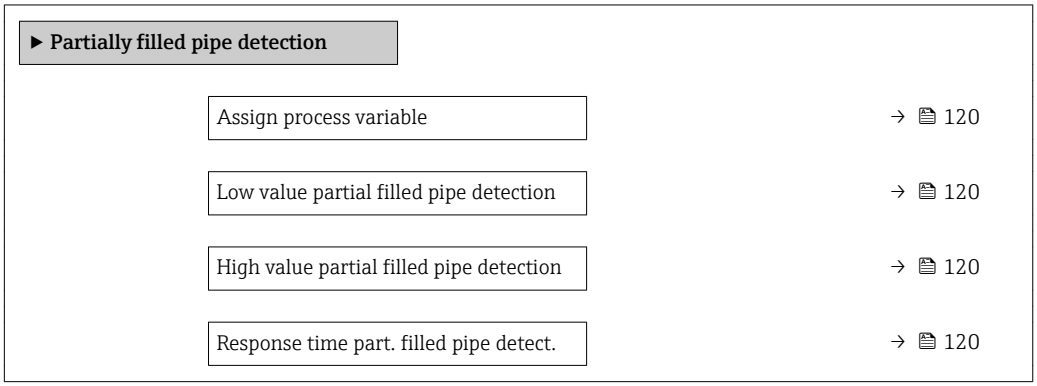

Parameter overview with brief description

Parameter	Prerequisite	Description	Selection / User entry	Factory setting
Assign process variable	–	Select process variable for partially filled pipe detection.	▪ Off ▪ Density ▪ Reference density	Off
Low value partial filled pipe detection	One of the following options is selected in the **Assign process variable** parameter (→ 120): ▪ Density ▪ Reference density	Enter lower limit value for deactivating partialy filled pipe detection.	Signed floating-point number	200
High value partial filled pipe detection	One of the following options is selected in the **Assign process variable** parameter (→ 120): ▪ Density ▪ Reference density	Enter upper limit value for deactivating partialy filled pipe detection.	Signed floating-point number	6 000
Response time part. filled pipe detect.	One of the following options is selected in the **Assign process variable** parameter (→ 120): ▪ Density ▪ Reference density	Enter time before diagnostic message is displayed for partially filled pipe detection.	0 to 100 s	1 s

10.6 Advanced settings

The **Advanced setup** submenu together with its submenus contains parameters for specific settings.

Navigation to the "Advanced setup" submenu

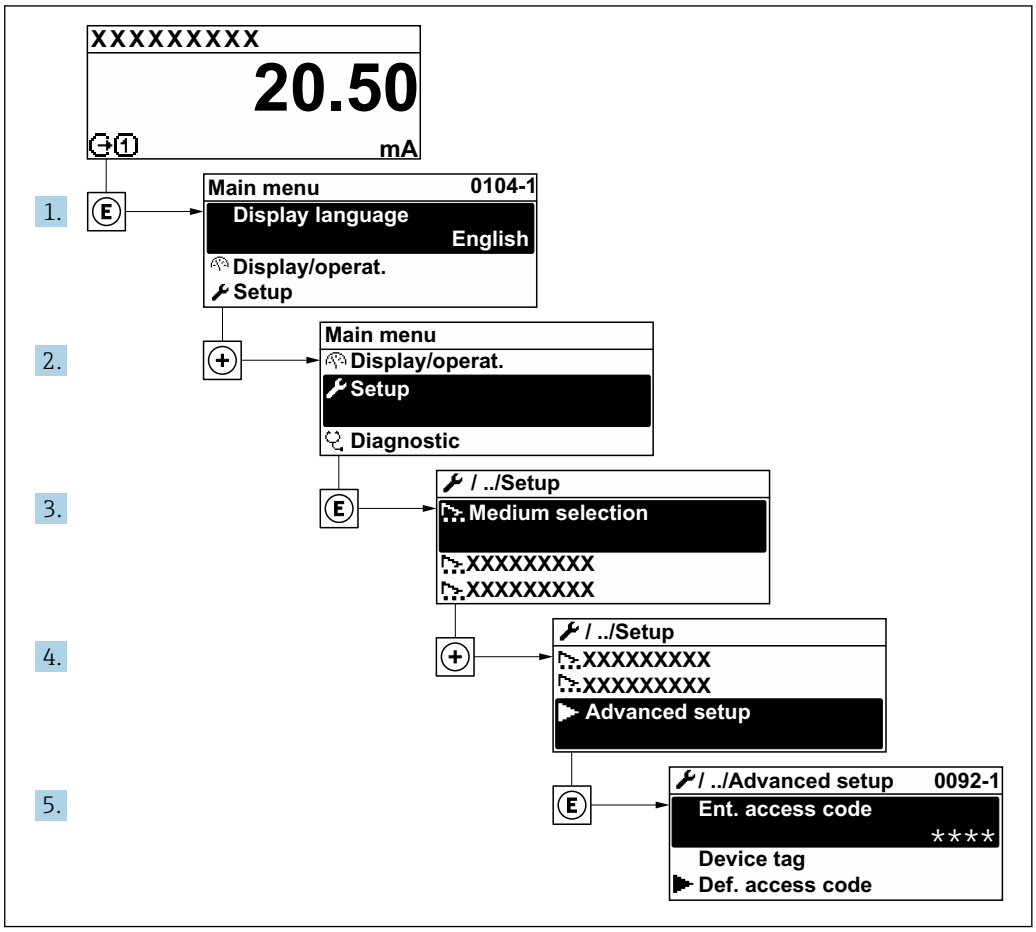

The number of submenus can vary depending on the device version. Some submenus are not dealt with in the Operating Instructions. These submenus and the parameters they contain are explained in the Special Documentation for the device.

Navigation
"Setup" menu → Advanced setup

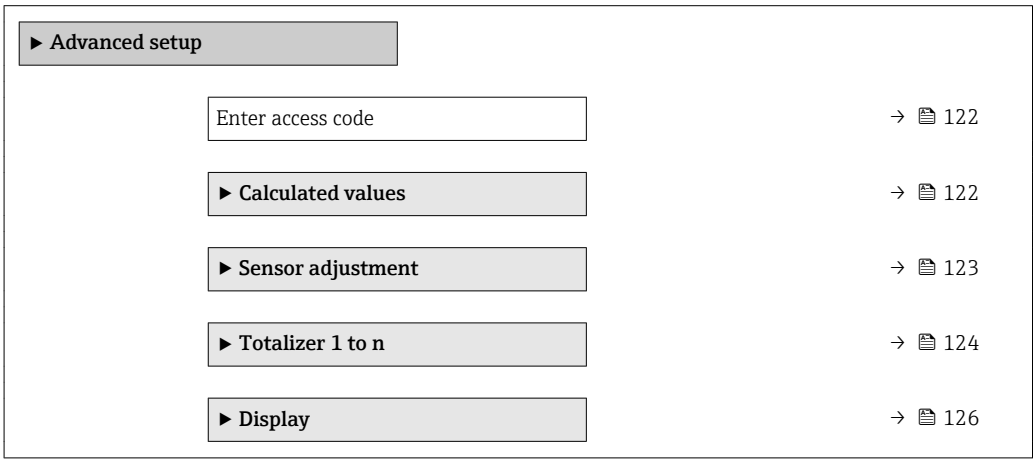

▶ WLAN settings	→ 📄 129
▶ Concentration	
▶ Heartbeat setup	
▶ Configuration backup	→ 📄 130
▶ Administration	→ 📄 131

10.6.1 Using the parameter to enter the access code

Navigation
"Setup" menu → Advanced setup

Parameter overview with brief description

Parameter	Description	User entry
Enter access code	Enter access code to disable write protection of parameters.	0 to 9 999

10.6.2 Calculated values

The **Calculated values** submenu contains parameters for calculating the corrected volume flow.

Navigation
"Setup" menu → Advanced setup → Calculated values

▶ Calculated values	
▶ Corrected volume flow calculation	
Corrected volume flow calculation	→ 📄 123
External reference density	→ 📄 123
Fixed reference density	→ 📄 123
Reference temperature	→ 📄 123
Linear expansion coefficient	→ 📄 123
Square expansion coefficient	→ 📄 123

Parameter overview with brief description

Parameter	Prerequisite	Description	Selection / User interface / User entry	Factory setting
Corrected volume flow calculation	–	Select reference density for calculating the corrected volume flow.	▪ Fixed reference density ▪ Calculated reference density ▪ Reference density by API table 53 ▪ External reference density ▪ Current input 1 *	Calculated reference density
External reference density	–	Shows external reference density.	Floating point number with sign	–
Fixed reference density	The **Fixed reference density** option is selected in the **Corrected volume flow calculation** parameter parameter.	Enter fixed value for reference density.	Positive floating-point number	1 kg/Nl
Reference temperature	The **Calculated reference density** option is selected in the **Corrected volume flow calculation** parameter.	Enter reference temperature for calculating the reference density.	−273.15 to 99 999 °C	Country-specific: ▪ +20 °C ▪ +68 °F
Linear expansion coefficient	The **Calculated reference density** option is selected in the **Corrected volume flow calculation** parameter parameter.	Enter linear, medium-specific expansion coefficient for calculating the reference density.	Signed floating-point number	0.0
Square expansion coefficient	The **Calculated reference density** option is selected in the **Corrected volume flow calculation** parameter parameter.	For media with a non-linear expansion pattern: enter the quadratic, medium-specific expansion coefficient for calculating the reference density.	Signed floating-point number	0.0

* Visibility depends on order options or device settings

10.6.3 Carrying out a sensor adjustment

The **Sensor adjustment** submenu contains parameters that pertain to the functionality of the sensor.

Navigation
"Setup" menu → Advanced setup → Sensor adjustment

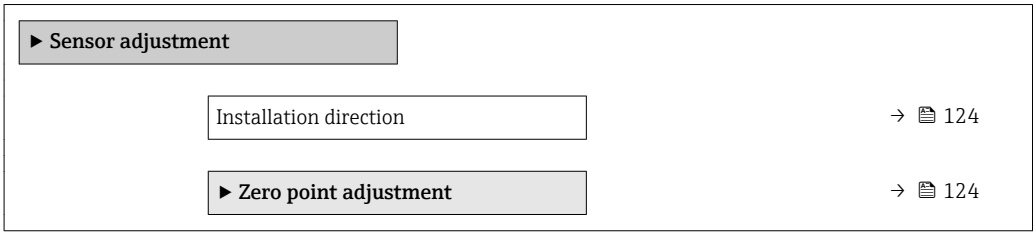

Parameter overview with brief description

Parameter	Description	Selection	Factory setting
Installation direction	Set sign of flow direction to match the direction of the arrow on the sensor.	▪ Flow in arrow direction ▪ Flow against arrow direction	Flow in arrow direction

Zero point adjustment

All measuring devices are calibrated in accordance with state-of-the-art technology. Calibration takes place under reference conditions→ 🗎 209. Therefore, a zero point adjustment in the field is generally not required.

Experience shows that zero point adjustment is advisable only in special cases:
- To achieve maximum measuring accuracy even with low flow rates.
- Under extreme process or operating conditions (e.g. very high process temperatures or very high-viscosity fluids).

Navigation
"Setup" menu → Advanced setup → Sensor adjustment → Zero point adjustment

▶ Zero point adjustment	
Zero point adjustment control	→ 🗎 124
Progress	→ 🗎 124

Parameter overview with brief description

Parameter	Description	Selection / User interface	Factory setting
Zero point adjustment control	Start zero point adjustment.	▪ Cancel ▪ Busy ▪ Zero point adjust failure ▪ Start	Cancel
Progress	Shows the progress of the process.	0 to 100 %	–

10.6.4 Configuring the totalizer

In the **"Totalizer 1 to n" submenu** the individual totalizer can be configured.

Navigation
"Setup" menu → Advanced setup → Totalizer 1 to n

▶ Totalizer 1 to n	
Assign process variable	→ 🗎 125
Unit totalizer 1 to n	→ 🗎 125
Totalizer operation mode	→ 🗎 125
Failure mode	→ 🗎 125

Parameter overview with brief description

Parameter	Prerequisite	Description	Selection	Factory setting
Assign process variable	–	Select process variable for totalizer.	▪ Off ▪ Volume flow ▪ Mass flow ▪ Corrected volume flow ▪ Target mass flow * ▪ Carrier mass flow *	Mass flow
Unit totalizer 1 to n	One of the following options is selected in the **Assign process variable** parameter (→ 🗎 125) of the **Totalizer 1 to n** submenu: ▪ Volume flow ▪ Mass flow ▪ Corrected volume flow ▪ Target mass flow * ▪ Carrier mass flow *	Select process variable totalizer unit.	Unit choose list	Country-specific: ▪ kg ▪ lb
Totalizer operation mode	One of the following options is selected in the **Assign process variable** parameter (→ 🗎 125)**Totalizer 1 to n** submenu: ▪ Volume flow ▪ Mass flow ▪ Corrected volume flow ▪ Target mass flow * ▪ Carrier mass flow *	Select totalizer calculation mode.	▪ Net flow total ▪ Forward flow total ▪ Reverse flow total	Net flow total
Failure mode	One of the following options is selected in the **Assign process variable** parameter (→ 🗎 125)**Totalizer 1 to n** submenu: ▪ Volume flow ▪ Mass flow ▪ Corrected volume flow ▪ Target mass flow * ▪ Carrier mass flow *	Define totalizer behavior in alarm condition.	▪ Stop ▪ Actual value ▪ Last valid value	Stop

* Visibility depends on order options or device settings

10.6.5 Carrying out additional display configurations

In the **Display** submenu you can set all the parameters associated with the configuration of the local display.

Navigation
"Setup" menu → Advanced setup → Display

▶ Display	
Format display	→ 127
Value 1 display	→ 127
0% bargraph value 1	→ 127
100% bargraph value 1	→ 127
Decimal places 1	→ 127
Value 2 display	→ 127
Decimal places 2	→ 127
Value 3 display	→ 127
0% bargraph value 3	→ 128
100% bargraph value 3	→ 128
Decimal places 3	→ 128
Value 4 display	→ 128
Decimal places 4	→ 128
Display language	→ 128
Display interval	→ 128
Display damping	→ 128
Header	→ 128
Header text	→ 128
Separator	→ 129
Backlight	→ 129

Parameter overview with brief description

Parameter	Prerequisite	Description	Selection / User entry	Factory setting
Format display	A local display is provided.	Select how measured values are shown on the display.	▪ 1 value, max. size ▪ 1 bargraph + 1 value ▪ 2 values ▪ 1 value large + 2 values ▪ 4 values	1 value, max. size
Value 1 display	A local display is provided.	Select the measured value that is shown on the local display.	▪ Mass flow ▪ Volume flow ▪ Corrected volume flow ▪ Target mass flow * ▪ Carrier mass flow * ▪ Density ▪ Reference density ▪ Concentration * ▪ Temperature ▪ Carrier pipe temperature * ▪ Electronic temperature ▪ Oscillation frequency 0 ▪ Oscillation amplitude 0 * ▪ Frequency fluctuation 0 ▪ Oscillation damping 0 ▪ Oscillation damping fluctuation 0 ▪ Signal asymmetry ▪ Exciter current 0 ▪ Totalizer 1 ▪ Totalizer 2 ▪ Totalizer 3 ▪ Current output 1	Mass flow
0% bargraph value 1	A local display is provided.	Enter 0% value for bar graph display.	Signed floating-point number	Country-specific: ▪ 0 kg/h ▪ 0 lb/min
100% bargraph value 1	A local display is provided.	Enter 100% value for bar graph display.	Signed floating-point number	Depends on country and nominal diameter
Decimal places 1	A measured value is specified in the **Value 1 display** parameter.	Select the number of decimal places for the display value.	▪ x ▪ x.x ▪ x.xx ▪ x.xxx ▪ x.xxxx	x.xx
Value 2 display	A local display is provided.	Select the measured value that is shown on the local display.	For the picklist, see the **Value 1 display** parameter	None
Decimal places 2	A measured value is specified in the **Value 2 display** parameter.	Select the number of decimal places for the display value.	▪ x ▪ x.x ▪ x.xx ▪ x.xxx ▪ x.xxxx	x.xx
Value 3 display	A local display is provided.	Select the measured value that is shown on the local display.	For the picklist, see the **Value 1 display** parameter (→ 🗎 117)	None

Parameter	Prerequisite	Description	Selection / User entry	Factory setting
0% bargraph value 3	A selection was made in the **Value 3 display** parameter.	Enter 0% value for bar graph display.	Signed floating-point number	Country-specific: ▪ 0 kg/h ▪ 0 lb/min
100% bargraph value 3	A selection was made in the **Value 3 display** parameter.	Enter 100% value for bar graph display.	Signed floating-point number	0
Decimal places 3	A measured value is specified in the **Value 3 display** parameter.	Select the number of decimal places for the display value.	▪ x ▪ x.x ▪ x.xx ▪ x.xxx ▪ x.xxxx	x.xx
Value 4 display	A local display is provided.	Select the measured value that is shown on the local display.	For the picklist, see the **Value 1 display** parameter (→ 🗎 117)	None
Decimal places 4	A measured value is specified in the **Value 4 display** parameter.	Select the number of decimal places for the display value.	▪ x ▪ x.x ▪ x.xx ▪ x.xxx ▪ x.xxxx	x.xx
Display language	A local display is provided.	Set display language.	▪ English ▪ Deutsch * ▪ Français * ▪ Español * ▪ Italiano * ▪ Nederlands * ▪ Portuguesa * ▪ Polski * ▪ русский язык (Russian) * ▪ Svenska * ▪ Türkçe * ▪ 中文 (Chinese) * ▪ 日本語 (Japanese) * ▪ 한국어 (Korean) * ▪ Bahasa Indonesia * ▪ tiếng Việt (Vietnamese) * ▪ čeština (Czech) *	English (alternatively, the ordered language is preset in the device)
Display interval	A local display is provided.	Set time measured values are shown on display if display alternates between values.	1 to 10 s	5 s
Display damping	A local display is provided.	Set display reaction time to fluctuations in the measured value.	0.0 to 999.9 s	0.0 s
Header	A local display is provided.	Select header contents on local display.	▪ Device tag ▪ Free text	Device tag
Header text	In the **Header** parameter, the **Free text** option is selected.	Enter display header text.	Max. 12 characters such as letters, numbers or special characters (e.g. @, %, /)	----------

Parameter	Prerequisite	Description	Selection / User entry	Factory setting
Separator	A local display is provided.	Select decimal separator for displaying numerical values.	▪ . (point) ▪ , (comma)	. (point)
Backlight	One of the following conditions is met: ▪ Order code for "Display; operation", option **F** "4-line, illum.; touch control" ▪ Order code for "Display; operation", option **G** "4-line, illum.; touch control +WLAN"	Switch the local display backlight on and off.	▪ Disable ▪ Enable	Enable

* Visibility depends on order options or device settings

10.6.6 WLAN configuration

The **WLAN Settings** submenu guides the user systematically through all the parameters that have to be set for the WLAN configuration.

Navigation

"Setup" menu → Advanced setup → WLAN Settings

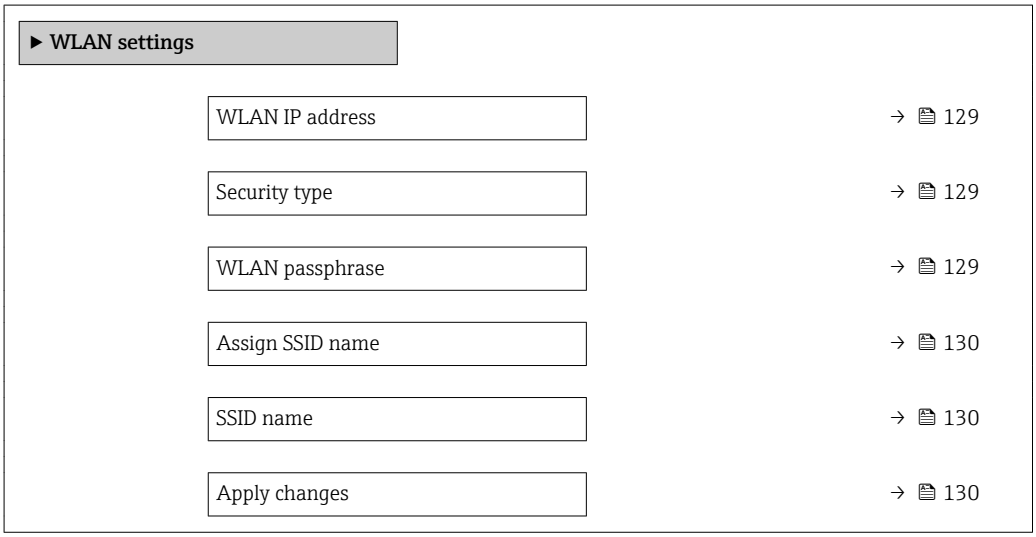

Parameter overview with brief description

Parameter	Prerequisite	Description	User entry / Selection	Factory setting
WLAN IP address	–	Enter IP address of the device WLAN interface.	4 octet: 0 to 255 (in the particular octet)	192.168.1.212
Security type	–	Select the security type of the WLAN interface.	▪ Unsecured ▪ WPA2-PSK	WPA2-PSK
WLAN passphrase	In the **Security type** parameter, the **WPA2-PSK** option is selected.	Enter the network key (8 to 32 characters). ℹ The network key supplied with the device should be changed during commissioning for security reasons.	8 to 32-digit character string comprising numbers, letters and special characters	Serial number of the measuring device (e.g. L100A802000)

Parameter	Prerequisite	Description	User entry / Selection	Factory setting
Assign SSID name	–	Select which name will be used for SSID: device tag or user-defined name.	▪ Device tag ▪ User-defined	User-defined
SSID name	In the **Assign SSID name** parameter, the **User-defined** option is selected.	Enter the user-defined SSID name (max. 32 characters). The user-defined SSID name may only be assigned once. If the SSID name is assigned more than once, the devices can interfere with one another.	Max. 32-digit character string comprising numbers, letters and special characters	EH_device designation_last 7 digits of the serial number (e.g. EH_Promass_500_A 802000)
Apply changes	–	Use changed WLAN settings.	▪ Cancel ▪ Ok	Cancel

10.6.7 Configuration management

After commissioning, you can save the current device configurationor restore the previous device configuration.

You can do so using the **Configuration management** parameter and the related options found in the **Configuration backup** submenu.

Navigation

"Setup" menu → Advanced setup → Configuration backup

▶ Configuration backup	
Operating time	→ 📄 130
Last backup	→ 📄 130
Configuration management	→ 📄 130
Backup state	→ 📄 131
Comparison result	→ 📄 131

Parameter overview with brief description

Parameter	Description	User interface / Selection	Factory setting
Operating time	Indicates how long the device has been in operation.	Days (d), hours (h), minutes (m) and seconds (s)	–
Last backup	Shows when the last data backup was saved to embedded HistoROM.	Days (d), hours (h), minutes (m) and seconds (s)	–
Configuration management	Select action for managing the device data in the embedded HistoROM.	▪ Cancel ▪ Execute backup ▪ Restore ▪ Compare ▪ Clear backup data	Cancel

Parameter	Description	User interface / Selection	Factory setting
Backup state	Shows the current status of data saving or restoring.	▪ None ▪ Backup in progress ▪ Restoring in progress ▪ Delete in progress ▪ Compare in progress ▪ Restoring failed ▪ Backup failed	None
Comparison result	Comparison of current device data with embedded HistoROM.	▪ Settings identical ▪ Settings not identical ▪ No backup available ▪ Backup settings corrupt ▪ Check not done ▪ Dataset incompatible	Check not done

Function scope of the "Configuration management" parameter

Options	Description
Cancel	No action is executed and the user exits the parameter.
Execute backup	A backup copy of the current device configuration is saved from the integrated HistoROM to the memory of the device. The backup copy includes the transmitter data of the device.
Restore	The last backup copy of the device configuration is restored from the device memory to the device's integrated HistoROM. The backup copy includes the transmitter data of the device.
Compare	The device configuration saved in the device memory is compared with the current device configuration of the integrated HistoROM.
Clear backup data	The backup copy of the device configuration is deleted from the memory of the device.

Integrated HistoROM
A HistoROM is a "non-volatile" device memory in the form of an EEPROM.

While this action is in progress, the configuration cannot be edited via the local display and a message on the processing status appears on the display.

10.6.8 Using parameters for device administration

The **Administration** submenu systematically guides the user through all the parameters that can be used for device administration purposes.

Navigation

"Setup" menu → Advanced setup → Administration

▶ **Administration**	
▶ **Define access code**	→ 132
▶ **Reset access code**	→ 132
Device reset	→ 133

Using the parameter to define the access code

Navigation
"Setup" menu → Advanced setup → Administration → Define access code

▶ Define access code		
	Define access code	→ 📄 132
	Confirm access code	→ 📄 132

Parameter overview with brief description

Parameter	Description	User entry
Define access code	Restrict write-access to parameters to protect the configuration of the device against unintentional changes.	Max. 16-digit character string comprising numbers, letters and special characters
Confirm access code	Confirm the entered access code.	Max. 16-digit character string comprising numbers, letters and special characters

Using the parameter to reset the access code

Navigation
"Setup" menu → Advanced setup → Administration → Reset access code

▶ Reset access code		
	Operating time	→ 📄 132
	Reset access code	→ 📄 132

Parameter overview with brief description

Parameter	Description	User interface / User entry	Factory setting
Operating time	Indicates how long the device has been in operation.	Days (d), hours (h), minutes (m) and seconds (s)	–
Reset access code	Reset access code to factory settings. ℹ For a reset code, contact your Endress+Hauser service organization. The reset code can only be entered via: ▪ Web browser ▪ DeviceCare, FieldCare (via service interface CDI-RJ45) ▪ Fieldbus	Character string comprising numbers, letters and special characters	0x00

Using the parameter to reset the device

Navigation
"Setup" menu → Advanced setup → Administration

Parameter overview with brief description

Parameter	Description	Selection	Factory setting
Device reset	Reset the device configuration - either entirely or in part - to a defined state.	▪ Cancel ▪ To delivery settings ▪ Restart device ▪ Restore S-DAT backup ▪ ENP restart	Cancel

10.7 Simulation

The **Simulation** submenu enables you to simulate, without a real flow situation, various process variables in the process and the device alarm mode and to verify downstream signal chains (switching valves or closed-control loops).

Navigation
"Diagnostics" menu → Simulation

▶ Simulation	
Assign simulation process variable	→ 134
Process variable value	→ 134
Status input simulation	→ 134
Input signal level	→ 134
Current input 1 to n simulation	→ 134
Value current input 1 to n	→ 134
Current output 1 to n simulation	→ 134
Value current output 1 to n	→ 134
Frequency output simulation 1 to n	→ 134
Frequency value 1 to n	→ 134
Pulse output simulation 1 to n	→ 135
Pulse value 1 to n	→ 135
Switch output simulation 1 to n	→ 135
Switch status 1 to n	→ 135
Relay output 1 to n simulation	→ 135
Switch status 1 to n	→ 135

Device alarm simulation	→ 🗎 135
Diagnostic event category	→ 🗎 135
Diagnostic event simulation	→ 🗎 135

Parameter overview with brief description

Parameter	Prerequisite	Description	Selection / User entry / User interface	Factory setting
Assign simulation process variable	–	Select a process variable for the simulation process that is activated.	▪ Off ▪ Mass flow ▪ Volume flow ▪ Corrected volume flow ▪ Density ▪ Reference density ▪ Temperature ▪ Concentration * ▪ Target mass flow * ▪ Carrier mass flow *	Off
Process variable value	One of the following options is selected in the **Assign simulation process variable** parameter (→ 🗎 134): ▪ Mass flow ▪ Volume flow ▪ Corrected volume flow ▪ Density ▪ Reference density ▪ Temperature ▪ Concentration * ▪ Target mass flow * ▪ Carrier mass flow *	Enter the simulation value for the selected process variable.	Depends on the process variable selected	0
Status input simulation	–	Switch simulation of the status input on and off.	▪ Off ▪ On	Off
Input signal level	In the **Status input simulation** parameter, the **On** option is selected.	Select the signal level for the simulation of the status input.	▪ High ▪ Low	High
Current input simulation	–	Switch simulation of the current input on and off.	▪ Off ▪ On	Off
Value current input	In the **Current input 1 to n simulation** parameter, the **On** option is selected.	Enter the current value for simulation.	0 to 22.5 mA	0 mA
Current output simulation	–	Switch the simulation of the current output on and off.	▪ Off ▪ On	Off
Value current output	In the **Current output 1 to n simulation** parameter, the **On** option is selected.	Enter the current value for simulation.	3.59 to 22.5 mA	3.59 mA
Frequency output simulation	In the **Operating mode** parameter, the **Frequency** option is selected.	Switch the simulation of the frequency output on and off.	▪ Off ▪ On	Off
Frequency value	In the **Frequency output simulation 1 to n** parameter, the **On** option is selected.	Enter the frequency value for the simulation.	0.0 to 12 500.0 Hz	0.0 Hz

Parameter	Prerequisite	Description	Selection / User entry / User interface	Factory setting
Pulse output simulation	In the **Operating mode** parameter, the **Pulse** option is selected.	Set and switch off the pulse output simulation. For **Fixed value** option: **Pulse width** parameter (→ 106) defines the pulse width of the pulses output.	▪ Off ▪ Fixed value ▪ Down-counting value	Off
Pulse value	In the **Pulse output simulation 1 to n** parameter, the **Down-counting value** option is selected.	Enter the number of pulses for simulation.	0 to 65 535	0
Switch output simulation	In the **Operating mode** parameter, the **Switch** option is selected.	Switch the simulation of the switch output on and off.	▪ Off ▪ On	Off
Switch status	–	Select the status of the status output for the simulation.	▪ Open ▪ Closed	Open
Relay output simulation	–	Switch simulation of the relay output on and off.	▪ Off ▪ On	Off
Switch status	The **On** option is selected in the **Switch output simulation 1 to n** parameter parameter.	Select status of the relay output for the simulation.	▪ Open ▪ Closed	Open
Pulse output simulation	–	Set and switch off the pulse output simulation. For **Fixed value** option: **Pulse width** parameter defines the pulse width of the pulses output.	▪ Off ▪ Fixed value ▪ Down-counting value	Off
Pulse value	In the **Pulse output simulation** parameter, the **Down-counting value** option is selected.	Set and switch off the pulse output simulation.	0 to 65 535	0
Device alarm simulation	–	Switch the device alarm on and off.	▪ Off ▪ On	Off
Diagnostic event category	–	Select a diagnostic event category.	▪ Sensor ▪ Electronics ▪ Configuration ▪ Process	Process
Diagnostic event simulation	–	Select a diagnostic event to simulate this event.	▪ Off ▪ Diagnostic event picklist (depends on the category selected)	Off
Logging interval	–	Define the logging interval tlog for data logging. This value defines the time interval between the individual data points in the memory.	1.0 to 3 600.0 s	–

* Visibility depends on order options or device settings

10.8 Protecting settings from unauthorized access

The following write protection options exist in order to protect the configuration of the measuring device from unintentional modification:
- Protect access to parameters via access code → 136
- Protect access to local operation via key locking → 72
- Protect access to measuring device via write protection switch → 137
- Protect access to parameters via block operation → 139

10.8.1 Write protection via access code

The effects of the user-specific access code are as follows:
- Via local operation, the parameters for the measuring device configuration are write-protected and their values can no longer be changed.
- Device access is protected via the Web browser, as are the parameters for the measuring device configuration.
- Device access is protected via FieldCare or DeviceCare (via CDI-RJ45 service interface), as are the parameters for the measuring device configuration.

Defining the access code via local display

1. Navigate to the **Define access code** parameter (→ 132).
2. Define a max. 16-digit character string comprising numbers, letters and special characters as the access code.
3. Enter the access code again in the **Confirm access code** parameter (→ 132) to confirm the code.
   ↳ The 🔒-symbol appears in front of all write-protected parameters.

The device automatically locks the write-protected parameters again if a key is not pressed for 10 minutes in the navigation and editing view. The device locks the write-protected parameters automatically after 60 s if the user skips back to the operational display mode from the navigation and editing view.

- If parameter write protection is activated via an access code, it can also only be deactivated via this access code → 72.
- The user role with which the user is currently logged on via the local display is indicated by the → 72 **Access status** parameter. Navigation path: Operation → Access status

Parameters which can always be modified via the local display

Certain parameters that do not affect the measurement are excepted from parameter write protection via the local display. Despite the user-specific access code, they can always be modified, even if the other parameters are locked.

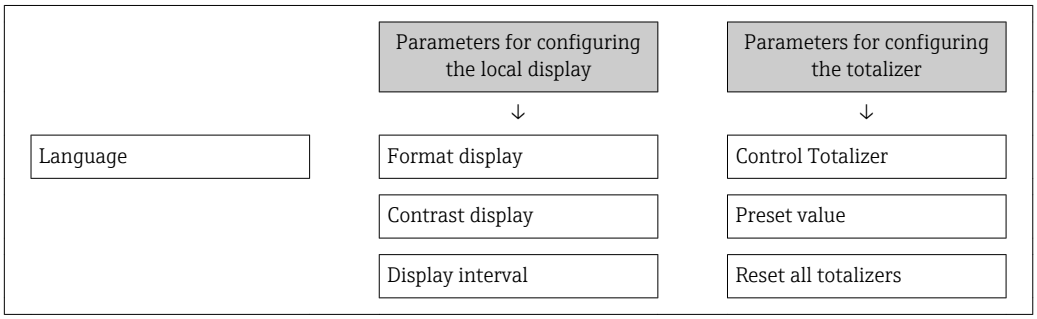

Defining the access code via the Web browser

1. Navigate to the **Define access code** parameter (→ 132).

2. Max. Define a max. 4-digit numeric code as an access code.
3. Enter the access code again in the **Confirm access code** parameter (→ 132) to confirm the code.
   ↳ The Web browser switches to the login page.

If no action is performed for 10 minutes, the Web browser automatically returns to the login page.

- If parameter write protection is activated via an access code, it can also only be deactivated via this access code → 72.
- The user role with which the user is currently logged on via Web browser is indicated by the **Access status** parameter. Navigation path: Operation → Access status

Resetting the access code

If you misplace the user-specific access code, it is possible to reset the code to the factory setting. A reset code must be entered for this purpose. The user-specific access code can then be defined again afterwards.

Via Web browser, FieldCare, DeviceCare (via CDI-RJ45 service interface), fieldbus

For a reset code, contact your Endress+Hauser service organization.

1. Navigate to the **Reset access code** parameter (→ 132).
2. Enter the reset code.
   ↳ The access code has been reset to the factory setting **0000**. It can be redefined → 136.

10.8.2 Write protection via write protection switch

Unlike parameter write protection via a user-specific access code, this allows write access to the entire operating menu - except for the **"Contrast display" parameter** - to be locked.

The parameter values are now read only and cannot be edited any more (exception **"Contrast display" parameter**):
- Via local display
- Via FOUNDATION Fieldbus

Proline 500 – digital

WARNING

Excessive tightening torque applied to the fixing screws!
Risk of damaging the plastic transmitter.
▶ Tighten the fixing screws as per the tightening torque: 2 Nm (1.5 lbf ft)

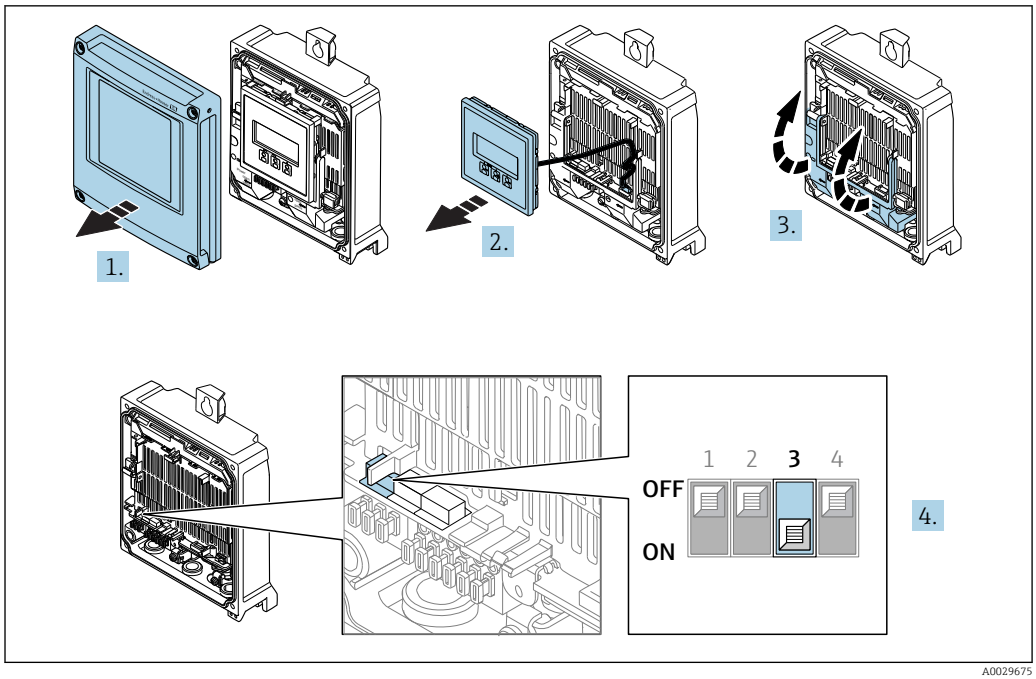

A0029675

1. Open the housing cover.
2. Remove the display module.
3. Fold open the terminal cover.
4. Setting the write protection (WP) switch on the main electronics module to the **ON** position enables hardware write protection.
   ↳ In the **Locking status** parameter the **Hardware locked** option is displayed → 📄 140. In addition, on the local display the 🔒-symbol appears in front of the parameters in the header of the operational display and in the navigation view.

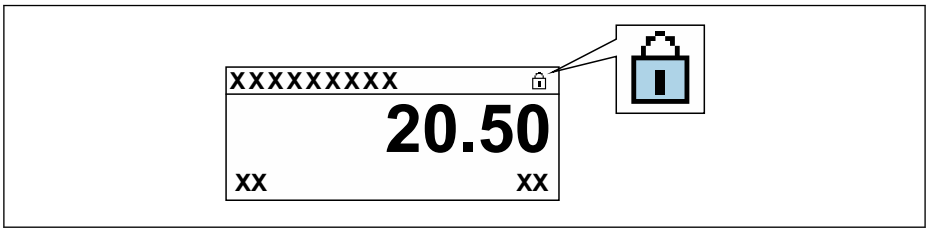

A0029425

5. Setting the write protection (WP) switch on the main electronics module to the **OFF** position (factory setting) disables hardware write protection.
   ↳ No option is displayed in the **Locking status** parameter → 📄 140. On the local display, the 🔒-symbol disappears from in front of the parameters in the header of the operational display and in the navigation view.

Proline 500

1. 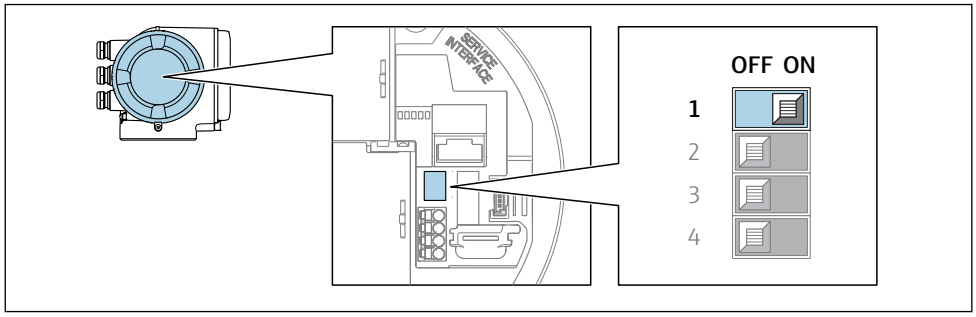

A0029630

Setting the write protection (WP) switch on the main electronics module to the **ON** position enables hardware write protection.

↳ In the **Locking status** parameter the **Hardware locked** option is displayed → 📄 140. In addition, on the local display the 🔒-symbol appears in front of the parameters in the header of the operational display and in the navigation view.

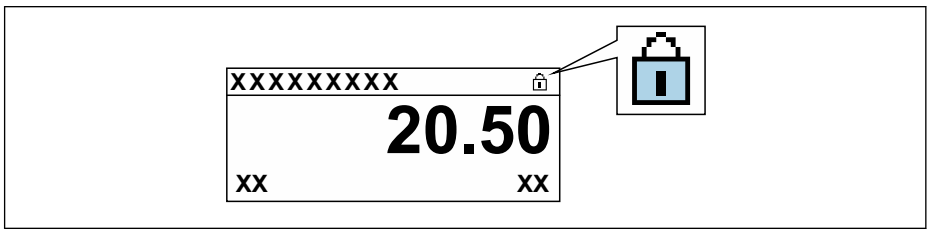

A0029425

2. Setting the write protection (WP) switch on the main electronics module to the **OFF** position (factory setting) disables hardware write protection.

↳ No option is displayed in the **Locking status** parameter → 📄 140. On the local display, the 🔒-symbol disappears from in front of the parameters in the header of the operational display and in the navigation view.

10.8.3 Write protection via block operation

Locking via block operation:
- Block: **DISPLAY (TRDDISP)**; parameter: **Define access code**
- Block: **EXPERT_CONFIG (TRDEXP)**; parameter: **Enter access code**

11 Operation

11.1 Reading the device locking status

Device active write protection: **Locking status** parameter

Operation → Locking status

Function scope of the "Locking status" parameter

Options	Description
None	The access status displayed in the **Access status** parameter applies → 🗎 72. Only appears on local display.
Hardware locked	The DIP switch for hardware locking is activated on the PCB board. This locks write access to the parameters (e.g. via local display or operating tool).
Temporarily locked	Write access to the parameters is temporarily locked on account of internal processes running in the device (e.g. data upload/download, reset etc.). Once the internal processing has been completed, the parameters can be changed once again.

11.2 Adjusting the operating language

Detailed information:
- To configure the operating language → 🗎 92
- For information on the operating languages supported by the measuring device → 🗎 220

11.3 Configuring the display

Detailed information:
- On the basic settings for the local display → 🗎 116
- On the advanced settings for the local display → 🗎 126

11.4 Reading measured values

With the **Measured values** submenu, it is possible to read all the measured values.

Navigation
"Diagnostics" menu → Measured values

▶ **Measured values**	
▶ **Measured variables**	→ 🗎 141
▶ **Input values**	→ 🗎 143
▶ **Output values**	→ 🗎 144
▶ **Totalizer**	→ 🗎 142

11.4.1 "Measured variables" submenu

The **Measured variables** submenu contains all the parameters needed to display the current measured values for each process variable.

Navigation
"Diagnostics" menu → Measured values → Measured variables

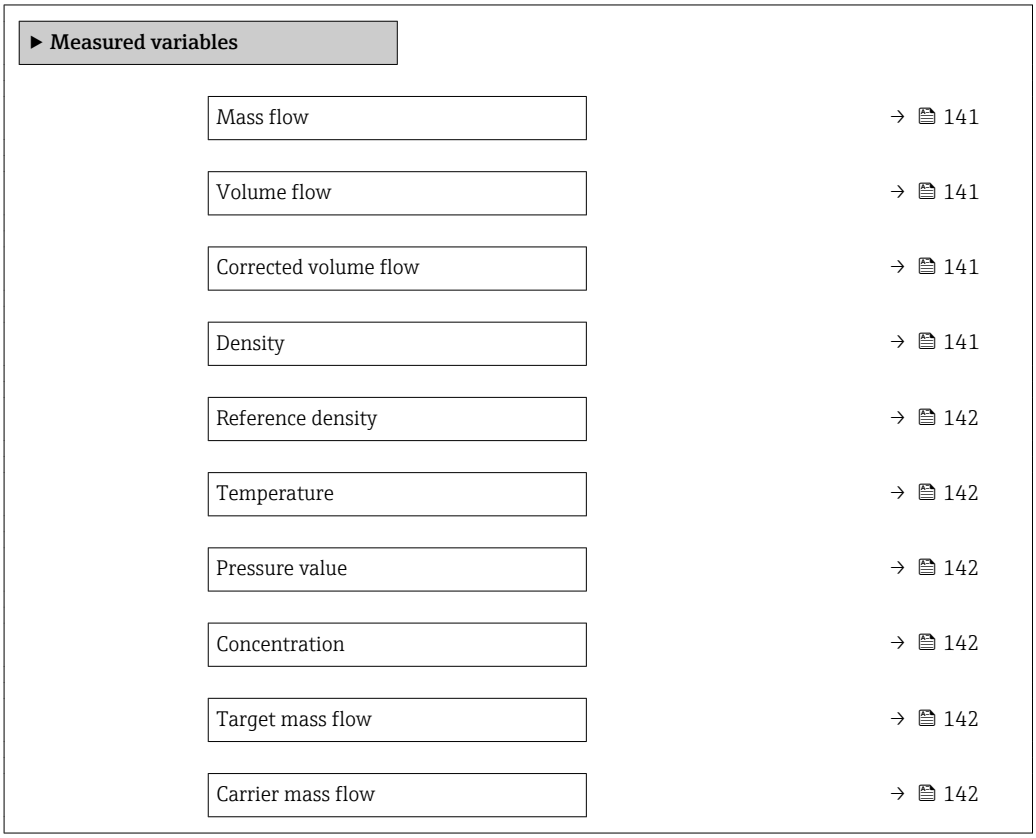

Parameter overview with brief description

Parameter	Prerequisite	Description	User interface
Mass flow	–	Displays the mass flow currently measured. *Dependency* The unit is taken from the **Mass flow unit** parameter (→ 95).	Signed floating-point number
Volume flow	–	Displays the volume flow currently calculated. *Dependency* The unit is taken from the **Volume flow unit** parameter (→ 95).	Signed floating-point number
Corrected volume flow	–	Displays the corrected volume flow currently calculated. *Dependency* The unit is taken from the **Corrected volume flow unit** parameter (→ 95).	Signed floating-point number
Density	–	Shows the density currently measured. *Dependency* The unit is taken from the **Density unit** parameter (→ 95).	Signed floating-point number

Parameter	Prerequisite	Description	User interface
Reference density	–	Displays the reference density currently calculated. *Dependency* The unit is taken from the **Reference density unit** parameter (→ 🗎 95).	Signed floating-point number
Temperature	–	Shows the medium temperature currently measured. *Dependency* The unit is taken from the **Temperature unit** parameter (→ 🗎 96).	Signed floating-point number
Pressure value	–	Displays either a fixed or external pressure value. *Dependency* The unit is taken from the **Pressure unit** parameter (→ 🗎 96).	Signed floating-point number
Concentration	For the following order code: "Application package", option **ED** "Concentration" ℹ The software options currently enabled are displayed in the **Software option overview** parameter.	Displays the concentration currently calculated. *Dependency* The unit is taken from the **Concentration unit** parameter.	Signed floating-point number
Target mass flow	With the following conditions: ▪ Order code for "Application package", option **ED** "Concentration" ▪ The **WT-%** option or the **User conc.** option is selected in the **Concentration unit** parameter. ℹ The software options currently enabled are displayed in the **Software option overview** parameter.	Displays the target fluid mass flow currently measured. *Dependency* The unit is taken from the **Mass flow unit** parameter (→ 🗎 95).	Signed floating-point number
Carrier mass flow	With the following conditions: ▪ Order code for "Application package", option **ED** "Concentration" ▪ The **WT-%** option or the **User conc.** option is selected in the **Concentration unit** parameter. ℹ The software options currently enabled are displayed in the **Software option overview** parameter.	Displays the carrier fluid mass flow currently measured. *Dependency* The unit is taken from the **Mass flow unit** parameter (→ 🗎 95).	Signed floating-point number

11.4.2 "Totalizer" submenu

The **Totalizer** submenu contains all the parameters needed to display the current measured values for every totalizer.

Navigation

"Diagnostics" menu → Measured values → Totalizer

▶ **Totalizer**	
Totalizer value 1 to n	→ 🗎 143
Totalizer overflow 1 to n	→ 🗎 143

Parameter overview with brief description

Parameter	Prerequisite	Description	User interface
Totalizer value 1 to n	A process variable is selected in the **Assign process variable** parameter (→ 🗎 125) of the **Totalizer 1 to n** submenu.	Displays the current totalizer counter value.	Signed floating-point number
Totalizer overflow 1 to n	A process variable is selected in the **Assign process variable** parameter (→ 🗎 125) of the **Totalizer 1 to n** submenu.	Displays the current totalizer overflow.	Integer with sign

11.4.3 "Input values" submenu

The **Input values** submenu guides you systematically to the individual input values.

Navigation

"Diagnostics" menu → Measured values → Input values

▶ **Input values**	
▶ **Current input 1 to n**	→ 🗎 143
▶ **Status input 1 to n**	→ 🗎 143

Input values of current input

The **Current input 1 to n** submenu contains all the parameters needed to display the current measured values for every current input.

Navigation

"Diagnostics" menu → Measured values → Input values → Current input 1 to n

▶ **Current input 1 to n**	
Measured values 1 to n	→ 🗎 143
Measured current 1 to n	→ 🗎 143

Parameter overview with brief description

Parameter	Description	User interface
Measured values	Displays the current input value.	Signed floating-point number
Measured current	Displays the current value of the current input.	0 to 22.5 mA

Input values of status input

The **Status input 1 to n** submenu contains all the parameters needed to display the current measured values for every status input.

Navigation
"Diagnostics" menu → Measured values → Input values → Status input 1 to n

▶ **Status input 1 to n**		
	Value status input	→ 📄 144

Parameter overview with brief description

Parameter	Description	User interface
Value status input	Shows the current input signal level.	▪ High ▪ Low

11.4.4 Output values

The **Output values** submenu contains all the parameters needed to display the current measured values for every output.

Navigation
"Diagnostics" menu → Measured values → Output values

▶ **Output values**		
	▶ **Current output 1 to n**	→ 📄 144
	▶ **Pulse/frequency/switch output 1 to n**	→ 📄 145
	▶ **Relay output 1 to n**	→ 📄 145

Output values of current output

The **Value current output** submenu contains all the parameters needed to display the current measured values for every current output.

Navigation
"Diagnostics" menu → Measured values → Output values → Value current output 1 to n

▶ **Current output 1 to n**		
	Output current 1 to n	→ 📄 145
	Measured current 1 to n	→ 📄 145

Parameter overview with brief description

Parameter	Description	User interface
Output current 1	Displays the current value currently calculated for the current output.	3.59 to 22.5 mA
Measured current	Displays the current value currently measured for the current output.	0 to 30 mA

Output values for pulse/frequency/switch output

The **Pulse/frequency/switch output 1 to n** submenu contains all the parameters needed to display the current measured values for every pulse/frequency/switch output.

Navigation
"Diagnostics" menu → Measured values → Output values → Pulse/frequency/switch output 1 to n

▶ **Pulse/frequency/switch output 1 to n**	
Output frequency 1 to n	→ 📄 145
Pulse output 1 to n	→ 📄 145
Switch status 1 to n	→ 📄 145

Parameter overview with brief description

Parameter	Prerequisite	Description	User interface
Output frequency	In the **Operating mode** parameter, the **Frequency** option is selected.	Displays the value currently measured for the frequency output.	0.0 to 12 500.0 Hz
Pulse output	In the **Operating mode** parameter, the **Pulse** option is selected.	Displays the pulse frequency currently output.	Positive floating-point number
Switch status	The **Switch** option is selected in the **Operating mode** parameter.	Displays the current switch output status.	▪ Open ▪ Closed

Output values for relay output

The **Relay output 1 to n** submenu contains all the parameters needed to display the current measured values for every relay output.

Navigation
"Diagnostics" menu → Measured values → Output values → Relay output 1 to n

▶ **Relay output 1 to n**	
Switch status	→ 📄 146
Switch cycles	→ 📄 146
Max. switch cycles number	→ 📄 146

Parameter overview with brief description

Parameter	Description	User interface
Switch status	Shows the current relay switch status.	▪ Open ▪ Closed
Switch cycles	Shows number of all performed switch cycles.	Positive integer
Max. switch cycles number	Shows the maximal number of guaranteed switch cycles.	Positive integer

11.5 Adapting the measuring device to the process conditions

The following are available for this purpose:
- Basic settings using the**Setup** menu (→ 🗎 93)
- Advanced settings using the**Advanced setup** submenu (→ 🗎 121)

11.6 Performing a totalizer reset

The totalizers are reset in the **Operation** submenu:
- Control Totalizer
- Reset all totalizers

Navigation
"Operation" menu → Totalizer handling

▶ **Totalizer handling**	
Control Totalizer 1 to n	→ 🗎 147
Preset value 1 to n	→ 🗎 147
Reset all totalizers	→ 🗎 147

Parameter overview with brief description

Parameter	Prerequisite	Description	Selection / User entry	Factory setting
Control Totalizer 1 to n	One of the following options is selected in the **Assign process variable** parameter (→ 🗎 125)**Totalizer 1 to n** submenu: ▪ Volume flow ▪ Mass flow ▪ Corrected volume flow ▪ Target mass flow * ▪ Carrier mass flow *	Control totalizer value.	▪ Totalize ▪ Reset + hold ▪ Preset + hold ▪ Reset + totalize ▪ Preset + totalize ▪ Hold	Totalize
Preset value 1 to n	One of the following options is selected in the **Assign process variable** parameter (→ 🗎 125)**Totalizer 1 to n** submenu: ▪ Volume flow ▪ Mass flow ▪ Corrected volume flow ▪ Target mass flow * ▪ Carrier mass flow *	Specify start value for totalizer. *Dependency* ℹ The unit of the selected process variable is specified for the totalizer in the **Unit totalizer** parameter (→ 🗎 125).	Signed floating-point number	Country-specific: ▪ 0 kg ▪ 0 lb
Reset all totalizers	–	Reset all totalizers to 0 and start.	▪ Cancel ▪ Reset + totalize	Cancel

* Visibility depends on order options or device settings

11.6.1 Function scope of the "Control Totalizer" parameter

Options	Description
Totalize	The totalizer is started or continues running.
Reset + hold	The totaling process is stopped and the totalizer is reset to 0.
Preset + hold	The totaling process is stopped and the totalizer is set to its defined start value from the **Preset value** parameter.
Reset + totalize	The totalizer is reset to 0 and the totaling process is restarted.
Preset + totalize	The totalizer is set to the defined start value from the **Preset value** parameter and the totaling process is restarted.
Hold	Totalizing is stopped.

11.6.2 Function scope of the "Reset all totalizers" parameter

Options	Description
Cancel	No action is executed and the user exits the parameter.
Reset + totalize	Resets all totalizers to 0 and restarts the totaling process. This deletes all the flow values previously totalized.

11.7 Showing data logging

The **Extended HistoROM** application package must be enabled in the device (order option) for the **Data logging** submenu to appear. This contains all the parameters for the measured value history.

ℹ Data logging is also available via:
- Plant Asset Management Tool FieldCare → 🗎 83.
- Web browser

Function range

- A total of 1000 measured values can be stored
- 4 logging channels
- Adjustable logging interval for data logging
- Display of the measured value trend for each logging channel in the form of a chart

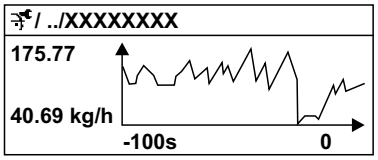

A0016357

33 *Chart of a measured value trend*

- x-axis: depending on the number of channels selected displays 250 to 1000 measured values of a process variable.
- y-axis: displays the approximate measured value span and constantly adapts this to the ongoing measurement.

If the length of the logging interval or the assignment of the process variables to the channels is changed, the content of the data logging is deleted.

Navigation

"Diagnostics" menu → Data logging

▶ Data logging	
Assign channel 1...4	→ 149
Logging interval	→ 149
Clear logging data	→ 149
Data logging	→ 149
Logging delay	→ 149
Data logging control	→ 149
Data logging status	→ 149
Entire logging duration	→ 149

Parameter overview with brief description

Parameter	Prerequisite	Description	Selection / User entry / User interface	Factory setting
Assign channel 1 to n	The **Extended HistoROM** application package is available.	Assign process variable to logging channel.	▪ Off ▪ Mass flow ▪ Volume flow ▪ Corrected volume flow ▪ Target mass flow * ▪ Carrier mass flow * ▪ Density ▪ Reference density ▪ Concentration * ▪ Temperature ▪ Carrier pipe temperature * ▪ Electronic temperature ▪ Oscillation frequency 0 ▪ Frequency fluctuation 0 ▪ Oscillation amplitude * ▪ Oscillation damping 0 ▪ Oscillation damping fluctuation 0 ▪ Signal asymmetry ▪ Exciter current 0 ▪ Current output 1 ▪ Current output 2 * ▪ Current output 3 * ▪ Current output 4 * ▪ HBSI	Off
Logging interval	The **Extended HistoROM** application package is available.	Define the logging interval for data logging. This value defines the time interval between the individual data points in the memory.	0.1 to 999.0 s	1.0 s
Clear logging data	The **Extended HistoROM** application package is available.	Clear the entire logging data.	▪ Cancel ▪ Clear data	Cancel
Data logging	–	Select the data logging method.	▪ Overwriting ▪ Not overwriting	Overwriting
Logging delay	In the **Data logging** parameter, the **Not overwriting** option is selected.	Enter the time delay for measured value logging.	0 to 999 h	0 h
Data logging control	In the **Data logging** parameter, the **Not overwriting** option is selected.	Start and stop measured value logging.	▪ None ▪ Delete + start ▪ Stop	None
Data logging status	In the **Data logging** parameter, the **Not overwriting** option is selected.	Displays the measured value logging status.	▪ Done ▪ Delay active ▪ Active ▪ Stopped	Done
Entire logging duration	In the **Data logging** parameter, the **Not overwriting** option is selected.	Displays the total logging duration.	Positive floating-point number	0 s

* Visibility depends on order options or device settings

12 Diagnostics and troubleshooting

12.1 General troubleshooting

For local display

Error	Possible causes	Solution
Local display dark and no output signals	Supply voltage does not match the value indicated on the nameplate.	Apply the correct supply voltage .
Local display dark and no output signals	The polarity of the supply voltage is wrong.	Correct the polarity.
Local display dark and no output signals	No contact between connecting cables and terminals.	Check the connection of the cables and correct if necessary.
Local display dark and no output signals	Terminals are not plugged into the I/O electronics module correctly. Terminals are not plugged into the main electronics module correctly.	Check terminals.
Local display dark and no output signals	I/O electronics module is defective. Main electronics module is defective.	Order spare part → 🗎 194.
Local display dark and no output signals	The connector between the main electronics module and display module is not plugged in correctly.	Check the connection and correct if necessary.
Local display dark and no output signals	The connecting cable is not plugged in correctly.	1. Check the connection of the electrode cable and correct if necessary. 2. Check the connection of the coil current cable and correct if necessary.
Local display is dark, but signal output is within the valid range	Display is set too bright or too dark.	▪ Set the display brighter by simultaneously pressing ⊞ + Ⓔ. ▪ Set the display darker by simultaneously pressing ⊟ + Ⓔ.
Local display is dark, but signal output is within the valid range	The cable of the display module is not plugged in correctly.	Insert the plug correctly into the main electronics module and display module.
Local display is dark, but signal output is within the valid range	Display module is defective.	Order spare part → 🗎 194.
Backlighting of local display is red	Diagnostic event with "Alarm" diagnostic behavior has occurred.	Take remedial measures
Text on local display appears in a foreign language and cannot be understood.	Incorrect operating language is configured.	1. Press ⊟ + ⊞ for 2 s ("home position"). 2. Press Ⓔ. 3. Set the desired language in the **Display language** parameter (→ 🗎 128).
Message on local display: "Communication Error" "Check Electronics"	Communication between the display module and the electronics is interrupted.	▪ Check the cable and the connector between the main electronics module and display module. ▪ Order spare part → 🗎 194.

For output signals

Error	Possible causes	Solution
Signal output outside the valid range	Main electronics module is defective.	Order spare part → 🗎 194.
Device shows correct value on local display, but signal output is incorrect, though in the valid range.	Configuration error	Check and correct the parameter configuration.
Device measures incorrectly.	Configuration error or device is operated outside the application.	1. Check and correct parameter configuration. 2. Observe limit values specified in the "Technical Data".

For access

Error	Possible causes	Solution
No write access to parameters	Hardware write protection enabled	Set the write protection switch on main electronics module to the **OFF** position → 🗎 137.
No write access to parameters	Current user role has limited access authorization	1. Check user role → 🗎 72. 2. Enter correct customer-specific access code → 🗎 72.
No connection via FOUNDATION Fieldbus	Device plug connected incorrectly	Check the pin assignment of the connector .
Not connecting to Web server	Web server disabled	Using the "FieldCare" or "DeviceCare" operating tool, check whether the Web server of the measuring device is enabled, and enable it if necessary → 🗎 79.
	Incorrect setting for the Ethernet interface of the computer	1. Check the properties of the Internet protocol (TCP/IP) . 2. Check the network settings with the IT manager.
Not connecting to Web server	Incorrect WLAN access data	▪ Check WLAN network status. ▪ Log on to the device again using WLAN access data. ▪ Verify that WLAN is enabled on the measuring device and operating device .
	WLAN communication disabled	–
Not connecting to Web server, FieldCare or DeviceCare	No WLAN network available	▪ Check if WLAN reception is present: LED on display module is lit blue ▪ Check if WLAN connection is enabled: LED on display module flashes blue ▪ Switch on instrument function.
Network connection not present or unstable	WLAN network is weak.	▪ Operating device is outside of reception range: Check network status on operating device. ▪ To improve network performance, use an external WLAN antenna.
	Parallel WLAN and Ethernet communication	▪ Check network settings. ▪ Temporarily enable only the WLAN as an interface.
Web browser frozen and operation no longer possible	Data transfer active	Wait until data transfer or current action is finished.

Error	Possible causes	Solution
	Connection lost	1. Check cable connection and power supply. 2. Refresh the Web browser and restart if necessary.
Content of Web browser incomplete or difficult to read	Not using optimum version of Web server.	1. Use the correct Web browser version . 2. Clear the Web browser cache and restart the Web browser.
	Unsuitable view settings.	Change the font size/display ratio of the Web browser.
No or incomplete display of contents in the Web browser	▪ JavaScript not enabled ▪ JavaScript cannot be enabled	1. Enable JavaScript. 2. Enter http://XXX.XXX.X.XXX/basic.html as the IP address.
Operation with FieldCare or DeviceCare via CDI-RJ45 service interface (port 8000)	Firewall of computer or network is preventing communication	Depending on the settings of the firewall used on the computer or in the network, the firewall must be adapted or disabled to allow FieldCare/DeviceCare access.
Flashing of firmware with FieldCare or DeviceCare via CDI-RJ45 service interface (via port 8000 or TFTP ports)	Firewall of computer or network is preventing communication	Depending on the settings of the firewall used on the computer or in the network, the firewall must be adapted or disabled to allow FieldCare/DeviceCare access.

12.2 Diagnostic information via light emitting diodes

12.2.1 Transmitter

Proline 500 – digital

Different LEDs in the transmitter provide information on the device status.

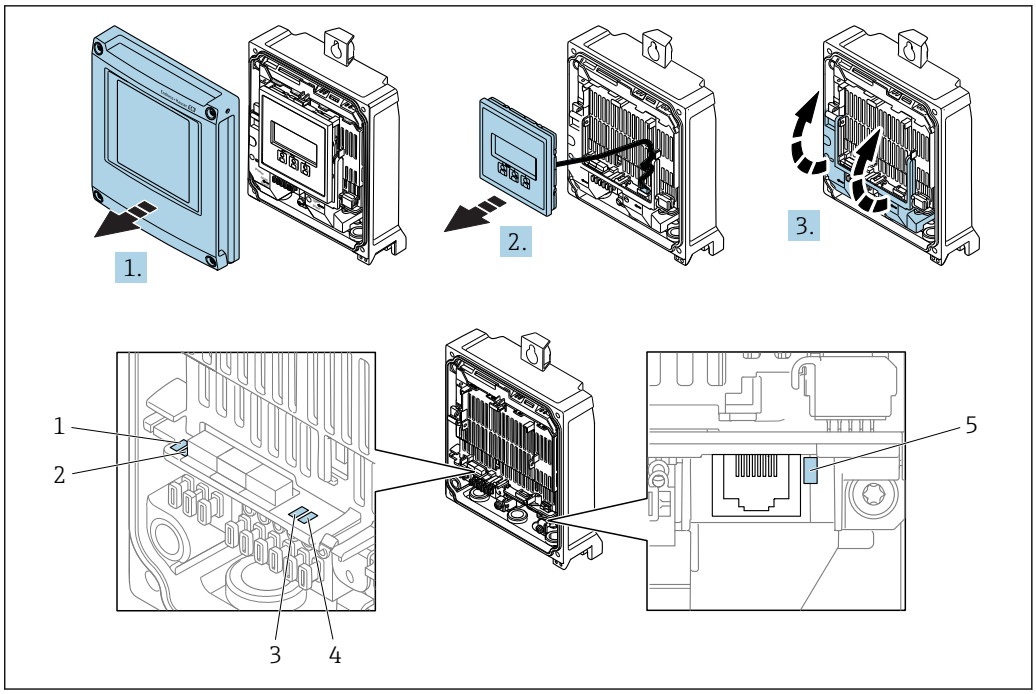

1 Supply voltage
2 Device status
3 Not used
4 Communication
5 Service interface (CDI) active

1. Open the housing cover.
2. Remove the display module.
3. Fold open the terminal cover.

LED	Color	Meaning
1 Supply voltage	Green	Supply voltage is ok
	Off	Supply voltage is off or too low
2 Device status	Green	Device is OK
	Red	Error
	Flashing red	Warning
3 Not used	–	–
4 Communication	Flashing white	Communication active
5 Service interface (CDI)	Yellow	Connection established
	Flashing yellow	Communication active
	Off	No connection

Proline 500

Different LEDs in the transmitter provide information on the device status.

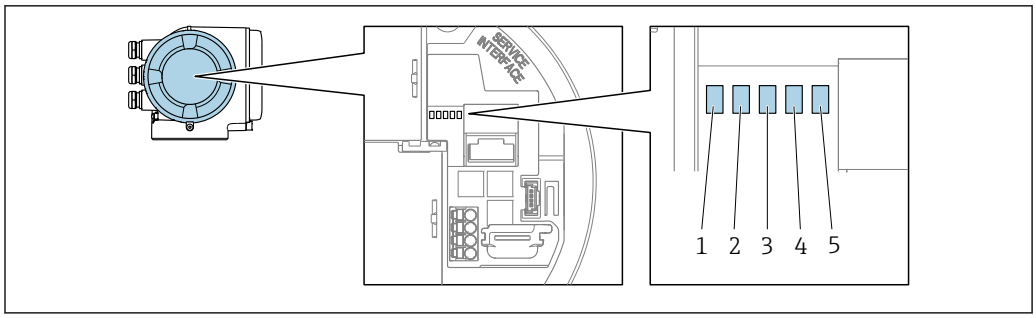

A0029629

1 *Supply voltage*
2 *Device status*
3 *Not used*
4 *Communication*
5 *Service interface (CDI) active*

LED		Color	Meaning
1	Supply voltage	Green	Supply voltage is ok
		Off	Supply voltage is off or too low
2	Device status	Red	Error
		Flashing red	Warning
3	Not used	–	–
4	Communication	White	Communication active
5	Service interface (CDI)	Yellow	Connection established
		Flashing yellow	Communication active
		Off	No connection

12.2.2 Sensor connection housing

Proline 500 – digital

Various light emitting diodes (LED) on the ISEM electronics (Intelligent Sensor Electronic Module) in the sensor connection housing provide information on the device status.

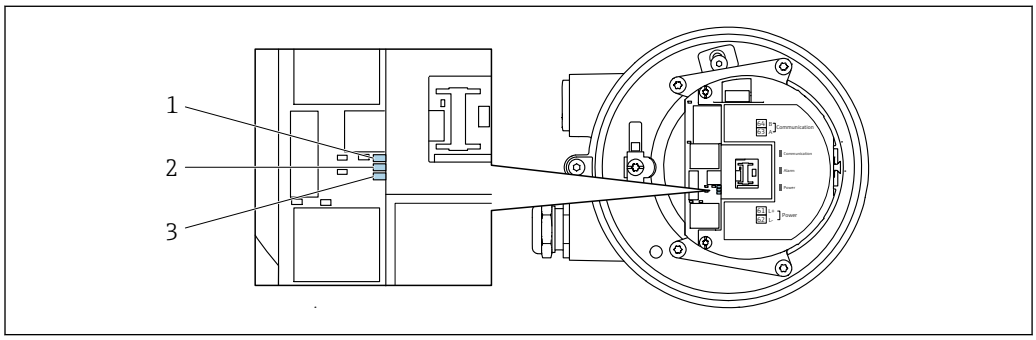

A0029699

1 *Communication*
2 *Device status*
3 *Supply voltage*

LED		Color	Meaning
1	Communication	White	Communication active
2	Device status	Red	Error
		Flashing red	Warning

LED	Color	Meaning
3 Supply voltage	Green	Supply voltage is ok
	Off	Supply voltage is off or too low

12.3 Diagnostic information on local display

12.3.1 Diagnostic message

Faults detected by the self-monitoring system of the measuring device are displayed as a diagnostic message in alternation with the operational display.

Operational display in alarm condition	Diagnostic message

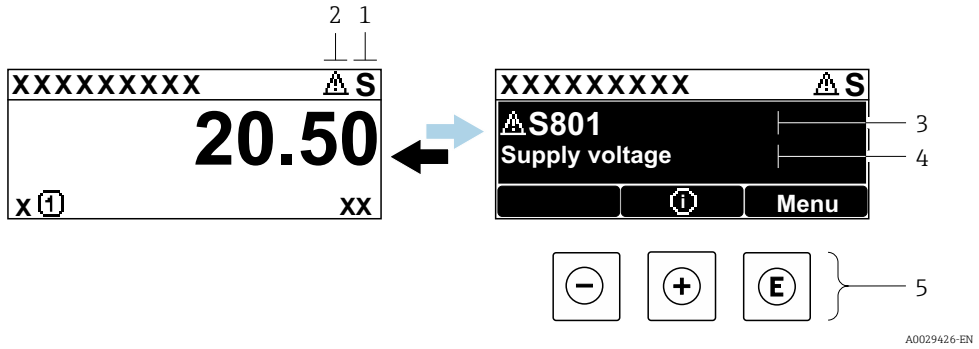

1 *Status signal*
2 *Diagnostic behavior*
3 *Diagnostic behavior with diagnostic code*
4 *Short text*
5 *Operating elements*

If two or more diagnostic events are pending simultaneously, only the message of the diagnostic event with the highest priority is shown.

Other diagnostic events that have occurred can be displayed in the **Diagnostics** menu:
- Via parameter
- Via submenus → 187

Status signals

The status signals provide information on the state and reliability of the device by categorizing the cause of the diagnostic information (diagnostic event).

The status signals are categorized according to VDI/VDE 2650 and NAMUR Recommendation NE 107: F = Failure, C = Function Check, S = Out of Specification, M = Maintenance Required

Symbol	Meaning
F	**Failure** A device error has occurred. The measured value is no longer valid.
C	**Function check** The device is in service mode (e.g. during a simulation).
S	**Out of specification** The device is operated: Outside its technical specification limits (e.g. outside the process temperature range)
M	**Maintenance required** Maintenance is required. The measured value remains valid.

Diagnostic behavior

Symbol	Meaning
⊗	**Alarm** ▪ Measurement is interrupted. ▪ Signal outputs and totalizers assume the defined alarm condition. ▪ A diagnostic message is generated.
⚠	**Warning** Measurement is resumed. The signal outputs and totalizers are not affected. A diagnostic message is generated.

Diagnostic information

The fault can be identified using the diagnostic information. The short text helps you by providing information about the fault. In addition, the corresponding symbol for the diagnostic behavior is displayed in front of the diagnostic information on the local display.

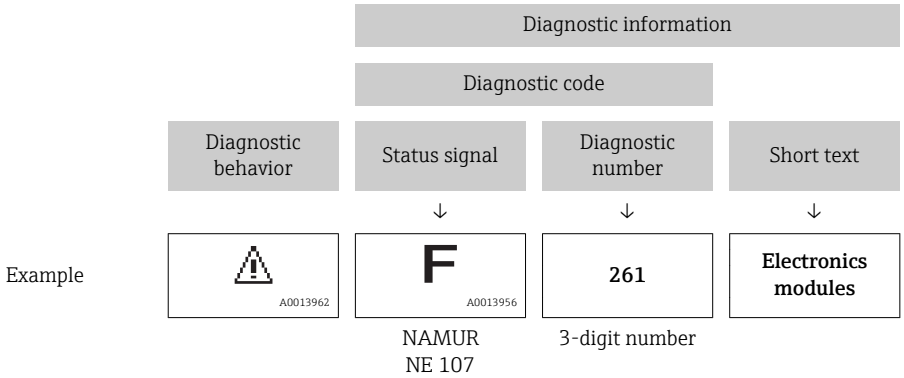

Operating elements

Key	Meaning
⊕	**Plus key** *In a menu, submenu* Opens the message about remedy information.
Ⓔ	**Enter key** *In a menu, submenu* Opens the operating menu.

12.3.2 Calling up remedial measures

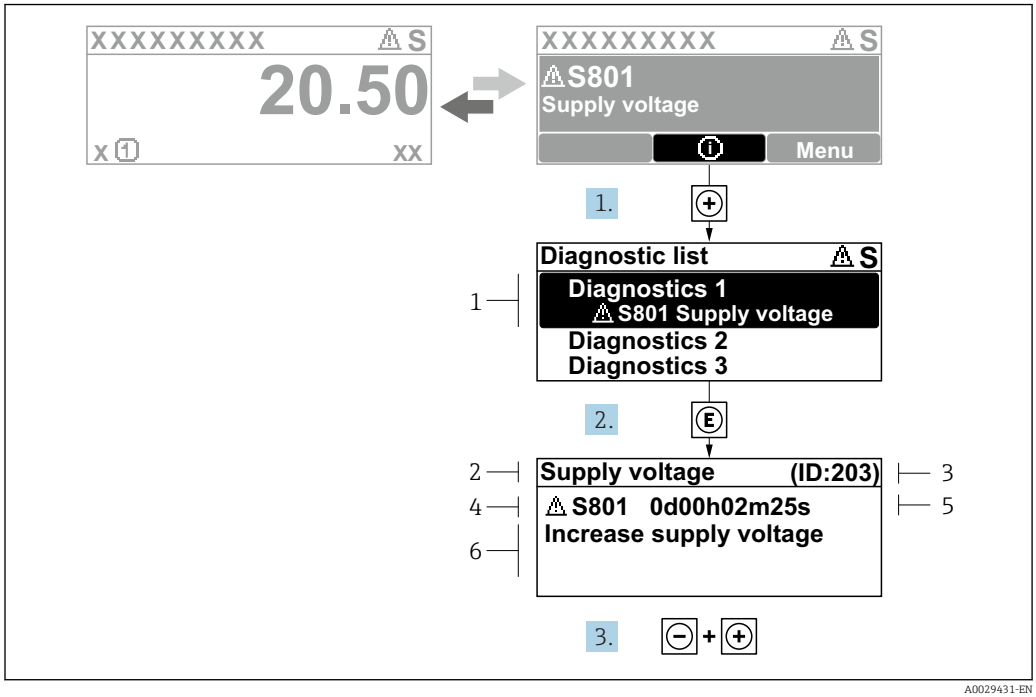

34 *Message about remedial measures*

1 *Diagnostic information*
2 *Short text*
3 *Service ID*
4 *Diagnostic behavior with diagnostic code*
5 *Operation time of occurrence*
6 *Remedial measures*

1. The user is in the diagnostic message.
   Press ⊞ (ⓘ symbol).
   ↳ The **Diagnostic list** submenu opens.
2. Select the desired diagnostic event with ⊞ or ⊟ and press Ⓔ .
   ↳ The message about the remedial measures opens.
3. Press ⊟ + ⊞ simultaneously.
   ↳ The message about the remedial measures closes.

The user is in the **Diagnostics** menu at an entry for a diagnostics event, e.g. in the **Diagnostic list** submenu or **Previous diagnostics** parameter.

1. Press Ⓔ.
   ↳ The message for the remedial measures for the selected diagnostic event opens.
2. Press ⊟ + ⊞ simultaneously.
   ↳ The message for the remedial measures closes.

12.4 Diagnostic information in the Web browser

12.4.1 Diagnostic options

Any faults detected by the measuring device are displayed in the Web browser on the home page once the user has logged on.

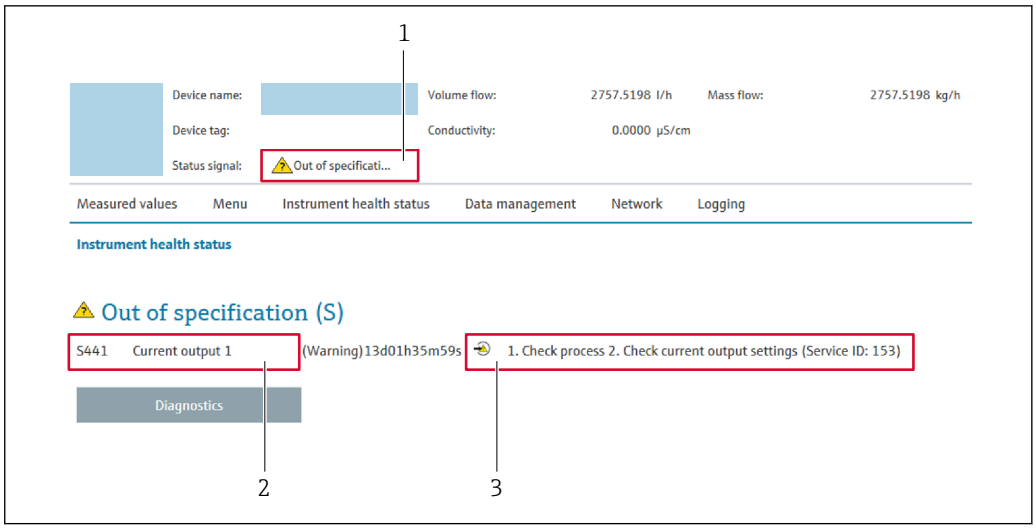

A0031056

1 *Status area with status signal*
2 *Diagnostic information→ 📄 157*
3 *Remedy information with Service ID*

In addition, diagnostic events which have occurred can be shown in the **Diagnostics** menu:
- Via parameter
- Via submenu → 📄 187

Status signals

The status signals provide information on the state and reliability of the device by categorizing the cause of the diagnostic information (diagnostic event).

Symbol	Meaning
⊗	**Failure** A device error has occurred. The measured value is no longer valid.
▽	**Function check** The device is in service mode (e.g. during a simulation).
⚠	**Out of specification** The device is operated: Outside its technical specification limits (e.g. outside the process temperature range)
◇	**Maintenance required** Maintenance is required. The measured value is still valid.

The status signals are categorized in accordance with VDI/VDE 2650 and NAMUR Recommendation NE 107.

12.4.2 Calling up remedy information

Remedy information is provided for every diagnostic event to ensure that problems can be rectified quickly. These measures are displayed in red along with the diagnostic event and the related diagnostic information.

12.5 Diagnostic information in DeviceCare or FieldCare

12.5.1 Diagnostic options

Any faults detected by the measuring device are displayed on the home page of the operating tool once the connection has been established.

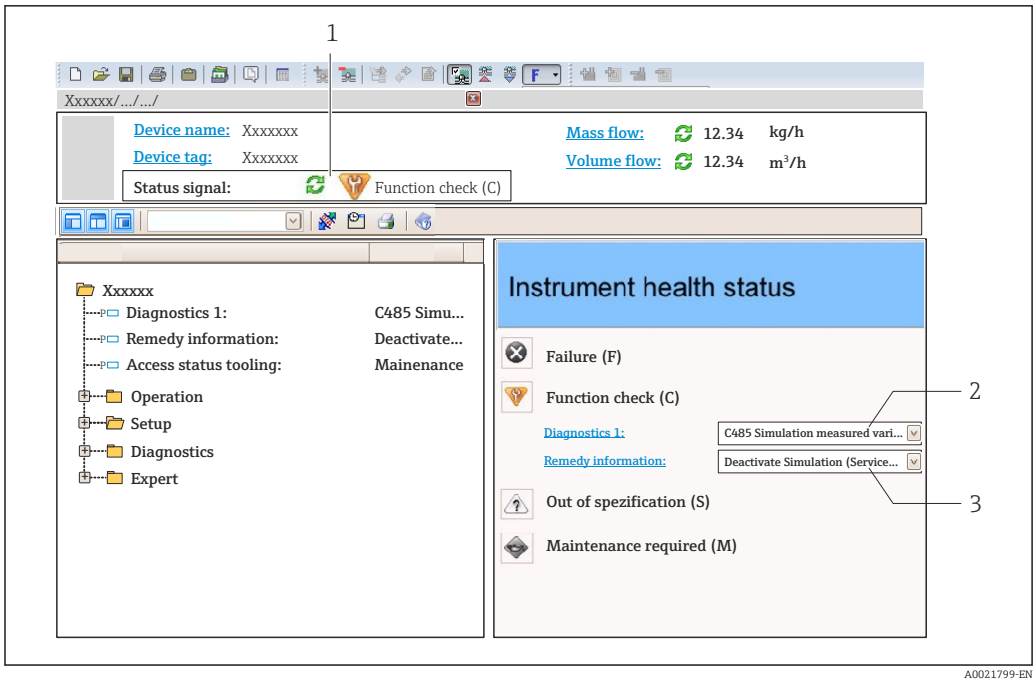

1 *Status area with status signal→ 📄 156*
2 *Diagnostic information→ 📄 157*
3 *Remedy information with Service ID*

In addition, diagnostic events which have occurred can be shown in the **Diagnostics** menu:
- Via parameter
- Via submenu → 📄 187

Diagnostic information

The fault can be identified using the diagnostic information. The short text helps you by providing information about the fault. In addition, the corresponding symbol for the diagnostic behavior is displayed in front of the diagnostic information on the local display.

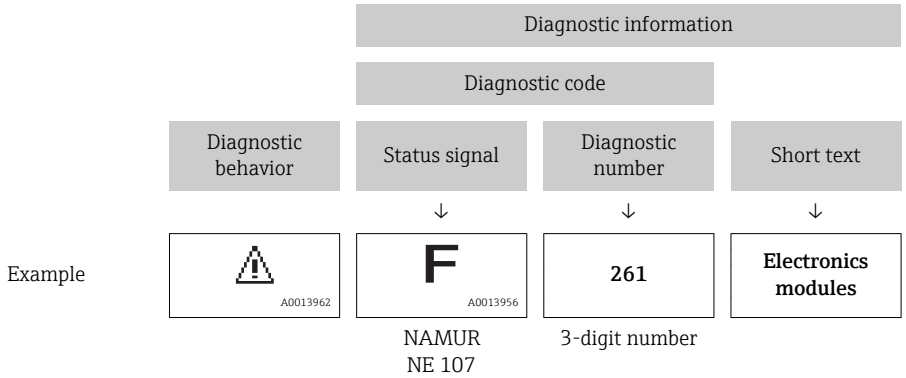

12.5.2 Calling up remedy information

Remedy information is provided for every diagnostic event to ensure that problems can be rectified quickly:
- On the home page
  Remedy information is displayed in a separate field below the diagnostics information.
- In the **Diagnostics** menu
  Remedy information can be called up in the working area of the user interface.

The user is in the **Diagnostics** menu.

1. Call up the desired parameter.
2. On the right in the working area, mouse over the parameter.
   ↳ A tool tip with remedy information for the diagnostic event appears.

12.6 Adapting the diagnostic information

12.6.1 Adapting the diagnostic behavior

Each item of diagnostic information is assigned a specific diagnostic behavior at the factory. The user can change this assignment for specific diagnostic information in the **Diagnostic behavior** submenu.

Expert → System → Diagnostic handling → Diagnostic behavior

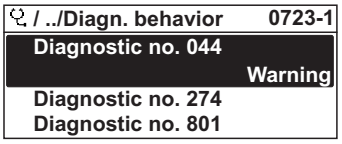

35 Taking the example of the local display

You can assign the following options to the diagnostic number as the diagnostic behavior:

Options	Description
Alarm	The device stops measurement. The signal outputs and totalizers assume the defined alarm condition. A diagnostic message is generated. The background lighting changes to red.
Warning	The device continues to measure. The signal outputs and totalizers are not affected. A diagnostic message is generated.
Logbook entry only	The device continues to measure. The diagnostic message is displayed only in the **Event logbook** submenu (**Event list** submenu) and is not displayed in alternation with the operational display.
Off	The diagnostic event is ignored, and no diagnostic message is generated or entered.

12.6.2 Adapting the status signal

Each item of diagnostic information is assigned a specific status signal at the factory. The user can change this assignment for specific diagnostic information in the **Diagnostic event category** submenu.

Expert → Communication → Diagnostic event category

Available status signals

Configuration as per FOUNDATION Fieldbus Specification (FF912), in accordance with NAMUR NE107.

Symbol	Meaning
F A0013956	**Failure** A device error is present. The measured value is no longer valid.
C A0013959	**Function check** The device is in service mode (e.g. during a simulation).

Symbol	Meaning
S A0013958	**Out of specification** The device is being operated: ▪ Outside its technical specification limits (e.g. outside the process temperature range) ▪ Outside of the configuration carried out by the user (e.g. maximum flow in parameter **20 mA value**)
M A0013957	**Maintenance required** Maintenance is required. The measured value is still valid.

Enabling the configuration of the diagnostic information according to FF912

For compatibility reasons, the configuration of the diagnostic information according to FOUNDATION Fieldbus Specification FF912 is not enabled when the device is delivered from the factory.

Enabling the configuration of the diagnostic information according to FOUNDATION Fieldbus Specification FF912

1. Open the Resource block.
2. In **Feature Selection** parameter, select **Multi-bit Alarm (Bit-Alarm) Support** option.
   ↳ The diagnostic information can be configured according to FOUNDATION Fieldbus Specification FF912.

Grouping the diagnostic information

Diagnostic information is assigned to different groups. The groups differ depending on the weighting (severity) of the diagnostic event:
- Highest weighting
- High weighting
- Low weighting

Assignment of the diagnostic information (factory setting)

The assignment of the diagnostic information ex-works is indicated in the following tables.

The individual ranges of the diagnostic information can be assigned to another status signal → 📄 163.

Some diagnostic information can be assigned individually, irrespective of their range → 📄 164.

ℹ Overview and description of all diagnostic information → 📄 165

Weighting	Status signal (factory setting)	Allocation	Diagnostic information range
Highest	Failure (F)	Sensor	F000 to 199
		Electronics	F200 to 399
		Configuration	F400 to 700
		Process	F800 to 999

Weighting	Status signal (factory setting)	Allocation	Diagnostic information range
High	Function check (C)	Sensor	C000 to 199
		Electronics	C200 to 399

Weighting	Status signal (factory setting)	Allocation	Diagnostic information range
		Configuration	C400 to 700
		Process	C800 to 999

Weighting	Status signal (factory setting)	Allocation	Diagnostic information range
Low	Out of specification (S)	Sensor	S000 to 199
		Electronics	S200 to 399
		Configuration	S400 to 700
		Process	S800 to 999

Weighting	Status signal (factory setting)	Allocation	Diagnostic information range
Low	Maintenance required (M)	Sensor	M000 to 199
		Electronics	M200 to 399
		Configuration	M400 to 700
		Process	M800 to 999

Changing the assignment of the diagnostic information

The individual ranges of the diagnostic information can be assigned to another status signal. This is done by changing the bit in the associated parameter. The bit change always applies for the entire range of the diagnostic information.

Some diagnostic information can be assigned individually, irrespective of their range → 164

Each status signal has a parameter in the Resource Block in which it is possible to define the diagnostic event for which the status signal is transmitted:
- Failure (F): **FD_FAIL_MAP** parameter
- Function check (C): **FD_CHECK_MAP** parameter
- Out of specification (S): **FD_OFFSPEC_MAP** parameter
- Maintenance required (M): **FD_MAINT_MAP** parameter

Structure and assignment of the parameters for the status signals (factory setting)

Weighting	Allocation	Bit	FD_FAIL_MAP	FD_CHECK_MAP	FD_OFFSPEC_MAP	FD_MAINT_MAP
Highest	Sensor	31	**1**	0	0	0
	Electronics	30	**1**	0	0	0
	Configuration	29	**1**	0	0	0
	Process	28	**1**	0	0	0
High	Sensor	27	0	**1**	0	0
	Electronics	26	0	**1**	0	0
	Configuration	25	0	**1**	0	0
	Process	24	0	**1**	0	0
Low	Sensor	23	0	0	**1**	0
	Electronics	22	0	0	**1**	0
	Configuration	21	0	0	**1**	0

Weighting	Allocation	Bit	FD_ FAIL_ MAP	FD_ CHECK_ MAP	FD_ OFFSPEC_ MAP	FD_ MAINT_ MAP
	Process	20	0	0	**1**	0
Low	Sensor	19	0	0	0	**1**
	Electronics	18	0	0	0	**1**
	Configuration	17	0	0	0	**1**
	Process	16	0	0	0	**1**
Configurable range → 🗎 164		15 to 1	0	0	0	0
Reserved (Fieldbus Foundation)		0	0	0	0	0

Changing the status signal for a range of diagnostic information

Example: The status signal for the diagnostic information for electronics with the "Highest" weighting is to be changed from failure (F) to function check (C).

1. Set the Resource Block to the **OOS** block mode.
2. Open the **FD_FAIL_MAP** parameter in the Resource Block.
3. Change **Bit 30** to **0** in the parameter.
4. Open the **FD_CHECK_MAP** parameter in the Resource Block.
5. Change **Bit 26** to **1** in the parameter.
   ↳ If a diagnostic event occurs for electronics with the "Highest weighting", the diagnostic information to this effect is displayed with the function check (C) status signal.
6. Set the Resource Block to the **AUTO** block mode.

NOTICE

No status signal is assigned to an area of diagnostic information.
If a diagnostic event occurs in this area, no status signal is transmitted to the control system.
- If you are changing the parameters, make sure that a status signal is assigned to all areas.

ℹ If FieldCare is used, the status signal is enabled and disabled using the check box of the particular parameter.

Assigning diagnostic information individually to a status signal

Some diagnostic information can be individually assigned to a status signal, irrespective of their original range.

Assigning diagnostic information individually to a status signal via FieldCare.

1. In the FieldCare navigation window: **Expert** → **Communication** → **Field diagnostics** → **Alarm detection enable**
2. Select the desired diagnostic information from one of the fields **Configurable Area Bits 1** to **Configurable Area Bits 15**.
3. Press Enter to confirm.
4. When selecting the desired status signal (e.g. Offspec Map), also select the **Configurable Area Bit 1** to **Configurable Area Bit 15** that was assigned previously to the diagnostic information (step 2).
5. Press Enter to confirm.
   ↳ The diagnostic event of the selected diagnostic information is recorded.

6. In the FieldCare navigation window: **Expert** → **Communication** → **Field diagnostics** → **Alarm broadcast enable**
7. Select the desired diagnostic information from one of the fields **Configurable Area Bits 1** to **Configurable Area Bits 15**.
8. Press Enter to confirm.
9. When selecting the desired status signal (e.g. Offspec Map), also select the **Configurable Area Bit 1** to **Configurable Area Bit 15** that was assigned previously to the diagnostic information (step 7).
10. Press Enter to confirm.
    ↳ The selected diagnostic information is transmitted over the bus when a diagnostic event to this effect occurs.

A change in the status signal does not affect diagnostic information that already exists. The new status signal is only assigned if this error occurs again after the status signal has changed.

Transmitting the diagnostic information over the bus

Prioritizing diagnostic information for transmission over the bus

Diagnostic information is only transmitted over the bus if its priority is between 2 and 15. Priority 1-events are displayed but are not transmitted over the bus. Diagnostic information with priority 0 (factory setting) is ignored.

It is possible to change the priority individually for the different status signals. The following parameters of the Resource Block are used for this purpose:
- FD_FAIL_PRI
- FD_CHECK_PRI
- FD_OFFSPEC_PRI
- FD_MAINT_PRI

Suppressing certain diagnostic information

It is possible to suppress certain events during transmission over the bus using a mask. While these events are displayed they are not transmitted over the bus. This mask is in FieldCare **Expert** → **Communication** → **Field diagnostics** → **Alarm broadcast enable**. The mask is a negative selection mask, i.e. if a field is selected the associated diagnostic information is not transmitted over the bus.

12.7 Overview of diagnostic information

The amount of diagnostic information and the number of measured variables affected increase if the measuring device has one or more application packages.

In the case of some items of diagnostic information, the status signal and the diagnostic behavior can be changed. Change the diagnostic information → 📄 161

12.7.1 Diagnostic of sensor

Diagnostic information			Remedy instructions	Influenced measured variables
No.	Short text			
022	Temperature sensor defective		1. Check or replace sensor electronic module (ISEM) 2. If available: Check connection cable between sensor and transmitter 3. Replace sensor	▪ Empty pipe detection ▪ Low flow cut off ▪ Switch output status ▪ Pressure
	Measured variable status			
	Quality	Bad		
	Quality substatus	Sensor failure		
	Status signal [from the factory] [1]	F		
	Diagnostic behavior	Alarm		

1) Status signal can be changed.

Diagnostic information			Remedy instructions	Influenced measured variables
No.	Short text			
046	Sensor limit exceeded		1. Inspect sensor 2. Check process condition	▪ Empty pipe detection ▪ Low flow cut off ▪ Switch output status ▪ Pressure
	Measured variable status [from the factory] [1]			
	Quality	Good		
	Quality substatus	Non specific		
	Status signal [from the factory] [2]	S		
	Diagnostic behavior [from the factory] [3]	Warning		

1) Quality can be changed. This causes the overall status of the measured variable to change.
2) Status signal can be changed.
3) Diagnostic behavior can be changed.

Diagnostic information			Remedy instructions	Influenced measured variables
No.	Short text			
062	Sensor connection faulty		1. Check or replace sensor electronic module (ISEM) 2. If available: Check connection cable between sensor and transmitter 3. Replace sensor	▪ Empty pipe detection ▪ Low flow cut off ▪ Switch output status ▪ Pressure
	Measured variable status			
	Quality	Bad		
	Quality substatus	Sensor failure		
	Status signal [from the factory] [1]	F		
	Diagnostic behavior	Alarm		

1) Status signal can be changed.

Diagnostic information			Remedy instructions	Influenced measured variables
No.	Short text			
063	Exciter current faulty		1. Check or replace sensor electronic module (ISEM) 2. If available: Check connection cable between sensor and transmitter 3. Replace sensor	▪ Empty pipe detection ▪ Low flow cut off
	Measured variable status			
	Quality	Bad		
	Quality substatus	Sensor failure		
	Status signal [from the factory] [1]	S		
	Diagnostic behavior	Alarm		

1) Status signal can be changed.

Diagnostic information			Remedy instructions	Influenced measured variables
No.	Short text			
082	Data storage		1. Check module connections 2. Contact service	▪ Empty pipe detection ▪ Low flow cut off ▪ Switch output status ▪ Pressure
	Measured variable status			
	Quality	Bad		
	Quality substatus	Sensor failure		
	Status signal [from the factory] [1]	F		
	Diagnostic behavior	Alarm		

1) Status signal can be changed.

Diagnostic information			Remedy instructions	Influenced measured variables
No.	Short text			
083	Memory content		1. Restart device 2. Restore HistoROM S-DAT backup ('Device reset' parameter) 3. Replace HistoROM S-DAT	▪ Empty pipe detection ▪ Low flow cut off ▪ Switch output status ▪ Pressure
	Measured variable status			
	Quality	Bad		
	Quality substatus	Sensor failure		
	Status signal [from the factory] [1]	F		
	Diagnostic behavior	Alarm		

1) Status signal can be changed.

Diagnostic information			Remedy instructions	Influenced measured variables
No.	Short text			
140	Sensor signal asymmetrical		1. Check or replace sensor electronic module (ISEM) 2. If available: Check connection cable between sensor and transmitter 3. Replace sensor	▪ Empty pipe detection ▪ Low flow cut off ▪ Switch output status ▪ Pressure
	Measured variable status [from the factory] [1]			
	Quality	Good		
	Quality substatus	Non specific		
	Status signal [from the factory] [2]	S		
	Diagnostic behavior [from the factory] [3]	Alarm		

1) Quality can be changed. This causes the overall status of the measured variable to change.
2) Status signal can be changed.
3) Diagnostic behavior can be changed.

Diagnostic information			Remedy instructions	Influenced measured variables
No.	Short text			
144	Measuring error too high		1. Check or change sensor 2. Check process conditions	▪ Empty pipe detection ▪ Low flow cut off ▪ Switch output status ▪ Pressure
	Measured variable status [from the factory] 1)			
	Quality	Good		
	Quality substatus	Non specific		
	Status signal [from the factory] 2)	F		
	Diagnostic behavior [from the factory] 3)	Alarm		

1) Quality can be changed. This causes the overall status of the measured variable to change.
2) Status signal can be changed.
3) Diagnostic behavior can be changed.

12.7.2 Diagnostic of electronic

Diagnostic information			Remedy instructions	Influenced measured variables
No.	Short text			
201	Device failure		1. Restart device 2. Contact service	▪ Empty pipe detection ▪ Low flow cut off ▪ Switch output status ▪ Pressure
	Measured variable status			
	Quality	Bad		
	Quality substatus	Device failure		
	Status signal [from the factory] 1)	F		
	Diagnostic behavior	Alarm		

1) Status signal can be changed.

Diagnostic information			Remedy instructions	Influenced measured variables
No.	Short text			
242	Software incompatible		1. Check software 2. Flash or change main electronics module	▪ Empty pipe detection ▪ Low flow cut off ▪ Switch output status ▪ Pressure
	Measured variable status			
	Quality	Bad		
	Quality substatus	Device failure		
	Status signal [from the factory] 1)	F		
	Diagnostic behavior	Alarm		

1) Status signal can be changed.

Diagnostic information			Remedy instructions	Influenced measured variables
No.	Short text			
252	Modules incompatible		1. Check electronic modules 2. Change electronic modules	▪ Empty pipe detection ▪ Low flow cut off ▪ Switch output status ▪ Pressure
	Measured variable status			
	Quality	Bad		
	Quality substatus	Device failure		
	Status signal [from the factory] [1]	F		
	Diagnostic behavior	Alarm		

1) Status signal can be changed.

Diagnostic information			Remedy instructions	Influenced measured variables
No.	Short text			
262	Sensor electronic connection faulty		1. Check or replace connection cable between sensor electronic module (ISEM) and main electronics 2. Check or replace ISEM or main electronics	▪ Empty pipe detection ▪ Low flow cut off ▪ Pressure
	Measured variable status			
	Quality	Bad		
	Quality substatus	Device failure		
	Status signal [from the factory] [1]	F		
	Diagnostic behavior	Alarm		

1) Status signal can be changed.

Diagnostic information			Remedy instructions	Influenced measured variables
No.	Short text			
270	Main electronic failure		Change main electronic module	▪ Empty pipe detection ▪ Low flow cut off ▪ Switch output status ▪ Pressure
	Measured variable status			
	Quality	Bad		
	Quality substatus	Device failure		
	Status signal [from the factory] [1]	F		
	Diagnostic behavior	Alarm		

1) Status signal can be changed.

Diagnostic information			Remedy instructions	Influenced measured variables
No.	Short text			
271	Main electronic failure		1. Restart device 2. Change main electronic module	▪ Empty pipe detection ▪ Low flow cut off ▪ Switch output status ▪ Pressure
	Measured variable status			
	Quality	Bad		
	Quality substatus	Device failure		
	Status signal [from the factory] [1]	F		
	Diagnostic behavior	Alarm		

1) Status signal can be changed.

Diagnostic information			Remedy instructions	Influenced measured variables
No.	Short text			
272	Main electronic failure		1. Restart device 2. Contact service	▪ Empty pipe detection ▪ Low flow cut off ▪ Switch output status ▪ Pressure
	Measured variable status			
	Quality	Bad		
	Quality substatus	Device failure		
	Status signal [from the factory] [1]	F		
	Diagnostic behavior	Alarm		

1) Status signal can be changed.

Diagnostic information			Remedy instructions	Influenced measured variables
No.	Short text			
273	Main electronic failure		Change electronic	▪ Empty pipe detection ▪ Low flow cut off ▪ Switch output status ▪ Pressure
	Measured variable status			
	Quality	Bad		
	Quality substatus	Device failure		
	Status signal [from the factory] [1]	F		
	Diagnostic behavior	Alarm		

1) Status signal can be changed.

Diagnostic information			Remedy instructions	Influenced measured variables
No.	Short text			
275	I/O module 1 to n defective		Change I/O module	▪ Empty pipe detection ▪ Low flow cut off ▪ Switch output status ▪ Pressure
	Measured variable status			
	Quality	Bad		
	Quality substatus	Device failure		
	Status signal [from the factory] [1]	F		
	Diagnostic behavior	Alarm		

1) Status signal can be changed.

Diagnostic information			Remedy instructions	Influenced measured variables
No.	Short text			
276	I/O module 1 to n faulty		1. Restart device 2. Change I/O module	▪ Empty pipe detection ▪ Low flow cut off ▪ Switch output status ▪ Pressure
	Measured variable status			
	Quality	Uncertain		
	Quality substatus	Non specific		
	Status signal [from the factory] [1]	F		
	Diagnostic behavior	Alarm		

1) Status signal can be changed.

Diagnostic information			Remedy instructions	Influenced measured variables
No.	Short text			
276	I/O module 1 to n faulty		1. Restart device 2. Change I/O module	▪ Empty pipe detection ▪ Low flow cut off ▪ Switch output status ▪ Pressure
	Measured variable status			
	Quality	Bad		
	Quality substatus	Device failure		
	Status signal [from the factory] [1]	F		
	Diagnostic behavior	Alarm		

1) Status signal can be changed.

Diagnostic information			Remedy instructions	Influenced measured variables
No.	Short text			
283	Memory content		1. Reset device 2. Contact service	▪ Empty pipe detection ▪ Low flow cut off ▪ Switch output status ▪ Pressure
	Measured variable status			
	Quality	Bad		
	Quality substatus	Device failure		
	Status signal [from the factory] [1]	F		
	Diagnostic behavior	Alarm		

1) Status signal can be changed.

Diagnostic information			Remedy instructions	Influenced measured variables
No.	Short text			
302	Device verification active		Device verification active, please wait.	▪ Empty pipe detection ▪ Low flow cut off ▪ Switch output status ▪ Pressure
	Measured variable status			
	Quality	Bad		
	Quality substatus	Device failure		
	Status signal [from the factory] [1]	C		
	Diagnostic behavior	Warning		

1) Status signal can be changed.

Diagnostic information			Remedy instructions	Influenced measured variables
No.	Short text			
311	Electronic failure		1. Do not reset device 2. Contact service	▪ Empty pipe detection ▪ Low flow cut off ▪ Switch output status ▪ Pressure
	Measured variable status			
	Quality	Bad		
	Quality substatus	Device failure		
	Status signal [from the factory] [1]	M		
	Diagnostic behavior	Warning		

1) Status signal can be changed.

Diagnostic information			Remedy instructions	Influenced measured variables
No.	Short text			
332	Writing in embedded HistoROM failed		Replace user interface board Ex d/XP: replace transmitter	▪ Empty pipe detection ▪ Low flow cut off ▪ Switch output status ▪ Pressure
	Measured variable status			
	Quality	Bad		
	Quality substatus	Device failure		
	Status signal [from the factory] 1)	F		
	Diagnostic behavior	Alarm		

1) Status signal can be changed.

Diagnostic information			Remedy instructions	Influenced measured variables
No.	Short text			
361	I/O module 1 to n faulty		1. Restart device 2. Check electronic modules 3. Change I/O Modul or main electronics	▪ Empty pipe detection ▪ Low flow cut off ▪ Switch output status ▪ Pressure
	Measured variable status			
	Quality	Bad		
	Quality substatus	Device failure		
	Status signal [from the factory] 1)	F		
	Diagnostic behavior	Alarm		

1) Status signal can be changed.

Diagnostic information			Remedy instructions	Influenced measured variables
No.	Short text			
372	Sensor electronic (ISEM) faulty		1. Restart device 2. Check if failure recurs 3. Replace sensor electronic module (ISEM)	▪ Empty pipe detection ▪ Low flow cut off ▪ Switch output status ▪ Pressure
	Measured variable status			
	Quality	Bad		
	Quality substatus	Device failure		
	Status signal [from the factory] 1)	F		
	Diagnostic behavior	Alarm		

1) Status signal can be changed.

Diagnostic information			Remedy instructions	Influenced measured variables
No.	Short text			
373	Sensor electronic (ISEM) faulty		1. Transfer data or reset device 2. Contact service	▪ Empty pipe detection ▪ Low flow cut off ▪ Switch output status ▪ Pressure
	Measured variable status			
	Quality	Bad		
	Quality substatus	Device failure		
	Status signal [from the factory] 1)	F		
	Diagnostic behavior	Alarm		

1) Status signal can be changed.

Diagnostic information			Remedy instructions	Influenced measured variables
No.	Short text			
374	Sensor electronic (ISEM) faulty		1. Restart device 2. Check if failure recurs 3. Replace sensor electronic module (ISEM)	▪ Empty pipe detection ▪ Low flow cut off ▪ Switch output status ▪ Pressure
	Measured variable status [from the factory] 1)			
	Quality	Good		
	Quality substatus	Non specific		
	Status signal [from the factory] 2)	S		
	Diagnostic behavior [from the factory] 3)	Warning		

1) Quality can be changed. This causes the overall status of the measured variable to change.
2) Status signal can be changed.
3) Diagnostic behavior can be changed.

Diagnostic information			Remedy instructions	Influenced measured variables
No.	Short text			
375	I/O- 1 to n communication failed		1. Restart device 2. Check if failure recurs 3. Replace module rack inclusive electronic modules	▪ Empty pipe detection ▪ Low flow cut off ▪ Switch output status ▪ Pressure
	Measured variable status			
	Quality	Bad		
	Quality substatus	Device failure		
	Status signal [from the factory] 1)	F		
	Diagnostic behavior	Alarm		

1) Status signal can be changed.

Diagnostic information			Remedy instructions	Influenced measured variables
No.	Short text			
382	Data storage		1. Insert T-DAT 2. Replace T-DAT	▪ Empty pipe detection ▪ Low flow cut off ▪ Pressure
	Measured variable status			
	Quality	Bad		
	Quality substatus	Device failure		
	Status signal [from the factory] 1)	F		
	Diagnostic behavior	Alarm		

1) Status signal can be changed.

Diagnostic information			Remedy instructions	Influenced measured variables
No.	Short text			
383	Memory content		1. Restart device 2. Delete T-DAT via 'Reset device' parameter 3. Replace T-DAT	▪ Empty pipe detection ▪ Low flow cut off ▪ Switch output status ▪ Pressure
	Measured variable status			
	Quality	Bad		
	Quality substatus	Device failure		
	Status signal [from the factory] 1)	F		
	Diagnostic behavior	Alarm		

1) Status signal can be changed.

Diagnostic information			Remedy instructions	Influenced measured variables
No.	Short text			
387	Embedded HistoROM failed		Contact service organization	▪ Empty pipe detection ▪ Low flow cut off ▪ Switch output status ▪ Pressure
	Measured variable status			
	Quality	Bad		
	Quality substatus	Device failure		
	Status signal [from the factory] [1]	F		
	Diagnostic behavior	Alarm		

1) Status signal can be changed.

12.7.3 Diagnostic of configuration

Diagnostic information			Remedy instructions	Influenced measured variables
No.	Short text			
303	I/O 1 to n configuration changed		1. Apply I/O module configuration (parameter 'Apply I/O configuration') 2. Afterwards reload device description and check wiring	–
	Measured variable status			
	Quality	Good		
	Quality substatus	Non specific		
	Status signal [from the factory] [1]	M		
	Diagnostic behavior	Warning		

1) Status signal can be changed.

Diagnostic information			Remedy instructions	Influenced measured variables
No.	Short text			
330	Flash file invalid		1. Update firmware of device 2. Restart device	▪ Empty pipe detection ▪ Low flow cut off ▪ Switch output status ▪ Pressure
	Measured variable status			
	Quality	Bad		
	Quality substatus	Configuration error		
	Status signal [from the factory] [1]	M		
	Diagnostic behavior	Warning		

1) Status signal can be changed.

Diagnostic information			Remedy instructions	Influenced measured variables
No.	Short text			
331	Firmware update failed		1. Update firmware of device 2. Restart device	▪ Empty pipe detection ▪ Low flow cut off ▪ Switch output status ▪ Pressure
	Measured variable status			
	Quality	Bad		
	Quality substatus	Configuration error		
	Status signal [from the factory] [1]	F		
	Diagnostic behavior	Warning		

1) Status signal can be changed.

Diagnostic information			Remedy instructions	Influenced measured variables
No.	Short text			
410	Data transfer		1. Check connection 2. Retry data transfer	▪ Empty pipe detection ▪ Low flow cut off ▪ Switch output status ▪ Pressure
	Measured variable status			
	Quality	Bad		
	Quality substatus	Configuration error		
	Status signal [from the factory] [1]	F		
	Diagnostic behavior	Alarm		

1) Status signal can be changed.

Diagnostic information			Remedy instructions	Influenced measured variables
No.	Short text			
412	Processing download		Download active, please wait	▪ Empty pipe detection ▪ Low flow cut off ▪ Switch output status ▪ Pressure
	Measured variable status			
	Quality	Uncertain		
	Quality substatus	Non specific		
	Status signal [from the factory] [1]	C		
	Diagnostic behavior	Warning		

1) Status signal can be changed.

Diagnostic information			Remedy instructions	Influenced measured variables
No.	Short text			
431	Trim 1 to n		Carry out trim	–
	Measured variable status			
	Quality	Good		
	Quality substatus	Non specific		
	Status signal [from the factory] [1]	C		
	Diagnostic behavior	Warning		

1) Status signal can be changed.

Diagnostic information			Remedy instructions	Influenced measured variables
No.	Short text			
437	Configuration incompatible		1. Restart device 2. Contact service	▪ Empty pipe detection ▪ Low flow cut off ▪ Switch output status ▪ Pressure
	Measured variable status			
	Quality	Bad		
	Quality substatus	Configuration error		
	Status signal [from the factory] [1]	F		
	Diagnostic behavior	Alarm		

1) Status signal can be changed.

Diagnostic information			Remedy instructions	Influenced measured variables
No.	Short text			
438	Dataset		1. Check data set file 2. Check device configuration 3. Up- and download new configuration	▪ Empty pipe detection ▪ Low flow cut off ▪ Switch output status ▪ Pressure
	Measured variable status			
	Quality	Uncertain		
	Quality substatus	Non specific		
	Status signal [from the factory] [1]	M		
	Diagnostic behavior	Warning		

1) Status signal can be changed.

Diagnostic information			Remedy instructions	Influenced measured variables
No.	Short text			
441	Current output 1 to n		1. Check process 2. Check current output settings	–
	Measured variable status			
	Quality	Good		
	Quality substatus	Non specific		
	Status signal [from the factory] [1]	S		
	Diagnostic behavior [from the factory] [2]	Warning		

1) Status signal can be changed.
2) Diagnostic behavior can be changed.

Diagnostic information			Remedy instructions	Influenced measured variables
No.	Short text			
442	Frequency output 1 to n		1. Check process 2. Check frequency output settings	–
	Measured variable status			
	Quality	Good		
	Quality substatus	Non specific		
	Status signal [from the factory] [1]	S		
	Diagnostic behavior [from the factory] [2]	Warning		

1) Status signal can be changed.
2) Diagnostic behavior can be changed.

Diagnostic information			Remedy instructions	Influenced measured variables
No.	Short text			
443	Pulse output 1 to n		1. Check process 2. Check pulse output settings	–
	Measured variable status			
	Quality	Good		
	Quality substatus	Non specific		
	Status signal [from the factory] [1]	S		
	Diagnostic behavior [from the factory] [2]	Warning		

1) Status signal can be changed.
2) Diagnostic behavior can be changed.

Diagnostic information			Remedy instructions	Influenced measured variables
No.	Short text			
444	Current input 1 to n		1. Check process 2. Check current input settings	–
	Measured variable status			
	Quality	Good		
	Quality substatus	Non specific		
	Status signal [from the factory] [1]	S		
	Diagnostic behavior [from the factory] [2]	Warning		

1) Status signal can be changed.
2) Diagnostic behavior can be changed.

Diagnostic information			Remedy instructions	Influenced measured variables
No.	Short text			
453	Flow override		Deactivate flow override	▪ Empty pipe detection ▪ Low flow cut off ▪ Switch output status ▪ Pressure
	Measured variable status			
	Quality	Good		
	Quality substatus	Non specific		
	Status signal [from the factory] [1]	C		
	Diagnostic behavior	Warning		

1) Status signal can be changed.

Diagnostic information			Remedy instructions	Influenced measured variables
No.	Short text			
463	Analog input 1 to n selection invalid		1. Check module/channel configuration 2. Check I/O module configuration	▪ Empty pipe detection ▪ Low flow cut off ▪ Switch output status ▪ Pressure
	Measured variable status			
	Quality	Bad		
	Quality substatus	Configuration error		
	Status signal [from the factory] [1]	F		
	Diagnostic behavior	Alarm		

1) Status signal can be changed.

Diagnostic information			Remedy instructions	Influenced measured variables
No.	Short text			
484	Failure mode simulation		Deactivate simulation	▪ Empty pipe detection ▪ Low flow cut off ▪ Switch output status ▪ Pressure
	Measured variable status			
	Quality	Bad		
	Quality substatus	Configuration error		
	Status signal [from the factory] [1]	C		
	Diagnostic behavior	Alarm		

1) Status signal can be changed.

Diagnostic information			Remedy instructions	Influenced measured variables
No.	Short text			
485	Measured variable simulation		Deactivate simulation	▪ Empty pipe detection ▪ Low flow cut off ▪ Switch output status ▪ Pressure
	Measured variable status			
	Quality	Good		
	Quality substatus	Non specific		
	Status signal [from the factory] [1]	C		
	Diagnostic behavior	Warning		

1) Status signal can be changed.

Diagnostic information			Remedy instructions	Influenced measured variables
No.	Short text			
486	Current input 1 to n simulation		Deactivate simulation	–
	Measured variable status			
	Quality	Good		
	Quality substatus	Non specific		
	Status signal [from the factory] [1]	C		
	Diagnostic behavior	Warning		

1) Status signal can be changed.

Diagnostic information			Remedy instructions	Influenced measured variables
No.	Short text			
491	Current output 1 to n simulation		Deactivate simulation	–
	Measured variable status			
	Quality	Good		
	Quality substatus	Non specific		
	Status signal [from the factory] [1]	C		
	Diagnostic behavior	Warning		

1) Status signal can be changed.

Diagnostic information			Remedy instructions	Influenced measured variables
No.	Short text			
492	Simulation frequency output 1 to n		Deactivate simulation frequency output	–
	Measured variable status			
	Quality	Good		
	Quality substatus	Non specific		
	Status signal [from the factory] [1]	C		
	Diagnostic behavior	Warning		

1) Status signal can be changed.

Diagnostic information			Remedy instructions	Influenced measured variables
No.	Short text			
493	Simulation pulse output 1 to n		Deactivate simulation pulse output	–
	Measured variable status			
	Quality	Good		
	Quality substatus	Non specific		
	Status signal [from the factory] [1]	C		
	Diagnostic behavior	Warning		

1) Status signal can be changed.

Diagnostic information			Remedy instructions	Influenced measured variables
No.	Short text			
494	Switch output simulation 1 to n		Deactivate simulation switch output	–
	Measured variable status			
	Quality	Good		
	Quality substatus	Non specific		
	Status signal [from the factory] [1]	C		
	Diagnostic behavior	Warning		

1) Status signal can be changed.

Diagnostic information			Remedy instructions	Influenced measured variables
No.	Short text			
495	Diagnostic event simulation		Deactivate simulation	–
	Measured variable status			
	Quality	Good		
	Quality substatus	Non specific		
	Status signal [from the factory] [1]	C		
	Diagnostic behavior	Warning		

1) Status signal can be changed.

Diagnostic information			Remedy instructions	Influenced measured variables
No.	Short text			
496	Status input simulation		Deactivate simulation status input	–
	Measured variable status			
	Quality	Good		
	Quality substatus	Non specific		
	Status signal [from the factory] [1]	C		
	Diagnostic behavior	Warning		

1) Status signal can be changed.

Diagnostic information			Remedy instructions	Influenced measured variables
No.	Short text			
497	Simulation block output		Deactivate simulation	–
	Measured variable status			
	Quality	Good		
	Quality substatus	Non specific		
	Status signal [from the factory] [1]	C		
	Diagnostic behavior	Warning		

1) Status signal can be changed.

Diagnostic information			Remedy instructions	Influenced measured variables
No.	Short text			
520	I/O 1 to n hardware configuration invalid		1. Check I/O hardware configuration 2. Replace wrong I/O module 3. Plug the module of double pulse output on correct slot	–
	Measured variable status			
	Quality	Good		
	Quality substatus	Non specific		
	Status signal [from the factory] [1]	F		
	Diagnostic behavior	Alarm		

1) Status signal can be changed.

Diagnostic information			Remedy instructions	Influenced measured variables
No.	**Short text**			
537	Configuration		1. Check IP addresses in network 2. Change IP address	–
	Measured variable status			
	Quality	Good		
	Quality substatus	Non specific		
	Status signal [from the factory] [1]	F		
	Diagnostic behavior	Warning		

1) Status signal can be changed.

Diagnostic information			Remedy instructions	Influenced measured variables
No.	**Short text**			
594	Relay output simulation		Deactivate simulation switch output	–
	Measured variable status			
	Quality	Good		
	Quality substatus	Non specific		
	Status signal [from the factory] [1]	C		
	Diagnostic behavior	Warning		

1) Status signal can be changed.

12.7.4 Diagnostic of process

Diagnostic information			Remedy instructions	Influenced measured variables
No.	**Short text**			
803	Current loop 1 to n		1. Check wiring 2. Change I/O module	–
	Measured variable status			
	Quality	Good		
	Quality substatus	Non specific		
	Status signal [from the factory] [1]	F		
	Diagnostic behavior	Alarm		

1) Status signal can be changed.

Diagnostic information			Remedy instructions	Influenced measured variables
No.	**Short text**			
830	Sensor temperature too high		Reduce ambient temp. around the sensor housing	▪ Empty pipe detection ▪ Low flow cut off ▪ Switch output status ▪ Pressure
	Measured variable status [from the factory] 1)			
	Quality	Good		
	Quality substatus	Non specific		
	Status signal [from the factory] 2)	S		
	Diagnostic behavior [from the factory] 3)	Warning		

1) Quality can be changed. This causes the overall status of the measured variable to change.
2) Status signal can be changed.
3) Diagnostic behavior can be changed.

Diagnostic information			Remedy instructions	Influenced measured variables
No.	**Short text**			
831	Sensor temperature too low		Increase ambient temp. around the sensor housing	▪ Empty pipe detection ▪ Low flow cut off ▪ Switch output status ▪ Pressure
	Measured variable status [from the factory] 1)			
	Quality	Good		
	Quality substatus	Non specific		
	Status signal [from the factory] 2)	S		
	Diagnostic behavior [from the factory] 3)	Warning		

1) Quality can be changed. This causes the overall status of the measured variable to change.
2) Status signal can be changed.
3) Diagnostic behavior can be changed.

Diagnostic information			Remedy instructions	Influenced measured variables
No.	**Short text**			
832	Electronic temperature too high		Reduce ambient temperature	▪ Empty pipe detection ▪ Low flow cut off ▪ Switch output status ▪ Pressure
	Measured variable status [from the factory] 1)			
	Quality	Good		
	Quality substatus	Non specific		
	Status signal [from the factory] 2)	S		
	Diagnostic behavior [from the factory] 3)	Warning		

1) Quality can be changed. This causes the overall status of the measured variable to change.
2) Status signal can be changed.
3) Diagnostic behavior can be changed.

Diagnostic information			Remedy instructions	Influenced measured variables
No.	Short text			
833	Electronic temperature too low		Increase ambient temperature	▪ Empty pipe detection ▪ Low flow cut off ▪ Switch output status ▪ Pressure
	Measured variable status [from the factory] 1)			
	Quality	Good		
	Quality substatus	Non specific		
	Status signal [from the factory] 2)	S		
	Diagnostic behavior [from the factory] 3)	Warning		

1) Quality can be changed. This causes the overall status of the measured variable to change.
2) Status signal can be changed.
3) Diagnostic behavior can be changed.

Diagnostic information			Remedy instructions	Influenced measured variables
No.	Short text			
834	Process temperature too high		Reduce process temperature	▪ Empty pipe detection ▪ Low flow cut off ▪ Switch output status ▪ Pressure
	Measured variable status [from the factory] 1)			
	Quality	Good		
	Quality substatus	Non specific		
	Status signal [from the factory] 2)	S		
	Diagnostic behavior [from the factory] 3)	Warning		

1) Quality can be changed. This causes the overall status of the measured variable to change.
2) Status signal can be changed.
3) Diagnostic behavior can be changed.

Diagnostic information			Remedy instructions	Influenced measured variables
No.	Short text			
835	Process temperature too low		Increase process temperature	▪ Empty pipe detection ▪ Low flow cut off ▪ Switch output status ▪ Pressure
	Measured variable status [from the factory] 1)			
	Quality	Good		
	Quality substatus	Non specific		
	Status signal [from the factory] 2)	S		
	Diagnostic behavior [from the factory] 3)	Warning		

1) Quality can be changed. This causes the overall status of the measured variable to change.
2) Status signal can be changed.
3) Diagnostic behavior can be changed.

Diagnostic information			Remedy instructions	Influenced measured variables
No.	Short text			
842	Process limit		Low flow cut off active! 1. Check low flow cut off configuration	▪ Empty pipe detection ▪ Low flow cut off ▪ Switch output status ▪ Pressure
	Measured variable status			
	Quality	Good		
	Quality substatus	Non specific		
	Status signal [from the factory] [1]	S		
	Diagnostic behavior	Warning		

1) Status signal can be changed.

Diagnostic information			Remedy instructions	Influenced measured variables
No.	Short text			
843	Process limit		Check process conditions	▪ Empty pipe detection ▪ Low flow cut off ▪ Switch output status ▪ Pressure
	Measured variable status			
	Quality	Good		
	Quality substatus	Non specific		
	Status signal [from the factory] [1]	S		
	Diagnostic behavior	Alarm		

1) Status signal can be changed.

Diagnostic information			Remedy instructions	Influenced measured variables
No.	Short text			
862	Partly filled pipe		1. Check for gas in process 2. Adjust detection limits	–
	Measured variable status [from the factory] [1]			
	Quality	Good		
	Quality substatus	Non specific		
	Status signal [from the factory] [2]	S		
	Diagnostic behavior [from the factory] [3]	Warning		

1) Quality can be changed. This causes the overall status of the measured variable to change.
2) Status signal can be changed.
3) Diagnostic behavior can be changed.

Diagnostic information			Remedy instructions	Influenced measured variables
No.	Short text			
882	Input signal		1. Check input configuration 2. Check external device or process conditions	–
	Measured variable status			
	Quality	Bad		
	Quality substatus	Non specific		
	Status signal [from the factory] [1]	F		
	Diagnostic behavior	Alarm		

1) Status signal can be changed.

Diagnostic information			Remedy instructions	Influenced measured variables
No.	Short text			
910	Tubes not oscillating		1. Check electronic 2. Inspect sensor	▪ Empty pipe detection ▪ Low flow cut off ▪ Switch output status ▪ Pressure
	Measured variable status			
	Quality	Bad		
	Quality substatus	Non specific		
	Status signal [from the factory] [1]	F		
	Diagnostic behavior	Alarm		

1) Status signal can be changed.

Diagnostic information			Remedy instructions	Influenced measured variables
No.	Short text			
912	Medium inhomogeneous		1. Check process cond. 2. Increase system pressure	▪ Empty pipe detection ▪ Low flow cut off ▪ Switch output status ▪ Pressure
	Measured variable status [from the factory] [1]			
	Quality	Good		
	Quality substatus	Non specific		
	Status signal [from the factory] [2]	S		
	Diagnostic behavior [from the factory] [3]	Warning		

1) Quality can be changed. This causes the overall status of the measured variable to change.
2) Status signal can be changed.
3) Diagnostic behavior can be changed.

Diagnostic information			Remedy instructions	Influenced measured variables
No.	Short text			
913	Medium unsuitable		1. Check process conditions 2. Check electronic modules or sensor	▪ Empty pipe detection ▪ Low flow cut off ▪ Switch output status ▪ Pressure
	Measured variable status [from the factory] [1]			
	Quality	Good		
	Quality substatus	Non specific		
	Status signal [from the factory] [2]	S		
	Diagnostic behavior [from the factory] [3]	Warning		

1) Quality can be changed. This causes the overall status of the measured variable to change.
2) Status signal can be changed.
3) Diagnostic behavior can be changed.

Diagnostic information			Remedy instructions	Influenced measured variables
No.	Short text			
944	Monitoring failed		Check process conditions for Heartbeat Monitoring	▪ Empty pipe detection ▪ Low flow cut off ▪ Switch output status ▪ Pressure
	Measured variable status [from the factory] 1)			
	Quality	Good		
	Quality substatus	Non specific		
	Status signal [from the factory] 2)	S		
	Diagnostic behavior [from the factory] 3)	Warning		

1) Quality can be changed. This causes the overall status of the measured variable to change.
2) Status signal can be changed.
3) Diagnostic behavior can be changed.

Diagnostic information			Remedy instructions	Influenced measured variables
No.	Short text			
948	Oscillation damping too high		Check process conditions	▪ Empty pipe detection ▪ Low flow cut off ▪ Switch output status ▪ Pressure
	Measured variable status [from the factory] 1)			
	Quality	Good		
	Quality substatus	Non specific		
	Status signal [from the factory] 2)	S		
	Diagnostic behavior [from the factory] 3)	Warning		

1) Quality can be changed. This causes the overall status of the measured variable to change.
2) Status signal can be changed.
3) Diagnostic behavior can be changed.

12.8 Pending diagnostic events

The **Diagnostics** menu allows the user to view the current diagnostic event and the previous diagnostic event separately.

To call up the measures to rectify a diagnostic event:
- Via local display → 📄 158
- Via Web browser → 📄 159
- Via "FieldCare" operating tool → 📄 160
- Via "DeviceCare" operating tool → 📄 160

Other pending diagnostic events can be displayed in the **Diagnostic list** submenu → 📄 187

Navigation
"Diagnostics" menu

Diagnostics	
Actual diagnostics	→ 📄 187
Previous diagnostics	→ 📄 187

Operating time from restart	→ 📄 187
Operating time	→ 📄 187

Parameter overview with brief description

Parameter	Prerequisite	Description	User interface
Actual diagnostics	A diagnostic event has occurred.	Shows the current occured diagnostic event along with its diagnostic information. ℹ If two or more messages occur simultaneously, the message with the highest priority is shown on the display.	Symbol for diagnostic behavior, diagnostic code and short message.
Previous diagnostics	Two diagnostic events have already occurred.	Shows the diagnostic event that occurred prior to the current diagnostic event along with its diagnostic information.	Symbol for diagnostic behavior, diagnostic code and short message.
Operating time from restart	–	Shows the time the device has been in operation since the last device restart.	Days (d), hours (h), minutes (m) and seconds (s)
Operating time	–	Indicates how long the device has been in operation.	Days (d), hours (h), minutes (m) and seconds (s)

12.9 Diagnostic messages in the DIAGNOSTIC Transducer Block

- The **Actual diagnostics** parameter **(actual diagnostics)** displays the message with the highest priority.
- A list of the active alarms can be viewed via the **Diagnostics 1** parameter **(diagnostics_1)** to Diagnostics 5 **(diagnostics 5)**. If more than 5 messages are pending, the messages with the highest priority are shown on the display.
- You can view the last alarm that is no longer active via the **Previous diagnostics** parameter **(previous_diagnostics)**.

12.10 Diagnostic list

Up to 5 currently pending diagnostic events can be displayed in the **Diagnostic list** submenu along with the associated diagnostic information. If more than 5 diagnostic events are pending, the events with the highest priority are shown on the display.

Navigation path
Diagnostics → Diagnostic list

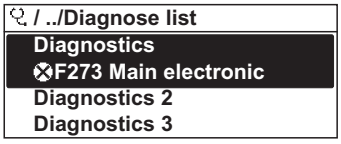

A0014006-EN

36 *Taking the example of the local display*

To call up the measures to rectify a diagnostic event:
- Via local display → 158
- Via Web browser → 159
- Via "FieldCare" operating tool → 160
- Via "DeviceCare" operating tool → 160

12.11 Event logbook

12.11.1 Event history

A chronological overview of the event messages that have occurred is provided in the **Events list** submenu.

Navigation path
Diagnostics menu → **Event logbook** submenu → Event list

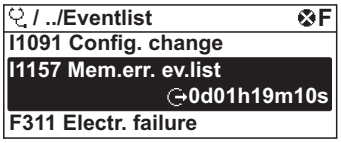

A0014008-EN

37 *Taking the example of the local display*

- Max. 20 event messages can be displayed in chronological order.
- If the **Extended HistoROM** application package (order option) is enabled in the device, the event list can contain up to 100 entries .

The event history includes entries for:
- Diagnostic events → 165
- Information events → 189

In addition to the operation time of its occurrence, each event is also assigned a symbol that indicates whether the event has occurred or is ended:
- Diagnostic event
  - ⊖: Occurrence of the event
  - ⊕: End of the event
- Information event
  ⊖: Occurrence of the event

To call up the measures to rectify a diagnostic event:
- Via local display → 158
- Via Web browser → 159
- Via "FieldCare" operating tool → 160
- Via "DeviceCare" operating tool → 160

For filtering the displayed event messages → 189

12.11.2 Filtering the event logbook

Using the **Filter options** parameter you can define which category of event message is displayed in the **Events list** submenu.

Navigation path
Diagnostics → Event logbook → Filter options

Filter categories
- All
- Failure (F)
- Function check (C)
- Out of specification (S)
- Maintenance required (M)
- Information (I)

12.11.3 Overview of information events

Unlike a diagnostic event, an information event is displayed in the event logbook only and not in the diagnostic list.

Info number	Info name
I1000	--------(Device ok)
I1079	Sensor changed
I1089	Power on
I1090	Configuration reset
I1091	Configuration changed
I1092	Embedded HistoROM deleted
I1111	Density adjust failure
I1137	Electronic changed
I1151	History reset
I1155	Reset electronic temperature
I1156	Memory error trend
I1157	Memory error event list
I1184	Display connected
I1209	Density adjustment ok
I1221	Zero point adjust failure
I1222	Zero point adjustment ok
I1256	Display: access status changed
I1278	I/O module reset detected
I1335	Firmware changed
I1361	Web server login failed
I1397	Fieldbus: access status changed
I1398	CDI: access status changed
I1444	Device verification passed
I1445	Device verification failed
I1447	Record application reference data
I1448	Application reference data recorded
I1449	Recording application ref. data failed
I1450	Monitoring off

Info number	Info name
I1451	Monitoring on
I1457	Measured error verification failed
I1459	I/O module verification failed
I1460	HBSI verification failed
I1461	Sensor verification failed
I1462	Sensor electronic module verific. failed
I1512	Download started
I1513	Download finished
I1514	Upload started
I1515	Upload finished
I1618	I/O module replaced
I1619	I/O module replaced
I1621	I/O module replaced
I1622	Calibration changed
I1624	Reset all totalizers
I1625	Write protection activated
I1626	Write protection deactivated
I1627	Web server login successful
I1628	Display login successful
I1629	CDI login successful
I1631	Web server access changed
I1632	Display login failed
I1633	CDI login failed
I1634	Parameter factory reset
I1635	Parameter delivery reset
I1637	FOUNDATION Fieldbus specific reset done
I1639	Max. switch cycles number reached
I1649	Hardware write protection activated
I1650	Hardware write protection deactivated
I1712	New flash file received
I1725	Sensor electronic module (ISEM) changed
I1726	Configuration backup failed

12.12 Resetting the measuring device

Using the**Restart** parameter it is possible to reset the entire device configuration or some of the configuration to a defined state.

12.12.1 Function scope of the "Restart" parameter

Options	Description
Uninitialized	The selection has no effect on the device.
Run	The selection has no effect on the device.
Resource	The selection has no effect on the device.

Options	Description
Defaults	All FOUNDATION Fieldbus blocks are reset to their factory settings. Example: Analog Input Channel to the **Uninitialized** option.
Processor	The device is restarted.
To delivery settings	Advanced FOUNDATION Fieldbus parameters (FOUNDATION Fieldbus blocks, schedule information) and device parameters for which a customer-specific default setting was ordered are reset to this customer-specific value.

12.13 Device information

The **Device information** submenu contains all parameters that display different information for device identification.

Navigation

"Diagnostics" menu → Device information

▶ **Device information**

Device tag	→ 191
Serial number	→ 191
Device name	→ 191
Firmware version	→ 191
Order code	→ 192
Extended order code 1	→ 192
Extended order code 2	→ 192
ENP version	→ 192

Parameter overview with brief description

Parameter	Description	User entry / User interface	Factory setting
Device tag	Enter the name for the measuring point.	32 characters such as letters, numbers or special characters (e.g. @, %, /)	Promass300/500
Serial number	Displays the serial number of the measuring device.	Max. 11-digit character string comprising letters and numbers.	–
Device name	Shows the name of the transmitter. The name can be found on the nameplate of the transmitter.	Promass300/500	–
Firmware version	Shows the device firmware version installed.	Character string with the following format: xx.yy.zz	–

Parameter	Description	User entry / User interface	Factory setting
Order code	Shows the device order code. The order code can be found on the nameplate of the sensor and transmitter in the "Order code" field.	Character string composed of letters, numbers and certain punctuation marks	–
Extended order code 1	Shows the 1st part of the extended order code. The extended order code can also be found on the nameplate of the sensor and transmitter in the "Ext. ord. cd." field.	Character string	–
Extended order code 2	Shows the 2nd part of the extended order code. The extended order code can also be found on the nameplate of the sensor and transmitter in the "Ext. ord. cd." field.	Character string	–
ENP version	Shows the version of the electronic nameplate (ENP).	Character string in the format xx.yy.zz	–

12.14 Firmware history

Release date	Firmware version	Order code for "Firmware version"	Firmware Modifications	Documentation type	Documentation
02.2017	01.00.zz	Option **74**	Original firmware	Operating Instructions	BA01563D/06/EN/01.16

It is possible to flash the firmware to the current version or the previous version using the service interface.

For the compatibility of the firmware version with the previous version, the installed device description files and operating tools, observe the information about the device in the "Manufacturer's information" document.

The manufacturer's information is available:
- In the Download Area of the Endress+Hauser web site: www.endress.com → Downloads
- Specify the following details:
  - Product root, e.g. 8E5B
  - Text search: Manufacturer's information
  - Media type: Documentation – Technical Documentation

13 Maintenance

13.1 Maintenance tasks

No special maintenance work is required.

13.1.1 Exterior cleaning

When cleaning the exterior of measuring devices, always use cleaning agents that do not attack the surface of the housing or the seals.

13.2 Measuring and test equipment

Endress+Hauser offers a wide variety of measuring and test equipment, such as W@M or device tests.

Your Endress+Hauser Sales Center can provide detailed information on the services.

List of some of the measuring and testing equipment: → 196

13.3 Endress+Hauser services

Endress+Hauser offers a wide variety of services for maintenance such as recalibration, maintenance service or device tests.

Your Endress+Hauser Sales Center can provide detailed information on the services.

14 Repairs

14.1 General notes

14.1.1 Repair and conversion concept

The Endress+Hauser repair and conversion concept provides for the following:
- The measuring devices have a modular design.
- Spare parts are grouped into logical kits with the associated Installation Instructions.
- Repairs are carried out by Endress+Hauser Service or by appropriately trained customers.
- Certified devices can only be converted to other certified devices by Endress+Hauser Service or at the factory.

14.1.2 Notes for repair and conversion

For repair and modification of a measuring device, observe the following notes:
- ▶ Use only original Endress+Hauser spare parts.
- ▶ Carry out the repair according to the Installation Instructions.
- ▶ Observe the applicable standards, federal/national regulations, Ex documentation (XA) and certificates.
- ▶ Document every repair and each conversion and enter them into the *W@M* life cycle management database.

14.2 Spare parts

W@M Device Viewer (www.endress.com/deviceviewer):
All the spare parts for the measuring device, along with the order code, are listed here and can be ordered. If available, users can also download the associated Installation Instructions.

Measuring device serial number:
- Is located on the nameplate of the device.
- Can be read out via the **Serial number** parameter in the **Device information** submenu.

14.3 Endress+Hauser services

Endress+Hauser offers a wide range of services.

Your Endress+Hauser Sales Center can provide detailed information on the services.

14.4 Return

The measuring device must be returned if it is need of repair or a factory calibration, or if the wrong measuring device has been delivered or ordered. Legal specifications require Endress+Hauser, as an ISO-certified company, to follow certain procedures when handling products that are in contact with the medium.

To ensure safe, swift and professional device returns, please refer to the procedure and conditions for returning devices provided on the Endress+Hauser website at http://www.endress.com/support/return-material

14.5 Disposal

14.5.1 Removing the measuring device

1. Switch off the device.

⚠ WARNING

Danger to persons from process conditions.

- Beware of hazardous process conditions such as pressure in the measuring device, high temperatures or aggressive fluids.

2. Carry out the mounting and connection steps from the "Mounting the measuring device" and "Connecting the measuring device" sections in reverse order. Observe the safety instructions.

14.5.2 Disposing of the measuring device

⚠ WARNING

Danger to personnel and environment from fluids that are hazardous to health.

- Ensure that the measuring device and all cavities are free of fluid residues that are hazardous to health or the environment, e.g. substances that have permeated into crevices or diffused through plastic.

Observe the following notes during disposal:

- Observe valid federal/national regulations.
- Ensure proper separation and reuse of the device components.

15 Accessories

Various accessories, which can be ordered with the device or subsequently from Endress +Hauser, are available for the device. Detailed information on the order code in question is available from your local Endress+Hauser sales center or on the product page of the Endress+Hauser website: www.endress.com.

15.1 Device-specific accessories

15.1.1 For the transmitter

Accessories	Description
Transmitter ▪ Proline 500 – digital ▪ Proline 500	Transmitter for replacement or storage. Use the order code to define the following specifications: ▪ Approvals ▪ Output ▪ Input ▪ Display / operation ▪ Housing ▪ Software ▪ Proline 500 – digital transmitter: Order number: 8X5BXX-XXXXXXXXXA ▪ Proline 500 transmitter: Order number: 8X5BXX-XXXXXXXXXB Proline 500 transmitter for replacement: When ordering, quote the serial number of the current transmitter. On the basis of the serial number, the device-specific data of the replacement device can also be used for the new transmitter. For details ▪ Proline 500 – digital transmitter: Installation Instructions EA01151 ▪ Proline 500 transmitter: Installation Instructions EA01152
WLAN antenna Wide range	External WLAN antenna for a range of up to 50 m (165 ft). Further information on the WLAN interface → 🗎 81.
Pipe mounting set	Pipe mounting set for transmitter. ▪ Proline 500 – digital transmitter Order number: 71346427 ▪ Proline 500 transmitter Order number: 71346428
Protective cover Transmitter ▪ Proline 500 – digital ▪ Proline 500	Is used to protect the measuring device from the effects of the weather: e.g. rainwater, excess heating from direct sunlight. ▪ Proline 500 – digital transmitter Order number: 71343504 ▪ Proline 500 transmitter Order number: 71343505 For details, see Installation Instructions EA01160
Display guard Proline 500 – digital	Is used to protect the measuring device from the effects of the weather: e.g. rainwater, excess heating from direct sunlight. Order number: 71228792 For details, see Installation Instructions EA01161

Connecting cable Proline 500 – digital Sensor – Transmitter	The following cable lengths are available: order code for "Cable, sensor connection" ▪ Option **B**: 20 m (65 ft) ▪ Option **E**: User configurable up to max. 50 m ▪ Option **F**: User configurable up to max. 165 ft Maximum possible cable length for a Proline 500 – digital connecting cable: 300 m (1 000 ft)
Connecting cable Proline 500 Sensor – Transmitter	The following cable lengths are available: order code for "Cable, sensor connection" ▪ Option **1**: 5 m (16 ft) ▪ Option **2**: 10 m (32 ft) ▪ Option **3**: 20 m (65 ft) Possible cable length for a Proline 500 connecting cable: max. 20 m (65 ft)

15.1.2 For the sensor

Accessories	Description
Heating jacket	Is used to stabilize the temperature of the fluids in the sensor. Water, water vapor and other non-corrosive liquids are permitted for use as fluids. If using oil as a heating medium, please consult with Endress+Hauser. For details, see Operating Instructions BA00099D

15.2 Communication-specific accessories

Accessories	Description
Field Xpert SFX350	Field Xpert SFX350 is a mobile computer for commissioning and maintenance. It enables efficient device configuration and diagnostics for HART and FOUNDATION Fieldbus devices in the **non-Ex area**. For details, see Operating Instructions BA01202S
Field Xpert SFX370	Field Xpert SFX370 is a mobile computer for commissioning and maintenance. It enables efficient device configuration and diagnostics for HART and FOUNDATION Fieldbus devices in the **non-Ex area** and the **Ex area**. For details, see Operating Instructions BA01202S

15.3 Service-specific accessories

Accessories	Description
Applicator	Software for selecting and sizing Endress+Hauser measuring devices: ▪ Choice of measuring devices for industrial requirements ▪ Calculation of all the necessary data for identifying the optimum flowmeter: e.g. nominal diameter, pressure loss, flow velocity and accuracy. ▪ Graphic illustration of the calculation results ▪ Determination of the partial order code, administration, documentation and access to all project-related data and parameters over the entire life cycle of a project. Applicator is available: ▪ Via the Internet: https://wapps.endress.com/applicator ▪ As a downloadable DVD for local PC installation.

W@M	W@M Life Cycle Management Improved productivity with information at your fingertips. Data relevant to a plant and its components is generated from the first stages of planning and during the asset's complete life cycle. W@M Life Cycle Management is an open and flexible information platform with online and on-site tools. Instant access for your staff to current, in-depth data shortens your plant's engineering time, speeds up procurement processes and increases plant uptime. Combined with the right services, W@M Life Cycle Management boosts productivity in every phase. For more information, visit www.endress.com/lifecyclemanagement
FieldCare	FDT-based plant asset management tool from Endress+Hauser. It can configure all smart field units in your system and helps you manage them. By using the status information, it is also a simple but effective way of checking their status and condition. For details, see Operating Instructions BA00027S and BA00059S
DeviceCare	Tool for connecting and configuring Endress+Hauser field devices. For details, see Innovation brochure IN01047S

15.4 System components

Accessories	Description
Memograph M graphic display recorder	The Memograph M graphic display recorder provides information on all relevant measured variables. Measured values are recorded correctly, limit values are monitored and measuring points analyzed. The data are stored in the 256 MB internal memory and also on a SD card or USB stick. For details, see "Technical Information" TI00133R and Operating Instructions BA00247R
Cerabar M	The pressure transmitter for measuring the absolute and gauge pressure of gases, steam and liquids. It can be used to read in the operating pressure value. For details, see "Technical Information" TI00426P, TI00436P and Operating Instructions BA00200P, BA00382P
Cerabar S	The pressure transmitter for measuring the absolute and gauge pressure of gases, steam and liquids. It can be used to read in the operating pressure value. For details, see "Technical Information" TI00383P and Operating Instructions BA00271P
iTEMP	The temperature transmitters can be used in all applications and are suitable for the measurement of gases, steam and liquids. They can be used to read in the fluid temperature. For details, see "Fields of Activity", FA00006T

16 Technical data

16.1 Application

The measuring device is suitable for flow measurement of liquids and gases only.

Depending on the version ordered, the measuring device can also measure potentially explosive, flammable, poisonous and oxidizing media.

To ensure that the device remains in proper operating condition for its service life, use the measuring device only for media against which the process-wetted materials are sufficiently resistant.

16.2 Function and system design

Measuring principle	Mass flow measurement based on the Coriolis measuring principle
Measuring system	The measuring system consists of a transmitter and a sensor. The transmitter and sensor are mounted in physically separate locations. They are interconnected by one connecting cable(s). For information on the structure of the device → 📄 14

16.3 Input

Measured variable

Direct measured variables

- Mass flow
- Density
- Temperature

Calculated measured variables

- Volume flow
- Corrected volume flow
- Reference density

Measuring range

Measuring ranges for liquids

DN		Measuring range full scale values $\dot{m}_{min(F)}$ to $\dot{m}_{max(F)}$	
[mm]	[in]	[kg/h]	[lb/min]
8	⅜	0 to 2 000	0 to 73.50
15	½	0 to 6 500	0 to 238.9
25	1	0 to 18 000	0 to 661.5
40	1½	0 to 45 000	0 to 1 654
50	2	0 to 70 000	0 to 2 573

Measuring ranges for gases

Measuring ranges valid only for Promass H with tantalum 2.5W.

The full scale values depend on the density of the gas and can be calculated with the formula below:

$\dot{m}_{max(G)} = \dot{m}_{max(F)} \cdot \rho_G : x$

$\dot{m}_{max(G)}$	Maximum full scale value for gas [kg/h]
$\dot{m}_{max(F)}$	Maximum full scale value for liquid [kg/h]
$\dot{m}_{max(G)} < \dot{m}_{max(F)}$	$\dot{m}_{max(G)}$ can never be greater than $\dot{m}_{max(F)}$
ρ_G	Gas density in [kg/m³] at operating conditions
x	Constant dependent on nominal diameter

DN		x
[mm]	[in]	[kg/m³]
8	⅜	60
15	½	80
25	1	90
40	1½	90
50	2	90

Recommended measuring range

"Flow limit" section → 🗎 216

Operable flow range	Over 1000 : 1. Flow rates above the preset full scale value do not override the electronics unit, with the result that the totalizer values are registered correctly.

Input signal

External measured values

To increase the accuracy of certain measured variables or to calculate the corrected volume flow for gases, the automation system can continuously write different measured values to the measuring device:
- Operating pressure to increase accuracy (Endress+Hauser recommends the use of a pressure measuring device for absolute pressure, e.g. Cerabar M or Cerabar S)
- Fluid temperature to increase accuracy (e.g. iTEMP)
- Reference density for calculating the corrected volume flow for gases

Various pressure transmitters and temperature measuring devices can be ordered from Endress+Hauser: see "Accessories" section → 198

It is recommended to read in external measured values to calculate the following measured variables for gases:
- Mass flow
- Corrected volume flow

Current input

The measured values are written from the automation system to the measuring device via the current input → 201.

Digital communication

The measured values are written from the automation system to the measuring device via FOUNDATION Fieldbus.

Current input 0/4 to 20 mA

Current input	0/4 to 20 mA (active/passive)
Current span	▪ 4 to 20 mA (active) ▪ 0/4 to 20 mA (passive)
Resolution	1 µA
Voltage drop	Typically: 0.6 to 2 V for 3.6 to 22 mA (passive)
Maximum input voltage	≤ 30 V (passive)
Open-circuit voltage	≤ 28.8 V (active)
Possible input variables	▪ Pressure ▪ Temperature ▪ Density

Status input

Maximum input values	▪ DC −3 to 30 V ▪ If status input is active (ON): R_i >3 kΩ
Response time	Adjustable: 5 to 200 ms
Input signal level	▪ Low signal: DC −3 to +5 V ▪ High signal: DC 12 to 30 V
Assignable functions	▪ Off ▪ Reset the individual totalizers separately ▪ Reset all totalizers ▪ Flow override

16.4 Output

Output Signal

FOUNDATION Fieldbus

FOUNDATION Fieldbus	H1, IEC 61158-2, galvanically isolated
Data transfer	31.25 KBit/s
Current consumption	10 mA
Permitted supply voltage	9 to 32 V
Bus connection	With integrated reverse polarity protection

Current output 0/4 to 20 mA

Current output	0/4 to 20 mA
Maximum output values	22.5 mA
Current span	Can be set to: ▪ 4 to 20 mA (active) ▪ 0/4 to 20 mA (passive)
Open-circuit voltage	DC 28.8 V (active)
Maximum input voltage	DC 30 V (passive)
Load	0 to 700 Ω
Resolution	0.38 µA
Damping	Adjustable: 0.07 to 999 s
Assignable measured variables	▪ Mass flow ▪ Volume flow ▪ Corrected volume flow ▪ Density ▪ Reference density ▪ Temperature The range of options increases if the measuring device has one or more application packages.

Pulse/frequency/switch output

Function	Can be set to pulse, frequency or switch output
Version	Open collector Can be set to: ▪ Active ▪ Passive
Maximum input values	DC 30 V, 250 mA (passive)
Open-circuit voltage	DC 28.8 V (active)
Voltage drop	For 22.5 mA: ≤ DC 2 V
Pulse output	
Maximum input values	DC 30 V, 250 mA (passive)
Maximum output current	22.5 mA (active)
Open-circuit voltage	DC 28.8 V (active)
Pulse width	Adjustable: 0.05 to 2 000 ms
Maximum pulse rate	10 000 Impulse/s
Pulse value	Adjustable

Assignable measured variables	▪ Mass flow ▪ Volume flow ▪ Corrected volume flow ▪ Density ▪ Reference density ▪ Temperature
Frequency output	
Maximum input values	DC 30 V, 250 mA (passive)
Maximum output current	22.5 mA (active)
Open-circuit voltage	DC 28.8 V (active)
Output frequency	Adjustable: end value frequency 2 to 10 000 Hz (f_{max} = 12 500 Hz)
Damping	Adjustable: 0 to 999 s
Pulse/pause ratio	1:1
Assignable measured variables	▪ Mass flow ▪ Volume flow ▪ Corrected volume flow ▪ Density ▪ Reference density ▪ Temperature The range of options increases if the measuring device has one or more application packages.
Switch output	
Maximum input values	DC 30 V, 250 mA (passive)
Open-circuit voltage	DC 28.8 V (active)
Switching behavior	Binary, conductive or non-conductive
Switching delay	Adjustable: 0 to 100 s
Number of switching cycles	Unlimited
Assignable functions	▪ Off ▪ On ▪ Diagnostic behavior ▪ Limit value – Mass flow – Volume flow – Corrected volume flow – Density – Reference density – Temperature – Totalizer 1-3 ▪ Flow direction monitoring ▪ Status – Partially filled pipe detection – Low flow cut off The range of options increases if the measuring device has one or more application packages.

Relay output

Function	Switch output
Version	Relay output, galvanically isolated
Switching behavior	Can be set to: ▪ NO (normally open), factory setting ▪ NC (normally closed)

Maximum switching capacity (passive)	▪ DC 30 V, 0.1 A ▪ AC 30 V, 0.5 A
Assignable functions	▪ Off ▪ On ▪ Diagnostic behavior ▪ Limit value – Mass flow – Volume flow – Corrected volume flow – Density – Reference density – Temperature – Totalizer 1-3 ▪ Flow direction monitoring ▪ Status – Partially filled pipe detection – Low flow cut off The range of options increases if the measuring device has one or more application packages.

User configurable input/output

One specific input or output is assigned to a user-configurable input/output (configurable I/O) during device commissioning.

The following inputs and outputs are available for assignment:
- Choice of current output: 4 to 20 mA (active), 0/4 to 20 mA (passive)
- Pulse/frequency/switch output
- Choice of current input: 4 to 20 mA (active), 0/4 to 20 mA (passive)
- Status input

The technical values correspond to those of the inputs and outputs described in this section.

Signal on alarm

Depending on the interface, failure information is displayed as follows:

FOUNDATION Fieldbus

Status and alarm messages	Diagnostics in accordance with FF-891
Error current FDE (Fault Disconnection Electronic)	0 mA

Current output 0/4 to 20 mA

4 to 20 mA

Failure mode	Choose from: ▪ 4 to 20 mA in accordance with NAMUR recommendation NE 43 ▪ 4 to 20 mA in accordance with US ▪ Min. value: 3.59 mA ▪ Max. value: 22.5 mA ▪ Freely definable value between: 3.59 to 22.5 mA ▪ Actual value ▪ Last valid value

0 to 20 mA

Failure mode	Choose from: ▪ Maximum alarm: 22 mA ▪ Freely definable value between: 0 to 20.5 mA

Pulse/frequency/switch output

Pulse output	
Failure mode	Choose from: ▪ Actual value ▪ No pulses
Frequency output	
Failure mode	Choose from: ▪ Actual value ▪ 0 Hz ▪ Defined value (f_{max} 2 to 12 500 Hz)
Switch output	
Failure mode	Choose from: ▪ Current status ▪ Open ▪ Closed

Relay output

Failure mode	Choose from: ▪ Current status ▪ Open ▪ Closed

Local display

Plain text display	With information on cause and remedial measures
Backlight	Red backlighting indicates a device error.

Status signal as per NAMUR recommendation NE 107

Interface/protocol

- Via digital communication:
  FOUNDATION Fieldbus
- Via service interface

Plain text display	With information on cause and remedial measures

Web server

Plain text display	With information on cause and remedial measures

Light emitting diodes (LED)

Status information	Status indicated by various light emitting diodes The following information is displayed depending on the device version: ▪ Supply voltage active ▪ Data transmission active ▪ Device alarm/error has occurred Diagnostic information via light emitting diodes

Low flow cut off	The switch points for low flow cut off are user-selectable.
Galvanic isolation	The outputs are galvanically isolated from one another and from earth (PE).

Protocol-specific data

Manufacturer ID	0x452B48 (hex)
Ident number	0x103B (hex)
Device revision	1
DD revision	Information and files under: ▪ www.endress.com ▪ www.fieldbus.org
CFF revision	
Interoperability Test Kit (ITK)	Version 6.2.0
ITK Test Campaign Number	Information: ▪ www.endress.com ▪ www.fieldbus.org
Link Master capability (LAS)	Yes
Choice of "Link Master" and "Basic Device"	Yes Factory setting: Basic Device
Node address	Factory setting: 247 (0xF7)
Supported functions	The following methods are supported: ▪ Restart ▪ ENP Restart ▪ Diagnostic ▪ Set to OOS ▪ Set to AUTO ▪ Read trend data ▪ Read event logbook
Virtual Communication Relationships (VCRs)	
Number of VCRs	44
Number of link objects in VFD	50
Permanent entries	1
Client VCRs	0
Server VCRs	10
Source VCRs	43
Sink VCRs	0
Subscriber VCRs	43
Publisher VCRs	43
Device Link Capabilities	
Slot time	4
Min. delay between PDU	8
Max. response delay	16

Transducer Blocks

Block	Contents	Output values
Setup Transducer Block (TRDSUP)	All parameters for standard commissioning.	No output values
Display Transducer Block (TRDDISP)	Parameters for configuring the local display.	No output values

Block	Contents	Output values
HistoROM Transducer Block (TRDHROM)	Parameters for using the HistoROM function.	No output values
Diagnostic Transducer Block (TRDDIAG)	Diagnostics information.	Process variables (AI Channel) ▪ Temperature (7) ▪ Volume flow (9) ▪ Concentration (10) ▪ Mass flow (11) ▪ Corrected volume flow (13) ▪ Density (14) ▪ Reference density (15) ▪ Carrier pipe temperature (51) ▪ Carrier mass flow (57) ▪ Target mass flow (58) ▪ Electronic temperature (65) ▪ Current input 1 (99)
Expert Configuration Transducer Block (TRDEXP)	Parameters that require the user to have in-depth knowledge of the operation of the device in order to configure the parameters appropriately.	No output values
Service Sensor Transducer Block (TRDSRVS)	Parameters that can only be accessed by Endress +Hauser Service.	No output values
Total Inventory Counter Transducer Block (TRDTIC)	Parameters for configuring all the totalizers and the inventory counter.	Process variables (AI Channel) ▪ Totalizer 1 (16) ▪ Totalizer 2 (17) ▪ Totalizer 3 (18)
Heartbeat Technology Transducer Block (TRDHBT)	Parameters for the configuration and comprehensive information about the results of the verification.	No output values

Function blocks

Block	Number blocks	Execution times	Process variables (Channel)
Resource Block (RB)	1	This Block (extended functionality) contains all the data that uniquely identify the device; it is the equivalent of an electronic nameplate for the device.	–
Analog Input Block (AI)	8	6 ms	Process variables (AI Channel) ▪ Temperature (7) ▪ Volume flow (9) ▪ Concentration (10) ▪ Mass flow (11) ▪ Corrected volume flow (13) ▪ Density (14) ▪ Reference density (15) ▪ Totalizer 1 (16) ▪ Totalizer 2 (17) ▪ Totalizer 3 (18) ▪ Carrier pipe temperature (51) ▪ Carrier mass flow (57) ▪ Target mass flow (58) ▪ Electronic temperature (65) ▪ Current input 1 (99)
Discrete Input Block (DI)	2	4 ms	▪ Switch output state (101) ▪ Low flow cut off (103) ▪ Empty pipe detection (104) ▪ Status verification (105)
PID Block (PID)	1	5 ms	–

Block	Number blocks	Execution times	Process variables (Channel)
Multiple Analog Output Block (MAO)	1	4 ms	Channel_0 (121) ▪ Value 1: External compensation variable, pressure ▪ Value 2: External compensation variable, temperature ▪ Value 3: External compensation variable, reference density The compensation variables must be transmitted to the device in the SI basic units.
Multiple Digital Output Block (MDO)	1	4 ms	Channel_DO (122) ▪ Value 1: Reset totalizer 1 ▪ Value 2: Reset totalizer 2 ▪ Value 3: Reset totalizer 3 ▪ Value 4: Flow override ▪ Value 5: Start heartbeat verification ▪ Value 6: Status switch output ▪ Value 7: Start zero point adjustment ▪ Value 8: Not assigned
Integrator Block (IT)	1	5 ms	–

16.5 Power supply

Terminal assignment

→ 📄 37

Device plugs available

→ 📄 38

Pin assignment, device plug

→ 📄 38

Supply voltage

Order code for "Power supply"	terminal voltage		Frequency range
Option **D**	DC 24 V	±20%	–
Option **E**	AC100 to 240 V	−15...+10%	50/60 Hz
Option **I**	DC 24 V	±20%	–
	AC100 to 240 V	−15...+10%	50/60 Hz

Power consumption

Transmitter

Max. 10 W (active power)

Current consumption

Transmitter

- Max. 400 mA (24 V)
- Max. 200 mA (110 V, 50/60 Hz; 230 V, 50/60 Hz)

Power supply failure	▪ Totalizers stop at the last value measured. ▪ Configuration is retained in the plug-in memory (HistoROM DAT). ▪ Error messages (incl. total operated hours) are stored.
Electrical connection	→ 📄 39
Potential equalization	→ 📄 53
terminals	Spring-loaded terminals: Suitable for strands and strands with ferrules. Conductor cross-section 0.2 to 2.5 mm^2 (24 to 12 AWG).
Cable entries	▪ Cable gland: M20 × 1.5 with cable ⌀ 6 to 12 mm (0.24 to 0.47 in) ▪ Thread for cable entry: – NPT ½" – G ½" – M20 ▪ Device plug for digital communication: M12 ▪ Device plug for connecting cable: M12 A device plug is always used for the device version with the order code for "Sensor connection housing", option **C** "Ultra-compact, hygienic, stainless".
Cable specification	→ 📄 34

16.6 Performance characteristics

reference operating conditions	▪ Error limits based on ISO 11631 ▪ Water with +15 to +45 °C (+59 to +113 °F) at2 to 6 bar (29 to 87 psi) ▪ Specifications as per calibration protocol ▪ Accuracy based on accredited calibration rigs that are traced to ISO 17025. ℹ To obtain measured errors, use the *Applicator* sizing tool → 📄 197
Maximum measured error	o.r. = of reading; 1 g/cm^3 = 1 kg/l; T = medium temperature **Base accuracy** ℹ Design fundamentals → 📄 212 *Mass flow and volume flow (liquids)* ±0.10 % o.r. *Mass flow (gases)* ±0.50 % o.r. (tantalum)

Density (liquids)

Under reference operating conditions [g/cm³]	Standard density calibration [1] [g/cm³]	Wide-range Density specification [2] [3] [g/cm³]
±0.0005	±0.02	±0.002

1) Valid over the entire temperature and density range
2) Valid range for special density calibration: 0 to 2 g/cm³, +10 to +80 °C (+50 to +176 °F)
3) Order code for "Application package", option EF "Special density"

Temperature

±0.5 °C ± 0.005 · T °C (±0.9 °F ± 0.003 · (T − 32) °F)

Zero point stability

DN		Zero point stability	
[mm]	[in]	[kg/h]	[lb/min]
8	⅜	0.40	0.015
15	½	0.65	0.024
25	1	1.80	0.066
40	1½	9.00	0.331
50	2	14.00	0.514

Flow values

Flow values as turndown parameter depending on nominal diameter.

SI units

DN	1:1	1:10	1:20	1:50	1:100	1:500
[mm]	[kg/h]	[kg/h]	[kg/h]	[kg/h]	[kg/h]	[kg/h]
8	2 000	200	100	40	20	4
15	6 500	650	325	130	65	13
25	18 000	1 800	900	360	180	36
40	45 000	4 500	2 250	900	450	90
50	70 000	7 000	3 500	1 400	700	140

US units

DN	1:1	1:10	1:20	1:50	1:100	1:500
[inch]	[lb/min]	[lb/min]	[lb/min]	[lb/min]	[lb/min]	[lb/min]
⅜	73.50	7.350	3.675	1.470	0.735	0.147
½	238.9	23.89	11.95	4.778	2.389	0.478
1	661.5	66.15	33.08	13.23	6.615	1.323
1½	1 654	165.4	82.70	33.08	16.54	3.308
2	2 573	257.3	128.7	51.46	25.73	5.146

Accuracy of outputs

The outputs have the following base accuracy specifications.

Current output

Accuracy	±5 µA

Pulse/frequency output

o.r. = of reading

Accuracy	Max. ±50 ppm o.r. (across the entire ambient temperature range)

Repeatability

o.r. = of reading; 1 g/cm^3 = 1 kg/l; T = medium temperature

Base repeatability

Mass flow and volume flow (liquids)
±0.05 % o.r.

Mass flow (gases)
±0.25 % o.r. (tantalum)

Design fundamentals → 212

Density (liquids)
±0.00025 g/cm^3

Temperature
±0.25 °C ± 0.0025 · T °C (±0.45 °F ± 0.0015 · (T−32) °F)

Response time

The response time depends on the configuration (damping).

Influence of ambient temperature

Current output

Temperature coefficient	Max. 1 µA/°C

Pulse/frequency output

Temperature coefficient	No additional effect. Included in accuracy.

Influence of medium temperature

Mass flow and volume flow

o.f.s. = of full scale value

When there is a difference between the temperature at zero point adjustment and the process temperature, the typical measured error of the sensor is ±0.0002 % o.f.s./°C (±0.0001 % o. f.s./°F).

Density
When there is a difference between the density calibration temperature and the process temperature, the typical measured error of the sensor is
±0.0001 g/cm^3 /°C (±0.00005 g/cm^3 /°F). Field density calibration is possible.

Wide-range density specification (special density calibration)
If the process temperature is outside the valid range (→ 209) the measured error is
±0.0001 g/cm^3 /°C (±0.00005 g/cm^3 /°F)

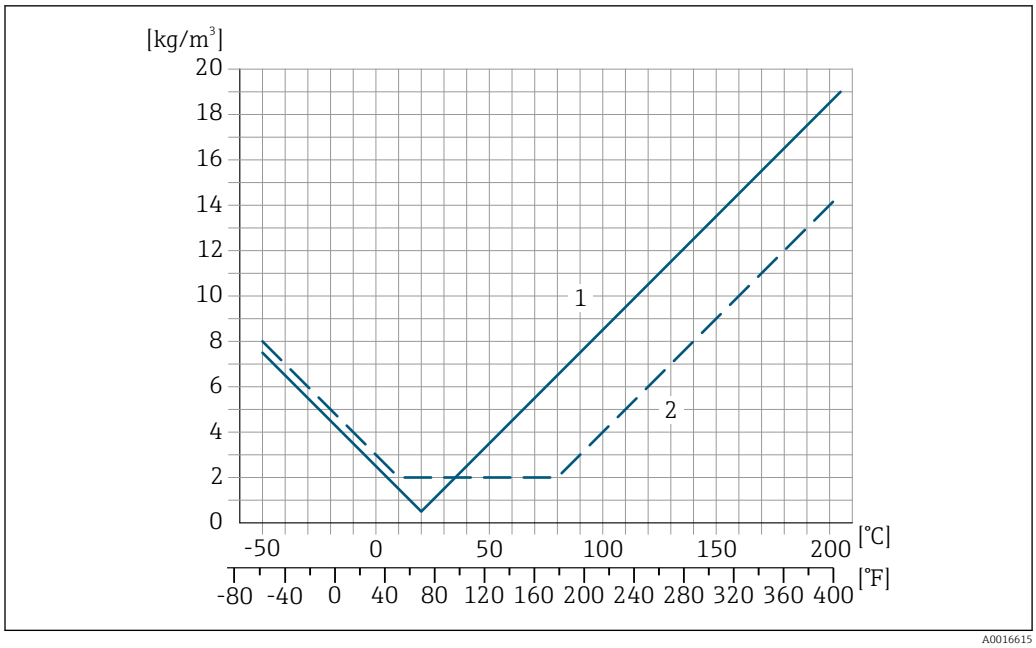

1 Field density calibration, for example at +20 °C (+68 °F)
2 Special density calibration

Temperature
±0.005 · T °C (± 0.005 · (T − 32) °F)

Influence of medium pressure

The table below shows the effect on accuracy of mass flow due to a difference between calibration pressure and process pressure.

o.r. = of reading

DN		Promass H zirconium 702/R 60702		Promass H tantalum 2.5W	
[mm]	[in]	[% o.r./bar]	[% o.r./psi]	[% o.r./bar]	[% o.r./psi]
8	⅜	−0.017	−0.0012	−0.007	−0.0005
15	½	−0.021	−0.0014	−0.005	−0.0003
25	1	−0.013	−0.0009	−0.015	−0.0010
40	1½	−0.018	−0.0012	−0.012	−0.0008
50	2	−0.015	−0.0010	−0.011	−0.0008

Design fundamentals

o.r. = of reading, o.f.s. = of full scale value

BaseAccu = base accuracy in % o.r., BaseRepeat = base repeatability in % o.r.

MeasValue = measured value; ZeroPoint = zero point stability

Calculation of the maximum measured error as a function of the flow rate

Flow rate	Maximum measured error in % o.r.
$\geq \frac{\text{ZeroPoint}}{\text{BaseAccu}} \cdot 100$ A0021332	± BaseAccu A0021339
$< \frac{\text{ZeroPoint}}{\text{BaseAccu}} \cdot 100$ A0021333	$\pm \frac{\text{ZeroPoint}}{\text{MeasValue}} \cdot 100$ A0021334

Calculation of the maximum repeatability as a function of the flow rate

Flow rate	Maximum repeatability in % o.r.
$\geq \frac{½ \cdot \text{ZeroPoint}}{\text{BaseRepeat}} \cdot 100$ A0021335	± BaseRepeat A0021340
$< \frac{½ \cdot \text{ZeroPoint}}{\text{BaseRepeat}} \cdot 100$ A0021336	$\pm ½ \cdot \frac{\text{ZeroPoint}}{\text{MeasValue}} \cdot 100$ A0021337

Example for max. measured error

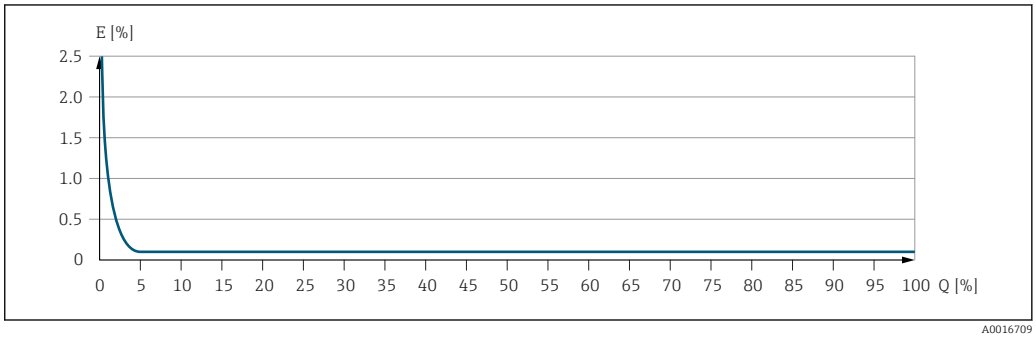

E Error: Maximum measured error as % o.r. (example)
Q Flow rate as %

16.7 Installation

"Mounting requirements"

16.8 Environment

Ambient temperature range

Temperature tables

Observe the interdependencies between the permitted ambient and fluid temperatures when operating the device in hazardous areas.

For detailed information on the temperature tables, see the separate document entitled "Safety Instructions" (XA) for the device.

Storage temperature

−50 to +80 °C (−58 to +176 °F)

Climate class

DIN EN 60068-2-38 (test Z/AD)

Degree of protection

Transmitter
- As standard: IP66/67, type 4X enclosure
- When housing is open: IP20, type 1 enclosure
- Display module: IP20, type 1 enclosure

Sensor
- As standard: IP66/67, type 4X enclosure
- With the order code for "Sensor options", option **CM**: IP69 can also be ordered

External WLAN antenna
IP67

Vibration resistance	▪ Vibration, sinusoidal according to IEC 60068-2-6 – 2 to 8.4 Hz, 3.5 mm peak – 8.4 to 2 000 Hz, 1 g peak ▪ Vibration broad-band random, according to IEC 60068-2-64 – 10 to 200 Hz, 0.003 g^2/Hz – 200 to 2 000 Hz, 0.001 g^2/Hz – Total: 1.54 g rms
Shock resistance	Shock, half-sine according to IEC 60068-2-27 6 ms 30 g
Impact resistance	Rough handling shocks according to IEC 60068-2-31
Mechanical load	Never use the transmitter housing as a ladder or climbing aid.
Electromagnetic compatibility (EMC)	As per IEC/EN 61326 and NAMUR Recommendation 21 (NE 21) For details, refer to the Declaration of Conformity.

16.9 Process

Medium temperature range	▪ Zirconium 702/R 60702: −50 to +205 °C (−58 to +401 °F) ▪ Tantalum 2.5W: −50 to +150 °C (−58 to +302 °F)

Dependency of ambient temperature on medium temperature

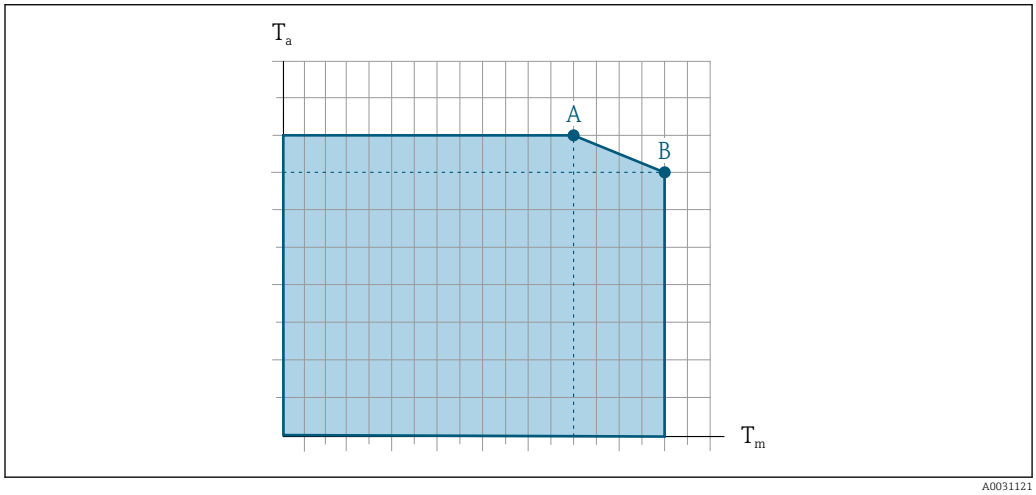

T_a Ambient temperature range
T_m Medium temperature
A Maximum permitted medium temperature T_m at $T_{a\,max}$ = 60 °C (140 °F); higher medium temperatures T_m require a reduced ambient temperature T_a
B Maximum permitted ambient temperature T_a for the maximum specified medium temperature T_m of the sensor

	Not insulated				Insulated			
	A		B		A		B	
	T_a	T_m	T_a	T_m	T_a	T_m	T_a	T_m
Tantalum (order code for "Measuring tube mat.", option EA)	60 °C (140 °F)	150 °C (302 °F)	–	–	60 °C (140 °F)	150 °C (302 °F)	–	–
Zirconium 702 (order code for "Measuring tube mat.", option DA)	60 °C (140 °F)	205 °C (401 °F)	–	–	60 °C (140 °F)	150 °C (302 °F)	55 °C (131 °F)	205 °C (401 °F)

Density

0 to 5 000 kg/m³ (0 to 312 lb/cf)

Pressure-temperature ratings

An overview of the pressure-temperature ratings for the process connections is provided in the "Technical Information" document

Secondary containment

The sensor housing is filled with dry nitrogen gas and protects the electronics and mechanics inside.

The following secondary containment pressure ratings/burst pressures are only valid for standard devices and/or devices equipped with closed purge connections (never opened/as delivered).

If a device fitted with purge connections (order code for "Sensor option", option **CH** "Purge connection") is connected to the purge system, the maximum nominal pressure is determined by the purge system itself or by the device, depending on which component has the lower nominal pressure classification.

The secondary containment burst pressure refers to a typical internal pressure achieved prior to mechanical failure of the secondary containment as determined during type testing. The corresponding type test declaration can be ordered with the device (order code for "Additional Approval", option **LN** "Type test containment").

DN		Secondary containment pressure rating (designed with a safety factor ≥ 4)		Secondary containment burst pressure	
[mm]	[in]	[bar]	[psi]	[bar]	[psi]
8	⅜	25	362	170	2 465
15	½	25	362	160	2 320
25	1	25	362	130	1 885
40	1½	16	232	85	1 232
50	2	16	232	85	1 232

If a measuring tube fails (e.g. due to process characteristics like corrosive or abrasive fluids), the fluid will be contained by the secondary containment.

If the sensor is to be purged with gas (gas detection), it should be equipped with purge connections.

Do not open the purge connections unless the secondary containment can be filled immediately with a dry, inert gas. Use only low pressure to purge. Maximum pressure: 5 bar (72.5 psi).

For information on the dimensions: see the "Mechanical construction" section of the "Technical Information" document

Flow limit

Select the nominal diameter by optimizing between the required flow range and permissible pressure loss.

For an overview of the full scale values for the measuring range, see the "Measuring range" section → 📄 200

- The minimum recommended full scale value is approx. 1/20 of the maximum full scale value
- In most applications, 20 to 50 % of the maximum full scale value can be considered ideal
- A low full scale value must be selected for abrasive media (such as liquids with entrained solids): flow velocity < 1 m/s (< 3 ft/s).
- For gas measurement the following rules apply:
  - The flow velocity in the measuring tubes should not exceed half the sound velocity (0.5 Mach).
  - The maximum mass flow depends on the density of the gas: formula → 📄 200

Pressure loss

To calculate the pressure loss, use the *Applicator* sizing tool → 📄 197

System pressure

→ 📄 25

16.10 Mechanical construction

Design, dimensions

For the dimensions and installation lengths of the device, see the "Technical Information" document, "Mechanical construction" section.

Weight

All values (weight) refer to devices with EN/DIN PN 40 flanges.

Transmitter
- Proline 500 – digital polycarbonate: 1.4 kg (3.1 lbs)
- Proline 500 – digital aluminum: 2.4 kg (5.3 lbs)
- Proline 500 aluminum: 6.5 kg (14.3 lbs)
- Proline 500 cast, stainless: 15.6 kg (34.4 lbs)

Sensor
- Sensor with aluminum connection housing version: see the information in the following table
- Cast connection housing version, stainless: +3.7 kg (+8.2 lbs)

Weight in SI units

DN [mm]	Weight [kg]
8	10
15	11
25	17
40	34
50	67

Weight in US units

DN [in]	Weight [lbs]
3/8	22
½	24
1	37
1½	75
2	148

Materials

Transmitter housing

Proline 500 – digital transmitter housing

Order code for "Transmitter housing":
- Option **A** "Aluminum coated": aluminum, AlSi10Mg, coated
- Option **D** "Polycarbonate": polycarbonate

Proline 500 transmitter housing

Order code for "Transmitter housing":
- Option **A** "Aluminum coated": aluminum, AlSi10Mg, coated
- Option **L** "Cast, stainless": cast, stainless steel, 1.4409 (CF3M) similar to 316L

Window material

Order code for "Transmitter housing":
- Option **A** "Aluminum, coated": glass
- Option **D** "Polycarbonate": plastic
- Option **L** "Cast, stainless": glass

Sensor connection housing

Order code for "Sensor connection housing":
- Option **A** "Aluminum coated": aluminum, AlSi10Mg, coated
- Option **B** "Stainless":
  - Stainless steel 1.4301 (304)
  - Optional: Order code for "Sensor feature", option **CC** "Hygienic version, for maximum corrosion resistance": stainless steel, 1.4404 (316L)
- Option **C** "Ultra-compact, stainless":
  - Stainless steel 1.4301 (304)
  - Optional: Order code for "Sensor feature", option **CC** "Hygienic version, for maximum corrosion resistance": stainless steel, 1.4404 (316L)
- Option **L** "Cast, stainless": 1.4409 (CF3M) similar to 316L

Cable entries/cable glands

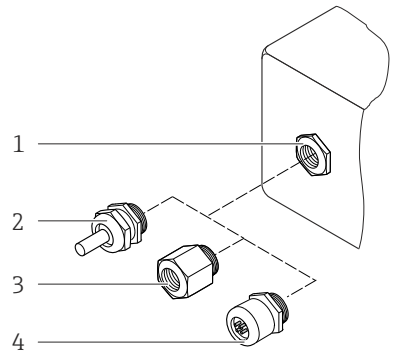

A0028352

38 Possible cable entries/cable glands

1 Cable entry with M20 × 1.5 internal thread
2 Cable gland M20 × 1.5
3 Adapter for cable entry with internal thread G ½" or NPT ½"
4 Device plug coupling

Cable entries and adapters	Material
Cable gland M20 × 1.5	Plastic
▪ Adapter for cable entry with internal thread G ½" ▪ Adapter for cable entry with internal thread NPT ½" Only available for certain device versions: ▪ Order code for "Transmitter housing": – Option **A** "Aluminum, coated" – Option **D** "Polycarbonate" ▪ Order code for "Sensor connection housing": – Option **A** "Aluminum coated" – Proline 500 – digital: Option **B** "Stainless" – Option **C** "Ultra-compact hygienic, stainless"	Nickel-plated brass
▪ Adapter for cable entry with internal thread G ½" ▪ Adapter for cable entry with internal thread NPT ½" Only available for certain device versions: ▪ Order code for "Transmitter housing": Option **L** "Cast, stainless" ▪ Order code for "Sensor connection housing": Option **L** "Cast, stainless"	Stainless steel, 1.4404 (316L)
Adapter for device plug Device plug for digital communication: Only available for certain device versions .	Stainless steel, 1.4404 (316L)
Device plug coupling	Plug M12 × 1 ▪ Socket: Stainless steel, 1.4404 (316L) ▪ Contact housing: Polyamide ▪ Contacts: Gold-plated brass

Device plug

Electrical connection	Material
Plug M12x1	▪ Socket: Stainless steel, 1.4404 (316L) ▪ Contact housing: Polyamide ▪ Contacts: Gold-plated brass

Connecting cable

Connecting cable for sensor - Proline 500 – digital transmitter

PVC cable with copper shield

Connecting cable for sensor - Proline 500 transmitter

- Standard cable: PVC cable with copper shield
- Reinforced cable: PVC cable with copper shield and additional steel wire braided jacket

Sensor housing

- Acid and alkali-resistant outer surface
- Stainless steel 1.4301 (304)

Measuring tubes

- Zirconium 702/R 60702
- Tantalum 2.5W

Process connections

- Stainless steel, 1.4301 (304); wetted parts: zirconium 702, tantalum
- Flanges according to EN 1092-1 (DIN 2501) / according to ASME B16.5 / according to JIS B2220

List of all available process connections → 219

Seals

Welded process connections without internal seals

Accessories

Protective cover

Stainless steel, 1.4404 (316L)

External WLAN antenna

- WLAN antenna:
  ASA plastic (acrylic ester-styrene-acrylonitrile) and nickel-plated brass
- Adapter:
  Stainless steel and copper

Process connections	Fixed flange connections: – EN 1092-1 (DIN 2501) flange – EN 1092-1 (DIN 2512N) flange – ASME B16.5 flange – JIS B2220 flange For information on the different materials used in the process connections → 219
Surface roughness	All data relate to parts in contact with fluid. The following surface roughness quality can be ordered. Not polished

16.11 Operability

Languages

Can be operated in the following languages:
- Via local operation
  English, German, French, Spanish, Italian, Dutch, Portuguese, Polish, Russian, Turkish, Chinese, Japanese, Korean, Arabic, Bahasa (Indonesian), Thai, Vietnamese, Czech, Swedish
- Via Web browser
  English, German, French, Spanish, Italian, Dutch, Portuguese, Polish, Russian, Turkish, Chinese, Japanese, Korean, Arabic, Bahasa (Indonesian), Thai, Vietnamese, Czech, Swedish
- Via "FieldCare", "DeviceCare" operating tool: English, German, French, Spanish, Italian, Chinese, Japanese

Local operation

Via display module

Two display modules are available:
- Order code for "Display; operation", option **F** "4-line, backlit, graphic display; touch control"
- Order code for "Display; operation", option **G** "4-line, backlit, graphic display; touch control + WLAN"

Information about WLAN interface → 81

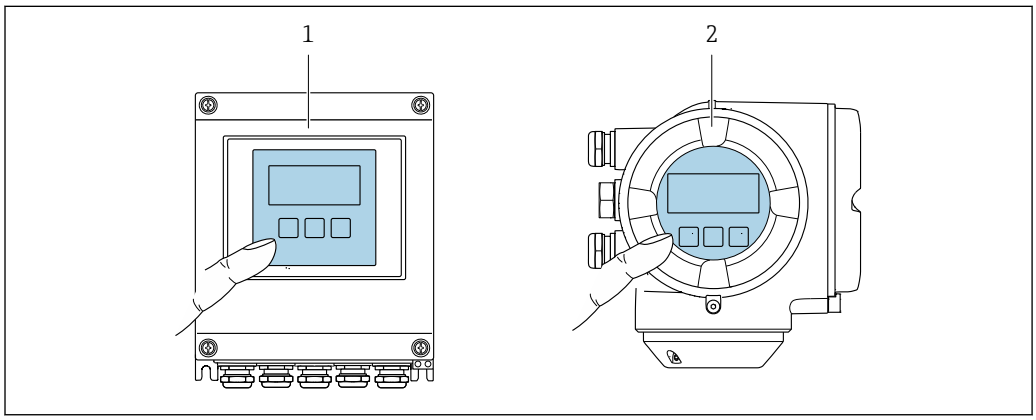

39 Operation with touch control

1 Proline 500 – digital
2 Proline 500

Display elements

- 4-line, illuminated, graphic display
- White background lighting; switches to red in event of device errors
- Format for displaying measured variables and status variables can be individually configured
- Permitted ambient temperature for the display: −20 to +60 °C (−4 to +140 °F)
  The readability of the display may be impaired at temperatures outside the temperature range.

Operating elements

- External operation via touch control (3 optical keys) without opening the housing: ⊞, ⊟, E
- Operating elements also accessible in various hazardous areas

Remote operation	→ 📄 80
Service interface	→ 📄 80

Supported operating tools

Different operating tools can be used for local or remote access to the measuring device. Depending on the operating tool used, access is possible with different operating units and via a variety of interfaces.

Supported operating tools	Operating unit	Interface	Additional information
Web browser	Notebook, PC or tablet with Web browser	▪ CDI-RJ45 service interface ▪ WLAN interface	Special Documentation for the device → 📄 227
DeviceCare SFE100	Notebook, PC or tablet with Microsoft Windows system	▪ CDI-RJ45 service interface ▪ WLAN interface ▪ Fieldbus protocol	→ 📄 197
FieldCare SFE500	Notebook, PC or tablet with Microsoft Windows system	▪ CDI-RJ45 service interface ▪ WLAN interface ▪ Fieldbus protocol	→ 📄 197
Device Xpert	Field Xpert SFX 100/350/370	HART and FOUNDATION Fieldbus fieldbus protocol	Operating Instructions BA01202S Device description files: Use update function of handheld terminal

Other operating tools based on FDT technology with a device driver such as DTM/iDTM or DD/EDD can be used for device operation. These operating tools are available from the individual manufacturers. Integration into the following operating tools, among others, is supported:

- Asset Management Solutions (AMS) by Emerson → www.emersonprocess.com
- FieldCommunicator 375/475 by Emerson → www.emersonprocess.com
- Field Device Manager (FDM) by Honeywell → www.honeywellprocess.com
- FieldMate by Yokogawa → www.yokogawa.com
- PACTWare → www.pactware.com

The associated device description files are available at: www.endress.com → Downloads

Web server

Thanks to the integrated Web server, the device can be operated and configured via a Web browser and via a service interface (CDI-RJ45) or via a WLAN interface. The structure of the operating menu is the same as for the local display. In addition to the measured values, status information on the device is also displayed and allows the user to monitor the status of the device. Furthermore the device data can be managed and the network parameters can be configured.

A device that has a WLAN interface (can be ordered as an option) is required for the WLAN connection: order code for "Display; operation", option **G** "4-line, illuminated; touch control + WLAN". The device acts as an Access Point and enables communication by computer or a mobile handheld terminal.

Supported functions
Data exchange between the operating unit (such as a notebook for example) and the measuring device:
- Uploading the configuration from the measuring device (XML format, configuration backup)
- Save the configuration to the measuring device (XML format, restore configuration)
- Export event list (.csv file)
- Export parameter settings (.csv file, create documentation of the measuring point configuration)
- Export the Heartbeat verification log (PDF file, only available with the "Heartbeat Verification" application package)
- Flash firmware version for device firmware upgrade, for instance
- Download driver for system integration

HistoROM data management

The measuring device features HistoROM data management. HistoROM data management comprises both the storage and import/export of key device and process data, making operation and servicing far more reliable, secure and efficient.

When the device is delivered, the factory settings of the configuration data are stored as a backup in the device memory. This memory can be overwritten with an updated data record, for example after commissioning.

Additional information on the data storage concept

There are different types of data storage units in which device data are stored and used by the device:

	Device memory	T-DAT	S-DAT
Available data	▪ Event history, such as diagnostic events ▪ Parameter data record backup ▪ Device firmware package ▪ Driver for system integration e.g.: DD for FOUNDATION Fieldbus	▪ Measured value memory ("Extended HistoROM" order option) ▪ Current parameter data record (used by firmware at run time) ▪ Maximum indicators (min/max values) ▪ Totalizer values	▪ Sensor data: diameter etc. ▪ Serial number ▪ User-specific access code (to use the "Maintenance" user role) ▪ Calibration data ▪ Device configuration (e.g. SW options, fixed I/O or multi I/O)
Storage location	Fixed on the user interface board in the connection compartment	Can be plugged into the user interface board in the connection compartment	In the sensor plug in the transmitter neck part

Data backup

Automatic
- The most important device data (sensor and transmitter) are automatically saved in the DAT modules
- If the transmitter or measuring device is replaced: once the T-DAT containing the previous device data has been exchanged, the new measuring device is ready for operation again immediately without any errors
- If the sensor is replaced: once the sensor has been replaced, new sensor data are transferred from the S-DAT in the measuring device and the measuring device is ready for operation again immediately without any errors

Manual
Additional parameter data record (complete parameter settings) in the integrated device memory for:
- Data backup function
  Backup and subsequent restoration of a device configuration in the device memory
- Data comparison function
  Comparison of the current device configuration with the device configuration saved in the device memory

Data transfer

Manual
Transfer of a device configuration to another device using the export function of the specific operating tool, e.g. with FieldCare, DeviceCare or Web server: to duplicate the configuration or to store in an archive (e.g. for backup purposes)

Event list

Automatic
- Chronological display of up to 20 event messages in the events list
- If the **Extended HistoROM** application package (order option) is enabled: up to 100 event messages are displayed in the events list along with a time stamp, plain text description and remedial measures
- The events list can be exported and displayed via a variety of interfaces and operating tools e.g. DeviceCare, FieldCare or Web server

Data logging

Manual
If the **Extended HistoROM** application package (order option) is enabled:
- Record up to 1 000 measured values via 1 to 4 channels
- User configurable recording interval
- Record up to 250 measured values via each of the 4 memory channels
- Export the measured value log via a variety of interfaces and operating tools e.g. FieldCare, DeviceCare or Web server
- Use the recorded measured value data in the integrated device simulation function in the **Diagnostics** submenu (→ 📄 186).

Service logbook

Manual
- Create up to 20 user-specific events with a date and customized text in a separate logbook for documentation of the measuring point
- Use for calibration or service operations, for example, or for maintenance or revision work that has been performed

16.12 Certificates and approvals

CE mark	The measuring system is in conformity with the statutory requirements of the applicable EU Directives. These are listed in the corresponding EU Declaration of Conformity along with the standards applied. Endress+Hauser confirms successful testing of the device by affixing to it the CE mark.
C-Tick symbol	The measuring system meets the EMC requirements of the "Australian Communications and Media Authority (ACMA)".
Ex approval	The devices are certified for use in hazardous areas and the relevant safety instructions are provided in the separate "Safety Instructions" (XA) document. Reference is made to this document on the nameplate.

FOUNDATION Fieldbus certification	**FOUNDATION Fieldbus interface** The measuring device is certified and registered by the FieldComm Group. The measuring system meets all the requirements of the following specifications: ▪ Certified in accordance with FOUNDATION Fieldbus H1 ▪ Interoperability Test Kit (ITK), revision version 6.2.0 (certificate available on request) ▪ Physical Layer Conformance Test ▪ The device can also be operated with certified devices of other manufacturers (interoperability)
Pressure Equipment Directive	▪ With the identification PED/G1/x (x = category) on the sensor nameplate, Endress +Hauser confirms conformity with the "Essential Safety Requirements" specified in Appendix I of the Pressure Equipment Directive 2014/68/EC. ▪ Devices not bearing this marking (PED) are designed and manufactured according to good engineering practice. They meet the requirements of Art. 4, Par. 3 of the Pressure Equipment Directive 2014/68/EU. The range of application is indicated in tables 6 to 9 in Annex II of the Pressure Equipment Directive 2014/68/EC.
Radio approval	Europe: RED 2014/53/EU United States of America: CFR Title 47, FCC Part 15.247 Canada: RSS-247 Issue 1 Japan: Article 2 clause 1 item 19 Additional country-specific approvals on request.
Additional certification	**CRN approval** Some device versions have CRN approval. A CRN-approved process connection with a CSA approval must be ordered for a CRN-approved device. **Tests and certificates** ▪ Pressure test, internal procedure, inspection certificate ▪ EN10204-3.1 Material certificate, wetted parts and secondary containment ▪ PMI test (XRF), internal procedure, wetted parts, test report ▪ EN10204-2.1 confirmation of compliance with the order and EN10204-2.2 test report
Other standards and guidelines	▪ EN 60529 Degrees of protection provided by enclosures (IP code) ▪ IEC/EN 60068-2-6 Environmental influences: Test procedure - Test Fc: vibrate (sinusoidal). ▪ IEC/EN 60068-2-31 Environmental influences: Test procedure - Test Ec: shocks due to rough handling, primarily for devices. ▪ EN 61010-1 Safety requirements for electrical equipment for measurement, control and laboratory use - general requirements ▪ IEC/EN 61326 Emission in accordance with Class A requirements. Electromagnetic compatibility (EMC requirements).

- NAMUR NE 21
  Electromagnetic compatibility (EMC) of industrial process and laboratory control equipment
- NAMUR NE 32
  Data retention in the event of a power failure in field and control instruments with microprocessors
- NAMUR NE 43
  Standardization of the signal level for the breakdown information of digital transmitters with analog output signal.
- NAMUR NE 53
  Software of field devices and signal-processing devices with digital electronics
- NAMUR NE 80
  The application of the pressure equipment directive to process control devices
- NAMUR NE 105
  Specifications for integrating fieldbus devices in engineering tools for field devices
- NAMUR NE 107
  Self-monitoring and diagnosis of field devices
- NAMUR NE 131
  Requirements for field devices for standard applications
- NAMUR NE 132
  Coriolis mass meter

16.13 Application packages

Many different application packages are available to enhance the functionality of the device. Such packages might be needed to address safety aspects or specific application requirements.

The application packages can be ordered with the device or subsequently from Endress+Hauser. Detailed information on the order code in question is available from your local Endress+Hauser sales center or on the product page of the Endress+Hauser website: www.endress.com.

Detailed information on the application packages:
Special Documentation for the device → 📄 227

Diagnostics functions

Package	Description
Extended HistoROM	Comprises extended functions concerning the event log and the activation of the measured value memory. Event log: Memory volume is extended from 20 message entries (standard version) to up to 100 entries. Data logging (line recorder): ▪ Memory capacity for up to 1000 measured values is activated. ▪ 250 measured values can be output via each of the 4 memory channels. The recording interval can be defined and configured by the user. ▪ Measured value logs can be accessed via the local display or operating tool e.g. FieldCare, DeviceCare or Web server.

Heartbeat Technology

Package	Description
Heartbeat Verification +Monitoring	**Heartbeat Monitoring** Continuously supplies data, which are characteristic of the measuring principle, to an external condition monitoring system for the purpose of preventive maintenance or process analysis. These data enable the operator to: ▪ Draw conclusions - using these data and other information - about the impact process influences (such as corrosion, abrasion, buildup etc.) have on the measuring performance over time. ▪ Schedule servicing in time. ▪ Monitor the process or product quality, e.g. gas pockets. **Heartbeat Verification** Meets the requirement for traceable verification to DIN ISO 9001:2008 Chapter 7.6 a) "Control of monitoring and measuring equipment". ▪ Functional testing in the installed state without interrupting the process. ▪ Traceable verification results on request, including a report. ▪ Simple testing process via local operation or other operating interfaces. ▪ Clear measuring point assessment (pass/fail) with high test coverage within the framework of manufacturer specifications. ▪ Extension of calibration intervals according to operator's risk assessment.

Concentration

Package	Description
Concentration measurement and special density	**Calculation and outputting of fluid concentrations** Many applications use density as a key measured value for monitoring quality or controlling processes. The device measures the density of the fluid as standard and makes this value available to the control system. The "Special Density" application package offers high-precision density measurement over a wide density and temperature range particularly for applications subject to varying process conditions. With the help of the "Concentration Measurement" application package, the measured density is used to calculate other process parameters: ▪ Temperature-compensated density (reference density). ▪ Percentage mass of the individual substances in a two-phase fluid. (Concentration in %). ▪ Fluid concentration is output with special units (°Brix, °Baumé, °API, etc.) for standard applications.

16.14 Accessories

Overview of accessories available for order → 196

16.15 Supplementary documentation

For an overview of the scope of the associated Technical Documentation, refer to the following:
- The *W@M Device Viewer* : Enter the serial number from the nameplate (www.endress.com/deviceviewer)
- The *Endress+Hauser Operations App*: Enter the serial number from the nameplate or scan the 2-D matrix code (QR code) on the nameplate.

Standard documentation

Brief Operating Instructions

Brief Operating Instructions for the sensor

Measuring device	Documentation code
Proline Promass H	KA01283D

Brief Operating Instructions for transmitter

Measuring device	Documentation code
Proline 500 – digital	KA01233D
Proline 500	KA01291D

Technical Information

Measuring device	Documentation code
Promass H 500	TI01283D

Description of device parameters

Measuring device	Documentation code
Promass 500	GP01096D

Supplementary device-dependent documentation

Safety Instructions

Contents	Documentation code Measuring device
ATEX/IECEx Ex i	XA01473D
ATEX/IECEx Ex ec	XA01474D
cCSAus IS	XA01475D
cCSAus Ex i	XA01509D
cCSAus Ex nA	XA01510D
INMETRO Ex i	XA01476D
INMETRO Ex ec	XA01477D
NEPSI Ex i	XA01478D
NEPSI Ex nA	XA01479D

Special Documentation

Contents	Documentation code
Information on the Pressure Equipment Directive	SD01614D
Web server	SD01669D
Heartbeat Technology	SD01703D
Concentration measurement	SD01709D

Installation Instructions

Contents	Documentation code
Installation Instructions for spare part sets	Overview of accessories available for order → 196

Index

A

Access authorization to parameters
- Read access . . . 72
- Write access . . . 72

Access code . . . 72
- Incorrect input . . . 72

Accuracy . . . 209
Adapting the diagnostic behavior . . . 161
Adapting the status signal . . . 161
Additional certification . . . 224
Ambient temperature
- Influence . . . 211

Ambient temperature range . . . 24
AMS Device Manager . . . 84
- Function . . . 84

Application . . . 199
Application packages . . . 225
Applicator . . . 200
Approvals . . . 223

C

C-Tick symbol . . . 223
Cable entries
- Technical data . . . 209

Cable entry
- Degree of protection . . . 56

CE mark . . . 11, 223
Certificates . . . 223
Check
- Installation . . . 33

Checklist
- Post-connection check . . . 57
- Post-installation check . . . 33

Cleaning
- Exterior cleaning . . . 193

Climate class . . . 213
Commissioning . . . 92
- Advanced settings . . . 121
- Configuring the measuring device . . . 93

Connecting cable . . . 34
Connecting the connecting cable
- Proline 500 – digital transmitter . . . 44
- Proline 500 terminal assignment . . . 47
- Proline 500 transmitter . . . 50
- Sensor connection housing, Proline 500 . . . 47
- Sensor connection housing, Proline 500 - digital . . . 39
- Terminal assignment of Proline 500 - digital . . . 39

Connecting the measuring device
- Proline 500 . . . 47
- Proline 500 – digital . . . 39

Connecting the signal cable/supply voltage cable
- Proline 500 – digital transmitter . . . 45
- Proline 500 transmitter . . . 51

Connection
- see Electrical connection

Connection preparations . . . 38
Connection tools . . . 34
Context menu
- Calling up . . . 67
- Closing . . . 67
- Explanation . . . 67

Current consumption . . . 208
Cyclic data transmission . . . 86

D

Declaration of Conformity . . . 11
Define access code . . . 136
Degree of protection . . . 56, 213
Density . . . 215
Design fundamentals
- Maximum measured error . . . 212
- Repeatability . . . 212

Designated use . . . 10
Device components . . . 14
Device description files . . . 86
Device documentation
- Supplementary documentation . . . 8

Device locking, status . . . 140
Device name
- Sensor . . . 19
- Transmitter . . . 17

Device repair . . . 194
Device revision . . . 86
Device type ID . . . 86
DeviceCare . . . 84
- Device description file . . . 86

Diagnostic behavior
- Explanation . . . 157
- Symbols . . . 157

Diagnostic information
- Design, description . . . 157, 160
- DeviceCare . . . 159
- FieldCare . . . 159
- Light emitting diodes . . . 152
- Local display . . . 156
- Overview . . . 165
- Remedial measures . . . 165
- Web browser . . . 158

Diagnostic list . . . 187
Diagnostic message . . . 156
DIAGNOSTIC Transducer Block . . . 187
Diagnostics
- Symbols . . . 156

DIP switches
- see Write protection switch

Direct access . . . 69
Direct access code . . . 63
Disabling write protection . . . 136
Display
- see Local display

Display area
- For operational display . . . 62

In the navigation view . . . 64
Display values
For locking status . . . 140
Disposal . . . 195
Document
Function . . . 6
Symbols used . . . 6
Document function . . . 6
Down pipe . . . 23

E

Electrical connection
Degree of protection . . . 56
Measuring device . . . 34
Operating tools
Via FOUNDATION Fieldbus network . . . 80
Via service interface (CDI-RJ45) . . . 80
Via WLAN interface . . . 81
Web server . . . 80
WLAN interface . . . 81
Electromagnetic compatibility . . . 214
Electronics module . . . 14
Enabling write protection . . . 136
Endress+Hauser services
Maintenance . . . 193
Repair . . . 194
Environment
Impact resistance . . . 214
Mechanical load . . . 214
Shock resistance . . . 214
Storage temperature . . . 213
Vibration resistance . . . 214
Error messages
see Diagnostic messages
Event history . . . 188
Event list . . . 188
Ex approval . . . 223
Extended order code
Sensor . . . 19
Transmitter . . . 17
Exterior cleaning . . . 193

F

Field Communicator
Function . . . 85
Field Communicator 475 . . . 85
Field of application
Residual risks . . . 11
Field Xpert
Function . . . 82
Field Xpert SFX350 . . . 82
FieldCare . . . 83
Device description file . . . 86
Establishing a connection . . . 83
Function . . . 83
User interface . . . 84
Filtering the event logbook . . . 189
Firmware
Release date . . . 86
Version . . . 86
Firmware history . . . 192
Flow direction . . . 23, 29
Flow limit . . . 216
FOUNDATION Fieldbus certification . . . 224
Function check . . . 92
Function scope
AMS Device Manager . . . 84
Field Communicator . . . 85
Field Communicator 475 . . . 85
Field Xpert . . . 82
Functions
see Parameter

G

Galvanic isolation . . . 206

H

Hardware write protection . . . 137
Help text
Calling up . . . 70
Closing . . . 70
Explanation . . . 70
HistoROM . . . 130

I

Identifying the measuring device . . . 16
Impact resistance . . . 214
Incoming acceptance . . . 16
Influence
Ambient temperature . . . 211
Medium pressure . . . 212
Medium temperature . . . 211
Information on the document . . . 6
Inlet runs . . . 24
Input . . . 200
Input mask . . . 65
Inspection
Received goods . . . 16
Inspection check
Connection . . . 57
Installation . . . 22
Installation conditions
Down pipe . . . 23
Inlet and outlet runs . . . 24
Installation dimensions . . . 24
Mounting location . . . 22
Orientation . . . 23
Sensor heating . . . 26
System pressure . . . 25
Thermal insulation . . . 25
Vibrations . . . 27
Installation dimensions . . . 24

K

Keypad lock
Disabling . . . 72
Enabling . . . 72

L

Languages, operation options 220
Line recorder 147
Local display 220
  Editing view 65
  Navigation view 63
  see Diagnostic message
  see In alarm condition
  see Operational display
Low flow cut off 206

M

Main electronics module 14
Maintenance tasks 193
Managing the device configuration 130
Manufacturer ID 86
Manufacturing date 17, 19
Materials 217
Maximum measured error 209
Measured values
  see Process variables
Measuring and test equipment 193
Measuring device
  Configuration 93
  Conversion 194
  Disposal 195
  Mounting the sensor 29
  Preparing for electrical connection 38
  Preparing for mounting 29
  Removing 195
  Repairs 194
  Structure 14
  Switch-on 92
Measuring principle 199
Measuring range
  For gases 200
  For liquids 200
Measuring range, recommended 216
Measuring system 199
Mechanical load 214
Medium pressure
  Influence 212
Medium temperature
  Influence 211
Menu
  Diagnostics 186
  Setup 94
Menus
  For measuring device configuration 93
  For specific settings 121
Mounting dimensions
  see Installation dimensions
Mounting location 22
Mounting preparations 29
Mounting tools 28

N

Nameplate
  Sensor 19
  Transmitter 17
Navigation path (navigation view) 63
Navigation view
  In the submenu 63
  In the wizard 63
Numeric editor 65

O

Operable flow range 201
Operating elements 66, 157
Operating keys
  see Operating elements
Operating menu
  Menus, submenus 59
  Structure 59
  Submenus and user roles 60
Operating philosophy 60
Operation 140
Operation options 58
Operational display 61
Operational safety 11
Order code 17, 19
Orientation (vertical, horizontal) 23
Outlet runs 24
Output 202
Output Signal 202

P

Packaging disposal 22
Parameter settings
  Administration (Submenu) 132
  Advanced setup (Submenu) 122
  Analog inputs (Submenu) 99
  Calculated values (Submenu) 122
  Configuration backup (Submenu) 130
  Current input 100
  Current input (Wizard) 100
  Current input 1 to n (Submenu) 143
  Current output 102
  Current output (Wizard) 102
  Data logging (Submenu) 147
  Define access code (Wizard) 132
  Device information (Submenu) 191
  Diagnostics (Menu) 186
  Display (Submenu) 126
  Display (Wizard) 116
  I/O configuration 100
  I/O configuration (Submenu) 100
  Low flow cut off (Wizard) 119
  Measured variables (Submenu) 141
  Partially filled pipe detection (Wizard) 120
  Pulse/frequency/switch output 105
  Pulse/frequency/switch output (Wizard) 105, 107, 112
  Pulse/frequency/switch output 1 to n (Submenu) 145
  Relay output 114
  Relay output 1 to n (Submenu) 145
  Relay output 1 to n (Wizard) 114
  Reset access code (Submenu) 132

Select medium (Wizard) 97
Sensor adjustment (Submenu) 123
Setup (Menu) 94
Simulation (Submenu) 133
Status input 101
Status input (Submenu) 101
Status input 1 to n (Submenu) 143
System units (Submenu) 94
Totalizer (Submenu) 142
Totalizer 1 to n (Submenu) 124
Totalizer handling (Submenu) 146
Value current output 1 to n (Submenu) 144
Web server (Submenu) 79
WLAN Settings (Submenu) 129
Zero point adjustment (Submenu) 124
Parameters
Changing 71
Enter a value 71
Performance characteristics 209
Post-connection check (checklist) 57
Post-installation check 92
Post-installation check (checklist) 33
Potential equalization 53
Power consumption 208
Power supply failure 209
Pressure Equipment Directive 224
Pressure loss 216
Pressure-temperature ratings 215
Process connections 219
Process variables
Calculated 200
Measured 200
Product safety 11
Proline 500 – digital transmitter
Connecting the signal cable/supply voltage cable . . 45
Proline 500 connecting cable terminal assignment
Sensor connection housing 47
Proline 500 transmitter
Connecting the signal cable/supply voltage cable . . 51
Protecting parameter settings 136

R

Radio approval 224
Read access 72
Reading measured values 140
Recalibration 193
reference operating conditions 209
Registered trademarks 9
Remedial measures
Calling up 158
Closing 158
Remote operation 221
Repair of a device 194
Repairs 194
Notes 194
Repeatability 211
Replacement
Device components 194
Requirements for personnel 10
Response time 211
Return 194

S

Safety 10
Secondary containment 215
Sensor
Mounting 29
Sensor heating 26
Serial number 17, 19
Setting the operating language 92
Settings
Adapting the measuring device to the process conditions 146
Administration 131
Advanced display configurations 126
Analog input 99
Current input 100
Current output 102
Device reset 190
Device tag 94
I/O configuration 100
Local display 116
Low flow cut off 119
Managing the device configuration 130
Medium 97
Operating language 92
Partial filled pipe detection 120
Pulse output 105
Pulse/frequency/switch output 105, 107
Relay output 114
Resetting the totalizer 146
Restart device 190
Sensor adjustment 123
Simulation 133
Status input 101
Switch output 112
System units 94
Totalizer 124
Totalizer reset 146
WLAN 129
Shock resistance 214
Showing data logging 147
Signal on alarm 204
Software release 86
Spare part 194
Spare parts 194
Special connection instructions 54
Standards and guidelines 224
Status area
For operational display 62
In the navigation view 63
Status signals 156, 159
Storage conditions 21
Storage temperature 21
Storage temperature range 213
Structure
Measuring device 14
Operating menu 59

Submenu
Administration 131, 132
Advanced setup 121, 122
Analog inputs 99
Calculated values 122
Configuration backup 130
Current input 1 to n 143
Data logging 147
Device information 191
Display 126
Event list 188
I/O configuration 100
Input values 143
Measured values 140
Measured variables 141
Output values 144
Overview 60
Process variables 122
Pulse/frequency/switch output 1 to n 145
Relay output 1 to n 145
Reset access code 132
Sensor adjustment 123
Simulation 133
Status input 101
Status input 1 to n 143
System units 94
Totalizer 142
Totalizer 1 to n 124
Totalizer handling 146
Value current output 1 to n 144
Web server 79
WLAN Settings 129
Zero point adjustment 124
Supply voltage 208
Surface roughness 219
Switch output 203
Symbols
For communication 62
For correction 65
For diagnostic behavior 62
For locking 62
For measured variable 62
For measurement channel number 62
For menus 64
For parameters 64
For status signal 62
For submenu 64
For wizard 64
In the status area of the local display 62
In the text and numeric editor 65
System design
Measuring system 199
see Measuring device design
System integration 86
System pressure 25

T

Technical data, overview 199
Temperature range
Ambient temperature range for display 220
Medium temperature 214
Storage temperature 21
Terminal assignment 37
Terminal assignment of connecting cable for Proline 500- digital
Sensor connection housing 39
terminals 209
Tests and certificates 224
Text editor 65
Thermal insulation 25
Tool tip
see Help text
Tools
Electrical connection 34
Installation 28
Transport 21
Totalizer
Configuration 124
Transmitter
Turning the display module 33
Turning the housing 32
Transporting the measuring device 21
Troubleshooting
General 150
Turning the display module 33
Turning the electronics housing
see Turning the transmitter housing
Turning the transmitter housing 32

U

Use of the measuring device
Borderline cases 10
Incorrect use 10
see Designated use
User interface
Current diagnostic event 186
Previous diagnostic event 186
User roles 60

V

Version data for the device 86
Vibration resistance 214
Vibrations 27

W

W@M 193, 194
W@M Device Viewer 16, 194
Weight
SI units 216
Transport (notes) 21
US units 217
Wizard
Current input 100
Current output 102
Define access code 132
Display 116
Low flow cut off 119

Partially filled pipe detection 120
Pulse/frequency/switch output 105, 107, 112
Relay output 1 to n 114
Select medium 97
WLAN settings 129
Workplace safety 11
Write access 72
Write protection
Via access code 136
Via block operation 139
Via write protection switch 137
Write protection switch 137

www.addresses.endress.com

Endress+Hauser

People for Process Automation