ABSA
the pressure equipment safety authority

9410 - 20 Ave N.W.
Edmonton, Alberta, Canada T6N 0A4
Tel: (780) 437-9100 / Fax: (780) 437-7787

August 30, 2014

Attention: Tanya Francis
TECHNICAL STANDARDS & SAFETY AUTHORITY
3300 BLOOR STREET WEST
14 FLOOR CENTRE TOWER
TORONTO, ON M8X 2X4

The design submission, tracking number 2014-05705, originally received on July 14, 2014 was surveyed and accepted for registration as follows:

CRN : 0F16950.52 **Accepted on:** August 30, 2014
Reg Type: New Design **Expiry Date:** June 19, 2024
Drawing No. : LIQUIPHANT TRANSDUCER FTL-OTL31-33 As Noted
Fitting type: TRANSDUCERS

Design registered in the name of : ENDRESS + HAUSER GMBH & CO KG

The registration is conditional on your compliance with the following notes:

This registration is valid only for fittings fabricated at the location(s) covered by the QC certificate attached to the accepted AB-41 Statutory Declaration form. This registration is valid only until the indicated expiry date only if the Manufacturer maintains a valid quality management system approved by an acceptable third-party agency until that date. Should the approval of the quality management system lapse before the expiry date indicated above, this registration shall become void.

This submission has been accepted for registration based review and acceptance of the design under CRN 0F16950.5 by another jurisdiction, in accordance with the Association of Chief Inspectors Policy on Reciprocal Recognition of Design Review for Fitting Design Registration."

An invoice covering survey and registration fees will be forwarded from our Revenue Accounts.

Enclosed are stamped prints for your reference.

Sincerely,

M. Grynchuk

GRYNCHUK, MILLA

AB-41 2005-02

Alberta
MUNICIPAL AFFAIRS

ABSA
the pressure equipment safety authority

STATUTORY DECLARATION
Registration of Fittings

Endress+Hauser
People for Process Automation

I, Michael Frei,

Quality Assurance Manager
(company title, e.g. vice president, plant manager, chief engineer) (must be in a position of authority)

of Endress+Hauser GmbH+Co. KG; Endress + Hauser(Suzhou) Automation Instr. Co. Ltd.; E+H(India); Endress+Hauser (USA) Automation Instrumentation, Inc.
(name of manufacturer)

located at DE-79689 Maulburg, Germany; 215021 Suzhou (P.R. China); Aurangabad - 431136; 2340 Endress Place, Greenwood, IN, 46143 USA
(plant address)

do solemnly declare that the fittings listed hereunder, which are subject to the Safety Codes Act (check one)

☑ comply with the requirements of ASME B31.3 (title of recognized North American Standard) which specifies the dimensions, materials of construction, pressure/temperature ratings and identification marking of the fittings, or

☐ are not covered by the provisions of a recognized North American standard and are therefore manufactured to comply with _____ as supported by the attached data which identifies the dimensions, materials of construction, pressure/temperature ratings and the basis for such ratings, and the marking of the fittings for identification.

I further declare that the manufacture of these fittings is controlled by a quality control program which has been verified by the following authority, SQS as being suitable for the manufacture of these fittings to the stated standard. The fittings covered by this declaration, for which I seek registration, are Category F

In support of this application, the following information, calculations and/or test data are attached:

Technical Description 960016068--; Scope of Registration Summary 960016105--; Drawing 960015905--

DECLARED before me at _____ in the _____ of _____

this _____ day of _____ (Month), _____ (Year)

(print) _____

(sign) _____
(A Commissioner for Oaths)

Michael F
(Signature of Applicant)

For Office Use Only

To the best of my knowledge and belief, the application meets the requirements of the Safety Codes Act and CSA Standard B51, Clause 4.2, and is accepted for registration in Category F

Registration Number: 0F16950.52

RAILLA GRYNCHUK
(For the Administrator/Chief Inspector of Alberta)

Date Registered: AUG 30 2014

Expiry Date: 2024-06-19

The information you provide is necessary only for the administration of the programs as required by the Alberta Safety Codes Act and Regulations in the Boiler Discipline.

1.2.2 Scope of Registration

Table 1.2.2 – Scope of Registration Summary - Notes: Refer to drawing E+H drawing 960015905 - -.

	Process connection (please refer to drawing 960015905--)		Materials of Construction	Maximum Design Pressure (bar) and Temperature (°C)
	Design	**Pressure components**		
LIQUIPHANT	ISO 2852	DN25-38 (1" to 1-1/2"), DN40-51 (2")		25 bar @ -40°C…+150°C
	DIN 11851 Tube connection and slotted nut	DN25, DN32, DN40, DN50		DN25, DN32, DN40: 40 bar @ -40°C…+100°C 25 bar @ -40°C…+140°C DN50: 25 bar @ -40°C…+140°C
	SMS Adapter connection and slotted nut	≤ 1-1/2"		25 bar @ -40°C…+150°C
	E+H proprietary weld adapter	≤ ø65mm	UNS S31603, SA-479, (316L, 1.4435, 1.4404)	25 bar @ -40°C…+150°C
FTL31 FTL33	Varivent	F (DN25), N (DN32-DN162)	UNS S31603, SA-312, (TP316L, 1.4435, 1.4404)	25 bar @ -40°C…+150°C
OTL31 OTL33	Pipe Thread standard DIN/ISO 228	G1/2", G3/4", G1"		40 bar @ -40°C…+150°C
	Pipe Thread standard DIN/ISO 228	G3/4", G1" (including welding boss)		40 bar @ -40°C…+100°C 25 bar @ -40°C…+150°C
	ASME B1.1 DIN/ISO 13	M24 x 1.5		40 bar @ -40°C…+150°C
	ASME B1.20.1-1983 NPT Thread	NPT 1/2", NPT 3/4", NPT 1"		40 bar @ -40°C…+150°C
	DIN EN 10226-1 Thread	Threaded: R 1/2", R3/4", R1"		40 bar @ -40°C…+150°C
	Flush mounted for welding neck 1"	G1" aligned (including welding boss) Rd52 (including welding boss)		40 bar @ -40°C…+100°C 25 bar @ -40°C…+150°C
		Extension Tube	UNS S31603, SA-312, (TP316L, 1.4435, 1.4404) UNS S31603, SA-479, (316L, 1.4435, 1.4404)	40 bar @ -40°C…+150°C
		Fork	MIM-316L (B 883-97)	40 bar @ -40°C…+150°C

THIS IS PART OF CRN 0F16950.5
Technical Standards & Safety Authority
Boilers & Pressure Vessels Safety Division

ABSA
SAFETY CODES ACT - PROVINCE OF ALBERTA
REGISTRATION OF FITTINGS
REGISTRATION NO. 0F16950.52
DWG. NO. or CAT. NO. Scope
TYPE OF FITTINGS Probes
AUG 30 2014 INITIALS
Date
MILLA GRYNCHUK, P.Eng.
DESIGN SURVEY ENGINEER

1.2.3 Material Specifications

Table 1.2.3 Material Specifications and Design Temperatures

Part	Listed Material	Temperature Range
Liquiphant Transducer	UNS S31603, A-479, (316L, 1.4435, 1.4404) UNS S31603, A-312, (TP316L, 1.4435, 1.4404) ASTM B883, MIM-316L	-40 °C to 150°C

Name and Form [1,2]	UNS	Min. Tensile (ksi) [1]	Min. Yield (ksi) [1]	Maximum Allowable Stress (psi) up to 302°F [1]
ASTM B883, MIM-316L	--	65	20	13,300
UNS S31603, A-479, (316L, 1.4435, 1.4404)	S31603	70	25	16,676
UNS S31603, A-312, (TP316L, 1.4435, 1.4404)	S31603	70	25	16,676

NOTES

[1] Per ASME B31.3-2012 table A-1

[2] Alloy types and grades with superior physical and chemical properties permissible.

[3] Note that all E+H alloys are dual listed, and comply to International, European and ASME standards.

THIS IS PART OF
CRN OF16950.5
Technical Standards & Safety Authority
Boilers & Pressure Vessels
Safety Division

OF16950.52

	Process connection		Method qualifying to CSA B51(Please refer to drawing 960015905--) Proof tests results and calculations in Appendix B of this report
	Design	**Pressure components**	
LIQUIPHANT FTL31 FTL33 OTL31 OTL33	ISO 2852	DN25-38 (1..1-1/2"), DN40-51 (2")	o Valid CRN 0F15498.5C o Proof test results witnessed by an authorized inspector per CSA B51 para. 4.2.6 (viii) o Proof test reports: 970004359, 970004360, 970004361 (Appendix B of this report)
	DIN 11851 Tube connection and slotted nut	DN25, DN32, DN40, DN50	o Valid CRN 0F15498.5C o Pressures and temperatures per DIN 11851 published standard. (section 1.5 of report)
	SMS Adapter connection and slotted nut	≤ 1-1/2"	o Valid CRN 0F15498.5C o ASME B31.3 304.7.2 (d) detailed stress analysis (Section 1.8 of this report)
	E+H proprietary weld adapter	≤ ø65mm	o Valid CRN 0F15498.5C o Proof test results witnessed by an authorized inspector - CSA B51 para. 4.2.6 (viii) o Proof test result: 970004363 (Appendix B of this report)
	Varivent	F (DN25), N (DN32-DN162)	o Valid CRN 0F15498.5C o Detailed stress analysis - B31.3 para. 304.7.2 (d) (Section 1.6.1 of this report)
	Pipe Thread standard DIN/ISO 228	G1/2", G3/4", G1"	o Valid CRN 0F15498.5C o Proof test results witnessed by an authorized inspector - CSA B51 para. 4.2.6 (viii) o Proof test reports: 970004356, 970004357 (Appendix B of this report)
	Pipe Thread standard DIN/ISO 228	G3/4", G1" (including welding boss)	o Valid CRN 0F15498.5C o Proof test results witnessed by an authorized inspector per CSA B51 para. 4.2.6 (viii) o Proof test report: 970004358 (Appendix B of this report)
	ASME B1.1 DIN/ISO 13	M24 x 1.5	o Valid CRN 0F15498.5C o Proof test results witnessed by an authorized inspector - CSA B51 para. 4.2.6 (viii) o Proof test report: 970004363 (Appendix B of this report) o ASME B31.3 table 326.1: ASME B1.13M Non-Mandatory Appendix B (Section 1.3.2 and 1.3.3 of this report)
	ASME B1.20.1-1983 NPT Thread	NPT 1/2", NPT 3/4", NPT 1"	o Valid CRN 0F15498.5C o ASME B31.3 paragraph 314.2.1(Section 1.3.1 of this report)
	DIN EN 10226-1 Thread	Threaded: R 1/2", R3/4", R1"	o ASME B31.3 paragraph 314.2. (Section 1.3.1 of this report)
	Flush mounted for welding neck 1"	G1" aligned (including welding boss) Rd52 (including welding boss)	o Valid CRN 0F15498.5C (full version) & 0F11261.5C (Aligned) o Proof test results witnessed by an authorized inspector per CSA B51 para. 4.2.6 (viii) o Proof test report: 970004362, 970004357, 970004361, 970004359, 970004363 (Appendix B of this report)
		Extension Tube	o Proof test results witnessed by an authorized inspector - CSA B51 para. 4.2.6 (viii) o Proof test results: 970004356 (Appendix B of this report)
		Fork	o Proof test results witnessed by an authorized inspector - CSA B51 para. 4.2.6 (viii) o Proof test results: All of the above. (Appendix B of this report)

0F16950.5

0F16950.52

OF169590.52

Thread

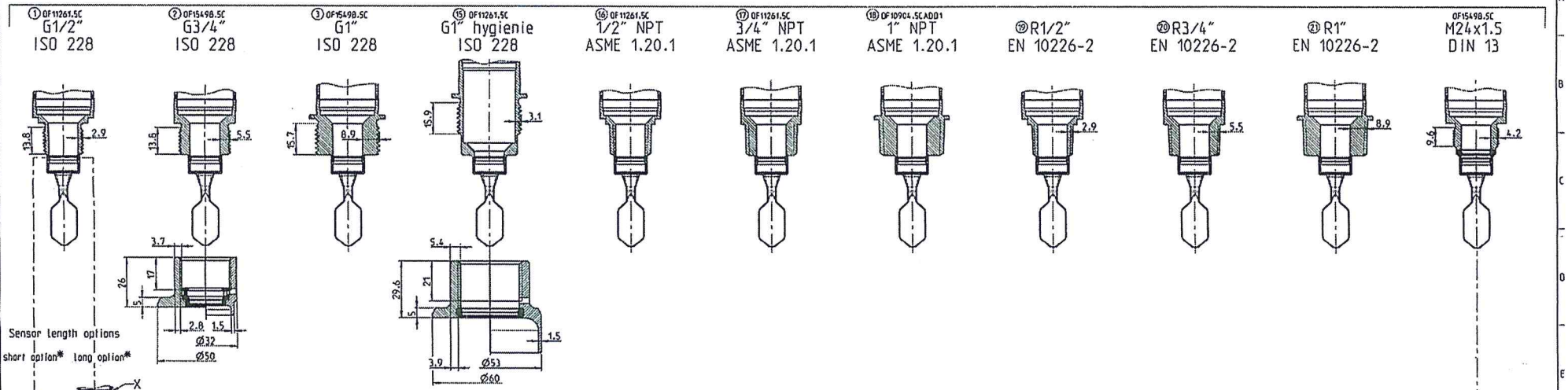

One Piece Sanitary ISO 2852 / ASME BPE DT

One Piece Sanitary connection DIN 11851

Sanitary connection flush mounted DIN 11851

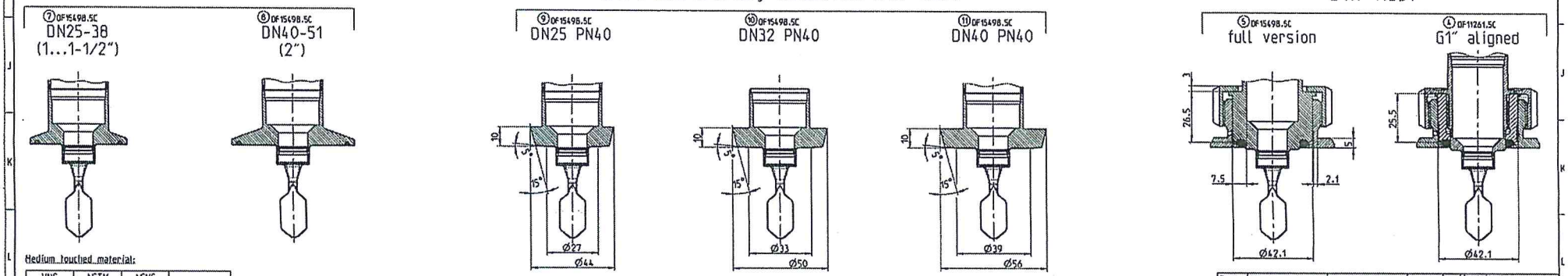

Medium touched material:

UNS	ASTM	ASME	
S31603	A479	SA479	AISI 316L
S31603	A312	SA312	AISI TP 316L
-	B883	-	MIM-316L

Gaskets: EPDM, HNBR, FFKM, FKM Viton, VMQ, PEEK

*R1/2", R3/4", R1" per EN 10226-2
G1/2", G3/4", G1" per ISO 228
1/2" NPT, 3/4" NPT, 1" NPT per ASME 1.20.1

Agency controlled drawing. No changes without prior Agency approval.

Endress+Hauser

Schutzvermerk ISO 16016 | Refer to protection notice ISO 16016

Benennung / title: CRN Liquiphant Transducer
CRN Liquiphant Transducer

1:1

960015905 - -

00000