BA 166F/00/en/07.03
Software Version 1.2
017398-1000

prosonic T with PROFIBUS PA
Ultrasonic Level Measurement

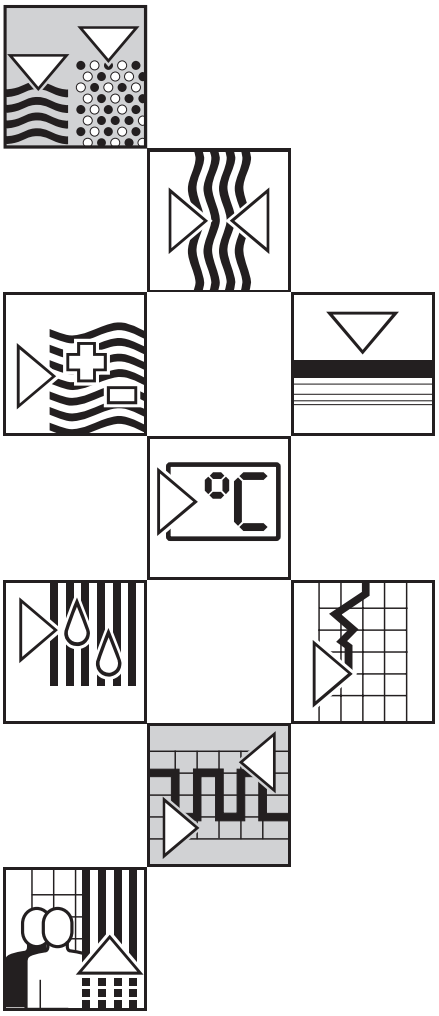

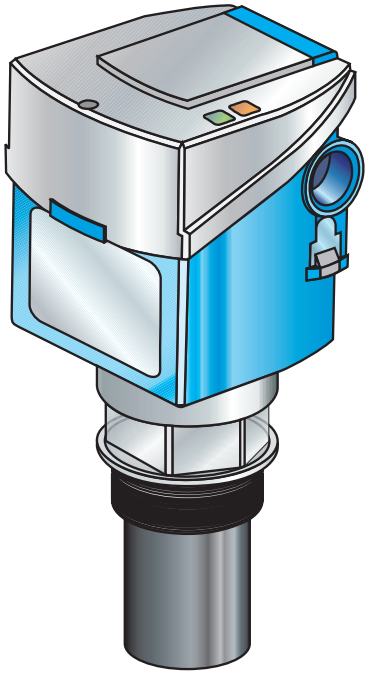

PROFI BUS
PROCESS FIELD BUS ®

Endress+Hauser
Nothing beats know-how

Short instructions

With display or Commu-win II

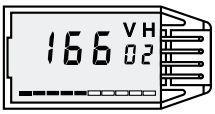

1. Reset instrument V9H5
   – Input: **333**
2. Select length unit V8H2
   – Input: **0:** m
   1: ft

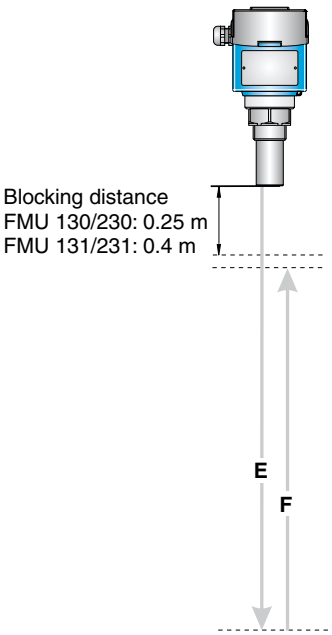

3. Empty calibration V0H1
   – Enter: **E (m/ft)**
4. Full calibration V0H2
   – Enter: **F (m/ft)**
5. Applications V0H3
   – Enter:

0: Liquid

1: Rapid level change

2: Liquid / dome cover

3: Bulk solids

4: Conveyor belt

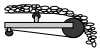

Table of Contents

see opposite page, Short Instructions

Version/Date	Revision	Significance
1.0 / 08.97	Original software for test devices	
1.2 / 09.98	Optimisation of functionality FMU 232 added	- No influence on operation - Data transfer between versions not possible

Notes on Safety

Approved usage

The Prosonic T is a top-mounted, compact level transmitter with PROFIBUS-PA protocol for the measurement of liquids and bulk solids. It operates on the ultrasonic principle.

Installation, commissioning, operation

The Prosonic T has been designed to operate safely in accordance with current technical, safety and EU standards. If installed incorrectly or used for applications for which it is not intended, however, it is possible that application-related dangers may arise, e.g. product overflow due to incorrect installation or calibration. For this reason, the instrument must be installed, connected, operated and maintained according to the instructions in this manual: personnel must be authorised and suitably qualified. The manual must have been read and understood, and the instructions followed. Modifications and repairs to the device are permissible only when they are expressly approved in the manual.

Explosion hazardous areas

If the device is to be installed in an explosion hazardous area, then the specifications in the certificate as well as all national and local regulations must be observed. The instrument can be delivered with the certificates listed in the table below. The certificate can be identified from the first letter of the order code stamped on the nameplate.

- Ensure that all personnel are suitably qualified
- Observe the specifications in the certificate as well as national and local regulations.

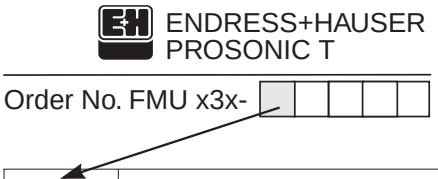

Code	Certificate	Explosion protection
A	none	none
B	ATEX II 2 G	EEx ia IIC, s. XA 008F-A
J	FM	Class I, Div. 1, Groups A-D
M	FM	Class II, Div. 1, Groups E-G
S	CSA	Class I, Div. 1, Groups A-D
R	CSA	Class II, Div. 1, Groups E-G
N	CSA	General Purpose
F	ATEX II 1/3 D	IP67 T 108 °C, s. XA 035F-A
T	TIIS	Ex ia IIC T6

Table S.1
Certificates for applications in hazardous areas (in preparation)

Safety conventions

In order to highlight safety-relevant or alternative operating procedures in the manual, the following conventions have been used, each indicated by a corresponding icon in the margin.

Safety conventions

Symbol	Meaning
Hinweis!	**Note!** A note highlights actions or procedures which, if not performed correctly, may indirectly affect operation or may lead to an instrument response which is not planned
Achtung!	**Caution!** Caution highlights actions or procedures which, if not performed correctly, may lead to personal injury or incorrect functioning of the instrument
Warnung!	**Warning!** A warning highlights actions or procedures which, if not performed correctly, will lead to personal injury, a safety hazard or destruction of the instrument

Explosion protection

	Device certified for use in explosion hazardous area If the device has this symbol embossed on its name plate it can be installed in an explosion hazardous area
	Explosion hazardous area Symbol used in drawings to indicate explosion hazardous areas. Devices located in and wiring entering areas with the designation “explosion hazardous areas” must conform with the stated type of protection
	Safe area (non-explosion hazardous area) Symbol used in drawings to indicate, if necessary, non-explosion hazardous areas. Devices located in safe areas stiill require a certificate if their outputs run into explosion hazardous areas.

Electrical symbols

	Direct voltage A terminal to which or from which a direct current or voltage may be applied or supplied
	Alternating voltage A terminal to which or from which an alternating (sine-wave) current or voltage may be applied or supplied
	Grounded terminal A grounded terminal, which as far as the operator is concerned, is already grounded by means of an earth grounding system
	Protective grounding (earth) terminal A terminal which must be connected to earth ground prior to making any other connection to the equipment
	Equipotential connection (earth bonding) A connection made to the plant grounding system which may be of type e.g. neutral star or equipotential line according to national or company practice

1 Introduction

Application

The Prosonic T is a compact ultrasonic transmitter for continuous non-contact level measurement in liquids and in coarse-grained or pelleted solids (from 4 mm/0.16 in). It has an integrated temperature sensor for time-of-flight compensation.

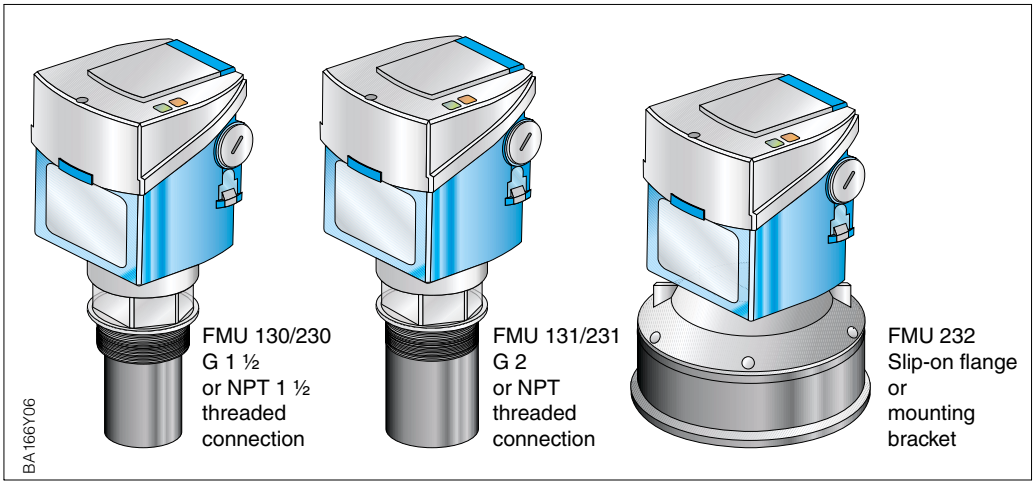

Fig. 1.1
Prosonic T

Versions

Fife Prosonic T transmitters with Profibus PA protocol are available:

Type	Process connection	Range in liquids	Range in solids
FMU 130/230	1 1/2"	0.25...4 m	0.25...2 m
FMU 131/231	2"	0.4...7 m	0.4...3.5 m
FMU 232	–	0.6…15 m	0.6…7 m

Measurement principle

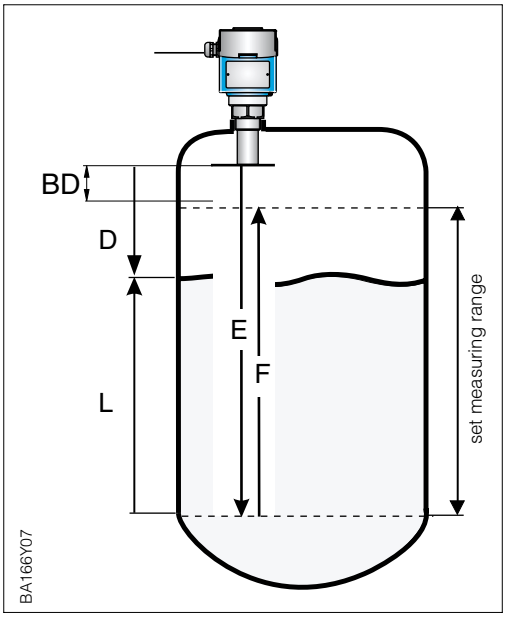

Fig. 1.2
Measuring principle and signal processing of Prosonic T

An ultrasonic emitter (sensor) mounted above the product is electrically excited and directs an ultrasonic pulse through the air towards the product. This pulse is reflected back from the surface of the product. The echoes are detected by the same sensor, now acting as a receiver, and converted back into an electrical signal. The time taken between transmission and reception of the pulse – the *time-of-flight* – is directly proportional to the distance between the sensor and the product surface.

$$D = \nu \bullet t/2,$$

whereby ν = velocity of sound.

Since the empty distance E is known to the system, it is a simple matter to calculate the level L.

$$L = E - D$$

The parameter F defines the set measuring range. BD is the blocking distance, within which measurements are not possible

1.1 Measuring System

In the simplest case, the complete measuring system comprises a Prosonic T transmitter, a bus coupler, a PLC or personal computer with the operating program Commuwin II as well as a PROFIBUS-PA terminator (RC combination).

The maximum number of transmitters on a bus segment is determined by their current consumption, the power of the bus coupler and the required bus length, see TI 260F/00/en. Normally, however:

- 8 Prosonic T for EEx ia applications
- max. 32 Prosonic T for non-hazardous applications

can be operated on a bus segment.

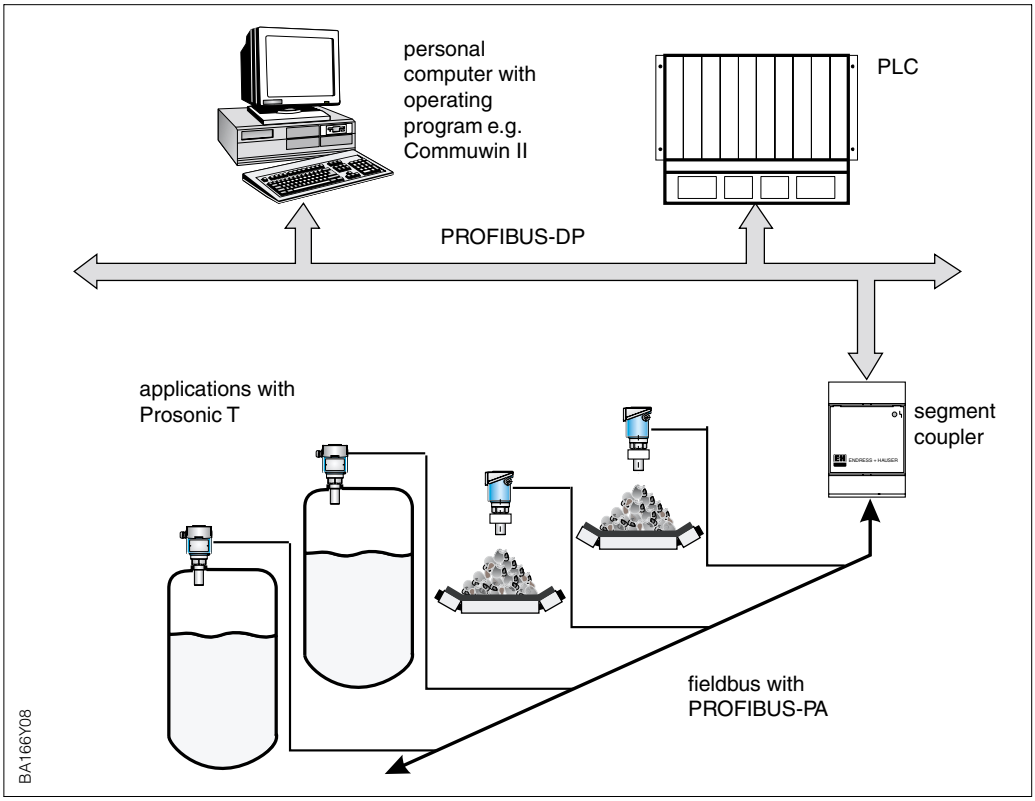

Fig. 1.3
Measuring system Prosonic T with PROFIBUS-PA protocol

1.2 Technical data

General specifications

Manufacturer	Endress+Hauser
Instrument designation	Prosonic T FMU 130, FMU 131, FMU 230, FMU 231 and FMU 232

Input

Measured variable	Level from the time-of-flight of an ultrasonic pulse
Measuring range	Type / in liquids / in solids FMU 130/230 / 0.25...4 m / 0.25... 2 m FMU 131/231 / 0.4... 7 m / 0.4...3.5 m FMU 232 / 0.6…15 m / 0.6… 7 m

Output

Output signal	Digital communication signal, PROFIBUS-PA
PA function	Slave
Transmission rate	31.25 kByte/s
Response time	Slave: approx. 20 ms PLC: approx. 600 ms for approx. 30 devices
Signal on alarm	PA-signal: status bit set, measured value as read Display: selectable –9999, +9999 or hold (last value)
Output damping	0…255 s, Factory setting: depends on application parameter
Bus terminator	none, separate PROFIBUS-PA terminator
Physical layer	IEC 1158-2

Accuracy

Reference conditions	Ideal reflection from a calm flat surface at 20 °C
Measured error	0.25 % for max. measuring span
Resolution	3 mm

Operating conditions

Medium temperature range	–40…+80 °C, for Ex devices see certificate
Ambient temperature	–20…+60 °C, for Ex devices see certificate
Storage temperature range	–40…+80 °C
Operating pressure p_{abs}	3 bar (check with Endress+Hauser for higher pressures and temperatures)
Orientation	As perpendicular to the surface of the material as possible, aligned for fine-grained bulk solids
Climatic class	IEC 68 T2-30Db
Ingress protection	IP 67 (NEMA 6), with housing cover open IP 20
Vibration resistance	IEC 68 T2-6 Tab. 2.C (10...55 HZ)
Electromagnetic compatibility	Interference emission to EN 50 081–2, interference immunity to EN 50 082–2 and industrial standard NAMUR at 10 V/m
Explosion protection	See Notes on Safety

Mechanical contruction

Material	Housing: PBT, threaded boss: PVDF, Sensor: PVDF
Process connection	FMU 130/230: G 1 ½ or NPT 1 ½, FMU 131/231: G 2 or NPT 2
Dimensions	See page 8 and 9

User interface

Display	Optional 4 digit LC plug-in display, with segmented bar chart
LEDs	Red: indicates alarm or warning Green: indicates entry registration or communication in progress
On-site operation	Via four keys –, +, V, H
Remote operation	Via PROFIBUS PA with e.g. operating program Commuwin II
Communication interface	PROFIBUS-PA

Power

Supply voltage	Non-hazardous areas 9…32 VDC, hazardous areas 9…24 VDC
Current consumption	FMU 130/131/230/231: 12 mA ±1 mA, FMU 232: 16 mA ±1 mA, for Ex devices see certificate
Start-up current	Corresponds to Table 4, IEC 1158-2

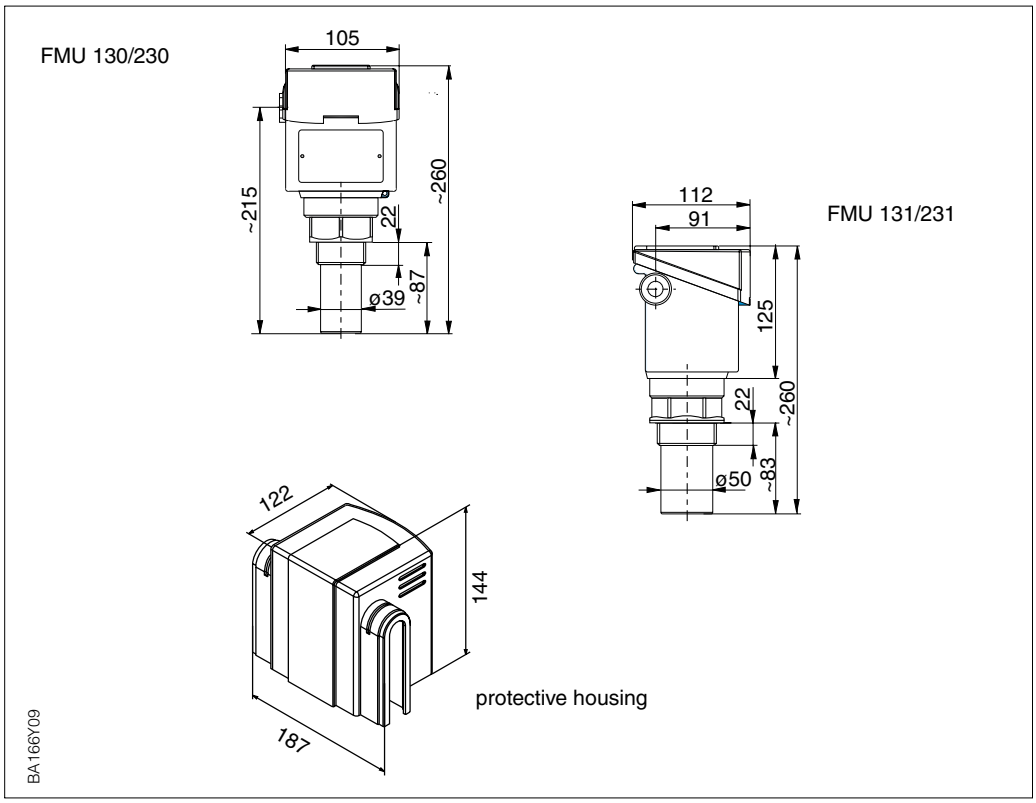

Fig. 1.4
Dimensions in mm of Prosonic T
FMU 130, 131, 230, 231
and protective housing
1" = 25.4 mm

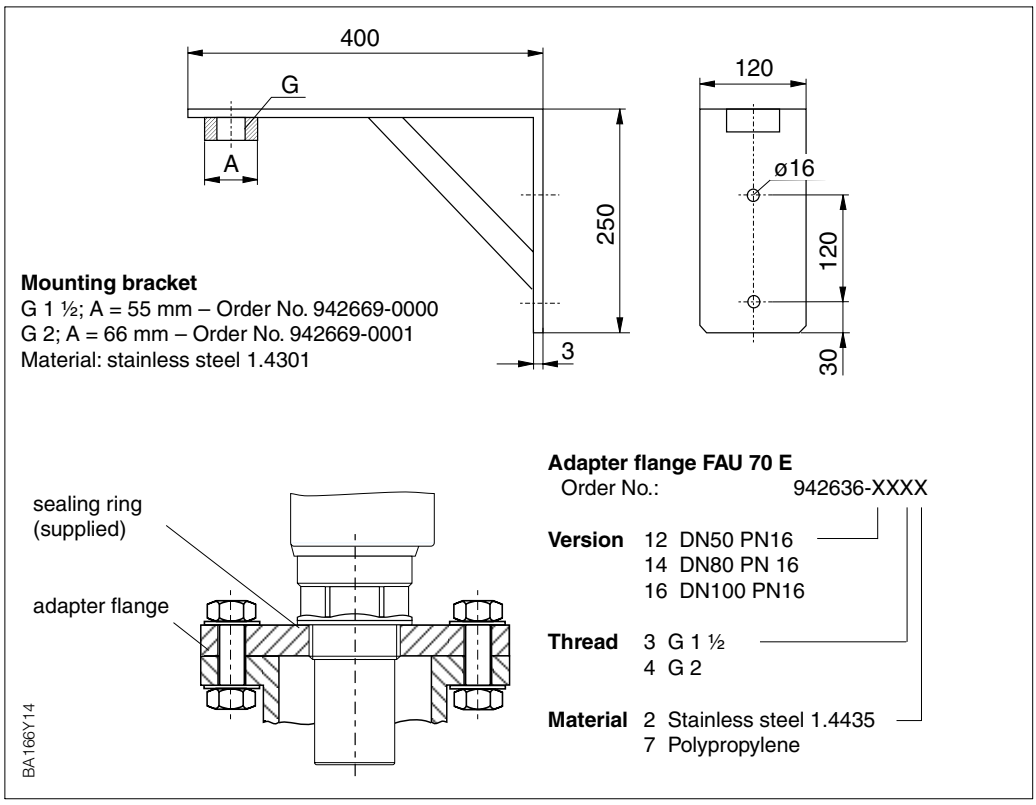

Fig. 1.5
Mounting accessories for
Prosonic T
FMU 130, 132, 230, 231,
dimensions in mm

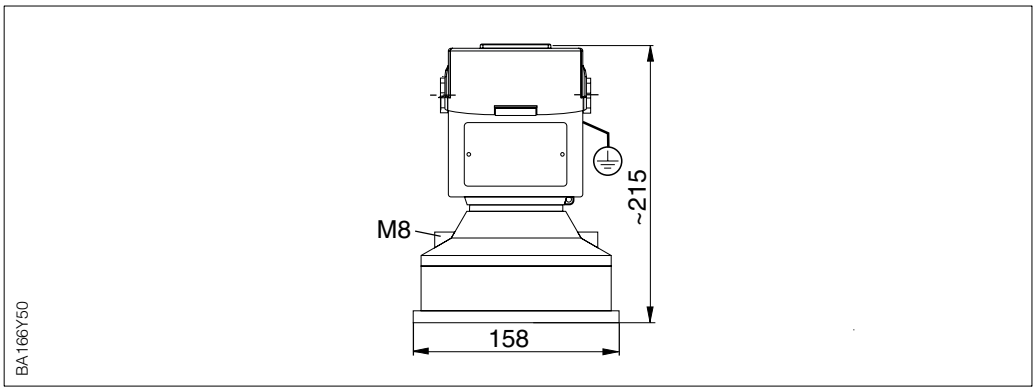

Fig. 1.6
Dimensions
Prosonic T FMU 232

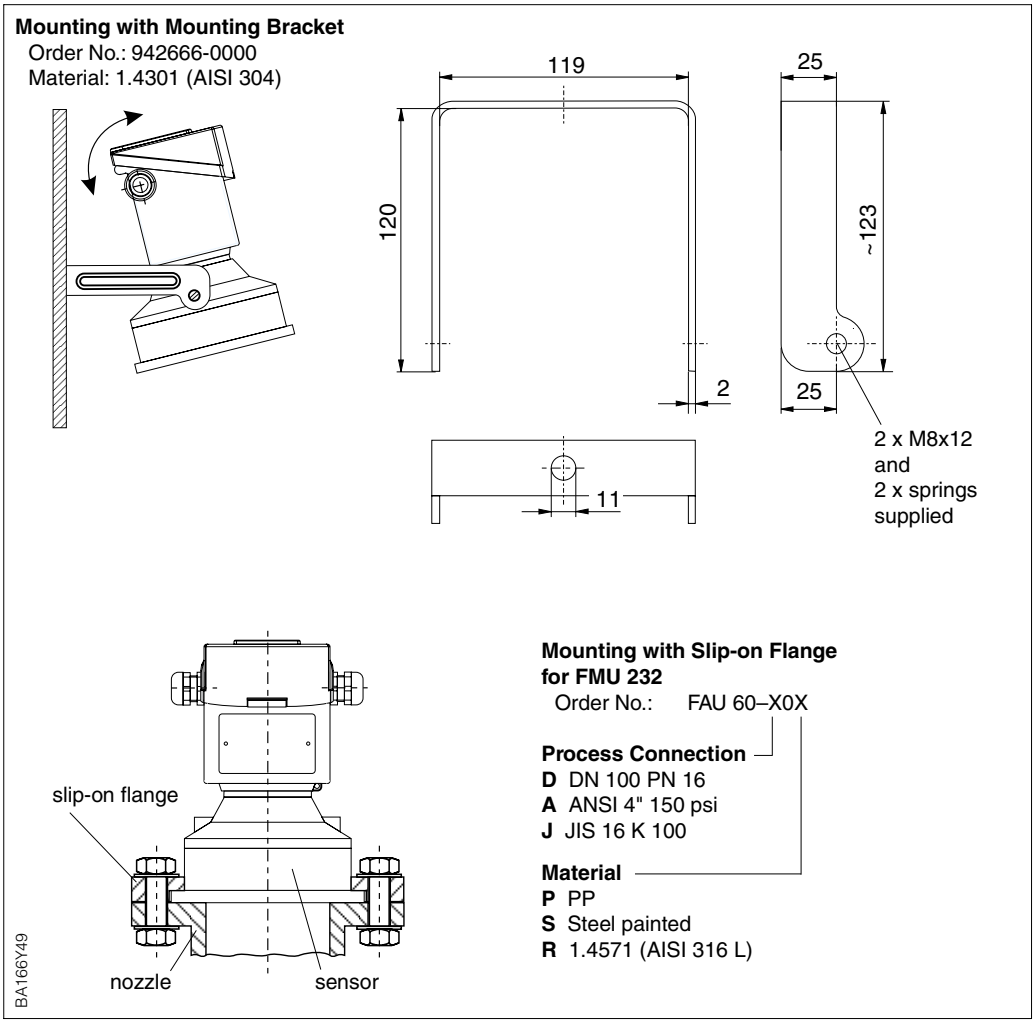

Fig. 1.7
Mounting accessories
Prosonic T FMU 232

1.3 Dimensions Prosonic T

2 Installation

2.1 Installation hints

Operating conditions

The ambient temperature at the sensor housing may not exceed +60 °C.

- For exposed or sunny locations a protective hood is recommended.

The temperature of the process may not exceed +80 °C. The pressure may not exceed 3 bar.

Position

Due to the ringing time of the sensor, there is a zone immediately below it in which returning echoes cannot be detected. This so-called blocking distance BD gives the minimum distance between the sensor and the maximum level in the tank.

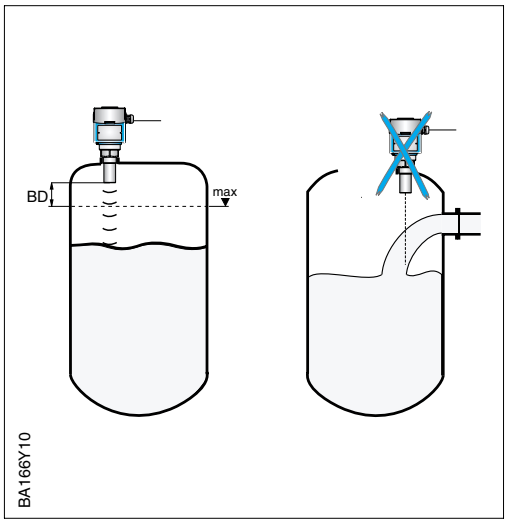

- Mount the sensor such that the distance between it and the maximum product level exceeds the blocking distance. The lower edge of the transmitter should, however, project below the roof of the tank or silo (Exception: mounting in a nozzle).
- Install the transmitter at right angles to the surface of the material.
- Do not measure through the filling curtain.
- In domed tanks, avoid a central position
- Avoid having fittings divedly below the mounting point.

Housing

Prepare the housing as follows:

- Cable entry Pg 16,
- Cable diameter 5…9 mm (0.2…0.35 in)
- Sleeves for connection thread G ½; ½ NPT or M 20x1.5 supplied.

After mounting, the housing can be turned to facilitate wiring.

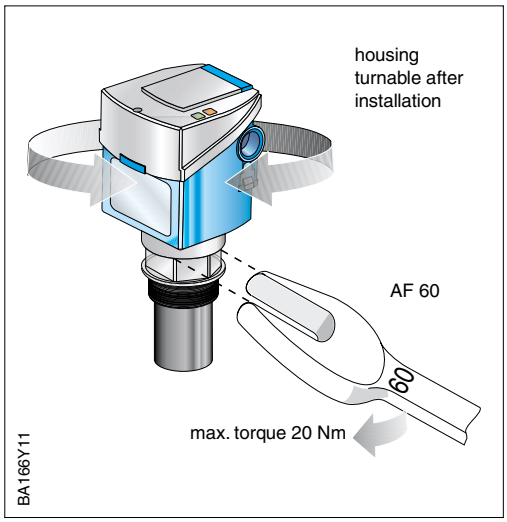


Caution!

Caution!
Always use the hexagonal nut to screw in the Prosonic T: torque 15...20 Nm.

2.2 Mounting

There are several methods of mounting the Prosonic T FMU 130/131/230/231:

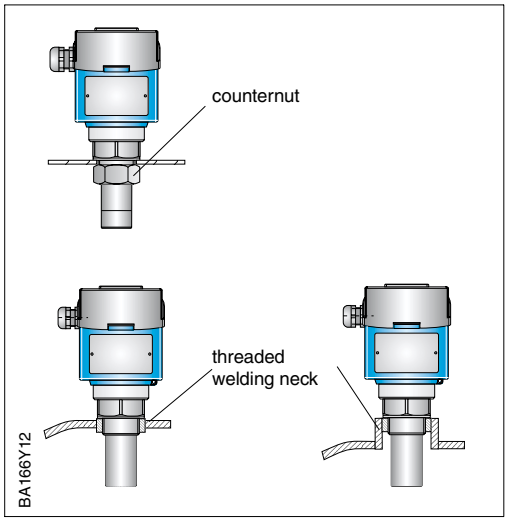

Counternut or welded sleeve

Thread versions:

- Prosonic T FMU 130: G 1½ or 1½ NPT
- Prosonic T FMU 131: G 2 or 2 NPT

Caution!

- Always use the hexagonal nut to screw in the Prosonic T: torque 15...20 Nm.

Caution!

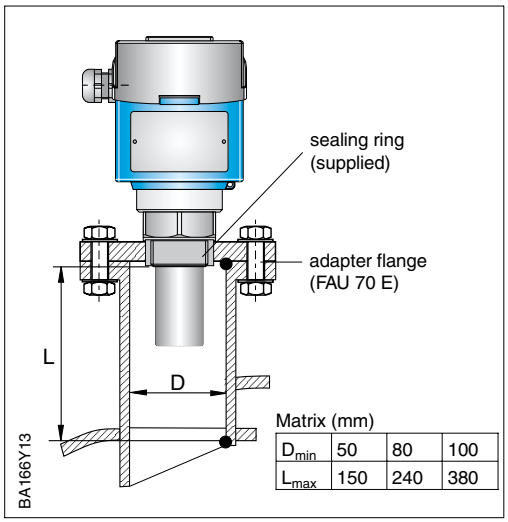

Matrix (mm)

D_{min}	50	80	100
L_{max}	150	240	380

Nozzle and adapter flange

If the maximum level to be measured falls within the blocking distance, the transmitter must be mounted on a nozzle using an adapter flange.

- No condensate or build-up should form in the nozzle.
- The recommend nozzle dimensions are limits, within which the nozzle can vary. *Select as big a nozzle diameter as possible, but keep the height as small as possible.*
- The inner surface of the nozzle should be as smooth as possible (no edges or welding seams).
- Interference echoes caused by the nozzle must be suppressed by the fixed »target suppression« function, page 31.

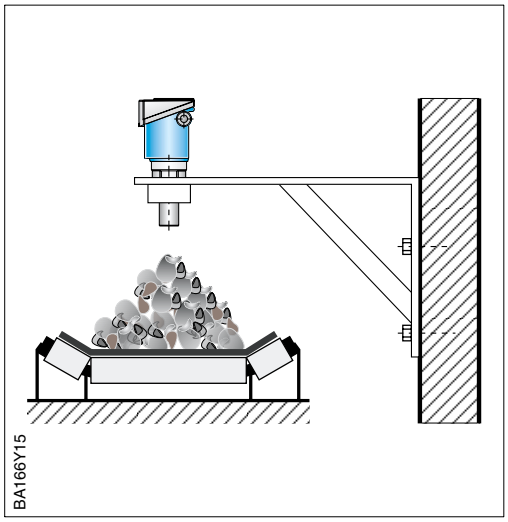

Mounting bracket

The mounting bracket can be used on open tanks or above conveyor belts. The sensor is screwed into the socket provided.

Caution!

- Always use the hexagonal nut to screw in the Prosonic T: torque 15...20 Nm.

Caution!

The Prosonic T FMU 232 can be mounted with slip-on flange or mounting bracket.

Slip-on flange

If the maximum level to be measured falls within the blocking distance, the transmitter must be mounted on a nozzle using an adapter flange.

- No condensate or build-up should form in the nozzle.
- The recommend nozzle dimensions are limits, within which the nozzle can vary. *Select as big a nozzle diameter as possible, but keep the height as small as possible.*
- The inner surface of the nozzle should be as smooth as possible (no edges or welding seams).
- Interference echoes caused by the nozzle must be suppressed by the fixed »target suppression« function, page 31.

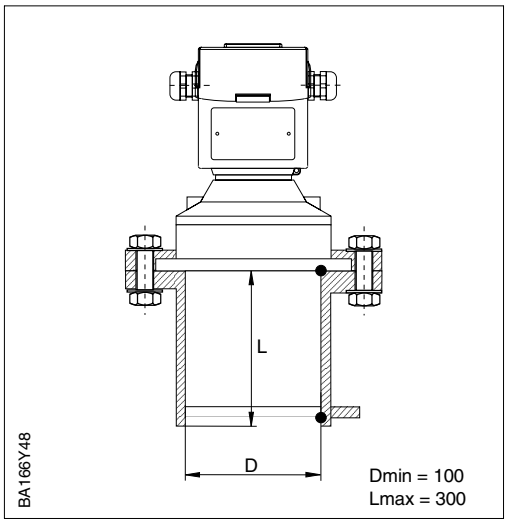

Mounting bracket

The mounting bracket can be used for open tanks or silos

- For liquids and coarse-grained solids align the sensor perpendicular to the product surface
- The mounting bracket cannot be used in Dust-Ex applications

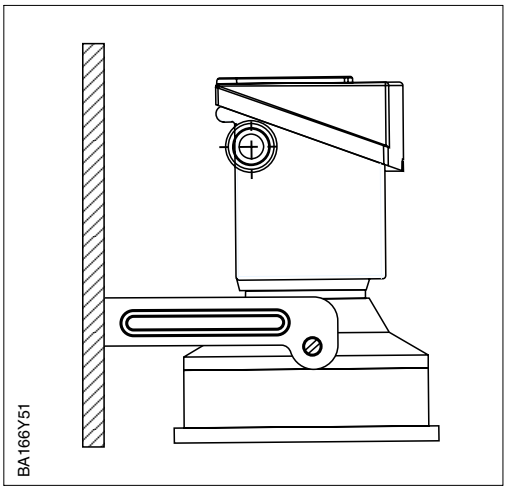

Fine-grained bulk solids

For fine-grained solids, the sensor must be aligned with the product surface

- Align such that the Echo quality V3H2 is at a maximum for bulk solid full and empty conditions

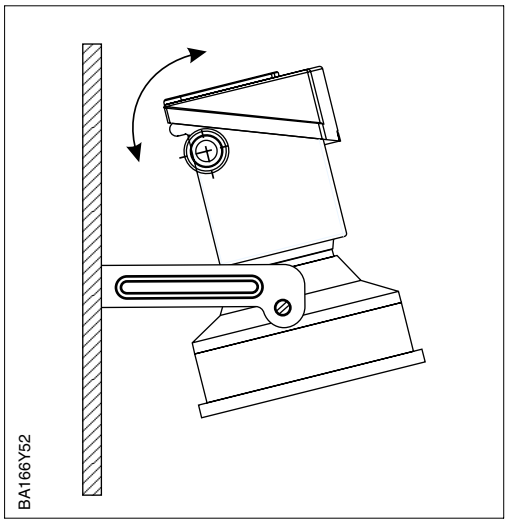

2.3 Connection

Bus cable

For new installations a cable comprising screened, twisted pairs is recommended. The following specifications must be met for explosion-hazardous applications (EN 50 020, FISCO model):

- Loop resistance (DC) 15...150 Ω /km. specific inductance 0.4...1 mH/km, specific capacitance 80...200 nF/km
  e.g. Siemens 6XV1 830-5AH10 (blue)
- None hazardous areas, e.g. Kerpen CEL-PE/OSCR/PVC/FRLA FB-02YS(ST)YFL, Belden 3076F, Siemens 6XV1 830-5BH10 (black)

Information on the structure and grounding of the network are given in TI260/00/en "Planning Hints, PROFIBUS PA" and the PROFIBUS PA specification.

Cable connection

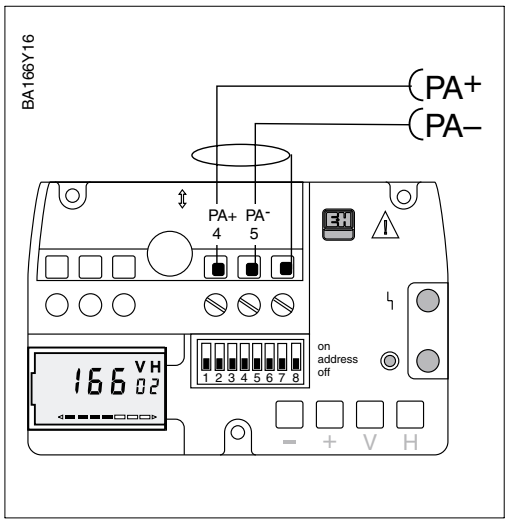

The bus line also carries the power and is connected as follows:

- Unscrew the retaining screw and raise the housing cover
- Thread cable through cable entry
- Connect cable cores to PA+ und PA– . Reversed polarity has no effect on operation
- Connect the screen to the third terminal (this is *not* grounded)
- If necessary, connect the screen to the plant grounding system at the T-box.

Caution!

- The multiple grounding of the bus cable in explosion hazardous areas is permissible only under specific conditions, see TI 260F or IEC 79-14.

Bus address

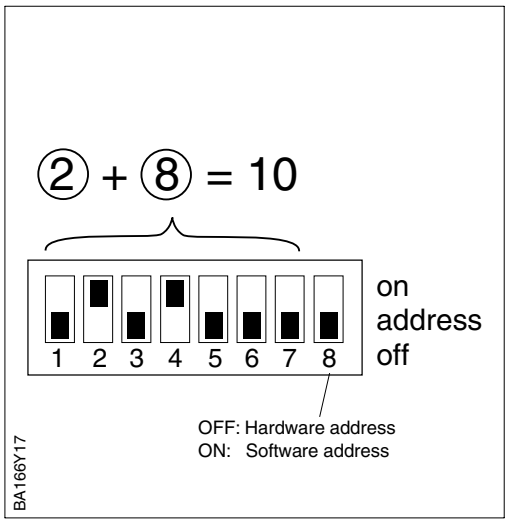

Every device is given a unique bus address. Normally, the bus address is set at a DIP-switch on the device.

- Set address (0...126) at switches 1...7
- Set switch 8 to OFF
  Address = address at switch
  – ON: address = software address
- Switch device off and on to register the change in address.

After connecting the bus cable and setting the address, close and screw down the cover.

2.4 Device parameter file/type file

A diskette with the device data base .DDB is delivered with every device type. The files must be loaded into the communications partner during the commissioning of the system.

The diskette also contains a so-called TYP file for specific Siemens host system configuration tools, e.g. COM ET 200 or COM PROFIBUS. For these tools, the files should be stored as follows:

- all files with extender *.200 in the type file directory, e.g. ***\TYPDAT5X
- all files with extender *.GSD in the data parameter file directory, e.g. ***\GSD
- all files with extender *.BMP in the bit maps directory, e.g. ***\BITMAPS.

The significance of the individual parameters is described in the PROFIBUS-PA specification.

3 Operation

3.1 On-site operation

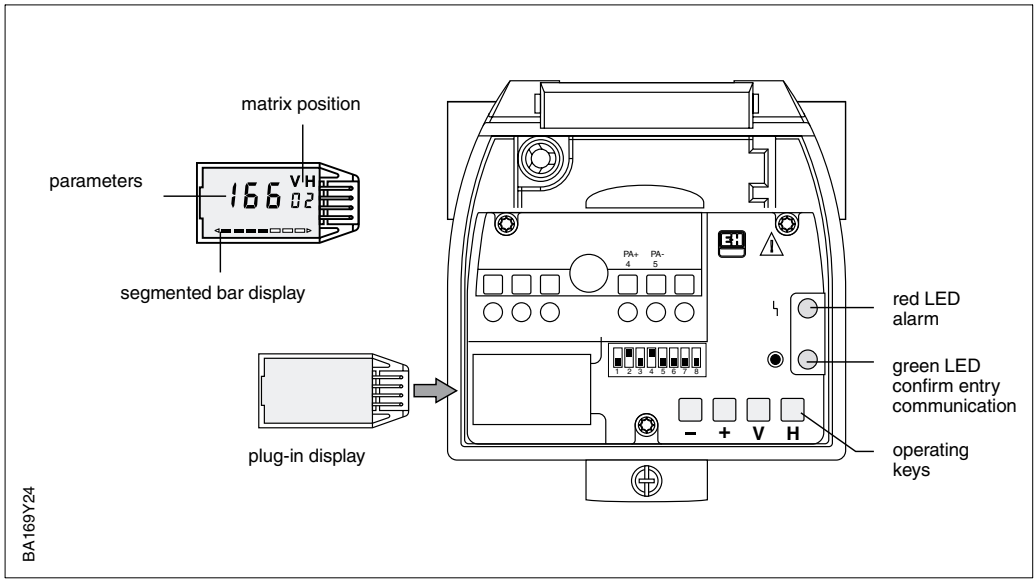

Fig. 3.1
Operating elements of the Prosonic T

The operating elements are located within the transmitter housing and can be operated when the cover is open. The Prosonic T has four keys and two LEDs; the display is optional.

- The LEDs indicate the transmitter status:
  - The green LED lights breifly flashes when the keys are pressed and flashes continuously when communication is in progress.
  - The red LED lights on a transmitter fault and flashes on a warning.
  - Both LEDs are visible when the housing cover is closed.
- The function of the keys depends on whether the display is present or not.

Operation without display

A device without display cannot be operated by the keys alone. Their function is only:

- to trigger a reset to factory settings
- to lock and unlock the configuration mode.

The device must be configured via communication (Commuwin II or PROFIBUS-PA)

Keys – + V H	Function
■ □ ■ □	Reset to factory settings
□ ■ ■ □	Locking of parameter entry
■ □ □ ■	Unlocking of parameter entry

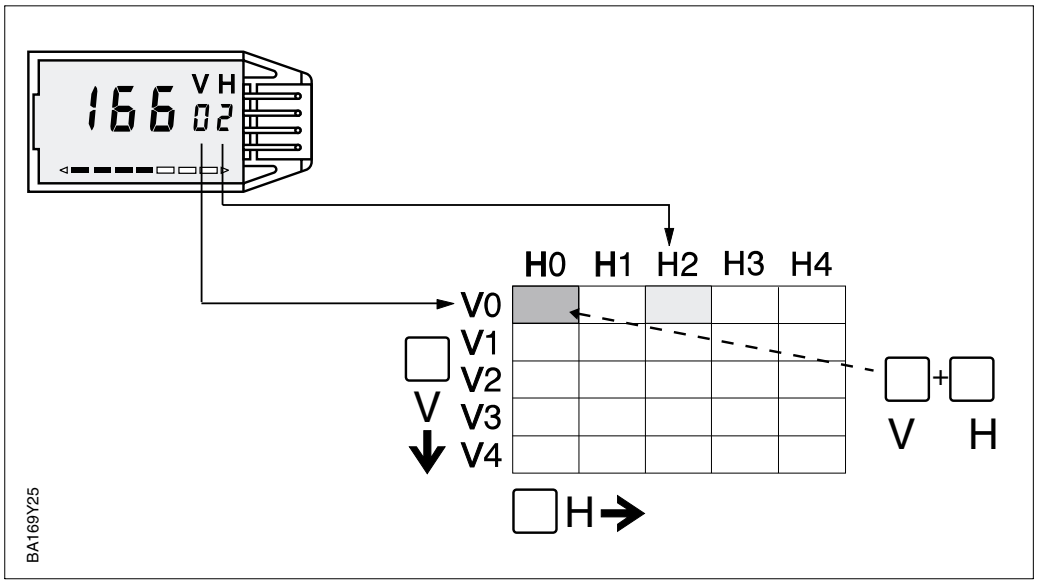

Fig. 3.2
Matrix operation with plugged in display

Operation with display

When the display is plugged in, the full functionality of the Prosonic T can be accessed via a 10 x 10 matrix:

- Each row is allocated to a particular function, e.g. basic calibration,
- Each field sets or displays one parameter.

The same matrix is used for remote and on-site operation with display. Operation is described in Chapter 5, the full matrix is to be found in Chapter 9.

The table below lists the key functions when the display is in place.

Keys	Function
Selection of matrix field	
V	Selection of vertical matrix position
H	Selection of horizontal matrix position
V and H	When V and H are pressed simultaneously the display springs to V0H0
Parameter entry	
+ or –	Activates selected matrix position. The selected digit flashes.
+	Changes the value of the flashing digit by +1
–	Changes the value of the flashing digit by –1
+ and –	Sets the parameter just entered back to its original value, provided it has not already been registered
Registration of the entry	
V or H or V and H	Registration of the entry and quitting of the matrix field Registration of entry and jump to field V0H0
+ and V or – and H	**+** and V lock entries, **–** and H unlock entries, see Section 5.4

3.2 Remote operation with Commuwin II

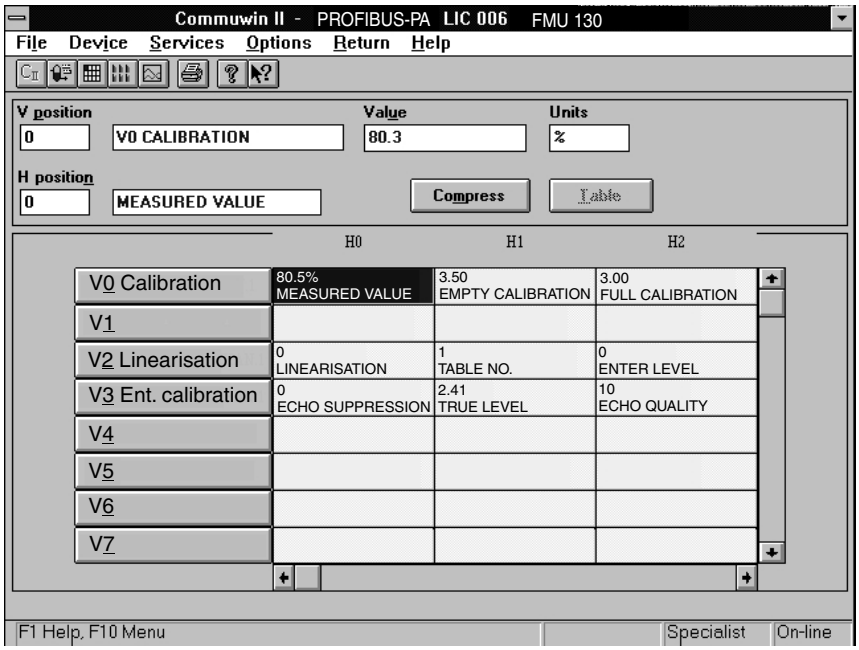

Fig. 3.3
Parameter matrix menu in Commuwin II

PROFIBUS-PA devices can be operated with Commuwin II operating program versions from 1.5 upwards. A full description of Commuwin II is to be found in operating instructions BA 124F. The transmitter is configured either via the operating matrix (see Fig. 3.3) or the graphic interface (Fig. 3.4).

Open connection

Remote operation requires the installation of the PROFIBUS-PA server and the personal computer requires a PROFIBUS-DP card.

- The connection in Commuwin II is made via the PROFIBUS-PA server
- All devices on the relevant segment appear in the live list.
- The transmitter configuration is entered in the device menu
- PROFIBUS-PA profile parameters can be viewed and set under the graphic interface

Note!

- Prosonic T transmitters can also be configured on site via the keys. If the keys have been used to lock configuration, the transmitter cannot be remotely configured, but the parameters can be displayed.

Note!

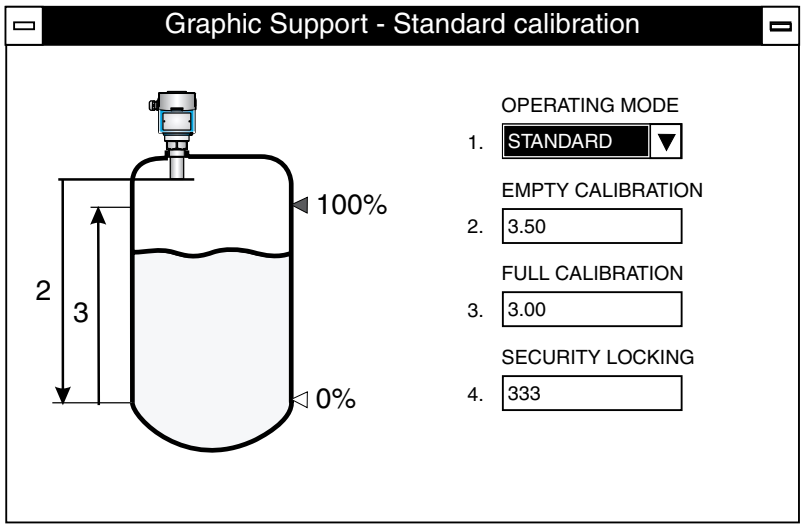

Fig. 3.4
Graphic support menu in Commuwin II

3.3 Data acquisition via PLC

A so-called profile exists for the operation via programmable logic controller:

This contains:

- mandatory parameters, with which the basic parameters of the device can be read or configured.
- application parameters, which allow a calibration and, e.g., additional functions such as a linearisation to be performed.

Prosonic T (DPV1) provides the measured value in the cyclic service according to the PROFIBUS PA protocol , see below.

Data format OUT

Byte	Data	Data format
1	Measured value	IEEE 754 floating point number
2	Measured value	
3	Measured value	
4	Measured value	
5	Device status	80_{HEX} = Device OK $0C_{HEX}$ = Bad error corresponds to alarm, see page 24 40_{HEX} = Uncertain OK target mode switched to manual

IEEE 754 float

D15	D14	D13	D12	D11	D10	D9	D8	D7	D6	D5	D4	D3	D2	D1	D0
Sign	Exponent (E)								Fraction (F)						
	2^7	2^6	2^5	2^4	2^3	2^2	2^1	2^0	2^{-1}	2^{-2}	2^{-3}	2^{-4}	2^{-5}	2^{-6}	2^{-7}
Fraction (F)															
2^{-8}	2^{-9}	2^{-10}	2^{-11}	2^{-12}	2^{-13}	2^{-14}	2^{-15}	2^{-16}	2^{-17}	2^{-18}	2^{-19}	2^{-20}	2^{-21}	2^{-22}	2^{-23}

Measured value (decimal) = $(-1)^{sign} * 2^{(exponent\ -127)} * (1 + fraction)$

Other profile parameters can be accessed acyclically. A list is to be found in Chapter 7.

4 Calibration with Display/Remote Calibration

The chapter describes the basic calibration and other functions that can be set via the operating matrix. The matrix can be accessed via:

- the display module (plugged in) and keys
- the operating program Commuwin II.

The procedures in the chapter describe matrix operation using the keys. When configured from Commuwin II, the values are registered ENTER is pressed

4.1 Basic calibration

The Prosonic T is calibrated by entering the empty distance E and full distance F in the selected length units as well as an application parameter A:

Parameter A	Application
0	Liquids, including automatic stirrer suppression function
1	Rapid level changes
2	Liquids in tanks with domed cover. Includes automatic stirrer suppression function. The maximum first echo recognition factor is set as default to combat multiple echoes
3	Coarse solids (grain-size greater than 4 mm)
4	Conveyor belts

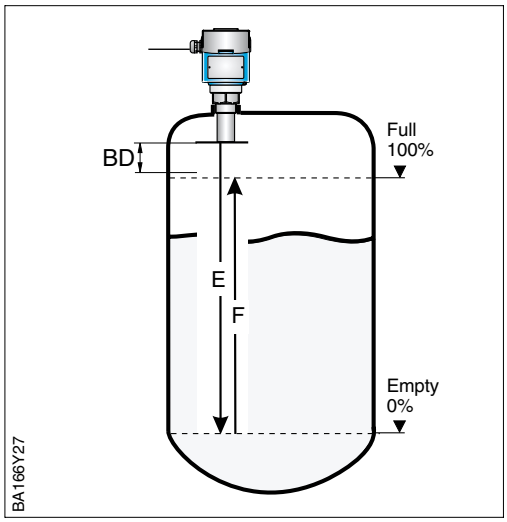

Procedure

#	VH	Entry		Remarks
1	V9H5	333	**VH**	Reset
2	V8H2	0/1	**VH**	Length unit 0: metres 1: feet
3	V0H1	E m/ft	**H**	Empty distance
4	V0H2	F m/ft	**H**	Full distance
5	V0H3	A e.g. 1	**VH**	Application parameter
6	V0H0 V0H8 V0H9	XXXX		Measured value % Distance in m/ft Level in m/ft

Result
- Empty E = 0%
- Full F = 100%

Note!
- If the Prosonic T is mounted in a nozzle or there are fittings in the tanks below the sensor, then it is recommended that the fixed target suppression function is activated at this point, see page 27.


Note!

4.2 Linearisation

Linearisation mode

A linearisation allows the measured value at V0H0 to be output in technical units, i.e. metres, feet, hectolitres, gallons, tonnes etc. The table below summarises the entry modes available for the linearisation function.

Entry V2H0	Linearisation mode	Significance
0	Level	Linear display of level in m or ft.
2	Manual entry	Max. 11 pairs of values, level and volume, are entered as the linearisation curve.
3	Semi-automatic entry	In the case of semi-automatic entry, the tank is filled or emptied in stages. The Prosonic T automatically displays the level, the associated volume is entered manually.
5	Linear relationship	Factory setting. The relationship between the technical units and % level is linear, e.g. level expressed metres or standing cylinder. The measured value is output in the technical units chosen by the user.
In addition, V2H0 offers the functions:		
1	Activate table	The entered linearisation table only comes into effect after it has been activated.
4	Delete table	Before a new linearisation table is entered, any previously active table must be deleted. On deletion the linearisation mode is automatically set to linear.

Warnings

During entry of the linearisation curve, the fault indicator appears in the display and the alarm LED flashes.

Code	Type	Significance
E605	Alarm	The manual linearisation table is incomplete. This error messsage disappears after the linearisation curve has been activated.

After the curve has been entered, it is checked for plausibility.The following warnings can appear:

Code	Type	Significance
E602	Warning	The linearisation curve does not rise continuously. The number of the last valid pair automatically appears in V2H1. All value pairs from this number onwards must be re-entered.
E604	Warning	The linearisation curve comprises less than two value pairs. Enter more value pairs.

De-activation

A linearisation table can be de-activated by entering 0 or 5 in V2H0. Entering 4 in V2H0 causes the entire table to be deleted. In both cases the value in V0H6 (barchart upper range-limit/PV_SCALE) should be re-entered.

Linear relationship

If tank volume or weight is directly proportional to level within the set measuring range, the measured value can be output in technical units by entering the “full” value in V2H5.

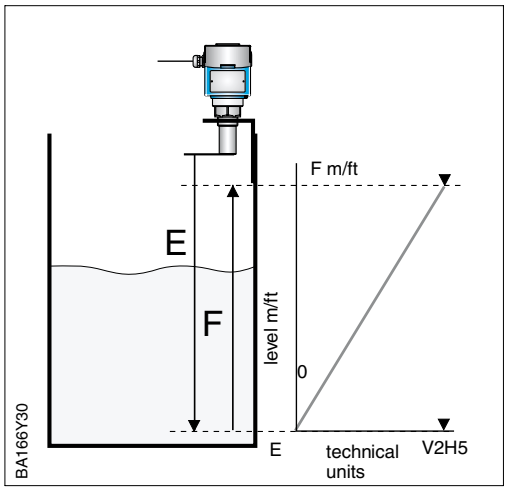

#	VH	Entry		Remarks
1	If no calibration yet, see Chapter 6.1			
2	V2H0	4	**H**	Delete existing curve
3	V2H0	5	**H**	Linearisation mode “linear”
4	V2H5	e.g. 500 hl	**VH**	Max. level in technical units
5	V0H6	Value V2H5	**VH**	Upper range-value
6	V0H0 V0H9			Measured value in technical units Level in m/ft

Result
- The volume is displayed in V0H0
- The level in m/ft is displayed in V0H9.

Linearisation table

If tank volume or weight is not proportional to level within the set measuring range, then a linearisation table must be entered before the measured value can be output in technical units. The prerequisites are as follows:

- the max. 11 value pairs for the linearisation curve are known
- the linearisation curve rises continuously
- the levels for the first and last points should correspond to those of the empty and full calibration (E and F)
- the level points are entered in the units of calibration.

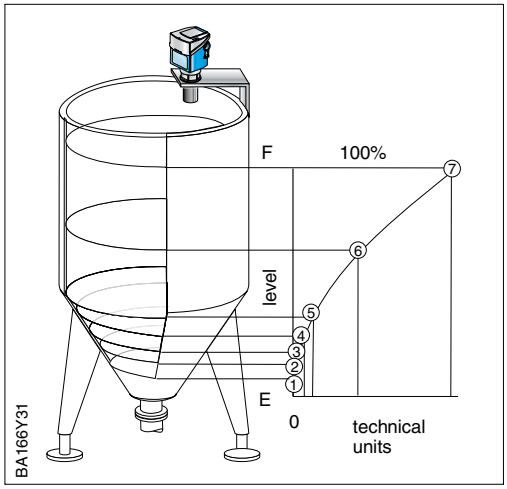

#	VH	Entry		Remarks
1	If no calibration yet, see Chapter 6.1			
2	V2H0	4	**H**	Delete existing curve
3	V2H0	2	**H**	Linearisation mode “manual”
4	V2H1	e.g. 1	**H**	1st value pair
5	V2H2	e.g. 0	**H**	Level point 1
6	V2H3	e.g. 0.6 hl	**H**	Volume point 1
7	Repeat steps 4...6 for up to 10 more value pairs			
8	V2H0	1	**VH**	Activate table
9	V0H5	Vol. at “E”	**H**	Lower range-value
10	V0H6	Vol. at “F”	**VH**	Upper range-value
11	V0H0 V0H9			Measured value volume/level

Result
- The volume is displayed in V0H0
- The level in m/ft is displayed in V0H9.

Horizontal cylinder

A linearisation curve for a horizontal cylinder can also be entered manually:

- The level is 0% for an empty tank and 100% for a completely full one. The points are entered in metres or feet in 10% steps.
- The volume for a completely full tank is 100%. A percentage volume is entered for each 10% step in level.
- Starting at the completely full tank, calculate the % volume for each level point.

$$\text{volume at x\% level} = \frac{\text{total volume x volume \%}}{100}$$

Line No. V2H1	Level V2H2		Volume V2H3	
#	%	m/ft	%	T. unit
1	0		0	
2	10		5.20	
3	20		14.24	
4	30		25.23	
5	40		37.35	
6	50		50.00	
7	60		61.64	
8	70		74.77	
9	80		85.76	
10	90		94.79	
11	100		100	

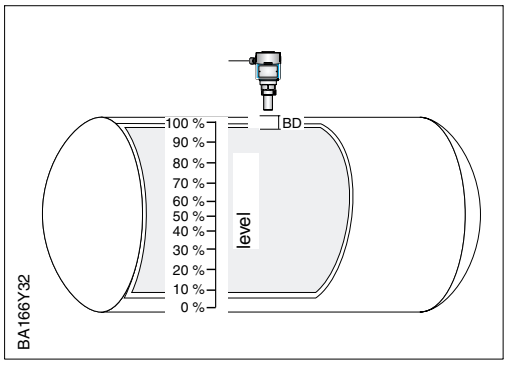

Semi-automatic entry

If the tank can be gradually filled, the level can be automatically detected by the transmitter. The associated volume is then entered by hand.

#	VH	Entry		Remarks
1	If no calibration yet, see Chapter 5.1			
2	V2H0	4	**H**	Delete existing curve
3	V2H0	3	**H**	Linearisation mode “semi-automatic”
4	V2H1	e.g. 1	**H**	1st value pair
5	V2H2	Read value	**H**	Current level
6	V2H3	e.g. 0.6 hl	**H**	Volume for V2H2
7	Repeat steps 4...6 for up to 10 more value pairs			
8	V2H0	1	**VH**	Activate table
9	V0H5	Vol. at “E”	**H**	Lower range-value
10	V0H6	Vol. at “F”	**VH**	Upper range-value
11	V0H0 V0H9			Measured value volume/level

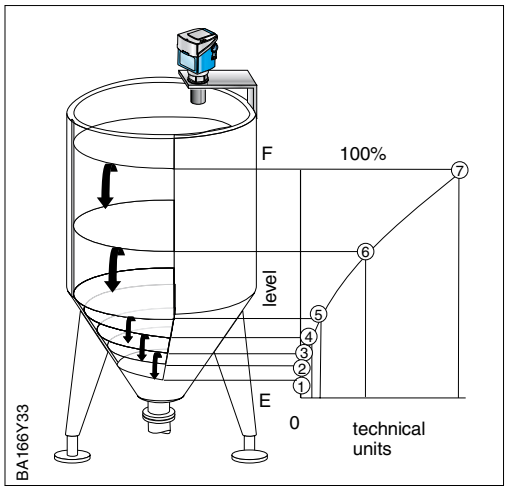

Result

- The volume is output in V0H0
- The level in m/ft is displayed in V0H9.

4.3 Other settings

The following parameters can be set to influence the output signal.

Settings

Field	Parameter	Significance
V8H3	Alarm delay on lost echo E641	An alarm delay up to 255 s can be set (default = 60 s) for a lost signal. The last value is held until this point.
V0H4	Output damping τ 0...255 s	Influences the time it takes for the signal output to react to a sudden change in level (63% of steady-state value). Default 5 s. Increasing the value damps the effect of e.g. rapid level changes on the measured value.
V0H7	Output on alarm 0: MIN (–9999) 1: MAX (+9999) 2: HOLD (last value)	*For display module only.* In order to signal an alarm, the bargraph and display assume the selected value.

Example

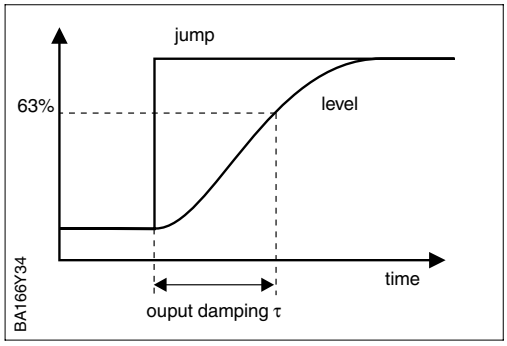

#	VH	Entry		Remarks
	➤ *Output signal and bargraph*			
1	V8H3	e.g. 30 s	**VH**	Delay on E 641
2	V0H4	e.g. 60 s	**H**	Output damping
	➤ *Bargraph only*			
3	V0H7	e.g. 0	**VH**	Output on alarm 0 = –9999 1 = +9999 2 = HOLD

4.4 Locking/Unlocking the Matrix

After all parameters have been entered, the matrix can be locked.

- on-site via the keys, see Chapter 4, or
- via the matrix by entering a three digit code number ≠ 333 or 9303 in V9H9 (333 or 9303 is the code to unlock the measuring point)

The measuring point is then protected against accidental or unauthorised entries.

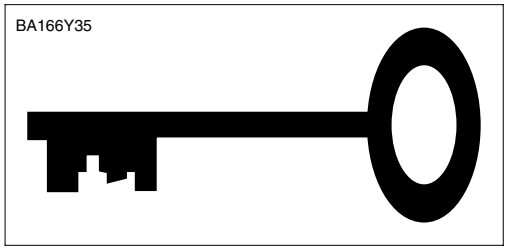

#	VH	Entry		Remarks
Lock				
1	V9H9	e.g. 100	**VH**	Matrix locked (except V9H9)
Unlock				
2	V9H9	333	**VH**	Matrix unlocked

Note!


Note!

- If the Prosonic T is locked by means of the keys **+** and **V** , then the entire matrix including V9H9 is locked. No parameters can be changed, not even via the communication interface. The matrix can only be unlocked by using the keys **–** and **H**.

4.5 Measuring point information

The following information about the measuring point can be read:

Matrix field	Display or entry
Measured value	
V0H0	Principle measured value
V0H5	Lower range-value in set units: forms basis for PV_SCALE
V0H6	Upper range-value in set units: forms basis for PV_SCALE
V0H8	Distance sensor – product surface (Bargraph display is proportional to echo quality)
V0H9	Level before linearisation (m/ft) (Bargraph display is proportional to echo quality)
Sensor data	
V3H2	Signal quality 1...10, the higher, the better
V3H4	Current temperature: if the temperature has exceeded 80°C, this value is held.
Measuring point information	
V9H3	Sensor number
V9H4	Device and software number 8110 = Profibus PA DPV1, software version 1.0
V9H4	Bus address
V9H9	Locking: 9999 means locking via keys
Behaviour on alarm	
V9H0	Current diagnostic code
V9H1	Last diagnostic code

Communication level

The matrix row “VA communication” can only be accessed via Commuwin II.

VAH0	Tag No. An 8-figure measuring point designation can be entered here.
VAH3	Unit of measured value

5 Trouble-Shooting

When the instructions in the manual have been followed correctly, the system must now function. Should this not be the case, the Prosonic T provides a number of possibilities for analysing and correcting faults.

5.1 Self-monitoring

The self-monitoring system of the Prosonic T differentiates between alarms and warnings.

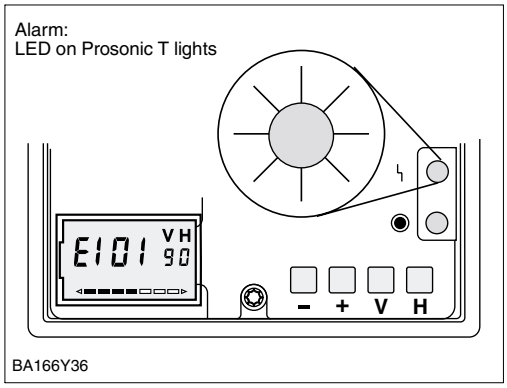

On an alarm

- The Prosonic T no longer measures – an error code is transmitted with the measured value - for Commuwin II “NaN” is transmitted.
- The red fault LED lights.
- The bargraph and display respond according to the setting in V0H7.
- An error code is displayed at matrix position V9H0 to help locate the fault, see page 24.

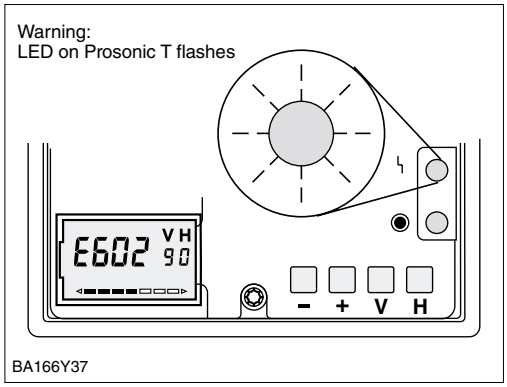

On a warning

- The Prosonic T continues to measure – an error code is transmitted with the measured value.
- The red fault LED flashes.
- An error code is displayed at matrix position V9H0 to help locate the fault, see page 24.

5.2 Error messages

The current error code is transmitted with the measured value and displayed in V9H0.

- The last error code is displayed in V9H1.

Table 6.1 lists the error codes with the corresponding messages.

Table 5.1
Error messages

Code	Message	Significance	Remedy
E101	Alarm	Invalid checksum	Appears shortly during start-up, if displayed permanently ☎ Call Service
E102	Warning	Invalid checksum	Appears shortly during start-up, if displayed permanently ☎ Call Service
E103	Warning	E2PROM update active	Appears shortly during start-up, if displayed permanently ☎ Call Service
E106	Alarm	Download of data to Prosonic T	Appears during download from computer, measurements cannot be made during this period
E110... E115	Alarm	Device fault	☎ Call Service
E116	Alarm	Download error	Appears if download cannot be started or completed Restart download
E125	Alarm	Sensor defective	☎ Call Service
E261	Alarm	Temperature sensor defective	☎ Call Service
E501	Alarm	Sensor electronics unknown	☎ Call Service
E602	Warning	Linearisation error – curve does not rise continuously, e.g. two identical values	Re-enter incorrect value
E604	Warning	No. of linearisation points < 2	Enter more points
E605	Alarm	No linearisation curve	Enter curve or deactivate linearisation
E613	Warning	Simulation mode	Message dissapears when simulation mode deactivated (V9H6 = 0)
E641	Alarm	No echo	Echo has temporarily disappeared Check whether sensor cannot be better positioned, e.g. to avoid turbulence, dust or foam
E661	Warning	Temperature at sensor too high	Check operating conditions

5.3 Fault analysis

The table below lists the most common measuring errors with possible remedies. If the first measure is successful, the remaining steps are not required.

Fault	Measured value	Check	Possible cause and remedy
Measured value in V0H0 too low	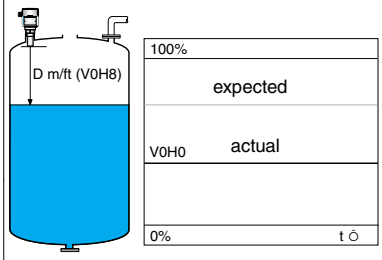	Distance D in V0H8 too large → yes ↓ no Linearisation? → yes ↓ no ✯ Call E+H Service	– Multiple echoes? ✯ Increase first echo factor (p. 28) ✯ Set V0H3 = 2 (p. 19) ✯ Change sensor position – Gas blanket or vapour above product? ✯ Call E+H Service – Temperature difference changing time-of-flight? ✯ Enter true level in V3H1 (p. 28) – Linearisation incorrect ✯ Range end values in V0H5/V0H6 = linearisation end values? ✯ Re-enter linearisation curve
Measured value in V0H0 too high	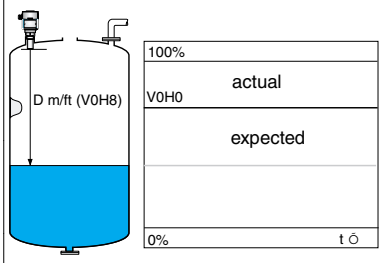	Distance D in V0H8 too small → yes ↓ no Linearisation? → yes ↓ no ✯ Call E+H Service	– Interference echoes from nozzle or fitings below sensor ✯ Activate fixed target suppression (p. 29) ✯ Change sensor position – Temperature difference changing time-of-flight? ✯ Enter true level in V3H1 (p. 28) – Linearisation incorrect ✯ Range end values in V0H5/V0H6 = linearisation end values? ✯ Re-enter linearisation curve
Measured value jumps although level constant	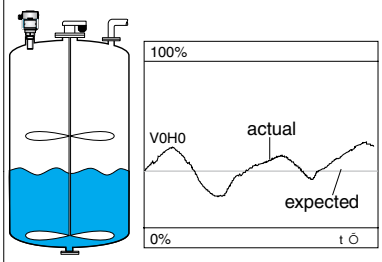	Signal influenced by turbulent surface or stirrer blades? → yes ↓ no ✯ Call E+H Service	– Turbulence? ✯ Increase output damping, p.25 – Stirer in beam? ✯ Set V0H3 = 0 or 2 ✯ Change sensor position
Measured value drops sporadically at constant level	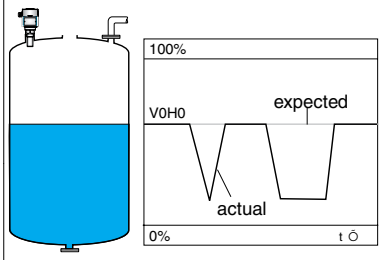	Happens when surface calm/ tank has dished top? → yes ↓ no ✯ Call E+H Service	– Multiple echoes? ✯ Increase first echo factor (p. 28) ✯ Set V0H3 = 2 (p. 19) ✯ Change sensor position
No communication		Hardware fault → yes ↓ no Software fault	– Wiring or screening? – Bus address ✯ Address invalid? ✯ Two devices with same address? – See Commuwin II manual BA 124F

5.4 Signal evaluation

Application parameter

The application parameter entered during calibration sets the various elements of the signal evaluation algorithm to well-proven values for particular applications. The visible elements involved are:

- Output damping,
  controls the response to a sudden change in level, see page 25
- First echo factor,
  ensures the level echo is taken when multiple echoes are present
- Stirrer damping
  cuts down the effect of a stirrer passing through the beam.

The table below summarises the pre-set parameters

Code	Application	Output damping	First echo factor	Stirrer damping
0	Standard Mainly liquids, also with stirrer	5s	Medium	On
1	Liquids with rapid level changes	0 s	Off	Off
2	Dished top Liquids only, also with stirrer	10 s	Maximum	On
3	Bulk solids	10 s	Medium	Off
4	Conveyor belts	0 s	Off	Off

First echo factor

The first echo factor can be changed independently of the application parameter in V3H4. It should be activated or increased in applications 0, 1, 3 or 4 when multiple echoes disturb the measurements.

#	VH	Entry		Remarks
1	V3H4	e.g. 1	H	First echo factor 0: deactivated 1: medium 2: high

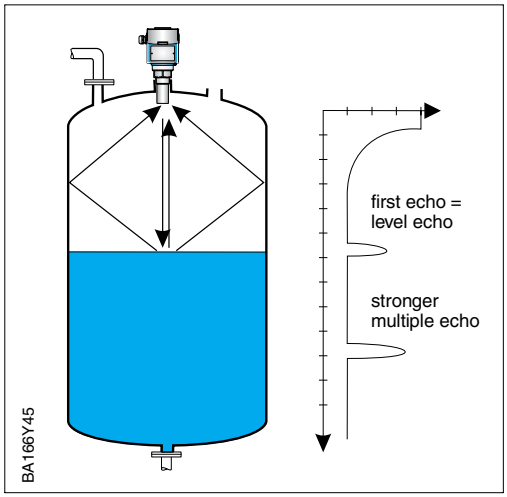

True level

By entering the true level in V3H1, the calibration can be corrected when a constant difference is observed between the true level and the measured value. This might result from a difference in temperature between the process and the temperature sensor in the Prosonic T which.controls the temperature-compensation.

The current temperature can be read from V3H5. Should the Prosonic have be operating above 80°C, then this temperature is held until viewed by the user. Operation above this temperature can result in permanent damage to the sensor.

Fixed target suppression

The fixed target suppression function allows interference echoes from fittings with the tank or welds, edges and burr in nozzles to be suppressed. Up to three echoes can be suppressed as shown below. The tank should practically be empty during the procedure.

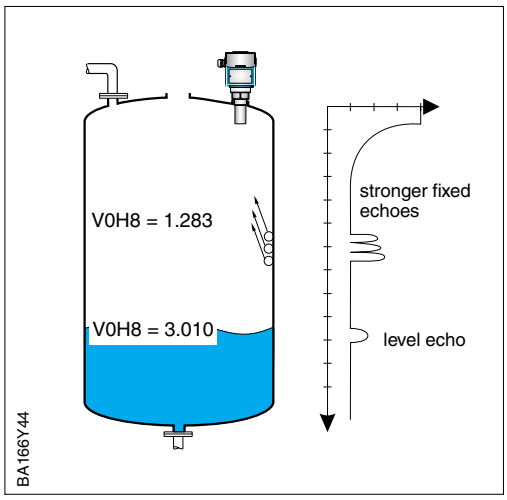

#	VH	Entry		Remarks
1	Check that tank is practically empty			
2	V0H8	Check measured distance D, wait until value stable		
3	V3H0	e.g. 3 m	**VH**	Enter true distance
4	Wait approx. 60 s			
5	V0H8	Check if measured distance D is approx. distance sensor–product YES: Fixed echoes suppressed NO: Repeat procedure		

Echo quality

The echo quality on a scale from 1 to 10 can be viewed in V3H2. In fields V0H8 and V0H9, it is output on the bargraph. The quality should be at least five for good measurements. For values below this level, the chance increases that changes in operating conditions, e.g. dust, vapours, or long distances will bring Error 641, lost echo. Better quality can be ensured by exact alignment during installation or a change of measuring location.

5.5 Simulation

Simulation

Where appropriate, the simulation function allows the linearisation and measured value to be tested. The following possibilities exist:

- Simulation of level in V9H6: fields V0H0 and V0H9 follow the set values.
- Simulation of volume in V9H6: fields V0H0 follows the set values.

Depending upon requirement, enter a value in V9H7: Warning E613 appears in V9H0 during simulation.

#	VH	Entry		Remarks
	➤ Simulation			
	Simulation level			
1	V9H6	**1**	**V**	Simulation level
	V9H7	e.g. 10	**VH**	Level value
	V0H0	——		Level/volume
	Simulation volume			
2	V9H6	**2**	**V**	Simulation volume
	V9H7	e.g. 50	**VH**	Volume value
	V0H0	——		Volume
	End simulation			
4	V9H6	**0**	**VH**	Simulation off

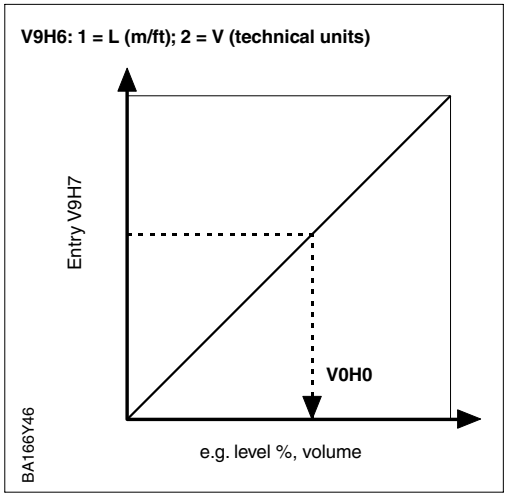

5.6 Reset to factory settings

The Prosonic T allows a reset to be made by entering:

- Code 333: Reset of all parameters to factory settings, with the exception of linearisation curve, units and tag. no.
  – is also invoked by the key reset without display
- The linearisation curve is cleared by entering 4 in V2H0.

On reset to factory parameters the values in [brackets] are assumed. The values in the (grey fields) are retained.

	H0	**H1**	**H2**	**H3**	**H4**	**H5**	**H6**	**H7**	**H8**	**H9**
V0		[E]	[F]	[0]	[5]	[0]	[100]	[1]		
V2	[5]					[100]				
V3	[0]	[0]			[1]	[T°C]				
V8			[0]	[60]						
V9							[0]			[9303]

Table 5.2
Customer settings –
Factory settings in brackets, grey field are unaffected by reset

6 Maintenance and Repair

Exchange of sensor

After installation of the new Prosonic T, the matrix parameters from the old device can be download from Commuwin II into the new device, provided both have the same software status (V9H3). The replacement will then measure correctly without the need for renewed calibration,

- If necessary, re-activate linearisation in V2H0
- If necessary, activate the fixed target suppression.

Maintenance

Check the condition of the sensor during regular inspections. If necessary, free the probe from build-up. When cleaning the Prosonic T, handle with care.

Repairs

Should the sensor need to be repaired by Endress+Hauser, please send it to your nearest service station with a note containing the following information:

- An exact description of the application for which it was used
- The chemical and physical properties of the product measured
- A short description of the fault.

Special precautions must be observed when sending the sensors for repair:

- Remove all traces of product.
- This is particularly important if the product can impair health, i.e. is corrosive, poisonous, carcinogenic, radioactive etc..
- If the last traces of dangerous products cannot be removed, e.g. product has penetrated into fissures or diffused into plastic parts, we kindly ask you not to send the transmitter for repair.

7 PA Parameters

Parameter	Matrix	Index (Slot = 1)	Read	Write	Type	Size bytes
Directory object header		0	X		OSTRING	12
Composite list directory entries		1	X		OSTRING	24
Physical block block object		14	X		OSTRING	20
PB Static revision		15	X		UNSIGNED16	2
PB Device tag	VAH0	16	X	X	OSTRING	32
PB Strategy		17	X	X	UNSIGNED16	2
PB Alert key		18	X	X	UNSIGNED8	1
PB Target mode		19	X	X	UNSIGNED8	1
PB Mode block		20	X		OSTRING	3
PB Alarm summary		21	X		OSTRING	8
PB Software revision		22	X		OSTRING	16
PB Hardware revision		23	X		OSTRING	16
PB Device manufacturer identity		24	X		UNSIGNED16	2
PB Device identity	(V99H0)	25	X		OSTRING	16
PB Device serial number		26	X		OSTRING	16
PB Diagnosis		27	X		OSTRING	4
PB Diagnosis extension		28	X		OSTRING	6
PB Diagnosis mask		29	X		OSTRING	4
PB Diagnosis extension mask		30	X		OSTRING	6
PB Device certiffication		31	X	X	OSTRING	16
PB Security lock	V9H9	32	X	X	UNSIGNED16	2
PB Factory reset	V9H5	33		X	UNSIGNED16	2
PB Descriptor		34	X	X	OSTRING	32
PB Device message		35	X	X	OSTRING	32
PB Device installation date		36	X	X	OSTRING	8
manufacturer specific						
PB Matrix error code	V9H0	42	X		UNSIGNED16	2
PB Matrix last error code	V9H1	43	X	X	UNSIGNED16	2
PB Device bus address	V9H4	44	X		UNSIGNED8	1
PB UpDown features supported		45	X		OSTRING	1
PB UpDown control		46		X	UNSIGNED8	1
PB UpDown parameter		47	X		UPDOWN_PARAM	20
PB Device and software number	V9H3	48	X		UNSIGNED16	2
Transducer block block object		54	X		OSTRING	20
TB Static revision		55	X		UNSIGNED16	2
TB Device tag	VAH0	56	X	X	OSTRING	32
TB Strategy		57	X	X	UNSIGNED16	2
TB Alert key		58	X	X	UNSIGNED8	1
TB Target mode		59	X	X	UNSIGNED8	1
TB Mode block		60	X		OSTRING	3
TB Alarm summary		61	X		OSTRING	8
TB Volume	V0H0	62	X		FLOAT	4
TB Volume unit	VAH3	63	X	X	UNSIGNED16	2
TB Level	V0H9	66	X		FLOAT	4
TB Measurement distance	V0H8	91	X		FLOAT	4
TB Distance unit	V8H2	92	X	X	UNSIGNED16	2
TB Empty	V0H1	93	X	X	FLOAT	4
TB Full	V0H2	94	X	X	FLOAT	4
TB Noise suppression	V3H0	95	X	X	FLOAT	4

Parameter	Matrix	Index (Slot = 1)	Read	Write	Type	Size
TB Echo alarm delay	V8H3	96	X	X	UNSIGNED16	2
TB Application	V0H3	98	X	X	UNSIGNED8	1
TB Echo quality	V3H2	99	X		UNSIGNED8	1
TB First echo factor	V3H4	100	X	X	UNSIGNED8	1
...manufacturer specific						
TB Damping	V0H4	109	X	X	FLOAT	4
TB Fail-safe	V0H7	110	X	X	UNSIGNED8	1
TB Simulation mode	V9H6	111	X	X	UNSIGNED8	1
TB Simulated value	V9H7	112	X	X	FLOAT	4
TB Linearisation mode	V2H0	113	X	X	UNSIGNED8	1
TB Linearisatiion table number	V2H1	114	X	X	UNSIGNED8	1
TB Linearisation table level	V2H2	115	X	X	FLOAT	4
TB Linearisation table volume	V2H3	116	X	X	FLOAT	4
TB Maximum Volume	V2H5	117	X	X	FLOAT	4
TB True level	V3H1	118	X	X	FLOAT	4
TB Type of sensor	V9H2	119	X		UNSIGNED16	2
TB Display format	V2H4	120	X	X	UNSIGNED8	1
TB Temperature	V3H5	123	X	X	FLOAT	4
Analog input block block data		129	X		OSTRING	20
AI Static revision		130	X		UNSIGNED16	2
AI Device tag	VAH0	131	X	X	OSTRING	32
AI Strategy		132	X	X	UNSIGNED16	2
AI Alert key		133	X	X	UNSIGNED8	1
AI Target mode		134	X	X	UNSIGNED8	1
AI Mode block		135	X		OSTRING	3
AI Alarm summary		136	X		OSTRING	8
AI OUT		139	X		VAL_STATUS_FLOAT	5
AI PV_SCALE	V0H5/H6	140	X	X	SCALING	11
AI OUT_SCALE		141	X	X	SCALING	11
AI CHANNEL		142	X	X	UNSIGNED16	2
AI PV_FTIME		143	X	X	FLOAT	4
AI ALARM_HYSTERESIS		144	X	X	FLOAT	4
AI HI_HI_LIMIT		145		X	FLOAT	4
AI HI_LIMIT		146		X	FLOAT	4
AI LO_LIMIT		147		X	FLOAT	4
AI LO_LO_LIMIT		148		X	FLOAT	4
AI HI_HI_ALARM		149	X		ALARM_FLOAT	16
AI HI_ALARM		150	X		ALARM_FLOAT	16
AI LO_ALARM		151	X		ALARM_FLOAT	16
AI LO_LO_ALARM		152	X		ALARM_FLOAT	16
AI SIMULATE		153	X	X	SIMULATION_FLOAT	6
View Objects						
Physical block		164	X		OSTRING	17
Transducer block		170	X		OSTRING	17
Analog input block		176	X		OSTRING	18

8 Operating Matrix

	H0	H1	H2	H3	H4	H5	H6	H7	H8	H9
V0 Basic calibration	Measured value *customer unit*	Empty calibration *metre/ft*	Full calibration *metre/ft*	Application parameter 0: liquid 1: rapid 2: dome cover 3:solids 4: conveyor	Output damping *seconds*	Lower range-lvalue (PV_SCALE) *customer units*	Upper range-value (PV_SCALE) *customer units*	Display on alarm 0: MIN 1: MAX 2: hold value	Measured distance *metre/ft*	Level *metre/ft*
V1										
V2 Linearis-ation	Linearisation 0: off 1: activate 2: manual 3: semi-auto 4: clear 5: linear	Table No.	Enter level *metre/ft*	Enter volume *customer units*	Service	Tank-volume *customer units*				
V3 Extended calibration	Fixed target suppression	True level *metre/ft*	Echo quality *1...10*		First echo factor 0: off 1: medium 2: high	Temperature *°C*				
V4...V6	not used									
V7 Service	*	*		*	*	*	*	*	*	*
V8 Operating mode			Length units 0: m 1: ft	Delay E641 0...255 s *seconds*						
V9 Simulation	Diagnosis code	Last diagnosis code H = clear	Sensor-No.	Software version	Device address	Reset 333: customer	Simulation 0: off 1: level 2: volume	Simulation value		Security lock 9303: unlock xxx: lock
VA Remote operation	Tag No.			Units for V0H0 1...12 : %, l, hl m^3, dm, cm qft (= ft^3), kg, t ft, US-gal						

Display field

Index

Europe

Austria
❑ Endress+Hauser Ges.m.b.H.
Wien
Tel. (01) 880 56-0, Fax (01) 880 56-335

Belarus
Belorgsintez
Minsk
Tel. (017) 2 508473, Fax (017) 2 508583

Belgium / Luxembourg
❑ Endress+Hauser N.V.
Brussels
Tel. (02) 248 06 00, Fax (02) 248 05 53

Bulgaria
Intertech-Automation
Sofia
Tel. (02) 9627152, Fax (02) 9621471

Croatia
❑ Endress+Hauser GmbH+Co.
Zagreb
Tel. (01) 663 77 85, Fax (01) 663 78 23

Cyprus
I+G Electrical Services Co. Ltd.
Nicosia
Tel. (02) 48 47 88, Fax (02) 48 46 90

Czech Republic
❑ Endress+Hauser Czech s.r.o.
Praha
Tel. (02) 667842 00, Fax (026) 667841 79

Denmark
❑ Endress+Hauser A/S
Søborg
Tel. (70) 13 11 32, Fax (70) 13 21 33

Estonia
Elvi-Aqua
Tartu
Tel. (7) 44 16 38, Fax (7) 44 15 82

Finland
❑ Metso Endress+Hauser Oy
Helsinki
Tel. (204) 83 160, Fax (204) 83 161

France
❑ Endress+Hauser S.A.
Huningue
Tel. (389) 69 67 68, Fax (389) 69 48 02

Germany
❑ Endress+Hauser
Messtechnik GmbH+Co. KG
Weil am Rhein
Tel. (07621) 975-01, Fax (07621) 975-555

Great Britain
❑ Endress+Hauser Ltd.
Manchester
Tel. (0161) 286 50 00, Fax (0161) 998 18 41

Greece
I & G Building Services Automation S.A.
Athens
Tel. (01) 924 15 00, Fax (01) 922 17 14

Hungary
❑ Endress+Hauser Magyarország
Budapest
Tel. (01) 4120421, Fax (01) 412 04 24

Iceland
Sindra-Stál hf
Reykjavik
Tel. 5750000, Fax 5750010

Ireland
❑ Flomeaco Endress+Hauser Ltd.
Clane
Tel. (045) 868 615, Fax (045) 868 182

Italy
❑ Endress+Hauser S.p.A.
Cernusco s/N Milano
Tel. (02) 921 92-1, Fax (02) 921 92-362

Latvia
Elekoms Ltd.
Riga
Tel. (07) 336444, Fax (07) 312894

Lithuania
UAB "Agava"
Kaunas
Tel. (03) 7202410, Fax (03) 7207414

Netherlands
❑ Endress+Hauser B.V.
Naarden
Tel. (035) 695 86 11, Fax (035) 695 88 25

Norway
❑ Endress+Hauser A/S
Lierskogen
Tel. (032) 859 850, Fax (032) 859 851

Poland
❑ Endress+Hauser Polska Sp. z o.o.
Wroclaw
Tel. (071) 7803700, Fax (071) 7803700

Portugal
❑ Endress+Hauser Lda.
Cacem
Tel. (219) 4267290 Fax (219) 4267299

Romania
Romconseng S.R.L.
Bucharest
Tel. (01) 410 16 34, Fax (01) 411 25 01

Russia
❑ Endress+Hauser GmbH+Co
Moscow
Tel. (095) 158 75 64, Fax (095) 7846391

Slovak Republic
Transcom Technik s.r.o.
Bratislava
Tel. (2) 44 88 86 90, Fax (2) 44 88 71 12

Slovenia
❑ Endress+Hauser D.O.O.
Ljubljana
Tel. (01) 519 22 17, Fax (01) 519 22 98

Spain
❑ Endress+Hauser S.A.
Sant Just Desvern
Tel. (93) 480 33 66, Fax (93) 473 38 39

Sweden
❑ Endress+Hauser AB
Sollentuna
Tel. (08) 55 51 16 00, Fax (08) 55 51 16 55

Switzerland
❑ Endress+Hauser Metso AG
Reinach/BL 1
Tel. (061) 715 75 75, Fax (061) 711 16 50

Turkey
Intek Endüstriyel Ölcü ve
Levent/Istanbul
Tel. (0212) 275 13 55, Fax (0212) 266 27 75

Ukraine
Photonika GmbH
Kiev
Tel. (44) 268 8102, Fax (44) 269 0805

Yugoslavia Rep.
Meris d.o.o.
Beograd
Tel. (11) 444 12966, Fax (11) 3085778

Africa

Algeria
Symes Systemes et mesures
Annaba
Tel. (38) 883003, Fax (38) 883002

Egypt
Anasia Egypt For Trading S.A.E.
Heliopolis/Cairo
Tel. (02) 2684159, Fax (02) 2684169

Morocco
Oussama S.A.
Casablanca
Tel. (02) 22241338, Fax (02) 2402657

South Africa
❑ Endress+Hauser Pty. Ltd.
Sandton
Tel. (011) 262 80 00, Fax (011) 262 80 62

Tunisia
Controle, Maintenance et Regulation
Tunis
Tel. (01) 793077, Fax (01) 788595

America

Argentina
❑ Endress+Hauser Argentina S.A.
Buenos Aires
Tel. (11) 45227970, Fax (11) 45227909

Bolivia
Tritec S.R.L.
Cochabamba
Tel. (04) 425693, Fax (04) 425081

Brazil
❑ Samson Endress+Hauser Ltda.
Sao Paulo
Tel. (011) 50 31 34 55, Fax (011) 50 31 30 67

Canada
❑ Endress+Hauser Ltd.
Burlington, Ontario
Tel. (905) 681 92 92, Fax (905) 681 94 44

Chile
❑ Endress+Hauser Chile Ltd.
Santiago
Tel. (02) 321-3009, Fax (02) 321-3025

Colombia
Colsein Ltda.
Bogota D.C.
Tel. (01) 236 76 59, Fax (01) 610 41 86

Costa Rica
EURO-TEC S.A.
San Jose
Tel. 2202808, Fax 2961542

Ecuador
Insetec Cia. Ltda.
Quito
Tel. (02) 226 91 48, Fax (02) 246 18 33

Guatemala
Automatizacion Y Control Industrial S.A.
Ciudad de Guatemala, C.A.
Tel. (03) 34 59 85, Fax (03) 32 74 31

Mexico
❑ Endress+Hauser S.A. de C.V.
Mexico, D.F
Tel. (5) 55568-2407, Fax (5) 55568-7459

Paraguay
Incoel S.R.L.
Asuncion
Tel. (021) 213 989, Fax (021) 226 583

Peru
Process Control S.A.
Lima
Tel. (2) 610515, Fax (2) 612978

USA
❑ Endress+Hauser Inc.
Greenwood, Indiana
Tel. (317) 535-7138, Fax (317) 535-8498

Venezuela
Controval C.A.
Caracas
Tel. (02) 944 09 66, Fax (02) 944 45 54

Asia

Azerbaijan
Modcon Systems
Baku
Tel. (12) 929859, Fax (12) 929859

China
❑ Endress+Hauser Shanghai
Instrumentation Co. Ltd.
Shanghai
Tel. (021) 54 90 23 00, Fax (021) 54 90 23 03

❑ Endress+Hauser Beijin
Instrumentation Co. Ltd.
Beijing
Tel. (010) 65882468, Fax: (010) 65881725

Hong Kong
❑ Endress+Hauser H.K. Ltd.
Hong Kong
Tel. 85225283120, Fax 85228654171

India
❑ Endress+Hauser (India) Pvt. Ltd.
Mumbai
Tel. (022) 852 14 58, Fax (022) 852 19 27

Indonesia
PT Grama Bazita
Jakarta
Tel. (21) 795 50 83, Fax (21) 797 50 89

Japan
❑ Sakura Endress Co. Ltd.
Tokyo
Tel. (0422) 54 06 11, Fax (0422) 55 02 75

Malaysia
❑ Endress+Hauser (M) Sdn. Bhd.
Shah Alam, Selangor Darul Ehsan
Tel. (03) 78464848, Fax (03) 78468800

Pakistan
Speedy Automation
Karachi
Tel. (021) 772 29 53, Fax (021) 773 68 84

Philippines
❑ Endress+Hauser Inc.
Pasig City, Metro Manila
Tel. (2) 6381871, Fax (2) 6388042

Singapore
❑ Endress+Hauser (S.E.A.) Pte., Ltd.
Singapore
Tel. (65) 66 82 22, Fax (65) 66 68 48

South Korea
❑ Endress+Hauser (Korea) Co., Ltd.
Seoul
Tel. (02) 658 72 00, Fax (02) 659 28 38

Taiwan
Kingjarl Corporation
Taipei
Tel. (02) 27 18 39 38, Fax (02) 27 13 41 90

Thailand
❑ Endress+Hauser Ltd.
Bangkok
Tel. (2) 996 78 11-20, Fax (2) 996 78 10

Uzbekistan
Im Mexatronoka EST
Tashkent
Tel. (71) 1167316, Fax (71) 1167316

Vietnam
Tan Viet Bao Co. Ltd.
Ho Chi Minh City
Tel. (08) 833 52 25, Fax (08) 833 52 27

Iran
PATSA Industy
Tehran
Tel. (021) 8726869, Fax(021) 8747761

Israel
Instrumetrics Industrial Control Ltd.
Netanya
Tel. (09) 835 70 90, Fax (09) 835 06 19

Jordan
A.P. Parpas Engineering S.A.
Amman
Tel. (06) 5539283, Fax (06) 5539205

Kingdom of Saudi Arabia
Anasia Ind. Agencies
Jeddah
Tel. (02) 671 00 14, Fax (02) 672 59 29

Lebanon
Network Engineering
Jbeil
Tel. (3) 944 0 80, Fax (9) 54 80 38

Sultanate of Oman
Mustafa Sultan Science & Industry Co. L.L.C.
Ruwi
Tel. 60 20 09, Fax 60 70 66

United Arab Emirates
Descon Trading EST.
Dubai
Tel. (04) 265 36 51, Fax (04) 265 32 64

Australia + New Zealand

Australia
❑ Endress+Hauser PTY. Ltd.
Sydney
Tel. (02) 88777000, Fax (02) 88777099

New Zealand
EMC Industrial Group Limited
Auckland
Tel. (09) 415 51 10, Fax (09) 415 51 15

All other countries

❑ Endress+Hauser GmbH+Co.KG
Instruments International
Weil am Rhein
Germany
Tel. (07621) 975-02, Fax (07621) 975-345

http://www.endress.com

Endress+Hauser
Nothing beats know-how

❑ Members of the Endress+Hauser group

06.02/PT

BA 166F/00/en/07.03
017398-1000
CCS/CV5

017398-1000