BA01059D/06/EN/02.13
71211171

Valid as of version
01.02.zz (Device firmware)

Operating Instructions
Proline Promass P 100 Modbus RS485

Coriolis flowmeter

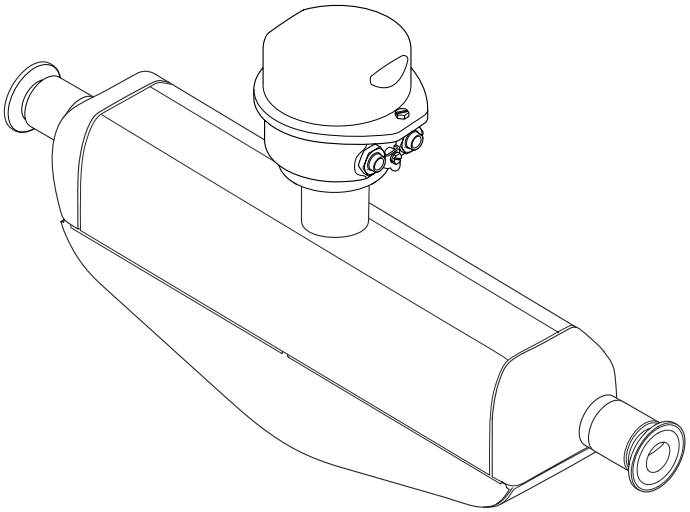

Endress+Hauser
People for Process Automation

- Make sure the document is stored in a safe place such that it is always available when working on or with the device.
- To avoid danger to individuals or the facility, read the "Basic safety instructions" section carefully, as well as all other safety instructions in the document that are specific to working procedures.
- The manufacturer reserves the right to modify technical data in line with technological developments without prior notice. Your Endress+Hauser sales center will supply you with current information and updates to this manual.

Table of contents

1 Document information 5
1.1 Document function 5
1.2 Symbols used 5
1.2.1 Safety symbols 5
1.2.2 Electrical symbols 5
1.2.3 Tool symbols 6
1.2.4 Symbols for certain types of information 6
1.2.5 Symbols in graphics 6
1.3 Documentation 7
1.3.1 Standard documentation 7
1.3.2 Supplementary device-dependent documentation 7
1.4 Registered trademarks 7

2 Basic safety instructions 8
2.1 Requirements for the personnel 8
2.2 Designated use 8
2.3 Workplace safety 9
2.4 Operational safety 9
2.5 Product safety 9

3 Product description 10
3.1 Product design 10
3.1.1 Device version with Modbus RS485 communication type 10

4 Incoming acceptance and product identification 11
4.1 Incoming acceptance 11
4.2 Product identification 12
4.2.1 Transmitter nameplate 12
4.2.2 Sensor nameplate 13
4.2.3 Promass 100 safety barrier - nameplate 14
4.2.4 Symbols on measuring device 14

5 Storage and transport 15
5.1 Storage conditions 15
5.2 Transporting the product 15
5.3 Packaging disposal 16

6 Installation 17
6.1 Installation conditions 17
6.1.1 Mounting position 17
6.1.2 Requirements from environment and process 19
6.1.3 Special mounting instructions 20
6.2 Mounting the measuring device 22
6.2.1 Required tools 22
6.2.2 Preparing the measuring device 22
6.2.3 Mounting the measuring device 22
6.3 Post-installation check 23

7 Electrical connection 24
7.1 Connection conditions 24
7.1.1 Required tools 24
7.1.2 Requirements for connecting cable . . . 24
7.1.3 Terminal assignment 26
7.1.4 Pin assignment, device plug 28
7.1.5 Shielding and grounding 29
7.1.6 Preparing the measuring device 29
7.2 Connecting the measuring device 29
7.2.1 Connecting the transmitter 30
7.2.2 Connecting the Safety Barrier Promass 100 31
7.3 Hardware settings 32
7.3.1 Enabling the terminating resistor 32
7.4 Ensuring the degree of protection 32
7.5 Post-connection check 33

8 Operation options 34
8.1 Overview of operation options 34
8.2 Structure and function of the operating menu 35
8.2.1 Structure of the operating menu 35
8.2.2 Operating philosophy 36
8.3 Access to the operating menu via the operating tool 37
8.3.1 Connecting the operating tool 37
8.3.2 FieldCare 37

9 System integration 39
9.1 Overview of device description files 39
9.1.1 Current version data for the device . . . 39
9.1.2 Operating tools 39
9.2 Modbus RS485 information 39
9.2.1 Function codes 39
9.2.2 Register information 40
9.2.3 Response time 40
9.2.4 Modbus data map 40

10 Commissioning 43
10.1 Function check 43
10.2 Establishing a connection via FieldCare 43
10.3 Configuring the measuring device 43
10.3.1 Setting the system units 43
10.3.2 Selecting and setting the medium . . . 46
10.3.3 Configuring communication interface 47
10.3.4 Configuring the low flow cut off 49
10.3.5 Configuring the partial filled pipe detection 50

10.4 Advanced settings 51
10.4.1 Defining the tag name 51
10.4.2 Calculated values 51
10.4.3 Carrying out a sensor adjustment 52
10.4.4 Configuring the totalizer 53
10.5 Simulation 54
10.5.1 Parameter overview with brief description 55
10.6 Protecting settings from unauthorized access 55
10.6.1 Write protection via write protection switch 55

11 Operation 57
11.1 Read device locking status 57
11.2 Reading measured values 57
11.2.1 Process variables 57
11.2.2 Totalizer 58
11.3 Adapting the measuring device to the process conditions 59
11.4 Performing a totalizer reset 59

12 Diagnostics and troubleshooting . . . 61
12.1 General troubleshooting 61
12.2 Diagnostic information via light emitting diodes 61
12.2.1 Transmitter 61
12.2.2 Safety Barrier Promass 100 62
12.3 Diagnostic information in FieldCare 62
12.3.1 Diagnostic options 62
12.3.2 Calling up remedy information 63
12.4 Diagnostic information via communication interface 63
12.4.1 Reading out diagnostic information . . 63
12.4.2 Configuring error response mode 64
12.5 Adapting the diagnostic information 64
12.5.1 Adapting the diagnostic behavior 64
12.6 Overview of diagnostic information 65
12.7 Pending diagnostic events 67
12.8 Diagnostic list 67
12.9 Event logbook 68
12.9.1 Event history 68
12.9.2 Filtering the event logbook 68
12.9.3 Overview of information events 68
12.10 Resetting the measuring device 69
12.11 Device information 69
12.12 Firmware history 70

13 Maintenance 71
13.1 Maintenance tasks 71
13.1.1 Exterior cleaning 71
13.1.2 Interior cleaning 71
13.2 Measuring and test equipment 71
13.3 Endress+Hauser services 71

14 Repair 72
14.1 General notes 72
14.2 Spare parts 72
14.3 Endress+Hauser services 72
14.4 Return 72
14.5 Disposal 72
14.5.1 Removing the measuring device 72
14.5.2 Disposing of the measuring device . . . 73

15 Accessories 74
15.1 Device-specific accessories 74
15.1.1 For the sensor 74
15.2 Communication-specific accessories 74
15.3 Service-specific accessories 75
15.4 System components 75

16 Technical data 76
16.1 Application 76
16.2 Function and system design 76
16.3 Input 76
16.4 Output 78
16.5 Power supply 79
16.6 Performance characteristics 81
16.7 Installation 84
16.8 Environment 84
16.9 Process 85
16.10 Mechanical construction 87
16.11 Operability 89
16.12 Certificates and approvals 89
16.13 Application packages 91
16.14 Accessories 91
16.15 Documentation 91

17 Appendix 93
17.1 Overview of the operating menu 93

Index 109

1 Document information

1.1 Document function

These Operating Instructions contain all the information that is required in various phases of the life cycle of the device: from product identification, incoming acceptance and storage, to mounting, connection, operation and commissioning through to troubleshooting, maintenance and disposal.

1.2 Symbols used

1.2.1 Safety symbols

Symbol	Meaning
DANGER A0011189-EN	**DANGER!** This symbol alerts you to a dangerous situation. Failure to avoid this situation will result in serious or fatal injury.
WARNING A0011190-EN	**WARNING!** This symbol alerts you to a dangerous situation. Failure to avoid this situation can result in serious or fatal injury.
CAUTION A0011191-EN	**CAUTION!** This symbol alerts you to a dangerous situation. Failure to avoid this situation can result in minor or medium injury.
NOTICE A0011192-EN	**NOTICE!** This symbol contains information on procedures and other facts which do not result in personal injury.

1.2.2 Electrical symbols

Symbol	Meaning
A0011197	**Direct current** A terminal to which DC voltage is applied or through which direct current flows.
A0011198	**Alternating current** A terminal to which alternating voltage is applied or through which alternating current flows.
A0017381	**Direct current and alternating current** ▪ A terminal to which alternating voltage or DC voltage is applied. ▪ A terminal through which alternating current or direct current flows.
A0011200	**Ground connection** A grounded terminal which, as far as the operator is concerned, is grounded via a grounding system.
A0011199	**Protective ground connection** A terminal which must be connected to ground prior to establishing any other connections.
A0011201	**Equipotential connection** A connection that has to be connected to the plant grounding system: This may be a potential equalization line or a star grounding system depending on national or company codes of practice.

1.2.3 Tool symbols

Symbol	Meaning
A0011221	Allen key
A0011222	Open-ended wrench

1.2.4 Symbols for certain types of information

Symbol	Meaning
A0011182	**Allowed** Indicates procedures, processes or actions that are allowed.
A0011183	**Preferred** Indicates procedures, processes or actions that are preferred.
A0011184	**Forbidden** Indicates procedures, processes or actions that are forbidden.
A0011193	**Tip** Indicates additional information.
A0011194	**Reference to documentation** Refers to the corresponding device documentation.
A0011195	**Reference to page** Refers to the corresponding page number.
A0011196	**Reference to graphic** Refers to the corresponding graphic number and page number.
1., 2., 3....	**Series of steps**
✔	**Result of a sequence of actions**
A0013562	**Help in the event of a problem**

1.2.5 Symbols in graphics

Symbol	Meaning
1, 2, 3,...	Item numbers
1., 2., 3....	Series of steps
A, B, C, ...	Views
A-A, B-B, C-C, ...	Sections
A0013441	Flow direction
A0011187	**Hazardous area** Indicates a hazardous area.
A0011188	**Safe area (non-hazardous area)** Indicates a non-hazardous area.

1.3 Documentation

The following document types are available:
- On the CD-ROM supplied with the device
- In the Download Area of the Endress+Hauser Internet site: www.endress.com → Download

For a detailed list of the individual documents along with the documentation code (→ 91)

1.3.1 Standard documentation

Document type	Purpose and content of the document
Technical Information	**Planning aid for your device** The document contains all the technical data on the device and provides an overview of the accessories and other products that can be ordered for the device.
Brief Operating Instructions	**Guide that takes you quickly to the 1st measured value** The Brief Operating Instructions contain all the essential information from incoming acceptance to initial commissioning.
Modbus RS485 register information	**Reference for Modbus RS485 register information** The document provides Modbus-specific information for each individual parameter in the operating menu.

1.3.2 Supplementary device-dependent documentation

Additional documents are supplied depending on the device version ordered: Always comply strictly with the instructions in the supplementary documentation. The supplementary documentation is an integral part of the device documentation.

1.4 Registered trademarks

Modbus®
Registered trademark of SCHNEIDER AUTOMATION, INC.

TRI-CLAMP ®
Registered trademark of Ladish & Co., Inc., Kenosha, USA

Applicator®, FieldCare®, Field Xpert™, HistoROM®, TMB®, Heartbeat Technology™
Registered or registration-pending trademarks of the Endress+Hauser Group

2 Basic safety instructions

2.1 Requirements for the personnel

The personnel for installation, commissioning, diagnostics and maintenance must fulfill the following requirements:
- Trained, qualified specialists must have a relevant qualification for this specific function and task
- Are authorized by the plant owner/operator
- Are familiar with federal/national regulations
- Before beginning work, the specialist staff must have read and understood the instructions in the Operating Instructions and supplementary documentation as well as in the certificates (depending on the application)
- Following instructions and basic conditions

The operating personnel must fulfill the following requirements:
- Being instructed and authorized according to the requirements of the task by the facility's owner-operator
- Following the instructions in these Operating Instructions

2.2 Designated use

Application and media
The measuring device described in these Instructions is intended only for flow measurement of liquids and gases.

Depending on the version ordered, the measuring device can also measure potentially explosive, flammable, poisonous and oxidizing media.

Measuring devices for use in hazardous areas, in hygienic applications or in applications where there is an increased risk due to process pressure, are labeled accordingly on the nameplate.

To ensure that the measuring device remains in proper condition for the operation time:
- Only use the measuring device in full compliance with the data on the nameplate and the general conditions listed in the Operating Instructions and supplementary documentation.
- Based on the nameplate, check whether the ordered device is permitted for the intended use in the hazardous area (e.g. explosion protection, pressure vessel safety).
- Use the measuring device only for media against which the process-wetted materials are adequately resistant.
- If the measuring device is not operated at atmospheric temperature, compliance with the relevant basic conditions specified in the device documentation provided (on the CD-ROM) is absolutely essential.

Incorrect use
Non-designated use can compromise safety. The manufacturer is not liable for damage caused by improper or non-designated use.

NOTICE
Danger of breakage of the measuring tube due to corrosive or abrasive fluids.
Housing breakage due to mechanical overload possible!
- Verify the compatibility of the process fluid with the measuring tube material.
- Ensure the resistance of all fluid-wetted materials in the process.
- Observe the specified maximum process pressure.

Verification for borderline cases:
- For special fluids and fluids for cleaning, Endress+Hauser is glad to provide assistance in verifying the corrosion resistance of fluid-wetted materials, but does not accept any

warranty or liability as minute changes in the temperature, concentration or level of contamination in the process can alter the corrosion resistance properties.

Residual risks

The external surface temperature of the housing can increase by max. 20 K due to the power consumption of the electronic components. Hot process fluids passing through the measuring device will further increase the surface temperature of the housing. The surface of the sensor, in particular, can reach temperatures which are close to the fluid temperature.

Possible burn hazard due to fluid temperatures!

- ▶ For elevated fluid temperature, ensure protection against contact to prevent burns.

2.3 Workplace safety

For work on and with the device:

- ▶ Wear the required personal protective equipment according to federal/national regulations.

For welding work on the piping:

- ▶ Do not ground the welding unit via the measuring device.

2.4 Operational safety

Risk of injury.

- ▶ Operate the device in proper technical condition and fail-safe condition only.
- ▶ The operator is responsible for interference-free operation of the device.

Conversions to the device

Unauthorized modifications to the device are not permitted and can lead to unforeseeable dangers.

- ▶ If, despite this, modifications are required, consult with Endress+Hauser.

Repair

To ensure continued operational safety and reliability,

- ▶ Carry out repairs on the device only if they are expressly permitted.
- ▶ Observe federal/national regulations pertaining to repair of an electrical device.
- ▶ Use original spare parts and accessories from Endress+Hauser only.

2.5 Product safety

This measuring device is designed in accordance with good engineering practice to meet state-of-the-art safety requirements, has been tested, and left the factory in a condition in which they are safe to operate.

It meets general safety standards and legal requirements. It also complies with the EC directives listed in the device-specific EC Declaration of Conformity. Endress+Hauser confirms this by affixing the CE mark to the device.

3 Product description

3.1 Product design

3.1.1 Device version with Modbus RS485 communication type

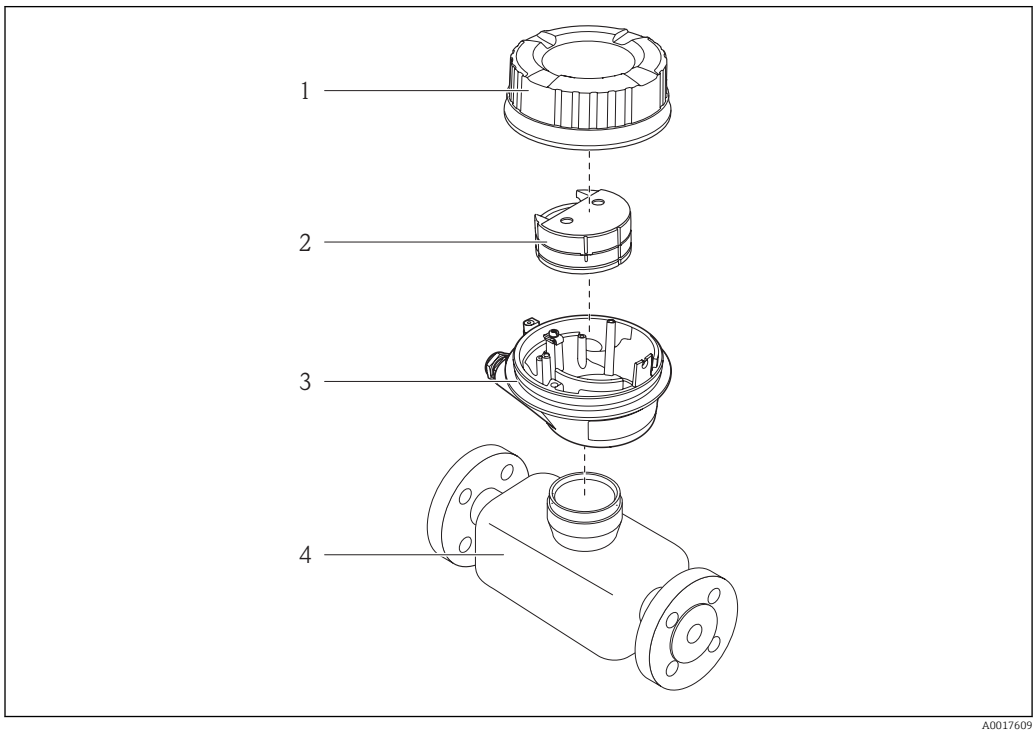

1 Important components of a measuring device

1 Transmitter housing cover
2 Main electronics module for Modbus RS485
3 Transmitter housing
4 Sensor

In the case of the device version with Modbus RS485 intrinsically safe, the Safety Barrier Promass 100 forms part of the scope of supply.

4 Incoming acceptance and product identification

4.1 Incoming acceptance

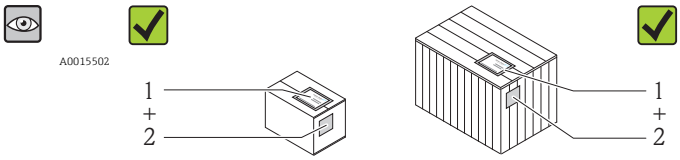

A0013843

Is the order code on the delivery note (1) identical to the order code on the product sticker (2)?

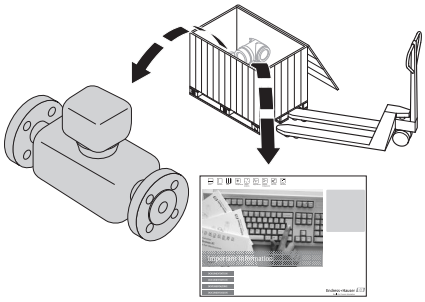

A0013695

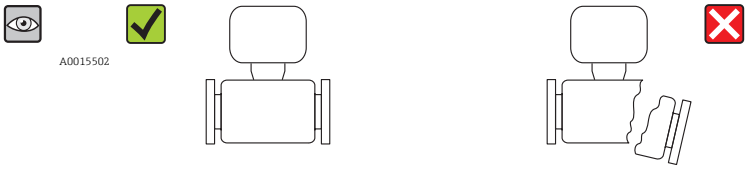

A0013698

Are the goods undamaged?

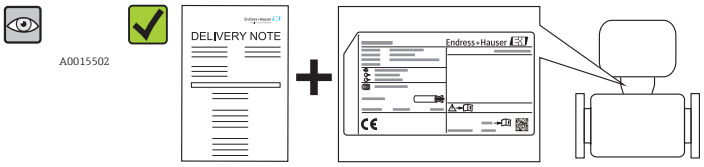

A0013699

Do the nameplate data match the ordering information on the delivery note?

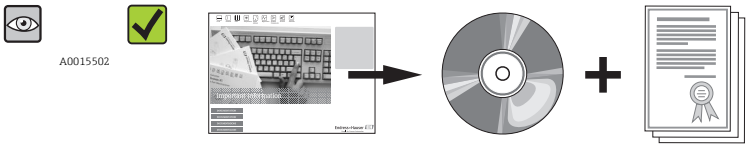

A0013697

Is the CD-ROM with the Technical Documentation and documents present?

If one of the conditions is not satisfied, contact your Endress+Hauser Sales Center.

4.2 Product identification

The following options are available for identification of the measuring device:
- Nameplate specifications
- Order code with breakdown of the device features on the delivery note
- Enter serial numbers from nameplates in *W@M Device Viewer* (www.endress.com/deviceviewer): All information about the measuring device is displayed.

For an overview of the scope of the Technical Documentation provided, refer to the following:
- The "Additional standard documentation on the device" (→ 7) and "Supplementary device-dependent documentation" (→ 7) sections
- The *W@M Device Viewer*: Enter the serial number from the nameplate (www.endress.com/deviceviewer)

4.2.1 Transmitter nameplate

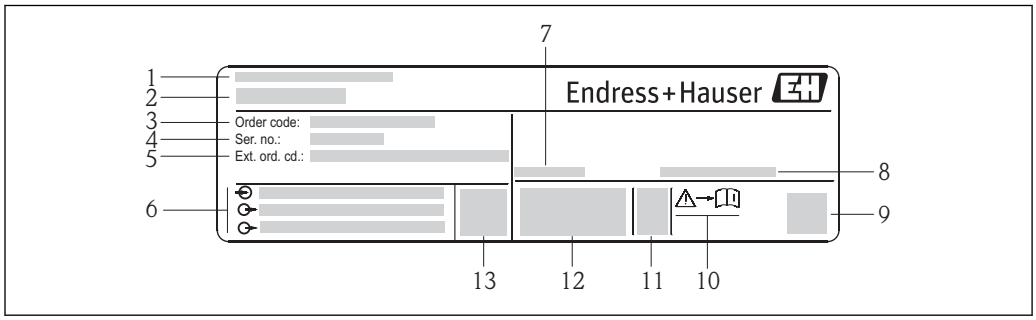

2 *Example of a transmitter nameplate*

1 *Manufacturing location*
2 *Name of the transmitter*
3 *Order code*
4 *Serial number*
5 *Extended order code*
6 *Electrical connection data, e.g. available inputs and outputs, supply voltage*
7 *Permitted ambient temperature range (T_a)*
8 *Degree of protection*
9 *2-D matrix code*
10 *Document number of safety-related supplementary documentation (→ 92)*
11 *Manufacturing date: year-month*
12 *CE mark, C-Tick*
13 *Firmware version (FW)*

4.2.2 Sensor nameplate

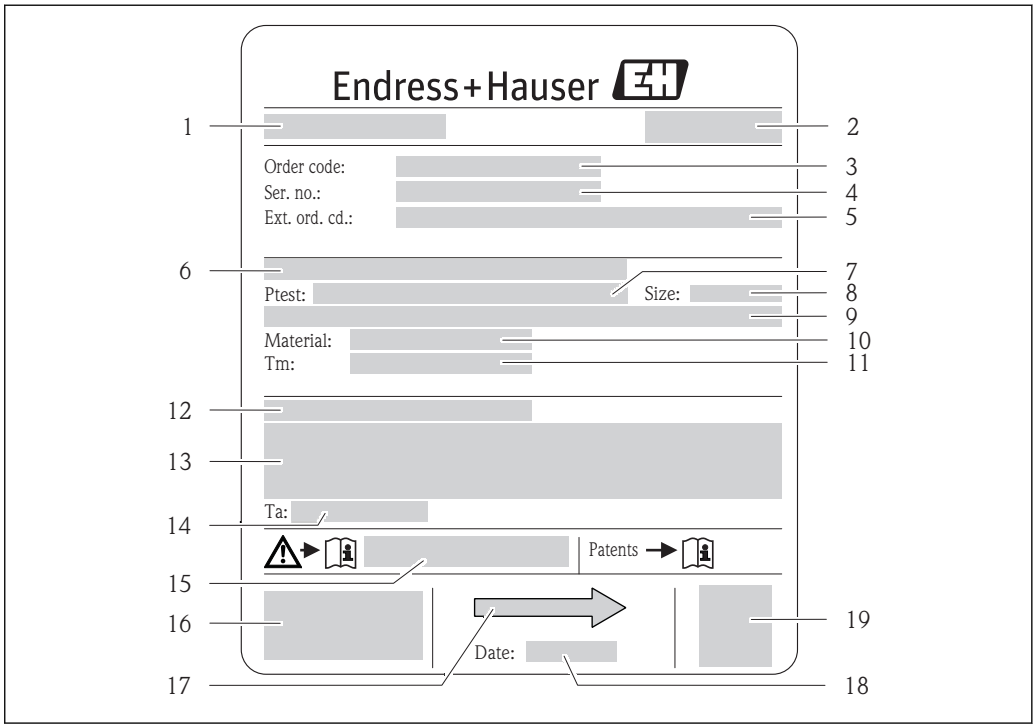

3 *Example of a sensor nameplate*

1 *Name of the sensor*
2 *Manufacturing location*
3 *Order code*
4 *Serial number (Ser. no.)*
5 *Extended order code (Ext. ord. cd.)*
6 *Flange nominal diameter/nominal pressure*
7 *Test pressure of the sensor*
8 *Nominal diameter of the sensor*
9 *Sensor-specific data: e.g. pressure range of secondary containment, wide-range density specification (special density calibration)*
10 *Material of measuring tube and manifold*
11 *Medium temperature range*
12 *Degree of protection*
13 *Approval information for explosion protection and Pressure Equipment Directive*
14 *Permitted ambient temperature (T_a)*
15 *Document number of safety-related supplementary documentation (→ 92)*
16 *CE mark, C-Tick*
17 *Flow direction*
18 *Manufacturing date: year-month*
19 *2-D matrix code*

Order code
The measuring device is reordered using the order code.

Extended order code
- The device type (product root) and basic specifications (mandatory features) are always listed.
- Of the optional specifications (optional features), only the safety and approval-related specifications are listed (e.g. LA). If other optional specifications are also ordered, these are indicated collectively using the # placeholder symbol (e.g. #LA#).
- If the ordered optional specifications do not include any safety and approval-related specifications, they are indicated by the + placeholder symbol (e.g. XXXXXX-ABCDE +).

4.2.3 Promass 100 safety barrier - nameplate

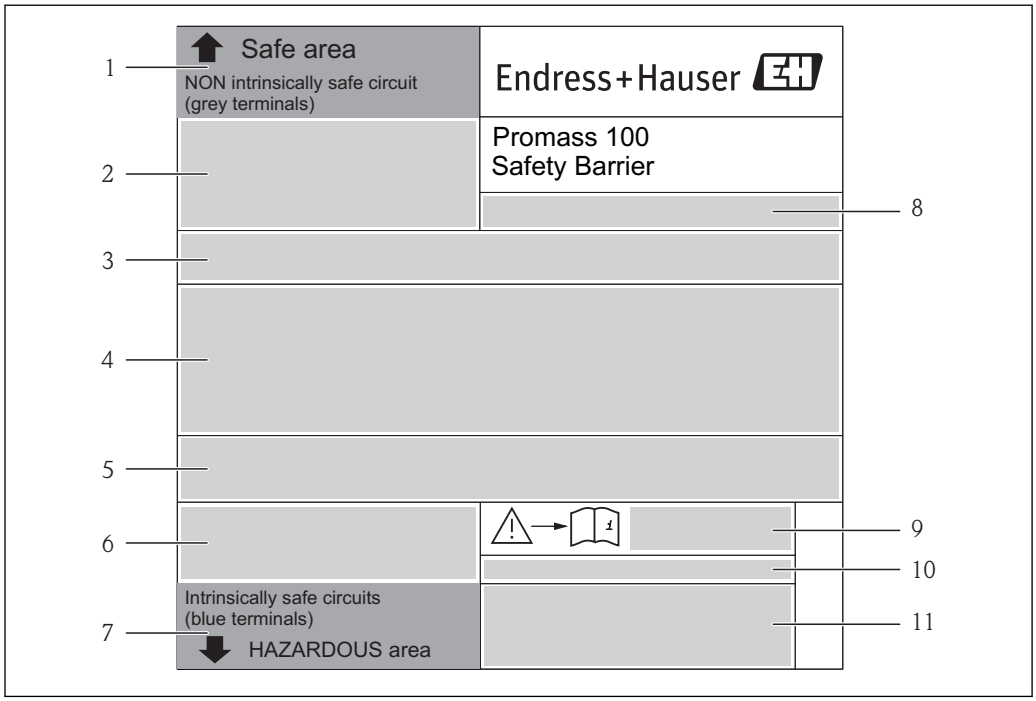

4 *Example of a Safety Barrier Promass 100 nameplate*

1 *Non-hazardous area or zone 2/div. 2*
2 *Serial number, material number and 2-D matrix code of the Safety Barrier Promass 100*
3 *Electrical connection data, e.g. available inputs and outputs, supply voltage*
4 *Explosion protection approval information*
5 *Safety warning*
6 *Communication-specific information*
7 *Intrinsically safe area*
8 *Manufacturing location*
9 *Document number of safety-related supplementary documentation (→ 92)*
10 *Permitted ambient temperature (T_a)*
11 *CE mark, C-Tick*

4.2.4 Symbols on measuring device

Symbol	Meaning
⚠	**WARNING!** This symbol alerts you to a dangerous situation. Failure to avoid this situation can result in serious or fatal injury.
A0011194	**Reference to documentation** Refers to the corresponding device documentation.
A0011199	**Protective ground connection** A terminal which must be connected to ground prior to establishing any other connections.

5 Storage and transport

5.1 Storage conditions

Observe the following notes for storage:
- Store in the original packaging to ensure protection from shock.
- Do not remove protective covers or protective caps installed on process connections. They prevent mechanical damage to the sealing surfaces and fouling in the measuring tube.
- Protect from direct sunlight to avoid unacceptably high surface temperatures.
- Storage temperature: −40 to +80 °C (−40 to +176 °F), preferable for +20 °C (+68 °F)
- Store in a dry and dust-free place.
- Do not store outdoors.

5.2 Transporting the product

⚠ WARNING

Center of gravity of the measuring device is higher than the suspension points of the webbing slings.

Risk of injury if the measuring device slips.
- ▶ Secure the measuring device from rotating or slipping.
- ▶ Observe the weight specified on the packaging (stick-on label).
- ▶ Observe the transport instructions on the stick-on label on the electronics compartment cover.

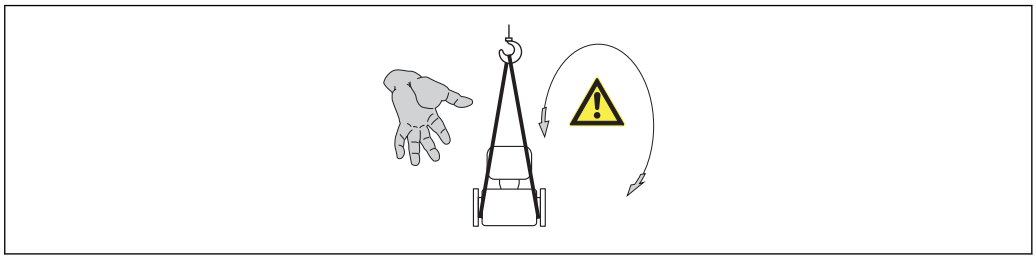

A0015606

Observe the following notes during transport:
- Transport the measuring device to the measuring point in the original packaging.
- Lifting gear
  - Webbing slings: Do not use chains, as they could damage the housing.
  - For wood crates, the floor structure enables these to be loaded lengthwise or broadside using a forklift.
- For measuring device > DN 40 (1½ in): lift the measuring device using the webbing slings at the process connections; do not lift at the transmitter housing.
- Do not remove protective covers or protective caps installed on process connections. They prevent mechanical damage to the sealing surfaces and fouling in the measuring tube.

5.3 Packaging disposal

All packaging materials are environmentally friendly and 100% recyclable:

- Measuring device secondary packaging: polymer stretch film that conforms to EC Directive 2002/95/EC (RoHS).
- Packaging:
  - Wood crate, treated in accordance with ISPM 15 standard, which is confirmed by the affixed IPPC logo.
    or
  - Carton in accordance with European Packaging Directive 94/62EC; recyclability is confirmed by the affixed RESY symbol.
- Seaworthy packaging (optional): Wood crate, treated in accordance with ISPM 15 standard, which is confirmed by the affixed IPPC logo.
- Carrying and mounting hardware:
  - Disposable plastic pallet
  - Plastic straps
  - Plastic adhesive strips
- Dunnage: Paper cushion

6 Installation

6.1 Installation conditions

No special measures such as supports are necessary. External forces are absorbed by the construction of the device.

6.1.1 Mounting position

Mounting location

To prevent measuring errors arising from accumulation of gas bubbles in the measuring tube, avoid the following mounting locations in the pipe:
- Highest point of a pipeline.
- Directly upstream of a free pipe outlet in a down pipe.

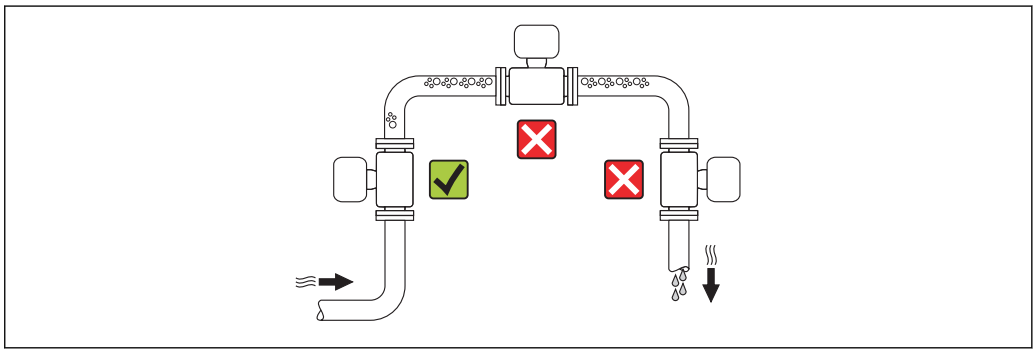

A0015595

Installation in down pipes

However, the following installation suggestion allows for installation in an open vertical pipeline. Pipe restrictions or the use of an orifice with a smaller cross-section than the nominal diameter prevent the sensor running empty while measurement is in progress.

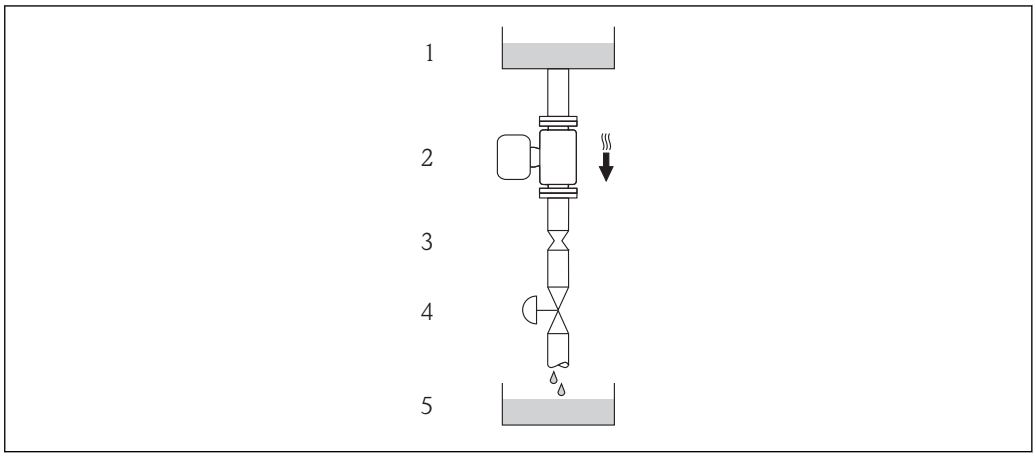

A0015596

5 *Installation in a down pipe (e.g. for batching applications)*

1 *Supply tank*
2 *Sensor*
3 *Orifice plate, pipe restriction*
4 *Valve*
5 *Batching tank*

DN		Ø orifice plate, pipe restriction	
[mm]	[in]	[mm]	[in]
8	⅜	6	0.24
15	½	10	0.40
25	1	14	0.55
40	1½	22	0.87
50	2	28	1.10

Orientation

The direction of the arrow on the sensor nameplate helps you to install the sensor according to the flow direction (direction of medium flow through the piping).

Orientation			Recommendation
A	Vertical orientation	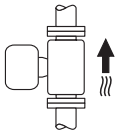 A0015591	✓✓
B	Horizontal orientation, transmitter head up	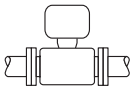 A0015589	✓✓ [1] Exception: (→ 6, 18)
C	Horizontal orientation, transmitter head down	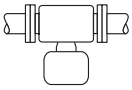 A0015590	✓✓ [2] Exception: (→ 6, 18)
D	Horizontal orientation, transmitter head at side	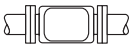 A0015592	✓✓ (→ 21)

1) Applications with low process temperatures may reduce the ambient temperature. To maintain the minimum ambient temperature for the transmitter, this orientation is recommended.
2) Applications with high process temperatures may increase the ambient temperature. To maintain the maximum ambient temperature for the transmitter, this orientation is recommended.

If a sensor is installed horizontally with a curved measuring tube, match the position of the sensor to the fluid properties.

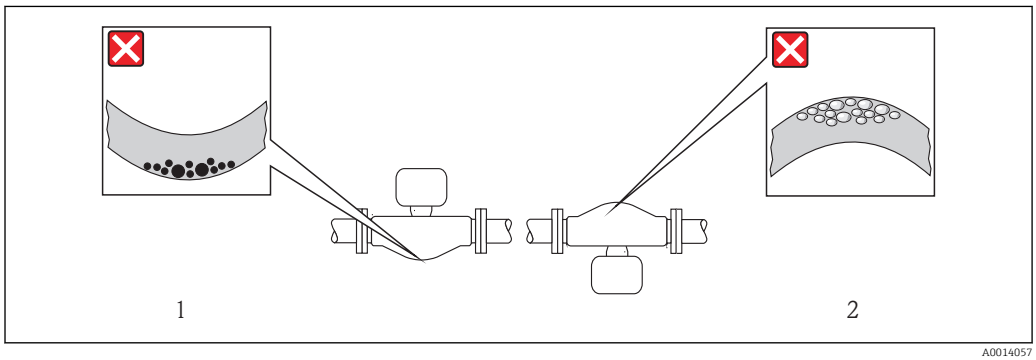

A0014057

6 Orientation of sensor with curved measuring tube

1 Avoid this orientation for fluids with entrained solids: Risk of solids accumulating.
2 Avoid this orientation for outgassing fluids: Risk of gas accumulating.

Inlet and outlet runs

No special precautions need to be taken for fittings which create turbulence, such as valves, elbows or T-pieces, as long as no cavitation occurs (→ 19).

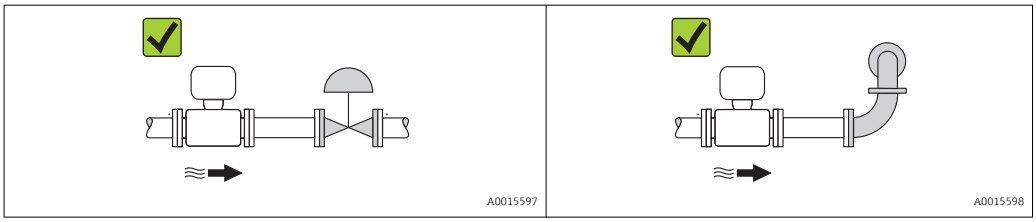

Installation dimensions

For the dimensions and installation lengths of the device, see the "Technical Information" document, "Mechanical construction" section

6.1.2 Requirements from environment and process

Ambient temperature range

Measuring device	▪ −40 to +60 °C (−40 to +140 °F) ▪ −50 to +60 °C (−58 to +140 °F) (Order code for "Test, certificate", option JM
Safety Barrier Promass 100	−40 to +60 °C (−40 to +140 °F)

▶ If operating outdoors:
Avoid direct sunlight, particularly in warm climatic regions.

System pressure

It is important that cavitation does not occur, or that gases entrained in the liquids do not outgas.

Cavitation is caused if the pressure drops below the vapor pressure:
- In liquids that have a low boiling point (e.g. hydrocarbons, solvents, liquefied gases)
- In suction lines

▶ Ensure the system pressure is sufficiently high to prevent cavitation and outgassing.

For this reason, the following mounting locations are recommended:
- At the lowest point in a vertical pipe
- Downstream from pumps (no danger of vacuum)

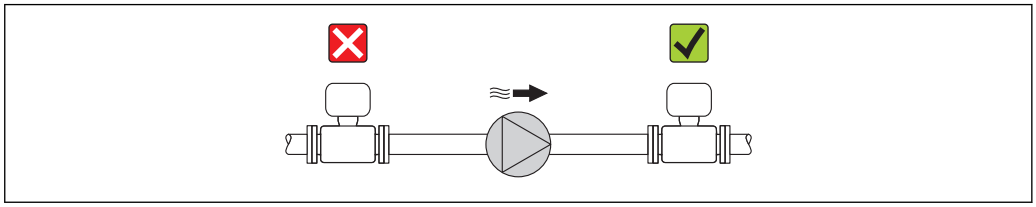

Thermal insulation

In the case of some fluids, it is important that the heat radiated from the sensor to the transmitter is kept to a minimum. A wide range of materials can be used for the required insulation.

NOTICE

Electronics overheating on account of thermal insulation!

- Observe maximum permitted insulation height of the transmitter neck so that the transmitter head is completely free.

Heating

NOTICE

Electronics can overheat due to elevated ambient temperature!

- Observe maximum permitted ambient temperature for the transmitter (→ 19).
- Depending on the fluid temperature, take the device orientation requirements into account .

Heating options

If a fluid requires that no heat loss should occur at the sensor, users can avail of the following heating options:
- Electrical heating, e.g. with electric band heaters
- Via pipes carrying hot water or steam
- Via heating jackets

Using an electrical trace heating system

If heating is regulated via phase angle control or pulse packages, magnetic fields can affect the measured values (= for values that are greater than the values approved by the EN standard (sine 30 A/m)).

For this reason, the sensor must be magnetically shielded: the housing can be shielded with tin plates or electric sheets without a privileged direction (e.g. V330-35A).

The sheet must have the following properties:
- Relative magnetic permeability μr ≥ 300
- Plate thickness d ≥ 0.35 mm (d ≥ 0.014 in)

Vibrations

The high oscillation frequency of the measuring tubes ensures that the correct operation of the measuring system is not influenced by plant vibrations.

6.1.3 Special mounting instructions

Outlet run for peripheral device

If a pressure and temperature measuring device are installed downstream from the measuring device, make sure there is sufficient distance between the two devices.

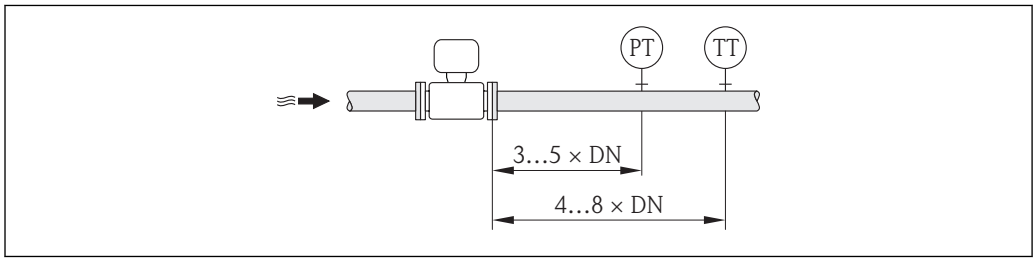

A0016893

PT Pressure transmitter
TT Temperature transmitter

Guarantees complete drainability

When the sensor is installed in a horizontal line, eccentric clamps can be used to ensure complete drainability. When the system is pitched in a specific direction and at a specific slope, gravity can be used to achieve complete drainability. The sensor must be mounted in the correct position to ensure full drainability in the horizontal position. Markings on the sensor show the correct mounting position to optimize drainability.

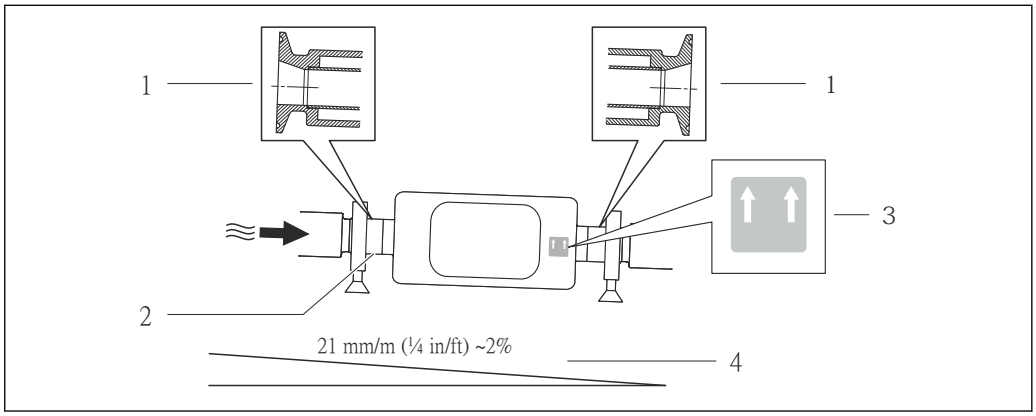

A0016583

1 *Eccentric clamp connection*
2 *Line on the underside indicates the lowest point of the eccentric process connection.*
3 *"This side up" label indicates which side is up*
4 *Slope the device in accordance with the hygiene guidelines. Slope: approx. 2 % or 21mm/m (0.24 in/feet)*

Securing with mounting clamp in the case of hygiene connections

It is not necessary to provide additional support for the sensor for operational performance purposes. If, however, additional support is required for installation purposes, the following dimensions must be observed.

Use mounting clamp with lining between clamp and measuring instrument.

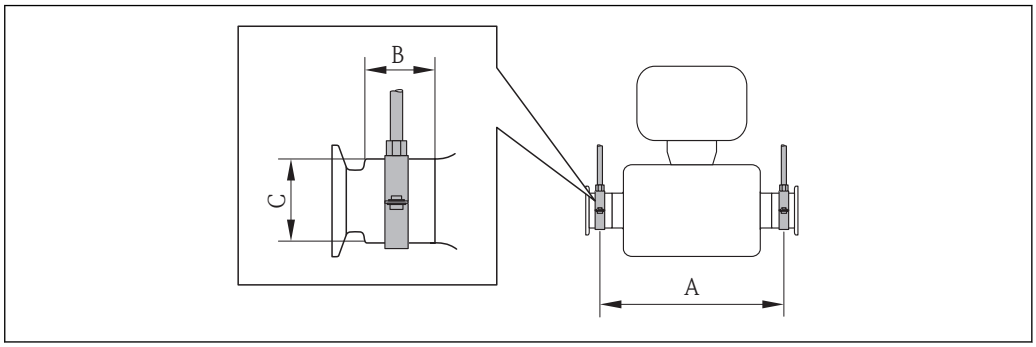

A0016588

SI units

DN [mm]	8	15	25	40	50
A [mm]	298	402	542	750	1019
B [mm]	33	33	33	36.5	44.1
C [mm]	28	28	38	56	75

US units

DN [in]	⅜	½	1	1 ½	2
A [in]	11.73	15.83	21.34	29.53	40.12
B [in]	1.3	1.3	1.3	1.44	1.74
C [in]	1.1	1.1	1.5	2.2	2.95

Zero point adjustment

All measuring devices are calibrated in accordance with state-of-the-art technology. The zero point obtained in this way is printed on the nameplate of the measuring device. Calibration takes place under reference conditions (→ 🗎 81). Therefore, a zero point adjustment in the field is generally not required!)

Experience shows that zero point adjustment is advisable only in special cases:
- To achieve maximum measuring accuracy even with very low flow rates
- Under extreme process or operating conditions, e.g.:
  - high process temperature (> 50 °C (122 °F)
  - high viscosity (> 100 cSt)
  - high process pressure (> 20 bar (290 psi))

6.2 Mounting the measuring device

6.2.1 Required tools

For sensor

For flanges and other process connections: Corresponding mounting tools

6.2.2 Preparing the measuring device

1. Remove all remaining transport packaging.
2. Remove any protective covers or protective caps present from the sensor.
3. Remove stick-on label on the electronics compartment cover.

6.2.3 Mounting the measuring device

⚠ WARNING

Danger due to improper process sealing!
- ▶ Ensure that the inside diameters of the gaskets are greater than or equal to that of the process connections and piping.
- ▶ Ensure that the gaskets are clean and undamaged.
- ▶ Install the gaskets correctly.

1. Ensure that the direction of the arrow on the nameplate of the sensor matches the flow direction of the fluid.
2. Install the measuring device or turn the transmitter housing so that the cable entries do not point upwards.

↳

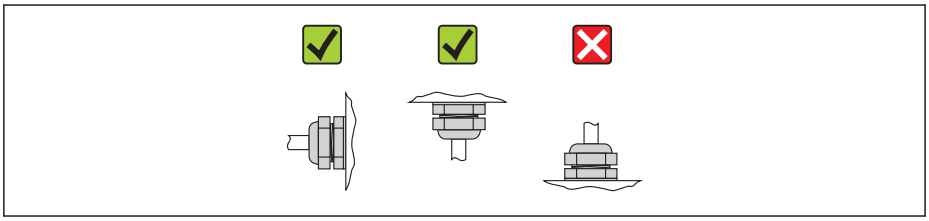

A0013964

6.3 Post-installation check

Is the device damaged (visual inspection)?	→
Does the measuring device conform to the measuring point specifications? For example: ▪ Process temperature (→ 🗎 85) ▪ Process pressure (refer to the chapter on "Material load curves" of the "Technical Information" document) ▪ Ambient temperature (→ 🗎 19) ▪ Measuring range (→ 🗎 76)	→
Has the correct orientation for the sensor been selected ? ▪ According to sensor type ▪ According to medium temperature ▪ According to medium properties (outgassing, with entrained solids)	→
Does the arrow on the sensor nameplate match the direction of flow of the fluid through the piping (→ 🗎 18)?	→
Are the measuring point identification and labeling correct (visual inspection)?	→
Is the device adequately protected from precipitation and direct sunlight?	→
Are the securing screw and securing clamp tightened securely?	→

7 Electrical connection

7.1 Connection conditions

7.1.1 Required tools

- For cable entries: Use corresponding tools
- For securing clamp (on aluminum housing): Allen screw 3 mm
- For securing screw (for stainless steel housing): open-ended wrench 8 mm
- Wire stripper
- When using stranded cables: Crimping tool for wire end ferrule

7.1.2 Requirements for connecting cable

The connecting cables provided by the customer must fulfill the following requirements.

Electrical safety

In accordance with applicable federal/national regulations.

Permitted temperature range

- −40 °C (−40 °F)...≥ 80 °C (176 °F)
- Minimum requirement: cable temperature range ≥ ambient temperature + 20 K

Power supply cable

Standard installation cable is sufficient.

Signal cable

Modbus RS485

The EIA/TIA-485 standard specifies two types of cable (A and B) for the bus line which can be used for every transmission rate. Cable type A is recommended.

Cable type	A
Characteristic impedance	135 to 165 Ωat a measuring frequency of 3 to 20 MHz
Cable capacitance	< 30 pF/m
Wire cross-section	> 0.34 mm^2 (22 AWG)
Cable type	Twisted pairs
Loop resistance	≤ 110 Ω/km
Signal damping	Max. 9 dB over the entire length of the cable cross-section
Shielding	Copper braided shielding or braided shielding with foil shield. When grounding the cable shield, observe the grounding concept of the plant.

Connecting cable between Safety Barrier Promass 100 and measuring device

Cable type	Shielded twisted-pair cable with 2x2 wires. When grounding the cable shield, observe the grounding concept of the plant.
Maximum cable resistance	2.5 Ω, one side

▶ Comply with the maximum cable resistance specifications to ensure the operational reliability of the measuring device.

The maximum cable length for individual wire cross-sections is specified in the table below. Observe the maximum capacitance and inductance per unit length of the cable and the connection values in the Ex documentation (→ 92).

Wire cross-section		Maximum cable length	
[mm²]	[AWG]	[m]	[ft]
0.5	20	70	230
0.75	18	100	328
1.0	17	100	328
1.5	16	200	656
2.5	14	300	984

Cable diameter

- Cable glands supplied:
  M20 × 1.5 with cable ϕ 6 to 12 mm (0.24 to 0.47 in)
- Spring terminals:
  wire cross-sections 0.5 to 2.5 mm² (20 to 14 AWG)
- With Safety Barrier Promass 100:
  Plug-in screw terminals for wire cross-sections 0.5 to 2.5 mm2 (20 to 14 AWG)

7.1.3 Terminal assignment

Transmitter

Connection version Modbus RS485, for use in non-hazardous areas and Zone 2/Div. 2

Order code for "Output", option **M**

Depending on the housing version, the transmitters can be ordered with terminals or device plugs.

Order code for "Housing"	Connection methods available		Possible options for order code "Electrical connection"
	Output	Power supply	
Options **A**, **B**	Terminals	Terminals	▪ Option **A**: coupling M20x1 ▪ Option **B**: thread M20x1 ▪ Option **C**: thread G ½" ▪ Option **D**: thread NPT ½"
Options **A**, **B**	Device plug (→ 🗎 28)	Terminals	▪ Option **L**: plug M12x1 + thread NPT ½" ▪ Option **N**: plug M12x1 + coupling M20 ▪ Option **P**: plug M12x1 + thread G ½" ▪ Option **U**: plug M12x1 + thread M20
Options **A**, **B**, **C**	Device plug (→ 🗎 28)	Device plug (→ 🗎 28)	Option **Q**: 2 x plug M12x1
Order code for "Housing": ▪ Option **A**: compact, coated alu ▪ Option **B**: compact hygienic, stainless ▪ Option **C**: ultra compact hygienic, stainless, M12 device plug			

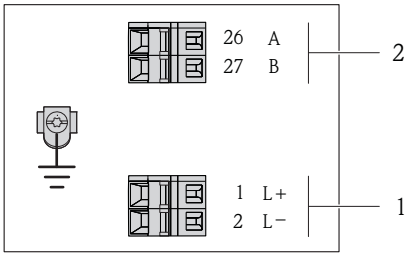

A0019528

7 Modbus RS485 terminal assignment, connection version for use in non-hazardous areas and Zone 2/Div. 2

1 Power supply: DC 24 V
2 Output: Modbus RS485

Order code for "Output"	Terminal number			
	Power supply		Output	
	2 (L-)	1 (L+)	27 (B)	26 (A)
Option **M**	24 DC V		Modbus RS485	
Order code for "Output": Option **M**: Modbus RS485, for use in non-hazardous areas and Zone 2/Div. 2				

Connection version Modbus RS485, for use in intrinsically safe areas (connection via Safety Barrier Promass 100)

Order code for "Output", option **M**: Modbus R485, for use in intrinsically safe areas (connection via Safety Barrier Promass 100)

Depending on the housing version, the transmitters can be ordered with terminals or device plugs.

Order code for "Housing"	Connection methods available		Possible options for order code "Electrical connection"
	Output	Power supply	
Options **A**, **B**	Terminals	Terminals	▪ Option **A**: coupling M20x1 ▪ Option **B**: thread M20x1 ▪ Option **C**: thread G ½" ▪ Option **D**: thread NPT ½"
A, **B**, **C**	Device plug (→ 28)		Option **I**: plug M12x1
Order code for "Housing": ▪ Option **A**: compact, coated alu ▪ Option **B**: compact hygienic, stainless ▪ Option **C**: ultra compact hygienic, stainless, M12 device plug			

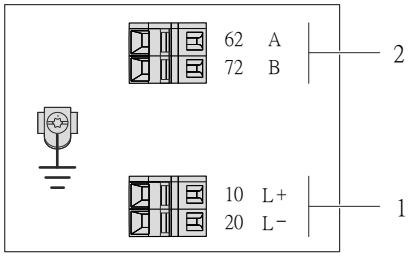

A0017053

8 Modbus RS485 terminal assignment, connection version for use in intrinsically safe areas (connection via Safety Barrier Promass 100)

1 Intrinsically safe power supply
2 Output: Modbus RS485

Order code for "Output"	20 (L-)	10 (L+)	72 (B)	62 (A)
Option **M**	Intrinsically safe supply voltage		Modbus RS485 intrinsically safe	
Order code for "Output": Option **M**: Modbus RS485, for use in intrinsically safe areas (connection via Safety Barrier Promass 100)				

Safety Barrier Promass 100

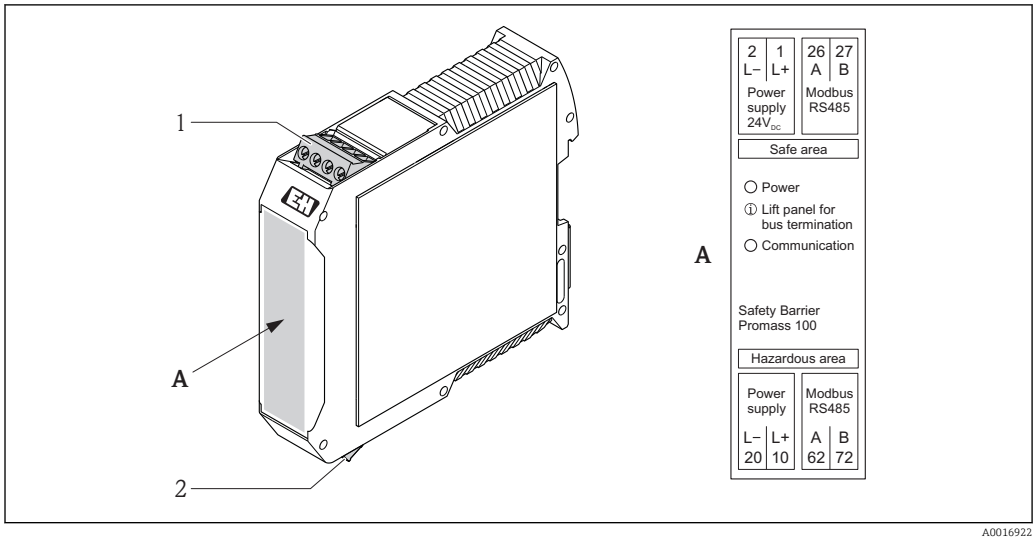

9 Safety Barrier Promass 100 with terminals

1 Non-hazardous area and Zone 2/Div. 2
2 Intrinsically safe area

7.1.4 Pin assignment, device plug

Modbus RS485

Modbus RS485 intrinsically safe with supply voltage (on the device side)

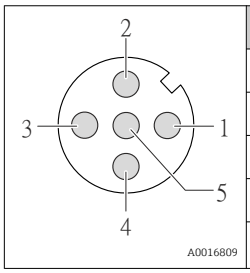

Pin	Assignment		Coding	Plug/socket
1	L+	Supply voltage, intrinsically safe	A	Plug
2	A	Modbus RS485 intrinsically safe		
3	B			
4	L-	Supply voltage, intrinsically safe		
5		Grounding/shielding		

Supply voltage for Modbus RS485, non-hazardous area and Zone 2/Div. 2 (on the device side)

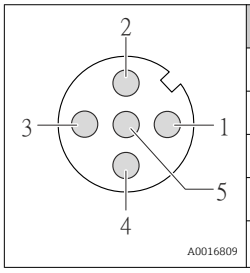

Pin	Assignment		Coding	Plug/socket
1	L+	DC24 V	A	Plug
2				
3				
4	L-	DC24 V		
5		Grounding/shielding		

Modbus RS485, non-hazardous areas and zone 2/Div. 2 (on the device side)

	Pin	Assignment		Coding	Plug/socket
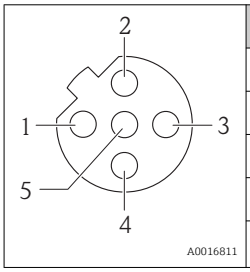	1			B	Socket
	2	A	Modbus RS485		
	3				
	4	B	Modbus RS485		
	5		Grounding/shielding		

7.1.5 Shielding and grounding

The shielding and grounding concept requires compliance with the following:
- Electromagnetic compatibility (EMC)
- Explosion protection
- Personal protection equipment
- National installation regulations and guidelines
- Observe cable specification (→ 📄 24).
- Keep the stripped and twisted lengths of cable shield to the ground terminal as short as possible.
- Seamless cable shielding.

Grounding of the cable shield
To comply with EMC requirements:
- Ensure the cable shield is grounded to the potential matching line at multiple points.
- Connect every local ground terminal to the potential matching line.

NOTICE
In systems without potential matching, the multiple grounding of the cable shield causes mains frequency equalizing currents!
Damage to the bus cable shield.
- ▶ Only ground the bus cable shield to either the local ground or the protective ground at one end.

7.1.6 Preparing the measuring device

1. Remove dummy plug if present.
2. **NOTICE!** Insufficient sealing of the housing! Operational reliability of the measuring device could be compromised. Use suitable cable glands corresponding to the degree of protection.
   If measuring device is delivered without cable glands:
   Provide suitable cable gland for corresponding connecting cable (→ 📄 24).
3. If measuring device is delivered with cable glands:
   Observe cable specification (→ 📄 24).

7.2 Connecting the measuring device

NOTICE
Limitation of electrical safety due to incorrect connection!
- ▶ Have electrical connection work carried out by correspondingly trained specialists only.
- ▶ Observe applicable federal/national installation codes and regulations.
- ▶ Comply with local workplace safety regulations.
- ▶ For use in potentially explosive atmospheres, observe the information in the device-specific Ex documentation.

7.2.1 Connecting the transmitter

The connection of the transmitter depends on the following order codes:
- Housing version: compact or ultracompact
- Connection version: device plug or terminals

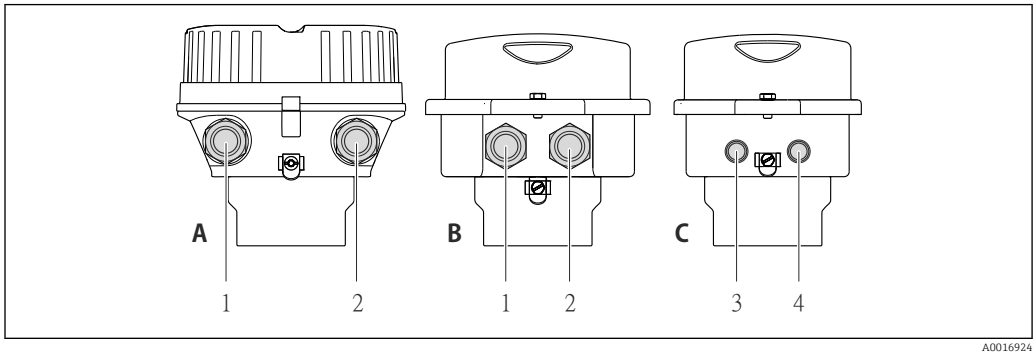

10 Device versions and connection versions

A Housing version: compact, aluminum coated
B Housing version: compact hygienic, stainless
1 Cable entry or device plug for signal transmission
2 Cable entry or device plug for supply voltage
C Housing version: ultra-compact hygienic, stainless, device plug M12
3 Device plug for signal transmission
4 Device plug for supply voltage

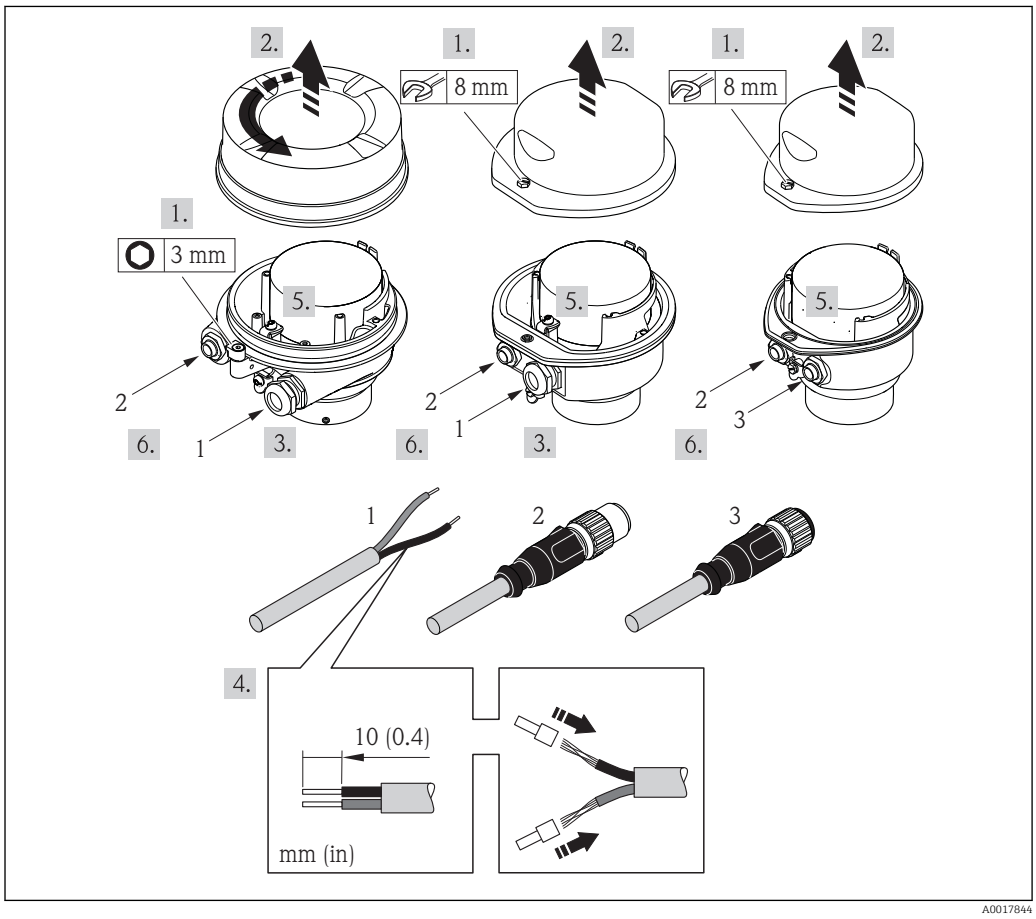

11 Device versions with connection examples

1 Cable
2 Device plug for signal transmission
3 Device plug for supply voltage

For device version with device plug: only pay attention to Step 6.

1. Depending on the housing version, loosen the securing clamp or fixing screw of the housing cover.
2. Depending on the housing version, unscrew or open the housing cover.
3. Push the cable through the cable entry . To ensure tight sealing, do not remove the sealing ring from the cable entry.
4. Strip the cable and cable ends. In the case of stranded cables, also fit ferrules.
5. Connect the cable in accordance with the terminal assignment or the device plug pin assignment (→ 📄 28).
6. Depending on the device version: tighten the cable glands or plug in the device plug and tighten (→ 📄 28).
7. Enable the terminating resistor if applicable (→ 📄 32).
8. **NOTICE!** Housing degree of protection voided due to insufficient sealing of the housing. Screw in the screw without using any lubricant. The threads on the cover are coated with a dry lubricant.
   Reverse the removal procedure to reassemble the transmitter.

7.2.2 Connecting the Safety Barrier Promass 100

In the case of the device version with Modbus RS485 intrinsically safe, the transmitter must be connected to the Safety Barrier Promass 100.

1. Strip the cable ends. In the case of stranded cables, also fit ferrules.
2. Connect the cable in accordance with the terminal assignment (→ 📄 28).
3. Where applicable, enable the terminating resistor in the Safety Barrier Promass 100 (→ 📄 32).

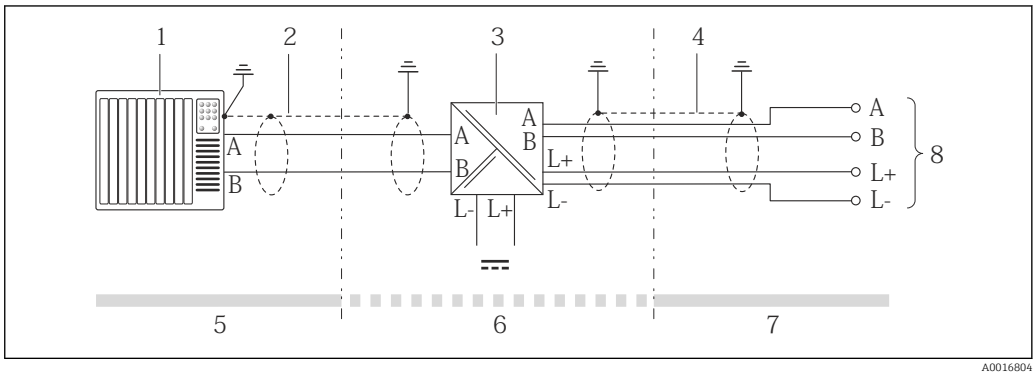

12 *Electrical connection between the transmitter and Safety Barrier Promass 100*

1 *Control system (e.g. PLC)*
2 *Observe cable specification*
3 *Safety Barrier Promass 100: terminal assignment (→ 📄 28)*
4 *Observe cable specification (→ 📄 24)*
5 *Non-hazardous area*
6 *Non-hazardous area and Zone 2/Div. 2*
7 *Intrinsically safe area*
8 *Transmitter: terminal assignment*

7.3 Hardware settings

7.3.1 Enabling the terminating resistor

To avoid incorrect communication transmission caused by impedance mismatch, connect the Modbus RS485 cable correctly to the start and end of the bus segment.

If the transmitter is used in the non-hazardous area or Zone 2/Div. 2

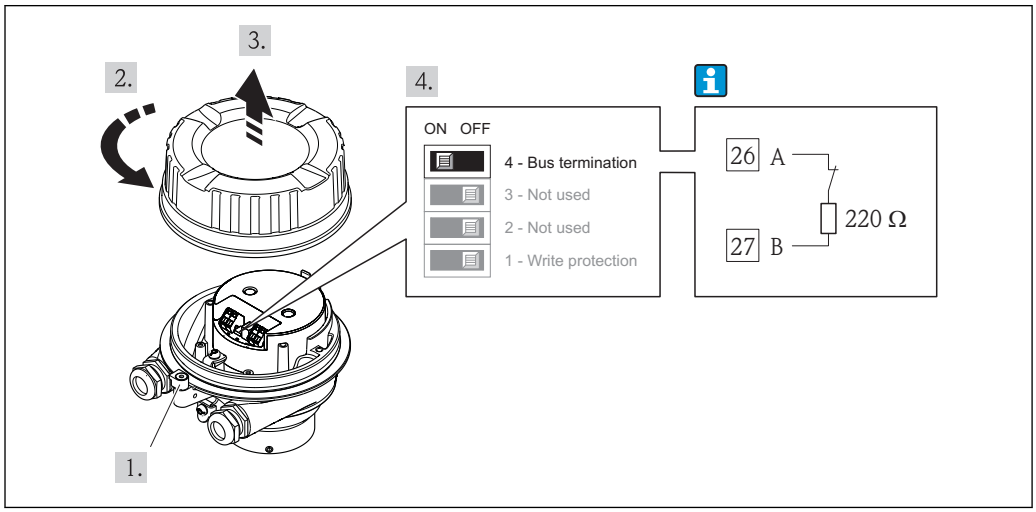

13 *Terminating resistor can be enabled via DIP switch on the main electronics module*

If the transmitter is used in the intrinsically safe area

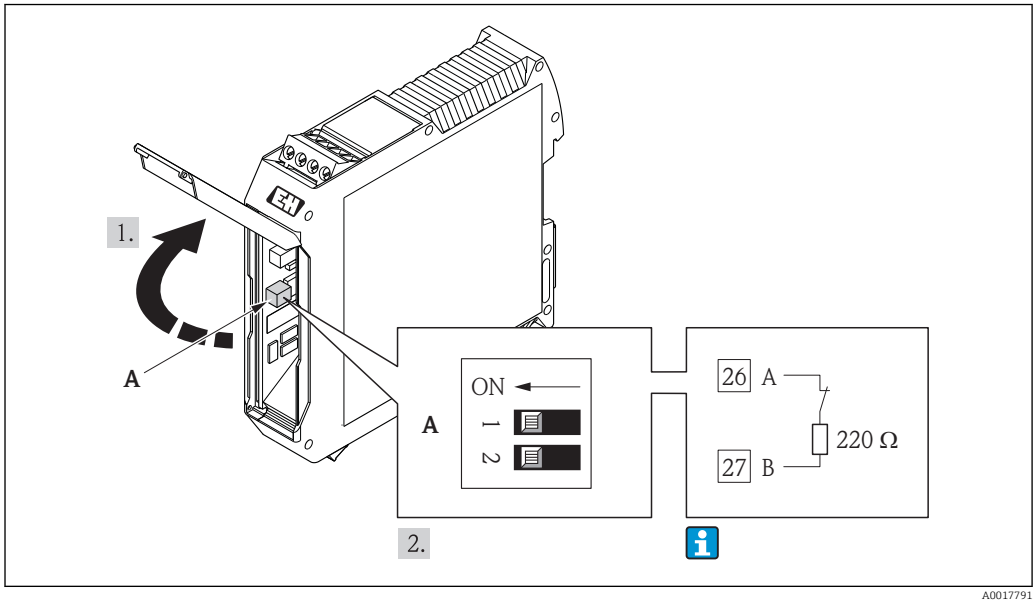

14 *Terminating resistor can be enabled via DIP switch in the Safety Barrier Promass 100*

7.4 Ensuring the degree of protection

The measuring device fulfills all the requirements for the IP66/67 degree of protection, Type 4X enclosure.

To guarantee IP66/67 degree of protection, Type 4X enclosure, carry out the following steps after the electrical connection:

1. Check that the housing seals are clean and fitted correctly. Dry, clean or replace the seals if necessary.
2. Tighten all housing screws and screw covers.
3. Firmly tighten the cable glands.
4. To ensure that moisture does not enter the cable entry, route the cable so that it loops down before the cable entry ("water trap").

   ↳

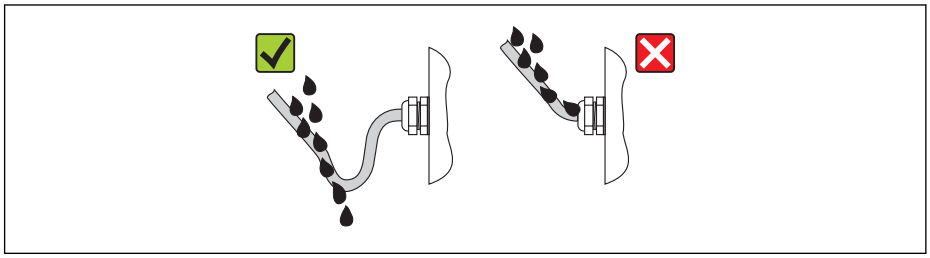

A0013960

5. Insert dummy plugs into unused cable entries.

7.5 Post-connection check

Are cables or the device undamaged (visual inspection)?	❑
Do the cables comply with the requirements (→ 🗎 24)?	❑
Do the cables have adequate strain relief?	❑
Are all the cable glands installed, firmly tightened and leak-tight? Cable run with "water trap" (→ 🗎 32) ?	❑
Depending on the device version: are all the device plugs firmly tightened (→ 🗎 30)?	❑
▪ Does the supply voltage match the specifications on the transmitter nameplate (→ 🗎 79)? ▪ For device version with Modbus RS485 intrinsically safe: does the supply voltage match the specifications on the nameplate of the Safety Barrier Promass 100 (→ 🗎 79)?	❑
Is the terminal assignment or the pin assignment of the device plug (→ 🗎 28) correct?	❑
▪ If supply voltage is present, is the power LED on the electronics module of the transmitter lit green (→ 🗎 10)? ▪ For device version with Modbus RS485 intrinsically safe, if supply voltage is present, is the power LED on the Safety Barrier Promass 100 lit (→ 🗎 10)?	❑
Depending on the device version, is the securing clamp or fixing screw firmly tightened?	❑

8 Operation options

8.1 Overview of operation options

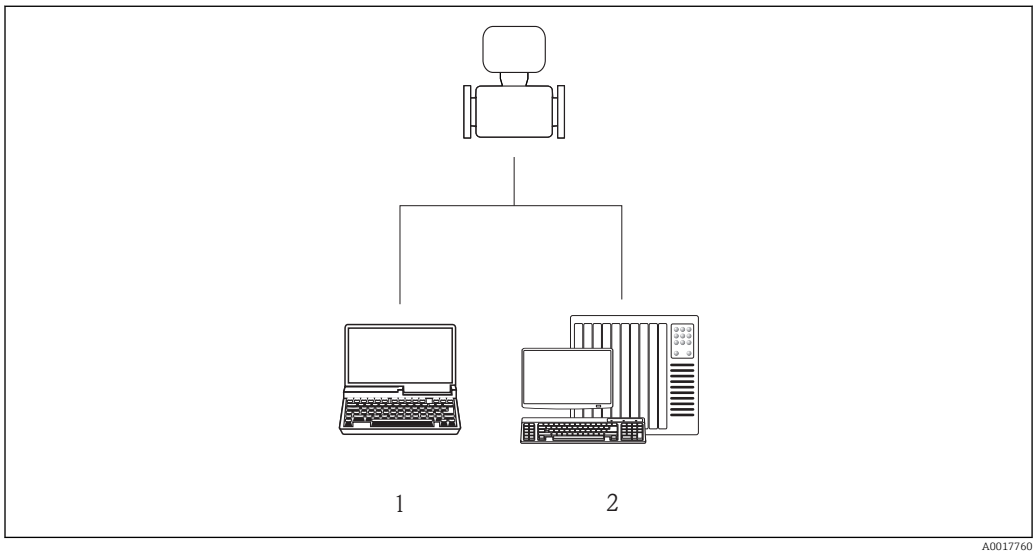

1 Computer with "FieldCare" operating tool via Commubox FXA291 and service interface (CDI)
2 Control system (e.g. PLC)

8.2 Structure and function of the operating menu

8.2.1 Structure of the operating menu

For an overview of the operating menu with menus and parameters (→ 93)

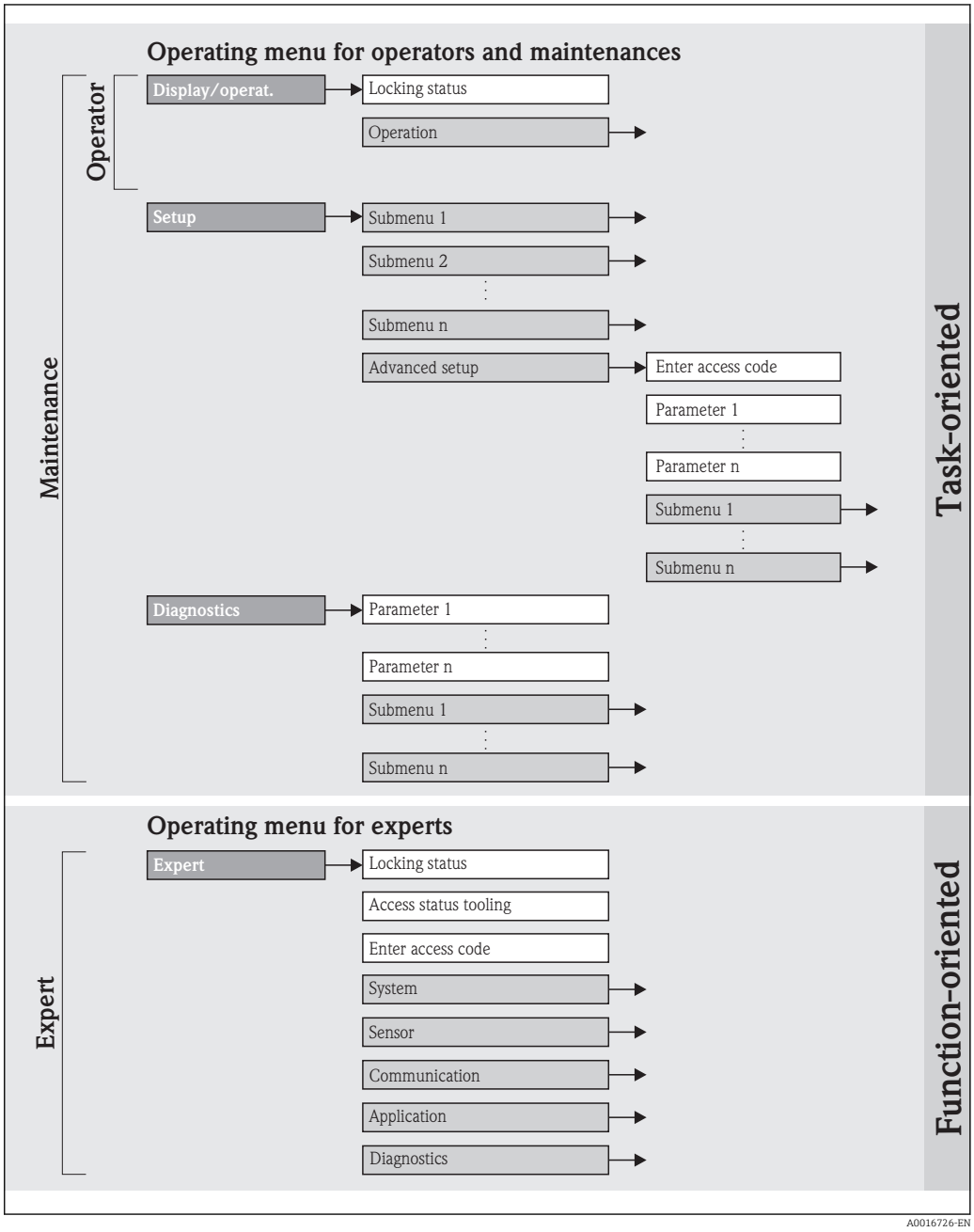

15 *Taking the example of the "FieldCare" operating tool*

8.2.2 Operating philosophy

The individual parts of the operating menu are assigned to certain user roles. Each user role corresponds to typical tasks within the device lifecycle.

Menu		User role and tasks	Content/meaning
Display/operat.	task-oriented	**Role "Operator", "Maintenance"** Tasks during operation: Reading measured values	Resetting and controlling totalizers
Setup		**"Maintenance" role** Commissioning: ▪ Configuration of the measurement ▪ Configuration of the communication interface	Submenus for fast commissioning: ▪ Setting the individual system units ▪ Defining the medium ▪ Configuration of the digital communication interface ▪ Configuring the low flow cut off ▪ Configuring the monitoring of partial and empty pipe detection "Advanced setup" submenu: ▪ For more customized configuration of the measurement (adaptation to special measuring conditions) ▪ Configuration of totalizers
Diagnostics		**"Maintenance" role** Fault elimination: ▪ Diagnostics and elimination of process and device errors ▪ Measured value simulation	Contains all parameters for error detection and analyzing process and device errors: ▪ **"Diagnostic list" submenu** Contains up to 5 currently pending diagnostic messages. ▪ **"Event logbook" submenu** Contains 20 event messages that have occurred. ▪ **"Device information" submenu** Contains information for identifying the device. ▪ **"Measured values" submenu** Contains all current measured values. ▪ **"Simulation" submenu** Is used to simulate measured values or output values. ▪ **"Device reset" submenu** Resets the device configuration to certain settings
Expert	function-oriented	Tasks that require detailed knowledge of the function of the device: ▪ Commissioning measurements under difficult conditions ▪ Optimal adaptation of the measurement to difficult conditions ▪ Detailed configuration of the communication interface ▪ Error diagnostics in difficult cases	Contains all the parameters of the device and makes it possible to access these parameters directly using an access code. The structure of this menu is based on the function blocks of the device: ▪ **"System" submenu** Contains all higher-order device parameters that do not pertain either to measurement or the measured value communication. ▪ **"Sensor" submenu** Contains all parameters for configuring the measurement. ▪ **"Communication" submenu** Contains all parameters for configuring the digital communication interface. ▪ **"Application" submenu** Contains all parameters for configuring the functions that go beyond the actual measurement (e.g. totalizer). ▪ **"Diagnostics" submenu** Contains all parameters for error detection and analyzing process and device errors and for device simulation.

8.3 Access to the operating menu via the operating tool

8.3.1 Connecting the operating tool

Via service interface (CDI)

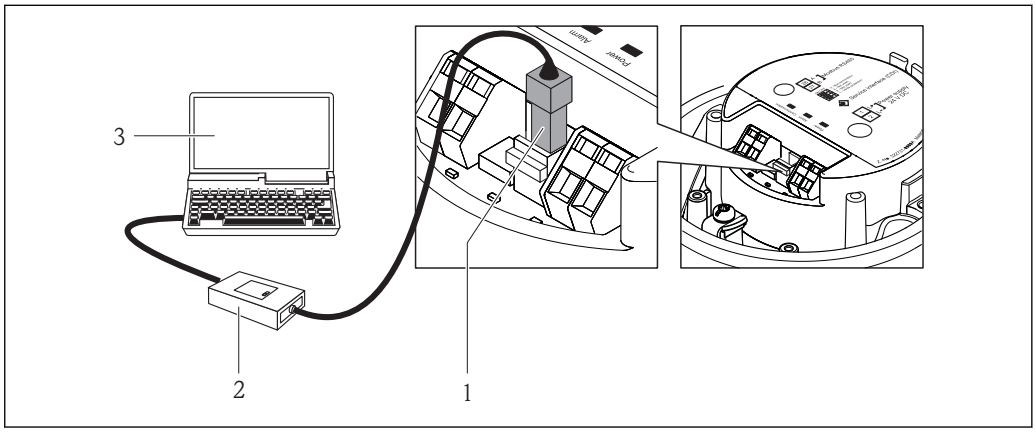

1 *Service interface (CDI) of the measuring device*
2 *Commubox FXA291*
3 *Computer with "FieldCare" operating tool with COM DTM "CDI Communication FXA291"*

8.3.2 FieldCare

Function scope

FDT-based plant asset management tool from Endress+Hauser. It can configure all smart field units in a system and helps you manage them. By using the status information, it is also a simple but effective way of checking their status and condition.

Access takes place via:
Service interface CDI (→ 37)

Typical functions:
- Configuring parameters of transmitters
- Loading and saving device data (upload/download)
- Documentation of the measuring point
- Visualization of the measured value memory (line recorder) and event logbook

For details, see Operating Instructions BA00027S and BA00059S

Source for device description files

See data (→ 39)

Establishing a connection

Via service interface (CDI)

1. Start FieldCare and launch the project.
2. In the network: Add a device.
   ↳ The **Add device** window opens.
3. Select the **CDI Communication FXA291** option from the list and press **OK** to confirm.
4. Right-click **CDI Communication FXA291** and select the **Add device** option in the context menu that opens.

5. Select the desired device from the list and press **OK** to confirm.
6. Establish the online connection to the device.

For details, see Operating Instructions BA00027S and BA00059S

User interface

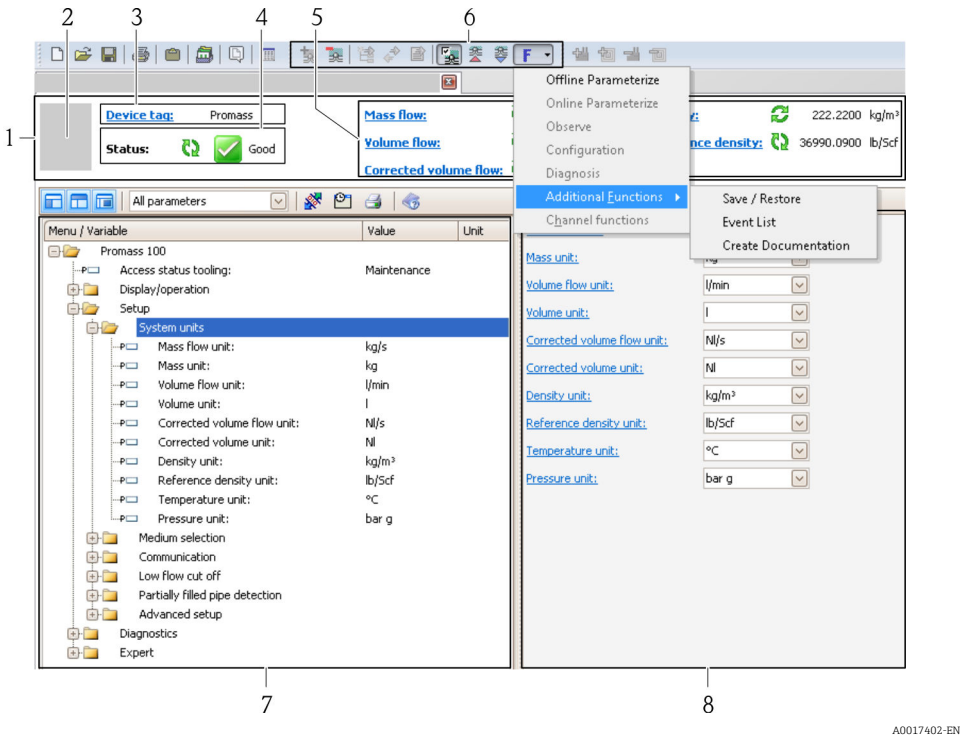

1	*Header*
2	*Picture of device*
3	*Device tag (→ 📄 57)*
4	*Status area with status signal (→ 📄 63)*
5	*Display area for current measured values (→ 📄 57)*
6	*Event list with additional functions such as save/load, events list and document creation*
7	*Navigation area with operating menu structure*
8	*Working area*

9 System integration

9.1 Overview of device description files

9.1.1 Current version data for the device

Firmware version	01.02.00	▪ On the title page of the Operating instructions ▪ On transmitter nameplate (→ 🗎 12) ▪ Parameter **firmware version** Diagnostics → Device info → Firmware version
Release date of firmware version	04.2013	---

9.1.2 Operating tools

The suitable device description file for the operating tool is listed in the table below, along with information on where the file can be acquired.

Operating tool via service interface (CDI)	Sources for obtaining device descriptions
FieldCare	▪ www.endress.com → Download Area ▪ CD-ROM (contact Endress+Hauser) ▪ DVD (contact Endress+Hauser)

9.2 Modbus RS485 information

9.2.1 Function codes

Function codes are used to define which read or write action is carried out via the Modbus protocol. The measuring device supports the following function codes:

Code	Name	Description	Application
03	Read holding register	Master reads one or more Modbus registers from the device. A maximum of 125 consecutive registers can be read with 1 telegram: 1 register = 2 bytes ℹ The measuring device does not make a distinction between function codes 03 and 04; these codes therefore yield the same result.	Read device parameters with read and write access Example: Read mass flow
04	Read input register	Master reads one or more Modbus registers from the device. A maximum of 125 consecutive registers can be read with 1 telegram: 1 register = 2 bytes ℹ The measuring device does not make a distinction between function codes 03 and 04; these codes therefore yield the same result.	Read device parameters with read access Example: Read totalizer value

Code	Name	Description	Application
06	Write single registers	Master writes a new value to **one** Modbus register of the measuring device. Use function code 16 to write multiple registers with just 1 telegram.	Write only 1 device parameter Example: reset totalizer
08	Diagnostics	Master checks the communication connection to the measuring device. The following "Diagnostics codes" are supported: ▪ Sub-function 00 = Return query data (loopback test) ▪ Sub-function 02 = Return diagnostics register	
16	Write multiple registers	Master writes a new value to multiple Modbus registers of the device. A maximum of 120 consecutive registers can be written with 1 telegram. If the required device parameters are not available as a group, yet must nevertheless be addressed with a single telegram, use Modbus data map (→ 40)	Write multiple device parameters Example: ▪ Mass flow unit ▪ Mass unit
23	Read/Write multiple registers	Master reads and writes a maximum of 118 Modbus registers of the measuring device simultaneously with 1 telegram. Write access is executed **before** read access.	Write and read multiple device parameters Example: ▪ Read mass flow ▪ Reset totalizer

Broadcast messages are only allowed with function codes 06, 16 and 23.

9.2.2 Register information

For an overview on Modbus-specific information of the individual device parameters, please refer to the additional document on Modbus RS485 register information (→ 92)

9.2.3 Response time

Response time of the measuring device to the request telegram of the Modbus master: typically 3 to 5 ms

9.2.4 Modbus data map

Function of the Modbus data map

The device offers a special memory area, the Modbus data map (for a maximum of 16 device parameters), to allow users to call up multiple device parameters via Modbus RS485 and not only individual device parameters or a group of consecutive device parameters.

Grouping of device parameters is flexible and the Modbus master can read or write to the entire data block simultaneously with a single request telegram.

Structure of the Modbus data map

The Modbus data map consists of two data sets:
- Scan list: Configuration area
  The device parameters to be grouped are defined in a list in that their Modbus RS485 register addresses are entered in the list.
- Data area
  The measuring device reads out the register addresses entered in the scan list cyclically and writes the associated device data (values) to the data area.

For an overview of device parameters with their individual Modbus register address, please refer to the additional document on Modbus RS485 register information (→ 92)

Scan list configuration

For configuration, the Modbus RS485 register addresses of the device parameters to be grouped must be entered in the scan list. Please note the following basic requirements of the scan list:

Max. entries	16 device parameters
Supported device parameters	Only parameters with the following characteristics are supported: ▪ Access type: read or write access ▪ Data type: float or integer

Configuring the scan list via FieldCare

Carried out using the operating menu of the measuring device:
Expert → Communication → Modbus data map → Scan list register 0 -15

Scan list	
No.	**Configuration register**
0	Scan list register 0
...	...
15	Scan list register 15

Configuring the scan list via Modbus RS485

Carried out using register addresses 5001 - 5016

Scan list			
No.	**Modbus RS485 register**	**Data type**	**Configuration register**
0	5001	Integer	Scan list register 0
...	...	Integer	...
15	5016	Integer	Scan list register 15

Reading out data via Modbus RS485

The Modbus master accesses the data area of the Modbus data map to read out the current values of the device parameters defined in the scan list.

Master access to data area	Via register addresses 5051-5081

Data area			
Device parameter value	**Modbus RS485 register**	**Data type***	**Access****
Value of scan list register 0	5051	Integer/float	Read/write
Value of scan list register 1	5053	Integer/float	Read/write
Value of scan list register ...	...	...	...
Value of scan list register 15	5081	Integer/float	Read/write

***** Data type depends on the device parameters entered in the scan list.
****** Data access depends on the device parameters entered in the scan list. If the device parameter entered supports read and write access, the parameter can also be accessed via the data area.

10 Commissioning

10.1 Function check

Before commissioning the device, make sure that the post-installation and post-connection checks have been performed.

- "Post-mounting check" checklist (→ 📄 23)
- "Post-connection check" checklist (→ 📄 33)

10.2 Establishing a connection via FieldCare

- For FieldCare connection (→ 📄 37)
- For establishing a connection via FieldCare (→ 📄 37)
- For FieldCare user interface (→ 📄 38)

10.3 Configuring the measuring device

The **Setup** menu with its submenus contains all parameters needed for standard operation.

Structure of the "Setup" menu

Setup	→	**System units**	(→ 📄 43)
		Select medium	(→ 📄 46)
		Communication	(→ 📄 47)
		Low flow cut off	(→ 📄 49)
		Partially filled pipe detection	(→ 📄 50)

10.3.1 Setting the system units

In the **System units** submenu, you can configure the units of all measured values.

Navigation path
"Setup" menu → Advanced setup → System units

Structure of the submenu

System units	→	Mass flow unit
		Mass unit
		Volume flow unit
		Volume unit
		Corrected volume flow unit
		Corrected volume unit
		Density unit
		Reference density unit

Temperature unit
Pressure unit

Parameter overview with brief description

Parameter	Description	Selection/ User entry	Factory setting
Mass flow unit	Select the unit for mass flow. *Result* The selected unit applies for: – Output – Low flow cut off – Simulation process variable	Unit choose list	Country-dependent: ▪ kg/h ▪ lb/min
Mass unit	Select the unit for mass. *Result* The selected unit is taken from: Mass flow unit	Unit choose list	Country-dependent: ▪ kg ▪ lb
Volume flow unit	Select the unit for volume flow. *Result* The selected unit applies for: – Output – Low flow cut off – Simulation process variable	Unit choose list	Country-dependent: ▪ l/h ▪ gal/min (us)
Volume	Select the unit for volume. *Result* The selected unit is taken from: Volume flow unit		Country-dependent ▪ l ▪ gal (us)
Corrected volume flow unit	Select the unit for corrected volume flow. *Result* The selected unit applies for: – Output – Low flow cut off – Simulation process variable	Unit choose list	Country-dependent: ▪ Nl/h ▪ Scf/min
Corrected volume unit	Select the unit for standard volume. *Result* The selected unit is taken from: Corrected volume flow unit	Unit choose list	Country-dependent: ▪ Nl ▪ Scf
Density unit	Select the unit for density. *Result* The selected unit applies for: – Output – Low value partial filled pipe detection – High value partial filled pipe detection – Simulation process variable – Density adjustment (in the **Expert** menu)	Unit choose list	Country-dependent ▪ kg/l ▪ lb/cf
Reference density unit	Select the unit for reference density. *Result* The selected unit applies for: – Output – Low value partial filled pipe detection – High value partial filled pipe detection – Simulation process variable – Fixed reference density – Density adjustment (in the **Expert** menu)	Unit choose list	Country-dependent: ▪ kg/Nl ▪ lb/Scf

Parameter	Description	Selection/ User entry	Factory setting
Temperature unit	Select the unit for temperature. *Result* The selected unit applies for: – Output – Reference temperature – Simulation process variable	Unit choose list	Country-dependent: ▪ °C (Celsius) ▪ °F (Fahrenheit)
Pressure unit	Select the unit for pipe pressure.	Unit choose list	Country-dependent: ▪ bar a ▪ psi a

10.3.2 Selecting and setting the medium

The **Medium selection** submenu contains parameters that have to be configured for selecting and setting the medium.

Navigation path
"Setup" menu → Medium selection

Structure of the submenu

Medium selection	→	Select medium
		Select gas type
		Reference sound velocity
		Temperature coefficient sound velocity
		Pressure compensation
		Pressure value
		External pressure

Parameter overview with brief description

Parameter	Prerequisite	Description	Selection/ User entry	Factory setting
Medium selection	–	Select the medium type.	▪ Liquid ▪ Gas	Liquid
Select gas type	The following option is selected in the **Medium selection** parameter: Gas	Select the gas type for the measurement application.	Gas type choose list	Air
Reference sound velocity	The following option is selected in the **Select gas type** parameter: Others	Enter the sound velocity of the gas at 0°C (32°F).	0 to 99 999 m/s	0 m/s
Temperature coefficient sound velocity	The following option is selected in the **Select gas type** parameter: Others	Enter the temperature coefficient of the sound velocity of the gas.	Max. 15-digit, positive floating-point number	0 (m/s)/K
Pressure compensation	The following option is selected in the **Medium selection** parameter: Gas	Enable the automatic pressure correction.	▪ Off ▪ Fixed value	Off
Pressure value	The following option is selected in the **Pressure compensation** parameter: Fixed value	Enter a value for the process pressure to be used for pressure correction.	0 to 99 999 [bar, psi]	Country-dependent: ▪ 1.01325 bar ▪ 14.7 psi
External pressure	The following option is selected in the **Pressure compensation** parameter: External value	External value	0 to 99 999 [bar, psi]	Country-dependent: ▪ 1.01325 bar ▪ 14.7 psi

10.3.3 Configuring communication interface

The **Communication** submenu guides you systematically through all parameters that must be configured for selecting and setting the communication interface.

Navigation path
"Setup" menu → Communication

Structure of the submenu

Communication	→	Bus address
		Baud rate
		Data transfer mode
		Parity
		Byte order
		Assign diagnostic behavior
		Failure mode

Parameter overview with brief description

Parameter	Description	Selection/ User entry	Factory setting
Bus address	Enter device address.	1 to 247	247
Baud rate	Define data transfer speed.	Baud rate list box(→ 🗎 79)	19 200 BAUD
Data transfer mode	Select data transfer mode.	▪ ASCII Transmission of data in the form of readable ASCII characters. Error protection via LRC. ▪ RTU Transmission of data in binary form. Error protection via CRC16.	RTU
Parity	Select parity bits.	**ASCII picklist** ▪ 0 = even ▪ 1 = odd **RTU picklist** ▪ 0 = even ▪ 1 = odd ▪ 2 = no parity bit/1 stop bit ▪ 3 = no parity bit/2 stop bits	Even
Byte order	Select byte transmission sequence.	▪ 0-1-2-3 ▪ 3-2-1-0 ▪ 1-0-3-2 ▪ 2-3-0-1	1-0-3-2

Parameter	Description	Selection/ User entry	Factory setting
Assign diagnostic behavior	Select diagnostic behavior for MODBUS communication.	▪ Off ▪ Alarm or warning ▪ Warning ▪ Alarm	Alarm
Failure mode	Select measured value output behavior when a diagnostic message occurs via Modbus communication. This parameter operates in accordance with the option selected in the **Assign diagnostic behavior** parameter.	▪ NaN value ▪ Last valid value NaN ≡ not a number	NaN value

10.3.4 Configuring the low flow cut off

The **Low flow cut off** submenu contains parameters that have to be set for configuring the low flow cut off.

Navigation path
"Setup" menu → Low flow cut off

Structure of the submenu

Low flow cut off	→	Assign process variable
		On value low flow cut off
		Off value low flow cutoff
		Pressure shock suppression

Parameter overview with brief description

Parameter	Prerequisite	Description	Selection/ User entry	Factory setting
Assign process variable	–	Select the process variable for low flow cut off.	▪ Off ▪ Mass flow ▪ Volume flow ▪ Corrected volume flow	Mass flow
On value low flow cut off	One of the following options is selected in the **Assign process variable** parameter: ▪ Mass flow ▪ Volume flow ▪ Corrected volume flow	Enter the on value for low flow cut off.	Max. 15-digit, positive floating-point number	For liquids: depends on country and nominal diameter
Off value low flow cut off	One of the following options is selected in the **Assign process variable** parameter: ▪ Mass flow ▪ Volume flow ▪ Corrected volume flow	Enter the off value for low flow cut off.	0 to 100 %	50 %
Pressure shock suppression	One of the following options is selected in the **Assign process variable** parameter: ▪ Mass flow ▪ Volume flow ▪ Corrected volume flow	Enter the time interval for signal suppression (= active pressure shock suppression).	0 to 100 s	0 s

10.3.5 Configuring the partial filled pipe detection

The **Partially filled pipe detection** submenu contains parameters that have to be set for configuring empty pipe detection.

Navigation path
"Setup" menu → Partial filled pipe detection

Structure of the submenu

Partially filled pipe detection	→	Assign process variable
		Low value partial filled pipe detection
		High value partial filled pipe detection
		Response time part. filled pipe detect.

Parameter overview with brief description

Parameter	Prerequisite	Description	Selection/ User entry	Factory setting
Assign process variable	–	Select a process variable to detect empty or partially filled pipes.	▪ Off ▪ Density ▪ Reference density	Density
Low value partial filled pipe detection	One of the following options is selected in the **Assign process variable** parameter: ▪ Density ▪ Reference density	Enter a lower limit value to activate detection of an empty or partially filled pipe.	Max. 15-digit, positive floating-point number	Country-dependent: ▪ 0.2 kg/l ▪ 12.5 lb/cf
High value partial filled pipe detection	One of the following options is selected in the **Assign process variable** parameter: ▪ Density ▪ Reference density	Enter an upper limit value to activate detection of an empty or partially filled pipe.	Max. 15-digit, positive floating-point number	Country-dependent: ▪ 6 kg/l ▪ 374.6 lb/cf
Response time part. filled pipe detect.	One of the following options is selected in the **Assign process variable** parameter: ▪ Density ▪ Reference density	Enter the time interval until the diagnostic message ⚠**S862 Partly filled pipe detection** is displayed for an empty or partially filled pipe.	0 to 100 s	1 s

10.4 Advanced settings

The **Advanced setup** menu with its submenus contains all parameters needed for specific settings.

Navigation path
"Setup" menu → Advanced setup

Overview of the parameters and submenus in the "Advanced setup" menu taking the example of the Web browser

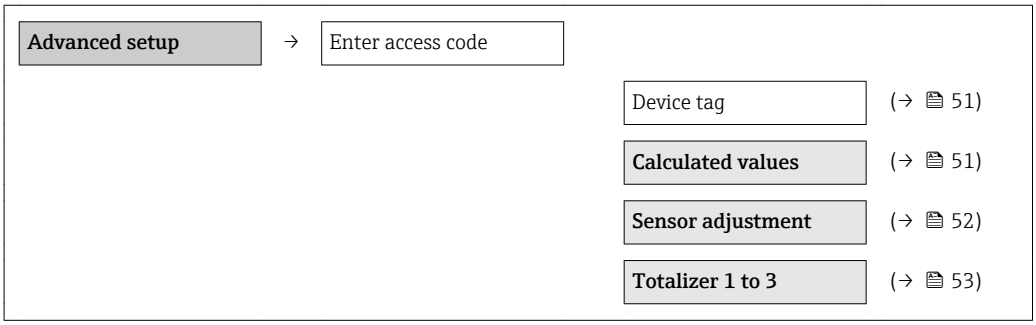

10.4.1 Defining the tag name

To enable quick identification of the measuring point within the system, you can enter a unique designation using the **Device tag** parameter and thus change the factory setting.

Navigation path
Setup → Advanced setup → Device tag

Parameter overview with brief description

Parameter	Description	Selection/ User entry	Factory setting
Device tag	Enter the name for the measuring point.	Max. 32 characters, such as letters, numbers or special characters (e.g. @, %, /)	Promass

The number of characters displayed depends on the characters used.

For information on the tag name in the "FieldCare" operating tool (→ 38)

10.4.2 Calculated values

The **Calculated values** submenu contains parameters for calculating the corrected volume flow.

Navigation path
"Setup" menu → Advanced setup → Calculated values

Structure of the submenu

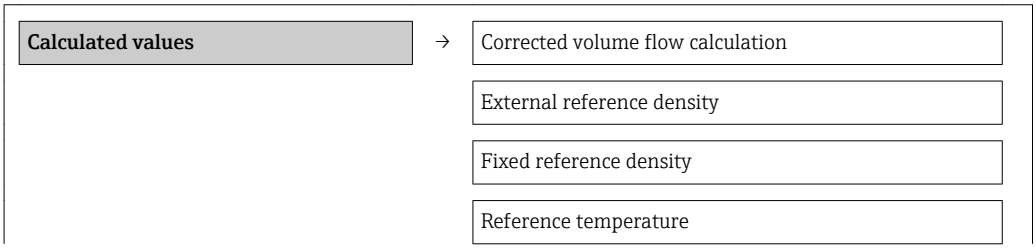

Linear expansion coefficient
Square expansion coefficient

Parameter overview with brief description

Parameter	Prerequisites	Description	Selection/input	Factory settings
Corrected volume flow calculation	–	Select the reference density for calculating the corrected volume flow.	▪ Fixed reference density ▪ Calculated reference density ▪ Reference density according to API 53 ▪ External reference density	Calculated reference density
External reference density	–	Shows external reference density.	Floating-point number with sign	Country-dependent: 0 kg/Nl (0 lb/scf)
Fixed reference density	The following option is selected in the **Corrected volume flow calculation** parameter: Fixed reference density	Enter the fixed value for the reference density.	Positive floating-point number with leading sign	Country-dependent: 0.001 kg/Nl (0.062 lb/scf)
Reference temperature	The following option is selected in the **Corrected volume flow calculation** parameter: Calculated reference density	Enter the reference temperature for calculating the reference density.	Floating-point number with sign	Country-dependent: 20 °C (68 ° F)
Linear expansion coefficient	The following option is selected in the **Corrected volume flow calculation** parameter: Calculated reference density	Enter the linear, medium-specific expansion coefficient for calculating the reference density.	0 to 1	0.0
Square expansion coefficient	–	For media with a non-linear expansion pattern, use this function to enter a quadratic, medium-specific expansion coefficient for calculating the reference density.	0 to 1	0.0

10.4.3 Carrying out a sensor adjustment

The **Sensor adjustment** submenu contains parameters that pertain to the functionality of the sensor.

Navigation path

"Setup" menu → Advanced setup → Sensor adjustment

Structure of the submenu

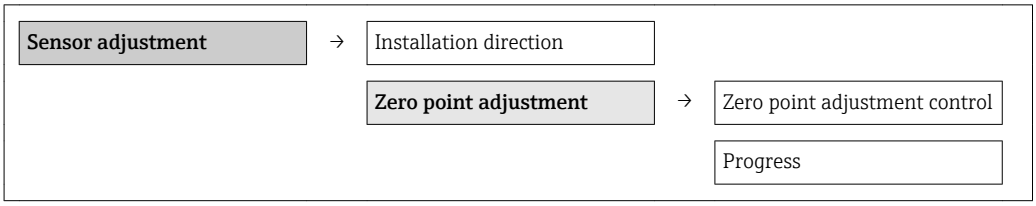

Parameter overview with brief description

Parameter	Description	Selection/ User entry	Factory setting
Installation direction	Change the sign of the direction of flow of the fluid.	▪ Flow in arrow direction ▪ Flow against arrow direction	Flow in arrow direction
Zero point adjustment control	Start the zero point adjustment.	▪ Cancel ▪ Start	Cancel
Progress		0…100 %	0

10.4.4 Configuring the totalizer

You can configure each totalizer in the three submenus **Totalizer 1-3**.

Navigation path

"Setup" menu → Advanced setup → Totalizer 1-3

Structure of the submenu

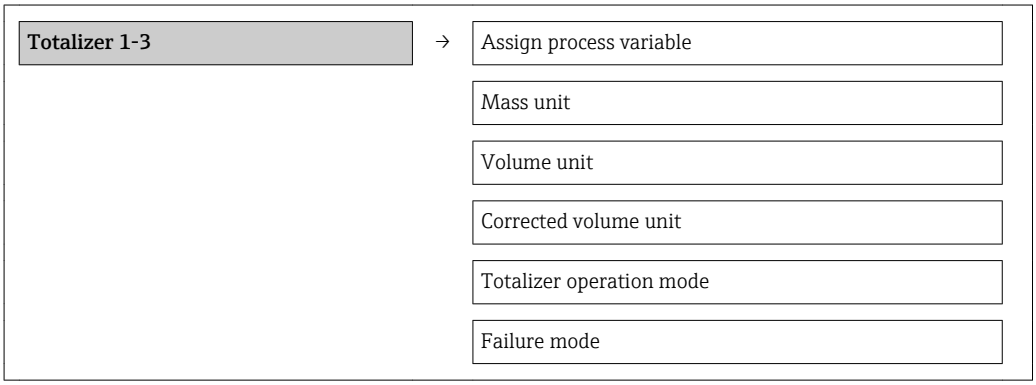

Parameter overview with brief description

Parameter	Prerequisite	Description	Selection/ User entry	Factory setting
Assign process variable	-	Select process variable for totalizer. *Result* The selection determines the choose list of the **Unit** parameter.	▪ Off ▪ Mass flow ▪ Volume flow ▪ Corrected volume flow The range of options increases if the measuring device has one or more application packages.	Mass flow
Mass unit	The following option is selected in the **Assign process variable** parameter: Mass flow	Select the unit for mass. *Result* The selected unit is taken from: Mass flow unit	Unit choose list	Country-dependent: ▪ kg ▪ lb
Volume unit	The following option is selected in the **Assign process variable** parameter: Volume flow	Select the unit for volume. *Result* The selected unit is taken from: Volume flow unit	Unit choose list	Country-dependent ▪ l ▪ gal (us)
Corrected volume unit	The following option is selected in the **Assign process variable** parameter: Corrected volume flow	Select the unit for standard volume. *Result* The selected unit is taken from: Corrected volume flow unit	Unit choose list	Country-dependent: ▪ Nl ▪ Scf
Totalizer operation mode	One of the following options is selected in the **Assign process variable** parameter: ▪ Mass flow ▪ Volume flow ▪ Corrected volume flow	Select totalizer calculation mode.	▪ Net flow total ▪ Forward flow total ▪ Reverse flow total	Net flow total
Failure mode	One of the following options is selected in the **Assign process variable** parameter: ▪ Mass flow ▪ Volume flow ▪ Corrected volume flow	Specify the behavior of the totalizer in the event of a device alarm.	▪ Stop ▪ Actual value ▪ Last valid value	Stop

10.5 Simulation

The **Simulation** submenu enables you to simulate, without a real flow situation, various process variables in the process and the device alarm mode and to verify downstream signal chains (switching valves or closed-control loops).

Navigation path
"Diagnostics" menu → Simulation

Simulation	→	Assign simulation process variable
		Value process variable
		Simulation device alarm

10.5.1 Parameter overview with brief description

Parameter	Prerequisite	Description	Selection/ User entry	Factory setting
Assign simulation process variable	-	Select a process variable for the simulation process that is activated.	▪ Off ▪ Mass flow ▪ Volume flow ▪ Corrected volume flow ▪ Density ▪ Reference density ▪ Temperature The range of options increases if the measuring device has one or more application packages.	Off
Value process variable	A process variable is selected in the **Assign simulation process variable** parameter.	Enter the simulation value for the selected process variable.	Depends on the process variable selected	-
Simulation device alarm	-	Switch the device alarm on and off.	▪ Off ▪ On	Off

10.6 Protecting settings from unauthorized access

The following option exists for protecting the configuration of the measuring device from unintentional modification after commissioning: Write protection via write protection switch

10.6.1 Write protection via write protection switch

The write protection switch makes it possible to block write access to the entire operating menu with the exception of the following parameters:
- External pressure
- External temperature
- Reference density
- All parameters for configuring the totalizer

The parameter values are now read only and cannot be edited any more:
- Via service interface (CDI)
- Via Modbus RS485

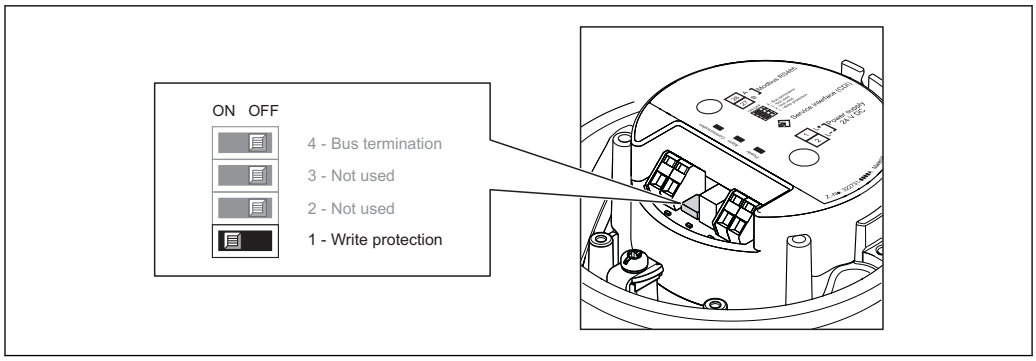

A0017954

1. Depending on the housing version, loosen the securing clamp or fixing screw of the housing cover.
2. Depending on the housing version, unscrew or open the housing cover.
3. Setting the write protection switch on the main electronics module to the ON position enables the hardware write protection. Setting the write protection switch on the main electronics module to the OFF position (factory setting) disables the hardware write protection.
   ↳ If hardware write protection is enabled, the **Hardware locked** option is displayed in the **Locking status** parameter (→ 📄 57); if disabled, no option is displayed in the **Locking status** parameter (→ 📄 57)
4. Reverse the removal procedure to reassemble the transmitter.

11 Operation

11.1 Read device locking status

The write protection types that are currently active can be determined using the **Locking status** parameter.

Navigation path
"Display/operation" menu → Locking status

Function scope of "Locking status" parameter

Options	Description
Hardware locked	The write protection switch (DIP switch) for hardware locking is activated on the main electronics module. This prevents write access to the parameters (→ 55).
Temporarily locked	Write access to the parameters is temporarily locked on account of internal processes running in the device (e.g. data upload/download, reset etc). Once the internal processing has been completed, the parameters can be changed once again.

11.2 Reading measured values

You can read all measured values using the **Measured values** menu.

Navigation path
Diagnostics → Measured values

11.2.1 Process variables

The **Process variables** submenu contains all the parameters needed to display the current measured values for every process variable.

Navigation path
"Diagnostics" menu → Measured values → Process variables

Structure of the submenu

Process variable	→	Mass flow
		Volume flow
		Corrected volume flow
		Density
		Reference density
		Temperature
		Pressure value

Parameter overview with brief description

Parameter overview with brief description

Parameter	Prerequisite	Description	Display
Mass flow	–	Displays the mass flow currently measured	Floating-point number with sign
Volume flow	–	Displays the volume flow currently calculated	Floating-point number with sign
Corrected volume flow	–	Displays the corrected volume flow currently calculated	Floating-point number with sign
Density	–	Displays the density currently measured	Floating-point number with sign
Reference density	–	Displays the density currently measured at reference temperature	Floating-point number with sign
Temperature	–	Displays the medium temperature currently measured	Floating-point number with sign
Pressure value	–	Displays either a fixed or external pressure value	Floating-point number with sign

11.2.2 Totalizer

The **Totalizer** submenu contains all the parameters needed to display the current measured values for every totalizer.

Navigation path
"Diagnostics" menu → Measured values → Totalizer

Structure of the submenu

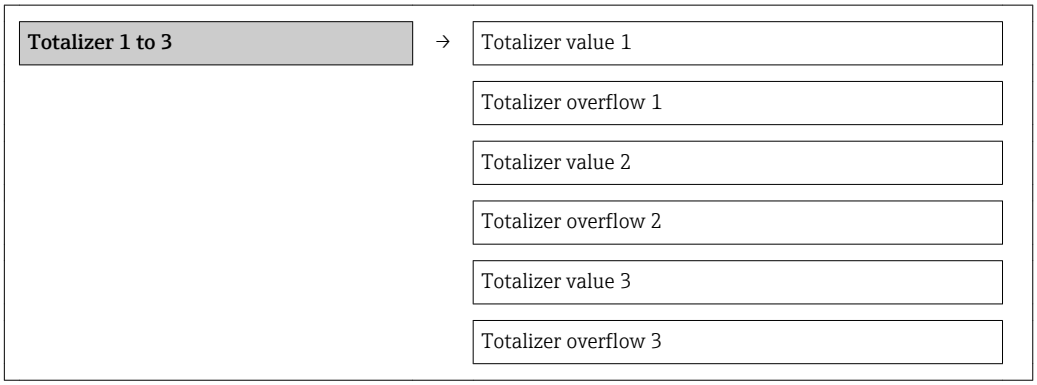

Parameter overview with brief description

Parameter	Prerequisite	Description	Display
Totalizer value 1-3	One of the following options is selected in the **Assign process variable** parameter of the **Totalizer 1-3** submenu: ▪ Mass flow ▪ Volume flow ▪ Corrected volume flow	Displays the current totalizer counter value.	Floating point number with sign
Totalizer overflow 1-3	One of the following options is selected in the **Assign process variable** parameter of the **Totalizer 1-3** submenu: ▪ Mass flow ▪ Volume flow ▪ Corrected volume flow	Displays the current totalizer overflow.	Integer

11.3 Adapting the measuring device to the process conditions

The following are available for this purpose:
- Basic settings using the **Setup** menu (→ 🗎 43)
- Advanced settings using the **Advanced setup** menu (→ 🗎 51)

11.4 Performing a totalizer reset

In the **Operation** submenu, 2 parameters with various options for resetting the three totalizers are available:
- Control totalizer 1-3
- Reset all totalizers

Navigation path
"Display/operat." menu → Operation

Function scope of the "Control totalizer" parameter

Options	Description
Totalize	The totalizer is started.
Reset + hold	The totaling process is stopped and the totalizer is reset to 0.
Preset + hold	The totaling process is stopped and the totalizer is set to the defined start value in the **Preset** parameter.
Reset + totalize	The totalizer is reset to 0 and the totaling process is restarted.
Preset + totalize	The totalizer is set to the defined start value in the **Preset** parameter and the totaling process is restarted.

Function scope of the "Reset all totalizers" parameter

Options	Description
Reset + totalize	Resets all totalizers to 0 and restarts the totaling process. This deletes all the flow values previously totalized.

"Operation" submenu

Operation	→	Control totalizer 1
		Preset value 1
		Control totalizer 2
		Preset value 2
		Control totalizer 3
		Preset value 3
		Reset all totalizers

Parameter overview with brief description

Parameter	Prerequisite	Description	Selection/ User entry	Factory setting
Control totalizer 1-3	A process variable is selected in the **Assign process variable** parameter of the **Totalizer 1-3** submenu.	Control totalizer value.	▪ Totalize ▪ Reset + hold ▪ Preset + hold ▪ Reset + totalize ▪ Preset + totalize	Totalize
Preset value 1-3	A process variable is selected in the **Assign process variable** parameter of the **Totalizer 1-3** submenu.	Specify start value for totalizer.	Floating-point number with sign	Country-dependent: ▪ 0 kg ▪ 0 lb
Reset all totalizers	-	Reset all totalizers to 0 and start.	▪ Cancel ▪ Reset + totalize	Cancel

12 Diagnostics and troubleshooting

12.1 General troubleshooting

For output signals

Problem	Possible causes	Remedy
Green power LED on the main electronics module of the transmitter is dark	Supply voltage does not match that specified on the nameplate.	Apply the correct supply voltage (→ 30).
Green power LED on the main electronics module of the transmitter is dark	Power supply cable connected incorrectly	Check the terminal assignment .
Green power LED on Safety Barrier Promass 100 is dark	Supply voltage does not match that specified on the nameplate.	Apply the correct supply voltage (→ 30).
Green power LED on Safety Barrier Promass 100 is dark	Power supply cable connected incorrectly	Check the terminal assignment (→ 28).
Device measures incorrectly.	Configuration error or device is operated outside the application.	1. Check and correct parameter configuration. 2. Observe limit values specified in the "Technical Data".

For access

Problem	Possible causes	Remedy
No write access to parameters	Hardware write protection enabled	Set the write protection switch on the main electronics module to the OFF position (→ 55).
No connection via Modbus RS485	Modbus RS485 bus cable connected incorrectly	Check the terminal assignment .
No connection via Modbus RS485	Device plug connected incorrectly	Check the pin assignment of the device plug (→ 28).
No connection via Modbus RS485	Modbus RS485 cable incorrectly terminated	Check terminating resistor (→ 32).
No connection via Modbus RS485	Incorrect settings for the communication interface	Check the Modbus RS485 configuration (→ 47).
No connection via service interface	Incorrect configuration of USB interface on PC or driver not installed correctly.	Observe the documentation for the Commubox. FXA291: Document "Technical Information" TI00405C

12.2 Diagnostic information via light emitting diodes

12.2.1 Transmitter

Various light emitting diodes (LEDs) on the main electronics module of the transmitter provide information on device status.

LED	Color	Meaning
Power	Off	Supply voltage is off or too low.
	Green	Supply voltage is ok.

Alarm	Off	Device status is ok.
	Flashing red	A device error of diagnostic behavior "Warning" has occurred.
	Red	▪ A device error of diagnostic behavior "Alarm" has occurred. ▪ Boot loader is active.
Communication	Flashing white	Modbus RS485 communication is active.

12.2.2 Safety Barrier Promass 100

Various light emitting diodes (LEDs) on the Safety Barrier Promass 100 provide status information.

LED	Color	Meaning
Power	Off	Supply voltage is off or too low.
	Green	Supply voltage is ok.
Communication	Flashing white	Modbus RS485 communication is active.

12.3 Diagnostic information in FieldCare

12.3.1 Diagnostic options

Any faults detected by the measuring device are displayed on the home page of the operating tool once the connection has been established.

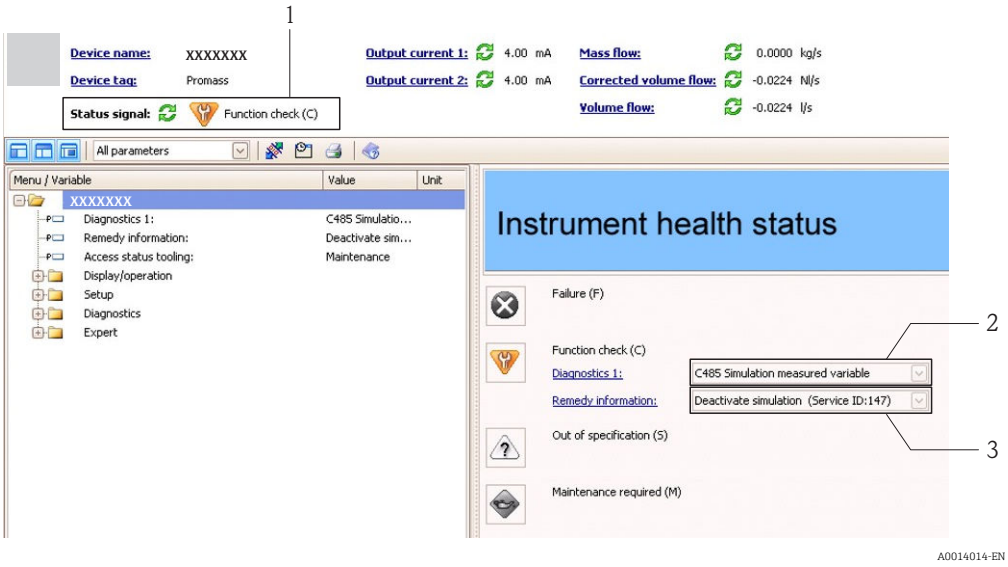

1 *Status area with status signal*
2 *Diagnostic information*
3 *Remedy information with Service ID*

Furthermore, diagnostic events that have occurred can be viewed in the **Diagnostics** menu:
- Via parameters
- Via submenu (→ 📄 67)

Status signals

The status signals provide information on the state and reliability of the device by categorizing the cause of the diagnostic information (diagnostic event).

Symbol	Meaning
A0017271	**Failure** A device error has occurred. The measured value is no longer valid.
A0017278	**Function check** The device is in service mode (e.g. during a simulation).
A0017277	**Out of specification** The device is operated: Outside its technical specification limits (e.g. outside the process temperature range)
A0017276	**Maintenance required** Maintenance is required. The measured value is still valid.

The status signals are categorized in accordance with VDI/VDE 2650 and NAMUR Recommendation NE 107.

Diagnostic information

The fault can be identified using the diagnostic information. The short text helps you by providing information about the fault.

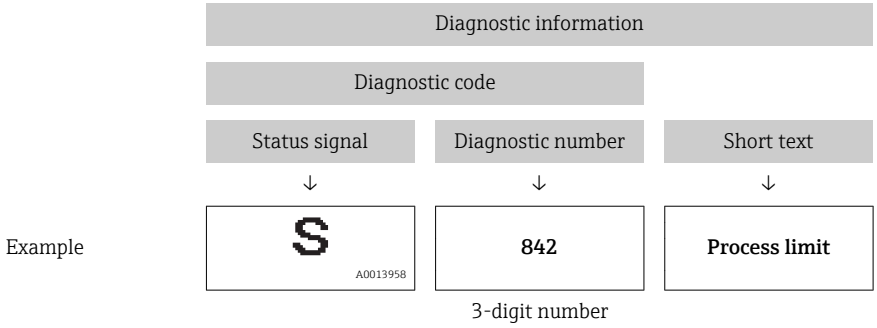

12.3.2 Calling up remedy information

Remedy information is provided for every diagnostic event to ensure that problems can be rectified quickly:

- On the home page
  Remedy information is displayed in a separate field below the diagnostics information.
- In the **Diagnostics** menu
  Remedy information can be called up in the working area of the user interface.

The user is in the **Diagnostics** menu.

1. Call up the desired parameter.
2. On the right in the working area, mouse over the parameter.
   ↳ A tool tip with remedy information for the diagnostic event appears.

12.4 Diagnostic information via communication interface

12.4.1 Reading out diagnostic information

Diagnostic information can be read out via Modbus RS485 register addresses.

- Via register address **6821** (data type = string): diagnosis code, e.g. F270
- Via register address **6859** (data type = integer): diagnosis number, e.g. 270

For an overview of diagnostic events with diagnosis number and diagnosis code (→ 65)

12.4.2 Configuring error response mode

Error response mode for Modbus RS485 communication can be configured in the **Communication** submenu using 2 parameters.

Navigation path
"Setup" menu → Communication

Parameter overview with brief description

Parameter	Description	Options	Factory setting
Assign diagnostic behavior	Select diagnostic behavior for MODBUS communication.	▪ Off ▪ Alarm or warning ▪ Warning ▪ Alarm	Alarm
Failure mode	Select measured value output behavior when a diagnostic message occurs via Modbus communication. This parameter operates in accordance with the option selected in the **Assign diagnostic behavior** parameter.	▪ NaN value ▪ Last valid value NaN ≡ not a number	NaN value

12.5 Adapting the diagnostic information

12.5.1 Adapting the diagnostic behavior

Each diagnostic number is assigned a certain diagnostic behavior at the factory. The user can change this assignment for certain diagnostic numbers via the **Diagnostic no. xxx** parameter.

Navigation path
"Expert" menu → System → Diagnostic handling → Diagnostic behavior → Assign behavior of diagnostic no. xxx

You can assign the following options to the diagnostic number as the diagnostic behavior:

Options	Description
Alarm	Measurement is interrupted. Measured value output via Modbus RS485 and totalizers assume the defined alarm condition. A diagnostic message is generated.
Warning	Measurement is resumed. Measured value output via Modbus RS485 and totalizers are not affected. A diagnostic message is generated.
Logbook entry only	The device continues to measure. The diagnostic message is entered in the Event logbook (events list) submenu only and is not displayed in alternation with the measured value display.
Off	The diagnostic event is ignored, and no diagnostic message is generated or entered.

12.6 Overview of diagnostic information

The amount of diagnostic information increases if the measuring device has one or more application packages.

Diagnostics for the sensor

Diagnostic number	Short text	Remedial measures	Status signal from the factory	Diagnostic behavior from the factory
022	Sensor temperature	1. Change main electronic module. 2. Change sensor.	F	Alarm
044	Sensor drift	1. Check or change main electronics. 2. Change sensor.	S	Alarm*
046	Sensor limit	1. Inspect sensor. 2. Check process conditions.	S	Alarm*
062	Sensor connection	1. Change main electronic module. 2. Change sensor.	F	Alarm
082	Data storage	1. Change main electronic module. 2. Change sensor.	F	Alarm
083	Memory content	1. Restart device. 2. Restore S-DAT data. 3. Change sensor.	F	Alarm
* Diagnostic behavior can be changed: "Adapting the diagnostic behavior" section (→ 64)				

Diagnostics for the electronics

Diagnostic number	Short text	Remedial measures	Status signal from the factory	Diagnostic behavior from the factory
242	Software incompatible	1. Check software. 2. Flash or change main electronic module.	F	Alarm
261	Electronic modules	1. Restart device. 2. Check electronic modules. 3. Change I/O module or main electronics.	F	Alarm
270	Main electronic failure	Change main electronic module.	F	Alarm
271	Main electronic failure	1. Restart device. 2. Change main electronic module.	F	Alarm
272	Main electronic failure	1. Restart device. 2. Contact service.	F	Alarm
273	Main electronic failure	Replace electronics.	F	Alarm
274	Main electronic failure	Replace electronics.	S	Warning *
311	Electronic failure	1. Transfer data or reset device. 2. Contact service.	F	Alarm
* Diagnostic behavior can be changed: "Adapting the diagnostic behavior" section (→ 64)				

Diagnostics for the configuration

Diagnostic number	Short text	Remedial measures	Status signal from the factory	Diagnostic behavior from the factory
410	Data transfer	1. Check connection. 2. Retry data transfer.	F	Alarm
411	Up-/download active	Up-/download active, please wait	C	Warning
438	Dataset	1. Check data set file. 2. Check device configuration. 3. Up- and download new configuration.	M	Warning
453	Flow override	Deactivate flow override.	C	Warning
484	Simulation failsafe mode	Deactivate simulation.	C	Alarm
485	Simulation process variable	Deactivate simulation.	C	Warning
* Diagnostic behavior can be changed: "Adapting the diagnostic behavior" section (→ 📄 64)				

Diagnostics for the process

Diagnostic number	Short text	Remedial measures	Status signal from the factory	Diagnostic behavior from the factory
830	Ambient temperature	Reduce the ambient temperature around the sensor housing.	S	Warning
831	Ambient temperature	Increase the ambient temperature around the sensor housing.	S	Warning
832	Ambient temperature	Reduce ambient temperature.	S	Warning*
833	Ambient temperature	Increase ambient temperature.	S	Warning*
834	Process temperature	Reduce process temperature.	S	Warning*
835	Process temperature	Increase process temperature.	S	Warning*
843	Process limit	Check process conditions.	S	Warning
862	Partly filled pipe	1. Check for gas in process. 2. Check detection limits.	S	Warning
910	Measuring tube does not vibrate	1. Check electronics. 2. Inspect sensor.	F	Alarm
912	Inhomogeneous	Fluid is inhomogeneous, e.g. gas or solid content! 1. Check process conditions. 2. Increase system pressure. ℹ In particular with outgassing media and/or increased gas content, the following measures are recommended to increase system pressure: ▪ Install the instrument at the outlet side of a pump. ▪ Install the instrument at the lowest point of an ascending pipeline. ▪ Install a flow restriction, e.g. reducer or orifice plate, downstream from the instrument.	S	Warning*

Diagnostic number	Short text	Remedial measures	Status signal from the factory	Diagnostic behavior from the factory
913	Inhomogeneous	Oscillation amplitude limit! The fluid properties do not allow a precise measurement. Cause: Process fluid is very inhomogeneous (gas or solid content) 1. Check process conditions. 2. Increase voltage. 3. Check main electronic module or sensor.	S	Alarm*
* Diagnostic behavior can be changed: "Adapting the diagnostic behavior" section (→ 64)				

12.7 Pending diagnostic events

The **Diagnostics** menu allows the user to view the current diagnostic event and the previous diagnostic event separately.

Navigation path
- "Diagnostics" menu → Actual diagnostics
- "Diagnostics" menu → Previous diagnostics

Parameter overview with brief description

Parameter	Prerequisite	Description	Display
Actual diagnostics	1 diagnostic event has occurred	Displays the current diagnostic event along with the diagnostic information. If two or more messages occur simultaneously, the message with the highest priority is shown on the display.	Diagnostic code, short message
Previous diagnostics	2 diagnostic events have already occurred	Displays the diagnostic event that occurred prior to the current diagnostic event along with the diagnostic information.	Diagnostic code, short message

To call up the measures to rectify a diagnostic event:
Via "FieldCare" operating tool (→ 63)

Other diagnostic events that are pending can be viewed in the **Diagnostic list** submenu (→ 67)

12.8 Diagnostic list

In the **Diagnostic list** submenu, up to 5 currently pending diagnostic events can be displayed along with the related diagnostic information. If more than 5 diagnostic events are pending, the events with the highest priority are shown on the display.

Navigation path
"Diagnostics" menu → Diagnostic list

To call up the measures to rectify a diagnostic event:
Via "FieldCare" operating tool (→ 63)

12.9 Event logbook

12.9.1 Event history

A chronological overview of the event messages that have occurred is provided in the events list which contains a maximum of 20 message entries. This list can be displayed via FieldCare if necessary.

Navigation path
Event list: **F** → Tool box→ Additional functions

For information on the event list, see the FieldCare user interface (→ 38)

This event history includes entries for:
- Diagnostic events (→ 65)
- Information events (→ 68)

In addition to the operation time of its occurrence and possible troubleshooting measures, each event is also assigned a symbol that indicates whether the event has occurred or is ended:
- Diagnostics event
  - : Event has occurred
  - : Event has ended
- Information event
  : Event has occurred

To call up the measures to rectify a diagnostic event:
Via "FieldCare" operating tool (→ 63)

For filtering the displayed event messages (→ 68)

12.9.2 Filtering the event logbook

Using the **Filter options** parameter, you can define which category of event messages is displayed in the **Events list** submenu.

Navigation path
"Diagnostics" menu → Event logbook → Filter options

Filter categories
- All
- Failure (F)
- Function check (C)
- Out of specification (S)
- Maintenance required (M)
- Information (I)

12.9.3 Overview of information events

Unlike a diagnostic event, an information event is displayed in the event logbook only and not in the diagnostic list.

Information event	Event text
I1000	-------- (device ok)
I1089	Power on
I1090	Configuration reset
I1091	Configuration changed
I1110	Write protection switch changed
I1111	Density adjust. error

Information event	Event text
I1151	History reset
I1209	Density adjustment OK
I1221	Zero point adjust failure
I1222	Zero point adjustment OK

12.10 Resetting the measuring device

Using the **Device reset** parameter it is possible to reset the entire device configuration or some of the configuration to a defined state.

Navigation path
"Diagnostics" menu → Device reset → Device reset

Function scope of the "Device reset" parameter

Options	Description
Cancel	The user exists the parameter and no action is performed.
To factory defaults	Every parameter is reset to its factory setting.
To delivery settings	Every parameter for which a customized default setting was ordered is reset to that customized value; all other parameters are reset to their factory setting. This option is not visible if no customized settings were ordered.
Restart device	Restarting the device resets every parameter whose data are saved in the volatile memory (RAM) to the parameter's factory setting (e.g. measured value data). The device configuration remains unchanged.

12.11 Device information

The **Device information** submenu contains all the parameters that display different information for identifying the device.

Navigation path
"Diagnostics" menu → Device information

Structure of the submenu

Device information	→	**Device tag**	(→ 📄 51)
		Serial number	
		Firmware version	
		Device name	
		Order code	
		Extended order code 1	
		Extended order code 2	
		Extended order code 3	
		ENP version	

Parameter overview with brief description

Parameter	Prerequisite	Description	Display
Serial number	-	Displays the serial number of the measuring device. The number can be found on the nameplate of the sensor and transmitter.	Max. 11-digit character string comprising letters and numbers
Firmware version	-	Displays the device firmware version installed.	Character string in the format xx.yy.zz
Device name	-	Displays the name of the transmitter. The name can be found on the nameplate of the transmitter.	Promass 100
Order code	-	Displays the device order code. The order code can be found on the nameplate of the sensor and transmitter in the "Order code" field.	Character string composed of letters, numbers and certain punctuation marks
Extended order code 1-3	Depending on the length of the extended order code, the code is divided into a maximum of 3 parameters.	Displays the 1st, 2nd or 3rd part of the extended order code. The extended order code can also be found on the nameplate of the sensor and transmitter in the "Ext. ord. cd." field.	Character string
ENP version	-	Displays the version of the electronic nameplate.	Character string in the format xx.yy.zz

12.12 Firmware history

Release date	Firmware version	Order code for "Firmware version"	Firmware changes	Documentation type	Documentation
04.2013	01.02.00	Option **74**	Update	Operating Instructions	BA01059D/06/DE/02.13 BA01059D/06/EN/02.13
06.2012	01.01.00	Option **78**	Original firmware	Operating Instructions	BA01059D/06/DE/01.12 BA01059D/06/EN/01.12

Flashing the firmware to the current version or to the previous version is possible via the service interface (CDI) .

For the compatibility of the firmware version with the previous version, the installed device description files and operating tools, observe the information about the device in the "Manufacturer's information" document.

The manufacturer's information is available:
- In the Download Area of the Endress+Hauser Internet site: www.endress.com → Download
- Specify the following details:
  - Product root, e.g. 8E1B
  - Text search: Manufacturer's information
  - Search range: documentation

13 Maintenance

13.1 Maintenance tasks

No special maintenance work is required.

13.1.1 Exterior cleaning

When cleaning the exterior of measuring devices, always use cleaning agents that do not attack the surface of the housing or the seals.

13.1.2 Interior cleaning

Observe the following points for CIP and SIP cleaning:
- Use only cleaning agents to which the process-wetted materials are adequately resistant.
- Observe the maximum permitted medium temperature for the measuring device (→ 85).

Observe the following points for cleaning with pigs:
Observe the inside diameter of the measuring tube and process connection.

13.2 Measuring and test equipment

Endress+Hauser offers a wide variety of measuring and test equipment, such as W@M or device tests.

Your Endress+Hauser Sales Center can provide detailed information on the services.

For a list of some of the measuring and test equipment, refer to the "Accessories" chapter of the "Technical Information" document for the device.

13.3 Endress+Hauser services

Endress+Hauser offers a wide variety of services for maintenance such as recalibration, maintenance service or device tests.

Your Endress+Hauser Sales Center can provide detailed information on the services.

14 Repair

14.1 General notes

Repair and conversion concept
The Endress+Hauser repair and conversion concept provides for the following:
- The measuring devices have a modular design.
- Spare parts are grouped into logical kits with the associated Installation Instructions.
- Repairs are carried out by Endress+Hauser Service or by correspondingly trained customers.
- Certified devices can be converted into other certified devices by Endress+Hauser Service or at the factory only.

Notes for repair and conversion
For repair and modification of a measuring device, observe the following notes:
- Use only original Endress+Hauser spare parts.
- Carry out the repair according to the Installation Instructions.
- Observe the applicable standards, federal/national regulations, Ex documentation (XA) and certificates.
- Document every repair and each conversion and enter them into the *W@M* life cycle management database.

14.2 Spare parts

W@M Device Viewer (www.endress.com/deviceviewer):
All the spare parts for the measuring device, along with the order code, are listed here and can be ordered. If available, users can also download the associated Installation Instructions.

Measuring device serial number:
- Is located on the nameplate of the device.
- Can be read out via the **Serial number** parameter in the **Device information** submenu (→ 69).

14.3 Endress+Hauser services

Contact your Endress+Hauser Sales Center for information on services and spare parts.

14.4 Return

The measuring device must be returned if repairs or a factory calibration are required, or if the wrong measuring device has been ordered or delivered. According to legal regulations, Endress+Hauser, as an ISO-certified company, is required to follow certain procedures when handling returned products that are in contact with medium.

To ensure swift, safe and professional device returns, please read the return procedures and conditions on the Endress+Hauser website at
www.services.endress.com/return-material

14.5 Disposal

14.5.1 Removing the measuring device

1. Switch off the device.

2. **WARNING!** Danger to persons from process conditions. Beware of hazardous process conditions such as pressure in the measuring device, high temperatures or aggressive fluids.
   Carry out the mounting and connection steps from the chapters "Mounting the measuring device" and "Connecting the measuring device" in the logically reverse sequence. Observe the safety instructions.

14.5.2 Disposing of the measuring device

⚠ WARNING

Danger to personnel and environment from fluids that are hazardous to health.

- ▶ Ensure that the measuring device and all cavities are free of fluid residues that are hazardous to health or the environment, e.g. substances that have permeated into crevices or diffused through plastic.

Observe the following notes during disposal:
- Observe valid federal/national regulations.
- Ensure proper separation and reuse of the device components.

15 Accessories

Various accessories, which can be ordered with the device or subsequently from Endress +Hauser, are available for the device. Detailed information on the order code in question is available from your local Endress+Hauser sales center or on the product page of the Endress+Hauser website: www.endress.com.

15.1 Device-specific accessories

15.1.1 For the sensor

Accessories	Description
Heating jacket	Is used to stabilize the temperature of the fluids in the sensor. Water, water vapor and other non-corrosive liquids are permitted for use as fluids. If using oil as a heating medium, please consult with Endress+Hauser. Heating jackets cannot be used with sensors fitted with a rupture disk. For details, see Operating Instructions BA00099D

15.2 Communication-specific accessories

Accessories	Description
Commubox FXA195 HART	For intrinsically safe HART communication with FieldCare via the USB interface. For details, see "Technical Information" TI00404F
Commubox FXA291	Connects Endress+Hauser field devices with a CDI interface (= Endress+Hauser Common Data Interface) and the USB port of a computer or laptop. For details, see "Technical Information" TI00405C
HART Loop Converter HMX50	Is used to evaluate and convert dynamic HART process variables to analog current signals or limit values. For details, see "Technical Information" TI00429F and Operating Instructions BA00371F
Wireless HART adapter SWA70	Is used for the wireless connection of field devices. The WirelessHART adapter can be easily integrated into field devices and existing infrastructures, offers data protection and transmission safety and can be operated in parallel with other wireless networks with minimum cabling complexity. For details, see Operating Instructions BA00061S
Fieldgate FXA320	Gateway for the remote monitoring of connected 4-20 mA measuring devices via a Web browser. For details, see "Technical Information" TI00025S and Operating Instructions BA00053S
Fieldgate FXA520	Gateway for the remote diagnostics and remote configuration of connected HART measuring devices via a Web browser. For details, see "Technical Information" TI00025S and Operating Instructions BA00051S
Field Xpert SFX100	Compact, flexible and robust industry handheld terminal for remote configuration and for obtaining measured values via the HART current output (4-20 mA). For details, see Operating Instructions BA00060S

15.3 Service-specific accessories

Accessories	Description
Applicator	Software for selecting and sizing Endress+Hauser measuring devices: ▪ Calculation of all the necessary data for identifying the optimum flowmeter: e.g. nominal diameter, pressure loss, accuracy or process connections. ▪ Graphic illustration of the calculation results Administration, documentation and access to all project-related data and parameters over the entire life cycle of a project. Applicator is available: ▪ Via the Internet: https://wapps.endress.com/applicator ▪ On CD-ROM for local PC installation.
W@M	Life cycle management for your plant W@M supports you with a wide range of software applications over the entire process: from planning and procurement, to the installation, commissioning and operation of the measuring devices. All the relevant device information, such as the device status, spare parts and device-specific documentation, is available for every device over the entire life cycle. The application already contains the data of your Endress+Hauser device. Endress+Hauser also takes care of maintaining and updating the data records. W@M is available: ▪ Via the Internet: www.endress.com/lifecyclemanagement ▪ On CD-ROM for local PC installation.
FieldCare	FDT-based plant asset management tool from Endress+Hauser. It can configure all smart field units in your system and helps you manage them. By using the status information, it is also a simple but effective way of checking their status and condition. For details, see Operating Instructions BA00027S and BA00059S

15.4 System components

Accessories	Description
Memograph M graphic display recorder	The Memograph M graphic data manager provides information on all the relevant measured variables. Measured values are recorded correctly, limit values are monitored and measuring points analyzed. The data are stored in the 256 MB internal memory and also on a SD card or USB stick. For details, see "Technical Information" TI00133R and Operating Instructions BA00247R
Cerabar M	The pressure transmitter for measuring the absolute and gauge pressure of gases, steam and liquids. It can be used to read in the operating pressure value via Modbus RS485 or EtherNet/IP. For details, see "Technical Information" TI00426P, TI00436P and Operating Instructions BA00200P, BA00382P
Cerabar S	The pressure transmitter for measuring the absolute and gauge pressure of gases, steam and liquids. It can be used to read in the operating pressure value via Modbus RS485 or EtherNet/IP. For details, see "Technical Information" TI00383P and Operating Instructions BA00271P
iTEMP	The temperature transmitters can be used in all applications and are suitable for the measurement of gases, steam and liquids. They can be used to read in the medium temperature via analog or digital communication. For details, see "Fields of Activity", FA00006T

16 Technical data

16.1 Application

The measuring device is suitable for flow measurement of liquids and gases only.

Depending on the version ordered, the measuring device can also measure potentially explosive, flammable, poisonous and oxidizing media.

To ensure that the device remains in proper operating condition for its service life, use the measuring device only for media against which the process-wetted materials are adequately resistant.

16.2 Function and system design

Measuring principle

Mass flow measurement based on the Coriolis measuring principle

Measuring system

The device consists of a transmitter and a sensor. If a device with Modbus RS485 intrinsically safe is ordered, the Safety Barrier Promass 100 is part of the scope of supply and must be implemented to operate the device.

One device version is available: compact version, transmitter and sensor form a mechanical unit.
For information on the structure of the device (→ 📄 10)

16.3 Input

Measured variable

Direct measured variables

- Mass flow
- Density
- Temperature

Calculated measured variables

- Volume flow
- Corrected volume flow
- Reference density

Measuring range

Measuring ranges for liquids

DN		Measuring range full scale values $\dot{m}_{min(F)}$ to $\dot{m}_{max(F)}$	
[mm]	[in]	[kg/h]	[lb/min]
8	⅜	0 to 2 000	0 to 73.5
15	½	0 to 6 500	0 to 238
25	1	0 to 18 000	0 to 660
40	1½	0 to 45 000	0 to 1 650
50	2	0 to 70 000	0 to 2 570

Measuring ranges for gases

The full scale values depend on the density of the gas and can be calculated with the formula below:
$\dot{m}_{max(G)} = \dot{m}_{max(F)} \cdot \rho_G : x$

$\dot{m}_{max(G)}$	Maximum full scale value for gas [kg/h]
$\dot{m}_{max(F)}$	Maximum full scale value for liquid [kg/h]
$\dot{m}_{max(G)} < \dot{m}_{max(F)}$	$\dot{m}_{max(G)}$ can never be greater than $\dot{m}_{max(F)}$
ρ_G	Gas density in [kg/m³] at operating conditions

DN		x
[mm]	[in]	[kg/m³]
8	⅜	60
15	½	80
25	1	90
40	1½	90
50	2	90

Calculation example for gas

- Sensor: Promass P, DN 50
- Gas: Air with a density of 60.3 kg/m³ (at 20 °C and 50 bar)
- Measuring range (liquid):70 000 kg/h
- x = 90 kg/m³ (for Promass P, DN 50)

Maximum possible full scale value:
$\dot{m}_{max(G)} = \dot{m}_{max(F)} \cdot \rho_G : x = 70\,000\ kg/h \cdot 60.3\ kg/m^3 : 90\ kg/m^3 = 46\,900\ kg/h$

Recommended measuring range

"Flow limit" section (→ 🗎 85)

Operable flow range

Over 1000 : 1.

Flow rates above the preset full scale value are not overridden by the electronics unit, with the result that the totalizer values are registered correctly.

Input signal

Fieldbuses

To increase the accuracy of certain measured variables or to calculate the corrected volume flow for gases, the automation system can continuously write different measured values to the measuring device via Modbus RS485, EtherNet/IP or HART input:
- Process pressure or medium temperature to increase accuracy (e.g. external values from Cerabar M, Cerabar S or iTEMP)
- Reference density for calculating the corrected volume flow

16.4 Output

Output signal

Modbus RS485

Physical interface	In accordance with EIA/TIA-485-A standard
Terminating resistor	▪ For device version used in non-hazardous areas or Zone 2/Div. 2: integrated and can be activated via DIP switches on the transmitter electronics module ▪ For device version used in intrinsically safe areas: integrated and can be activated via DIP switches on the Safety Barrier Promass 100

Signal on alarm

Depending on the interface, failure information is displayed as follows:

Modbus RS485

Failure mode	Choose from: ▪ NaN value instead of current value ▪ Last valid value

Operating tool

Plain text display	With information on cause and remedial measures

Light emitting diodes (LED)

Status information	Status indicated by various light emitting diodes The following information is displayed depending on the device version: ▪ Supply voltage active ▪ Data transmission active ▪ Device alarm/error has occurred

Ex connection data

These values only apply for the following device version:
Order code for "Output", option **M**: Modbus RS485, for use in intrinsically safe areas

Transmitter

Intrinsically safe values

Order code for "Approvals"	Terminal numbers			
	Supply voltage		Signal transmission	
	20 (L-)	10 (L+)	62 (A)	72 (B)
▪ Option **BM**: ATEX II2G + IECEx Z1 Ex ia, II2D Ex tb ▪ Option **BO**: ATEX II1/2G + IECEx Z0/Z1 Ex ia, II2D ▪ Option **BQ**: ATEX II1/2G + IECEx Z0/Z1 Ex ia ▪ Option **BU**: ATEX II2G + IECEx Z1 Ex ia ▪ Option **C2**: CSA C/US IS Cl. I, II, III Div. 1 ▪ Option **85**: ATEX II2G + IECEx Z1 Ex ia + CSA C/US IS Cl. I, II, III Div. 1	U_i =16.24 V I_i =623 mA P_i =2.45 W L_i = 0 µH C_i =6 nF			

* The gas group depends on the sensor and nominal diameter.

For an overview and for information on the interdependencies between the gas group - sensor - nominal diameter, see the "Safety Instructions" (XA) document for the measuring device

Low flow cut off

The switch points for low flow cut off are user-selectable.

Galvanic isolation

The following connections are galvanically isolated from each other:
- Outputs
- Power supply

Protocol-specific data

Modbus RS485

Protocol	Modbus Applications Protocol Specification V1.1
Device type	Slave
Slave address range	1 to 247
Broadcast address range	0
Function codes	▪ 03: Read holding register ▪ 04: Read input register ▪ 06: Write single registers ▪ 08: Diagnostics ▪ 16: Write multiple registers ▪ 23: Read/write multiple registers
Broadcast messages	Supported by the following function codes: ▪ 06: Write single registers ▪ 16: Write multiple registers ▪ 23: Read/write multiple registers
Supported baud rate	▪ 1 200 BAUD ▪ 2 400 BAUD ▪ 4 800 BAUD ▪ 9 600 BAUD ▪ 19 200 BAUD ▪ 38 400 BAUD ▪ 57 600 BAUD ▪ 115 200 BAUD
Data transfer mode	▪ ASCII ▪ RTU
Data access	Each device parameter can be accessed via Modbus RS485. For Modbus register information (→ 92)

16.5 Power supply

Terminal assignment

(→ 26)

Pin assignment, device plug

(→ 28)

Supply voltage

Transmitter

- For device version with all communication types except Modbus RS485 intrinsically safe: DC20 to 30 V
- For device version with Modbus RS485100 intrinsically safe: power supply via Safety Barrier Promass 100

The power unit must be tested to ensure it meets safety requirements (e.g. PELV, SELV).

Safety Barrier Promass 100

DC20 to 30 V

Power consumption

Transmitter

Order code for "Output"	Maximum Power consumption
Option **M**: Modbus RS485, for use in non-hazardous areas and Zone 2/Div. 2	3.5 W
Option **M**: Modbus RS485, for use in intrinsically safe areas	2.45 W

Safety Barrier Promass 100

Order code for "Output"	Maximum Power consumption
Option **M**: Modbus RS485, for use in intrinsically safe areas	4.8 W

Current consumption

Transmitter

Order code for "Output"	Maximum Current consumption	Maximum switch-on current
Option **M**: Modbus RS485, for use in non-hazardous areas and Zone 2/Div. 2	90 mA	10 A (< 0.8 ms)
Option **M**: Modbus RS485, for use in intrinsically safe areas	145 mA	16 A (< 0.4 ms)

Safety Barrier Promass 100

Order code for "Output"	Maximum Current consumption	Maximum switch-on current
Option **M**: Modbus RS485, for use in intrinsically safe areas	230 mA	10 A (< 0.8 ms)

Power supply failure

- Totalizers stop at the last value measured.
- Depending on the device version, the configuration is retained in the device memory or in the plug-in memory (HistoROM DAT).
- Error messages (incl. total operated hours) are stored.

Electrical connection

(→ 📄 29)

Potential equalization

No special measures for potential equalization are required.

Terminals

Transmitter
Spring terminals for wire cross-sections0.5 to 2.5 mm^2 (20 to 14 AWG)

Safety Barrier Promass 100
Plug-in screw terminals for wire cross-sections0.5 to 2.5 mm^2 (20 to 14 AWG)

Cable entries

Transmitter
- Cable gland: M20 × 1.5 with cable ϕ 6 to 12 mm (0.24 to 0.47 in)
- Thread for cable entry:
  - NPT ½"
  - G ½"
  - M20

Cable specification

(→ 📄 24)

16.6 Performance characteristics

Reference operating conditions

- Error limits based on ISO 11631
- Water with +15 to +45 °C (+59 to +113 °F) at2 to 6 bar (29 to 87 psi)
- Specifications as per calibration protocol
- Accuracy based on accredited calibration rigs that are traced to ISO 17025.

To obtain measured errors, use the *Applicator* sizing tool (→ 91)

Maximum measured error

o.r. = of reading; 1 g/cm³ = 1 kg/l; T = medium temperature

Base accuracy

Mass flow and volume flow (liquids)
±0.10 %

Mass flow (gases)
±0.50 % o.r.

Design fundamentals (→ 84)

Density (liquids)
- Reference conditions:±0.0005 g/cm³
- Standard density calibration:±0.01 g/cm³
  (valid over the entire temperature range and density range)
- Wide-range density specification (order code for "Application package", option EF "Special density and concentration ") : ±0.002 g/cm³ (valid range for special density calibration: 0.0 to 2 g/cm³, +5 to +80 °C (+41 to +176 °F))

Temperature
±0.5 °C ± 0.005 · T °C (±0.9 °F ± 0.003 · (T − 32) °F)

Zero point stability

DN		Zero point stability	
[mm]	[in]	[kg/h]	[lb/min]
8	⅜	0.20	0.007
15	½	0.65	0.024
25	1	1.80	0.066
40	1½	4.50	0.165
50	2	7.0	0.257

Example for max. measured error

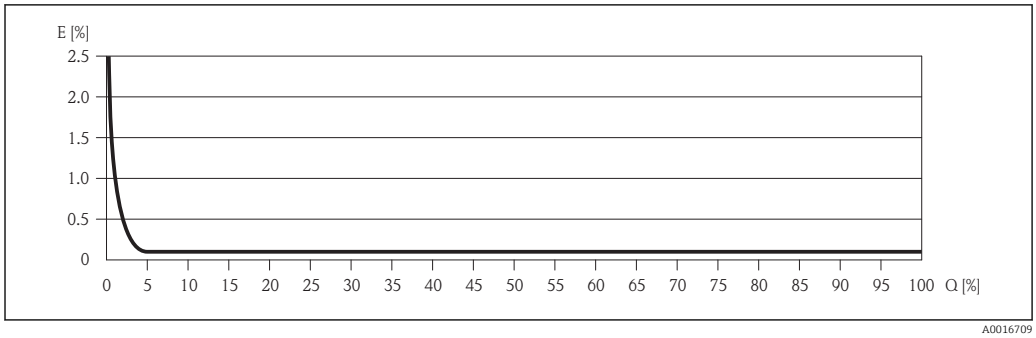

E *Error: Maximum measured error as % o.r. (example)*
Q *Flow rate as %*

Design fundamentals (→ 84)

Flow values

Flow values as turndown parameter depending on nominal diameter.

SI units

DN	1:1	1:10	1:20	1:50	1:100	1:500
[mm]	[kg/h]	[kg/h]	[kg/h]	[kg/h]	[kg/h]	[kg/h]
8	2 000	200	100	40	20	4
15	6 500	650	325	130	65	13
25	18 000	1 800	900	360	180	36
40	45 000	4 500	2 250	900	450	90
50	70 000	7 000	3 500	1 400	700	140

US units

DN	1:1	1:10	1:20	1:50	1:100	1:500
[inch]	[lb/min]	[lb/min]	[lb/min]	[lb/min]	[lb/min]	[lb/min]
⅜	73.5	7.35	3.675	1.47	0.735	0.147
½	238	23.8	11.9	4.76	2.38	476
1	660	66	33	13.2	6.6	1.32
1½	1 650	165	825	33	16.5	3.3
2	2 570	257	1'285	51.4	25.7	5.14

Repeatability

o.r. = of reading; 1 g/cm^3 = 1 kg/l; T = medium temperature

Mass flow and volume flow (liquids)
±0.05 % o.r.

Mass flow (gases)
±0.25 % o.r.

Design fundamentals (→ 84)

Density (liquids)
±0.00025 g/cm³

Temperature
±0.25 °C ± 0.0025 · T °C (±0.45 °F ± 0.0015 · (T−32) °F)

Response time

- The response time depends on the configuration (damping).
- Response time in the event of erratic changes in the measured variable (only mass flow): after 100 ms 95 % of the full scale value

Influence of medium temperature

Mass flow and volume flow
When there is a difference between the temperature for zero point adjustment and the process temperature, the typical measured error of the sensor is ±0.0002 % of the full scale value/°C (±0.0001 % of the full scale value/°F).

Density
When there is a difference between the density calibration temperature and the process temperature, the typical measured error of the sensor is
±0.0001 g/cm³ /°C (±0.00005 g/cm³ /°F). Field density calibration is possible.

Wide-range density specification (special density calibration)
If the process temperature is outside the valid range (→ 81) the measured error is ±0.0001 g/cm³ /°C (±0.00005 g/cm³ /°F)

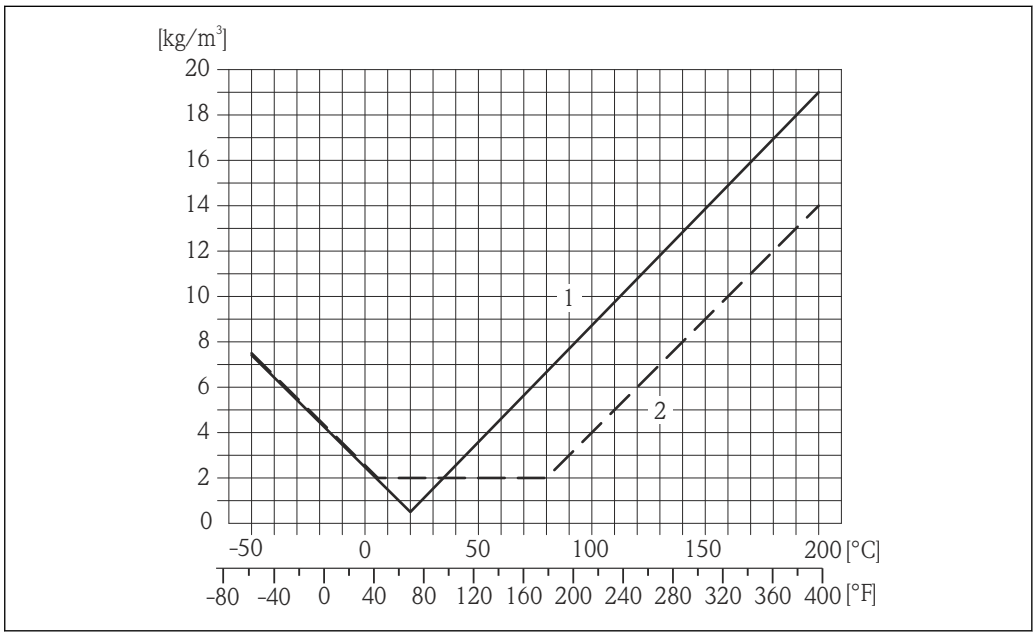

1 *Field density calibration, for example at +20 °C (+68 °F)*
2 *Special density calibration*

Temperature
±0.005 · T °C (± 0.005 · (T − 32) °F)

Influence of medium pressure

The table below shows the effect on accuracy of mass flow due to a difference between calibration pressure and process pressure.

o.r. = of reading

DN		[% o.r./bar]	[% o.r./psi]
[mm]	[in]		
8	⅜	−0.002	−0.0001
15	½	−0.006	−0.0004
25	1	−0.005	−0.0003
40	1½	−0.005	−0.0003
50	2	−0.005	−0.0003

Design fundamentals

o.r. = of reading, o.f.s. = of full scale value

Dependent on the flow:
- Flow in % o.f.s. ≥ (zero point stability : base accuracy in % o.r.) · 100
  - Maximum measured error in % o.r.: ±base accuracy in % o.r.
  - Repeatability in % o.r.: ±½ · base accuracy in % o.r.
- Flow in % o.f.s. < (zero point stability : base accuracy in % o.r.) · 100
  - Maximum measured error in % o.r.: ± (zero point stability : measured value) · 100
  - Repeatability in % o.r.: ±½ · (zero point stability : measured value) · 100

Base accuracy for	[% o.r.]
Mass flow, liquids	0.1
Volume flow, liquids	0.1
Mass flow, gases	0.5

16.7 Installation

"Mounting requirements" (→ 17)

16.8 Environment

Ambient temperature range

(→ 19)

Storage temperature

−40 to +80 °C (−40 to +176 °F), preferably at +20 °C (+68 °F)

Climate class

DIN EN 60068-2-38 (test Z/AD)

Degree of protection

Transmitter and sensor
- As standard: IP66/67, type 4X enclosure
- With the order code for "Sensor options", option **CM**: IP69K can also be ordered
- When housing is open: IP20, type 1 enclosure

Safety Barrier Promass 100
IP20

Shock resistance

As per IEC/EN 60068-2-31

Vibration resistance	Acceleration up to 1 g, 10 to 150 Hz, based on IEC/EN 60068-2-6
Interior cleaning	▪ SIP cleaning ▪ CIP cleaning
Electromagnetic compatibility (EMC)	▪ As per IEC/EN 61326 and NAMUR Recommendation 21 (NE 21) ▪ Complies with emission limits for industry as per EN 55011 (Class A) Details are provided in the Declaration of Conformity.

16.9 Process

Medium temperature range	**Sensor** ▪ −50 to +150 °C (−58 to +302 °F) ▪ −50 to +200 °C (−58 to +392 °F) with extended temperature (order code for "Measuring tube mat.", option TD, TG) **Seals** No internal seals
Medium density	0 to 5 000 kg/m³ (0 to 312 lb/cf)
Pressure-temperature ratings	An overview of the material load diagrams (pressure/temperature diagrams) for the process connections is provided in the "Technical Information" document.
Secondary containment pressure range	The sensor housing is filled with dry nitrogen and protects the electronics and mechanics inside.

DN		Secondary containment pressure range		Burst pressure	
[mm]	[in]	[bar]	[psi]	[bar]	[psi]
8	⅜	25	362	190	2755
15	½	25	362	175	2535
25	1	25	362	165	2930
40	1½	16	232	64	925
50	2	10	145	54	780

If there is a risk of measuring tube failure due to process characteristics, e.g. with corrosive process fluids, we recommend the use of sensors whose secondary containment is equipped with special pressure monitoring connections (order code for "Purge connection", option CH). With the help of these connections, the fluid collected in the secondary containment can be bled off in the event of tube failure. This is especially important in high-pressure gas applications. These connections can also be used for gas purging (gas detection).

Dimensions:

Flow limit	Select the nominal diameter by optimizing between the required flow range and permissible pressure loss.

For an overview of the measuring range full scale values, see the "Measuring range" section (→ 76)

- The minimum recommended full scale value is approx. 1/20 of the maximum full scale value
- In most applications, 20 to 50 % of the maximum full scale value can be considered ideal
- Select a lower full scale value for abrasive substances (such as liquids with entrained solids): flow velocity <1 m/s (<3 ft/s).
- For gas measurement the following rules apply:
  - The flow velocity in the measuring tubes should not exceed half the sonic velocity (0.5 Mach).
  - The maximum mass flow depends on the density of the gas: formula (→ 77)

Pressure loss

To calculate the pressure loss, use the *Applicator* sizing tool (→ 91)

16.10 Mechanical construction

Design, dimensions

For the dimensions and installation lengths of the device, see the "Technical Information" document, "Mechanical construction" section

Weight

Compact version

Weight in SI units

All values (weight) refer to devices with EN/DIN PN 40 flanges. Weight information in [kg].

DN [mm]	Weight [kg]
8	11
15	13
25	19
40	41
50	78

Weight in US units

All values (weight) refer to devices with EN/DIN PN 40 flanges. Weight information in [lbs].

DN [in]	Weight [lbs]
3/8	24
½	29
1	42
1½	90
2	172

Safety Barrier Promass 100

49 g (25 ounce)

Materials

Transmitter housing

- Order code for "Housing", option **A** "Compact, coated alu":
  Coated aluminum AlSi10Mg
- Order code for "Housing", option **B** "Compact, hygienic, stainless":
  Hygienic version, stainless steel 1.4301 (304)
- Order code for "Housing", option **C** "Ultra compact hygienic, stainless":
  Hygienic version, stainless steel 1.4301 (304)

Cable entries

Order code for "Housing", option A "Compact, coated alu"

The various cable entries are suitable for hazardous and non-hazardous areas.

Electrical connection	Material
Cable gland M20 × 1.5	Nickel-plated brass
Thread G ½", via adapter	
Thread NPT ½", via adapter	

Order code for "Housing", option B "Compact, hygienic, stainless"

The various cable entries are suitable for hazardous and non-hazardous areas.

Electrical connection	Material
Cable gland M20 × 1.5	Stainless steel 1.4404 (316L)
Thread G ½", via adapter	
Thread NPT ½", via adapter	

Device plug

Electrical connection	Material
Plug M12x1	▪ Socket: Stainless steel 1.4404 (316L) ▪ Contact housing: Polyamide ▪ Contacts: Gold-plated brass

Sensor housing

- Acid and alkali-resistant outer surface
- Stainless steel 1.4301 (304)

Measuring tubes

Stainless steel 1.4435 (316L)

Surface quality (wetted parts)
- Ra_{max} = 0.76 µm (32 µin) mechanically polished
- Ra_{max} = 0.38 µm (16 µin) electropolished
- Delta ferrite <1%

Process connections

- Flanges according to EN 1092-1 (DIN 2501) / according to ASME B16.5 / according to JIS B2220:
  Stainless steel 1.4404 (316/316L)
- All other process connections:
  Stainless steel 1.4435 (316L)

List of all available process connections (→ 89)

Seals

Welded process connections without internal seals

Safety Barrier Promass 100

Housing: Polyamide

Process connections

- Flanges:
  - EN 1092-1 (DIN 2501)
  - ASME B16.5
  - JIS B2220
- Tri-Clamp (OD tubes)
- Clamp with aseptic connection
  DIN 11864-3, Form A
- Clamp with compression fitting
  - DIN 32676
  - ISO 2852
  - BioConnect
- Clamp (eccentric) :
  - Tri-Clamp
  - DIN 11864-3 Form A
  - DIN 32676
  - ISO 2852
  - Neumo BioConnect
  - BBS
- Threaded hygienic connection:
  - DIN 11851
  - SMS 1145
  - ISO 2853
  - DIN 11864-1 Form A
- Flange:
  DIN 11864-2 Form A

For information on the materials of the process connections (→ 87)

16.11 Operability

Remote operation

Service interface (CDI)

Operation of the measuring device with the service interface (CDI) via:
"FieldCare" operating tool with COM DTM "CDI Communication FXA291" via Commubox FXA291

Languages

Can be operated in the following languages:
Via "FieldCare" operating tool:
English, German, French, Spanish, Italian, Chinese, Japanese

16.12 Certificates and approvals

CE mark

The measuring system is in conformity with the statutory requirements of the applicable EC Directives. These are listed in the corresponding EC Declaration of Conformity along with the standards applied.

Endress+Hauser confirms successful testing of the device by affixing to it the CE mark.

C-Tick symbol

The measuring system meets the EMC requirements of the "Australian Communications and Media Authority (ACMA)".

Ex approval	The devices are certified for use in hazardous areas and the relevant safety instructions are provided in the separate "Safety Instructions" (XA) document. Reference is made to this document on the nameplate.
Hygienic compatibility	▪ 3A approval ▪ EHEDG-tested
Modbus RS485 certification	The measuring device meets all the requirements of the MODBUS/TCP conformity test and has the "MODBUS/TCP Conformance Test Policy, Version 2.0". The measuring device has successfully passed all the test procedures carried out and is certified by the “MODBUS/TCP Conformance Test Laboratory” of the University of Michigan.
Pressure Equipment Directive	▪ With the PED/G1/x (x = category) marking on the sensor nameplate, Endress+Hauser confirms compliance with the "Essential Safety Requirements" specified in Annex I of the Pressure Equipment Directive 97/23/EC. ▪ Devices not bearing this marking (PED) are designed and manufactured according to good engineering practice. They meet the requirements of Art.3 Section 3 of the Pressure Equipment Directive 97/23/EC. The range of application is indicated in tables 6 to 9 in Annex II of the Pressure Equipment Directive.
Other standards and guidelines	▪ EN 60529 Degrees of protection provided by enclosures (IP code) ▪ IEC/EN 60068-2-6 Environmental influences: Test procedure - Test Fc: vibrate (sinusoidal). ▪ IEC/EN 60068-2-31 Environmental influences: Test procedure - Test Ec: shocks due to rough handling, primarily for devices. ▪ EN 61010-1 Safety requirements for electrical equipment for measurement, control and laboratory use ▪ IEC/EN 61326 Emission in accordance with Class A requirements. Electromagnetic compatibility (EMC requirements) ▪ NAMUR NE 21 Electromagnetic compatibility (EMC) of industrial process and laboratory control equipment ▪ NAMUR NE 32 Data retention in the event of a power failure in field and control instruments with microprocessors ▪ NAMUR NE 43 Standardization of the signal level for the breakdown information of digital transmitters with analog output signal. ▪ NAMUR NE 53 Software of field devices and signal-processing devices with digital electronics ▪ NAMUR NE 80 The application of the pressure equipment directive to process control devices ▪ NAMUR NE 105 Specifications for integrating fieldbus devices in engineering tools for field devices ▪ NAMUR NE 107 Self-monitoring and diagnosis of field devices ▪ NAMUR NE 131 Requirements for field devices for standard applications ▪ NAMUR NE 132 Coriolis mass meter

16.13 Application packages

Many different application packages are available to enhance the functionality of the device. Such packages might be needed to address safety aspects or specific application requirements.

The application packages can be ordered from Endress+Hauser either directly with the device or subsequently. Detailed information on the order code in question is available from your local Endress+Hauser sales center or on the product page of the Endress+Hauser website: www.endress.com.

Heartbeat Technology

Package	Description
Heartbeat Verification +Monitoring	**Heartbeat Monitoring:** Continuously supplies monitoring data, which are characteristic of the measuring principle, for an external condition monitoring system. This makes it possible to: ▪ Draw conclusions - using these data and other information - about the impact the measuring application has on the measuring performance over time. ▪ Schedule servicing in time. ▪ Monitor the product quality, e.g. gas pockets. **Heartbeat Verification:** Makes it possible to check the device functionality on demand when the device is installed, without having to interrupt the process. ▪ Access via onsite operation or other interfaces (requires no on-site presence). ▪ Ideal solution for recurring device checks (SIL). ▪ End-to-end, traceable documentation of the verification results and verification report. ▪ Extension of calibration intervals.

Concentration

Package	Description
Concentration measurement and special density	**Calculation and outputting of fluid concentrations** Many applications use density as a key measured value for monitoring quality or controlling processes. The device measures the density of the fluid as standard and makes this value available to the control system. The "Special Density" application package offers high-precision density measurement over a wide density and temperature range particularly for applications subject to varying process conditions. With the help of the "Concentration Measurement" application package, the measured density is used to calculate other process parameters: ▪ Temperature-compensated density (reference density). ▪ Percentage mass of the individual substances in a two-phase fluid. (Concentration in %). ▪ Fluid concentration is output with special units (°Brix, °Baumé, °API, etc.) for standard applications. The measured values are output via the digital and analog outputs of the device.

16.14 Accessories

Overview of accessories available for order (→ 74)

16.15 Documentation

The following document types are available:
- On the CD-ROM supplied with the device
- In the Download Area of the Endress+Hauser Internet site: www.endress.com → Download

Standard documentation

Communication	Document type	Documentation code
- - - -	Brief Operating Instructions	KA01118D
- - - -	Technical Information	TI01036D

Supplementary device-dependent documentation

Document type	Contents	Documentation code
Safety Instructions	ATEX/IECEx Ex i	XA00159D
	ATEX/IECEx Ex nA	XA01029D
	cCSAus IS	XA00160D
Special documentation	Information on the Pressure Equipment Directive	SD00142D
Special documentation	Modbus RS485 Register Information	SD00154D
Special documentation	Concentration Measurement	SD01152D
Special documentation	Viscosity Measurement	SD01151D
Special documentation	Heartbeat Technology	SD01153D
Installation Instructions		Specified for each individual accessory (→ 74) Overview of accessories available for order (→ 74)

17 Appendix

17.1 Overview of the operating menu

The following table provides an overview of the entire operating menu structure with menus and parameters. The page reference indicates where a description of the parameter can be found in the manual.

Display/operat.	→		(→ 36)
Locking status			(→ 57)
	Operation	→	(→ 59)
	Control totalizer 1 to 3		(→ 59)
	Preset value 1 to 3		(→ 59)
	Reset all totalizers		(→ 59)
Setup	→		(→ 43)
	System units	→	(→ 43)
	Mass flow unit		
	Mass unit		
	Volume flow unit		
	Volume unit		
	Corrected volume flow unit		
	Corrected volume unit		
	Density unit		
	Reference density unit		
	Temperature unit		
	Pressure unit		
	Medium selection	→	(→ 46)
	Select medium		
	Select gas type		
	Reference sound velocity		
	Temperature coefficient sound velocity		
	Pressure compensation		
	Pressure value		
	External pressure		

Communication	→	(→ 📄 47)
Bus address		
Baud rate		
Data transfer mode		
Parity		
Byte order		
Assign diagnostic behavior		
Failure mode		
Low flow cut off	→	(→ 📄 49)
Assign process variable		
On value low flow cutoff		
Off value low flow cutoff		
Pressure shock suppression		
Partially filled pipe detection	→	(→ 📄 50)
Assign process variable		
Low value partial filled pipe detection		
High value partial filled pipe detection		
Response time part. filled pipe detect.		
Advanced setup	→	(→ 📄 51)
Enter access code		
Device tag		(→ 📄 51)
	Calculated values →	(→ 📄 51)
	Corrected volume flow calculation	
	External reference density	
	Fixed reference density	
	Reference temperature	
	Linear expansion coefficient	

	Square expansion coefficient		
	Sensor adjustment	→	(→ 52)
	Installation direction		
		Zero point adjustment →	
		Zero point adjustment control	
		Progress	
	Totalizer 1 to 3	→	(→ 53)
	Assign process variable		
	Mass unit		
	Volume unit		
	Corrected volume unit		
	Totalizer operation mode		
	Failure mode		
	Viscosity	→	(→ 92)
		Temperature compensation →	
		Calculation model	
		Reference temperature	
		Compensation coefficient X1	
		Compensation coefficient X1	
		Dynamic viscosity →	
		Dynamic viscosity unit	
		User dynamic viscosity text	
		User dynamic viscosity factor	
		User dynamic viscosity offset	
		Kinematic viscosity →	
		Kinematic viscosity unit	
		User kinematic viscosity text	

			User kinematic viscosity factor	
			User kinematic viscosity offset	
		Concentration		(→ 92)
		Concentration unit		
		User concentration text		
		User concentration factor		
		User concentration offset		
		A0 to A4		
		B1 to B3		
		Heartbeat Setup		(→ 92)
		Progress		
			Heartbeat Monitoring →	
			Activate monitoring	
Diagnostics →				(→ 67)
Actual diagnostics				
Timestamp				
Previous diagnostics				
Timestamp				
Operating time from restart				
Operating time				
	Diagnostic list →			(→ 67)
	Diagnostics 1 to 5			
	Timestamp			
	Event logbook →			(→ 68)
	Filter options			(→ 68)
	Device information →			(→ 69)
	Device tag			(→ 51)
	Serial number			
	Firmware version			
	Device name			

Order code			
Extended order code1 to 3			
ENP version			
Measured values	→		(→ 📄 57)
		Process variables →	(→ 📄 57)
		Mass flow	
		Volume flow	
		Corrected volume flow	
		Density	
		Reference density	
		Temperature	
		Pressure value	
		Dynamic viscosity	(→ 📄 92)
		Kinematic viscosity	(→ 📄 92)
		Temp. compensated dynamic viscosity	(→ 📄 92)
		Concentration	(→ 📄 92)
		Target mass flow	
		Carrier mass flow	
		Totalizer →	(→ 📄 53)
		Totalizer value1 to 3	
		Totalizer overflow1 to 3	
Simulation	→		(→ 📄 54)
Assign simulation process variable			
Value process variable			
Simulation device alarm			
Heartbeat	→		(→ 📄 92)
		Performing verification →	
		Year	
		Month	
		Day	

		Hour	
		AM/PM	
		Minute	
		Start verification	
		Progress	
		Status	
		Verification results →	
		Date/time	
		Verification ID	
		Operating time	
		Overall result	
		Sensor	
		Sensor integrity	
		Sensor electronic module	
		I/O module	
		Monitoring results →	
	Device reset →		(→ 🗎 69)
Expert →			(→ 🗎 36)
Locking status			(→ 🗎 57)
Access status tooling			(→ 🗎 55)
Enter access code			
	System →		
		Diagnostic behavior →	(→ 🗎 64)
		Alarm delay	
		Assign behavior of diagnostic no. 044	
		Assign behavior of diagnostic no. 46	
		Assign behavior of diagnostic no. 144	
		Assign behavior of diagnostic no. 192	
		Assign behavior of diagnostic no. 274	

	Assign behavior of diagnostic no. 392			
	Assign behavior of diagnostic no. 592			
	Assign behavior of diagnostic no. 832			
	Assign behavior of diagnostic no. 833			
	Assign behavior of diagnostic no. 834			
	Assign behavior of diagnostic no. 835			
	Assign behavior of diagnostic no. 912			
	Assign behavior of diagnostic no. 913			
	Assign behavior of diagnostic no. 944			
	Assign behavior of diagnostic no. 992			
	Management →			
	Device reset			
	Activate SW option			
	SW option overview			
	Permanent storage			
	Device tag			
Sensor →				(→ 📄 57)
	Measured values →			(→ 📄 57)
		Process variables →		(→ 📄 57)
		Mass flow		
		Volume flow		
		Corrected volume flow		
		Density		
		Reference density		
		Temperature		
		Pressure value		
		Dynamic viscosity		(→ 📄 92)

		Kinematic viscosity	(→ 🗎 92)
		Temp. compensated dynamic viscosity	(→ 🗎 92)
		Temp. compensated kinematic viscosity	(→ 🗎 92)
		Concentration	(→ 🗎 92)
		Target mass flow	
		Carrier mass flow	
		Totalizer →	(→ 🗎 58)
		Totalizer value1 to 3	
		Totalizer overflow1 to 3	
System units →			(→ 🗎 43)
Mass flow unit			
Mass unit			
Volume flow unit			
Volume unit			
Corrected volume flow unit			
Corrected volume unit			
Density unit			
Reference density unit			
Temperature unit			
Pressure unit			
Date/time format			
		User-specific units →	
		User mass text	
		User mass factor	
		User volume text	
		User volume factor	
		User corrected volume text	
		User corrected volume factor	
		User density text	

		User density offset	
		User density factor	
		User pressure text	
		User pressure offset	
		User pressure factor	
	Process param. →		
	Flow damping		
	Density damping		
	Flow override		
	Temperature damping		
		Low flow cut off →	(→ 📄 49)
		Assign process variable	
		On value low flow cutoff	
		Off value low flow cutoff	
		Pressure shock suppression	
		Partially filled pipe detection →	(→ 📄 50)
		Assign process variable	
		Low value partial filled pipe detection	
		High value partial filled pipe detection	
		Response time part. filled pipe detect.	
		Maximum damping partial filled pipe det.	
	Measuring mode →		(→ 📄 46)
	Select medium		
	Select gas type		
	Reference sound velocity		
	Temperature coefficient sound velocity		
	External compensation →		
	Pressure compensation		
	Pressure value		

- External pressure
- Temperature mode
- External temperature
- **Calculated values** → (→ 📄 51)
- Corrected volume flow calculation
- External reference density
- Fixed reference density
- Reference temperature
- Linear expansion coefficient
- Square expansion coefficient
- **Sensor adjustment** → (→ 📄 52)
- Installation direction
  - **Zero point adjustment** →
  - Zero point adjustment control
  - Progress
  - **Variable adjust** →
  - Mass flow offset
  - Mass flow factor
  - Volume flow offset
  - Volume flow factor
  - Corrected volume flow offset
  - Corrected volume flow factor
  - Density offset
  - Density factor
  - Reference density offset
  - Reference density factor
  - Temperature offset
  - Temperature factor

		Calibration →		
		Calibration factor		
		Zero point		
		Nominal diameter		
		C0 to 5		
		Testpoints →		
		Oscillation frequency 0 to 1		
		Frequency fluctuation0 to 1		
		Oscillation amplitude0 to 1		
		Oscillation damping0 to 1		
		Tube damping fluctuation0 to 1		
		Signal asymmetry		
		Electronic temperature		
		Carrier pipe temperature		
		Exciter current 0 to 1		
Communication →				(→ 📄 47)
		Modbus configuration →		
		Bus address		
		Baud rate		
		Data transfer mode		
		Parity		
		Byte order		
		Telegram delay		
		Assign diagnostic behavior		
		Failure mode		
		Interpreter mode		
			Modbus data map →	(→ 📄 40)
			Scan list register0 to 15	
			Measured values →	(→ 📄 57)

- **Process variables** → (→ 57)
  - Mass flow
  - Volume flow
  - Density
  - Temperature
  - Pressure value
- **Totalizer** → (→ 58)
  - Totalizer value1 to 2
- **System units** → (→ 43)
  - Mass flow unit
  - Mass unit
  - Volume flow unit
  - Volume unit
  - Density unit
  - Reference density unit
  - Temperature unit
  - Pressure unit
- **Modbus configuration** →
  - Bus address

Application →

- Reset all totalizers (→ 59)
- **Totalizer 1 to 3** →
  - Assign process variable
  - Mass unit
  - Volume flow unit
  - Corrected volume unit
  - Totalizer operation mode
  - Control totalizer 1 to 3
  - Preset value 1 to 3
  - Failure mode
- **Viscosity** → (→ 92)
  - Viscosity damping

- **Temperature compensation** →
  - Calculation model
  - Reference temperature
  - Compensation coefficient X1, X2
- **Dynamic viscosity** →
  - Dynamic viscosity unit
  - User dynamic viscosity text
  - User dynamic viscosity factor
  - User dynamic viscosity offset
- **Kinematic viscosity** →
  - Kinematic viscosity unit
  - User kinematic viscosity text
  - User kinematic viscosity factor
  - User kinematic viscosity offset

Concentration → (→ 92)

- Concentration damping
- Concentration unit
- User concentration text
- User concentration factor
- User concentration offset
- A0 to A1

Diagnostics →

- Actual diagnostics
- Timestamp
- Previous diagnostics
- Timestamp
- Operating time from restart

- Operating time
  - **Diagnostic list** →
    - Diagnostics 1 to 5
    - Timestamp
  - **Event logbook** →
    - Filter options
  - **Device information** →
    - Device tag
    - Serial number
    - Firmware version
    - Device name
    - Order code
    - Extended order code1 to 3
    - ENP version
    - Configuration counter
  - **Min/max values** →
    - Reset min/max values
    - **Main electronic temperature** →
      - Minimum value
      - Maximum value
    - **Medium temperature** →
      - Minimum value
      - Maximum value
    - **Carrier pipe temperature** →
      - Minimum value
      - Maximum value
    - **Oscillation frequency** →
      - Minimum value
      - Maximum value
    - **Torsion oscillation frequency** →

		Minimum value	
		Maximum value	
		Oscillation amplitude	→
		Minimum value	
		Maximum value	
		Torsion oscillation amplitude	→
		Minimum value	
		Maximum value	
		Oscillation damping	→
		Minimum value	
		Maximum value	
		Torsion oscillation damping	→
		Minimum value	
		Maximum value	
		Signal asymmetry	→
		Minimum value	
		Maximum value	
	Heartbeat →		(→ 📄 92)
		Performing verification	→
		Year	
		Month	
		Day	
		Hour	
		AM/PM	
		Minute	
		Start verification	
		Progress	
		Status	
		Verification results	→
		Date/time	
		Verification ID	

		Operating time	
		Overall result	
		Sensor	
		Sensor integrity	
		Sensor electronic module	
		I/O module	
		Heartbeat Monitoring →	
		Activate monitoring	
		Monitoring results →	
		Sensor integrity	
	Simulation →		(→ 📄 54)
	Assign simulation process variable		
	Value process variable		
	Simulation device alarm		

Index

A
Accuracy 81
Adapting the diagnostic behavior 64
Ambient temperature range 19
Application 8, 76
Application packages 91
Applicator 77
Approvals 89
Auto scan buffer
  see Modbus RS485 Modbus data map

C
C-Tick symbol 89
Cable entries
  Technical data 80
Cable entry
  Degree of protection 32
CE mark 9, 89
Certificates 89
Check
  Post-connection 33
  Post-installation 23
Checklist
  Post-connection check 33
  Post-installation check 23
CIP cleaning 85
Cleaning
  CIP cleaning 71
  Exterior cleaning 71
  Interior cleaning 71
  SIP cleaning 71
Climate class 84
Commissioning 43
  Advanced settings 51
  Configuring the measuring device 43
Configuring error response mode, Modbus RS485 . . . 64
Connecting cable 24
Connecting the measuring device 29
Connection
  see Electrical connection
Connection preparations 29
Connection tools 24
Current consumption 80

D
Declaration of Conformity 9
Degree of protection 32, 84
Design
  Measuring device 10
Design fundamentals
  Maximum measured error 84
  Repeatability 84
Designated use
  8
Device components 10
Device description files 39, 39
Device documentation
  Supplementary documentation 7
Device locking, status 57
Device name
  Sensor 13
  Transmitter 12
Device repair 72
Device revision 39
Device type ID 39
Diagnostic information
  Communication interface 63
  Design, description 63
  FieldCare 62
  Light emitting diodes 61
  Overview 65
  Remedial measures 65
Diagnostic list 67
DIP switch
  see Write protection switch
Disabling write protection 55
Display
  Current diagnostic event 67
  Previous diagnostic event 67
Display values
  For device info 70
  For locking status 57
  For process variables 52, 58, 58
  For the totalizer 59
Disposal 72
Document
  Function 5
  Symbols used 5
Document function 5
Down pipe 17

E
Electrical connection
  Commubox FXA291 37
  Degree of protection 32
  Measuring device 24
  Operating tools
    Via service interface (CDI) 37
Electromagnetic compatibility 85
Enabling write protection 55
Endress+Hauser services
  Maintenance 71
  Repair 72
Error messages
  see Diagnostic messages
Event history 68
Events list 68
Ex approval 90
Ex connection data 78
Extended order code
  Sensor 13
  Transmitter 12

Exterior cleaning . . . 71

F
Field of application
Residual risks . . . 9
FieldCare . . . 37
Device description file . . . 39
Establishing a connection . . . 37
Function . . . 37
User interface . . . 38
Filtering the event logbook . . . 68
Firmware
Release date . . . 39
Version . . . 39
Firmware history . . . 70
Flow direction . . . 18, 22
Flow limit . . . 85
Function check . . . 43
Function codes . . . 39
Functions
see Parameter

G
Galvanic isolation . . . 79

H
Hardware write protection . . . 55
Hygienic compatibility . . . 90

I
I/O electronics module . . . 10, 30
Identifying the measuring device . . . 12
Incoming acceptance . . . 11
Influence
Medium pressure . . . 83
Medium temperature . . . 83
Information on the document . . . 5
Inlet runs . . . 19
Input . . . 76
Inspection check
Received goods . . . 11
Installation . . . 17
Installation conditions
Down pipe . . . 17
Mounting location . . . 17
Orientation . . . 18
Sensor heating . . . 20
System pressure . . . 19
Thermal insulation . . . 19
Vibrations . . . 20
Installation dimensions . . . 19
Interior cleaning . . . 71, 85

L
Languages, operation options . . . 89
Low flow cut off . . . 78

M
Main electronics module . . . 10
Maintenance tasks . . . 71
Manufacturer ID . . . 39
Manufacturing date . . . 12, 13
Materials . . . 87
Maximum measured error . . . 81
Measured variables
see Process variables
Measuring and test equipment . . . 71
Measuring device
Configuration . . . 43
Conversion . . . 72
Design . . . 10
Disposal . . . 73
Integrating via HART protocol . . . 39
Mounting the sensor . . . 22
Preparing for electrical connection . . . 29
Preparing for mounting . . . 22
Removing . . . 72
Repair . . . 72
Measuring principle . . . 76
Measuring range
Calculation example for gas . . . 77
For gases . . . 77
For liquids . . . 76
Measuring range, recommended . . . 85
Measuring system . . . 76
Media . . . 8
Medium density . . . 85
Medium pressure
Influence . . . 83
Medium temperature
Influence . . . 83
Menus
For measuring device configuration . . . 43
For specific settings . . . 51
Modbus RS485
Configuring error response mode . . . 64
Diagnostic information . . . 63
Function codes . . . 39
Modbus data map . . . 40
Read access . . . 39
Reading out data . . . 41
Register addresses . . . 40
Register information . . . 40
Response time . . . 40
Scan list . . . 41
Write access . . . 39
Modbus RS485 certification . . . 90
Mounting dimensions
see Installation dimensions
Mounting location . . . 17
Mounting preparations . . . 22
Mounting requirements
Inlet and outlet runs . . . 19
Installation dimensions . . . 19
Mounting tools . . . 22

N
Nameplate
Safety Barrier Promass 100 . . . 14

Sensor . . . 13
Transmitter . . . 12

O

Operable flow range . . . 77
Operating menu
Menus, submenus . . . 35
Overview of menus with parameters . . . 93
Structure . . . 35
Submenus and user roles . . . 36
Operating philosophy . . . 36
Operation . . . 57
Operation options . . . 34, 34
Operational safety . . . 9
Order code . . . 12, 13
Orientation (vertical, horizontal) . . . 18
Outlet run
Peripheral device . . . 20
Outlet runs . . . 19
Output . . . 78
Output signal . . . 78
Overview
Operating menu . . . 93

P

Packaging disposal . . . 16
Parameter settings
For communication interface . . . 47
For low flow cut off . . . 49
For monitoring of the tube filling . . . 50
For selecting and setting the medium . . . 46
For sensor adjustment . . . 53
For system units . . . 44
For the operation . . . 60
For the tag name . . . 51
For the totalizer . . . 54
Performance characteristics . . . 81
Post-connection check (checklist) . . . 33
Post-installation check . . . 43
Post-installation check (checklist) . . . 23
Potential equalization . . . 80
Power consumption . . . 80
Power supply failure . . . 80
Pressure Equipment Directive . . . 90
Pressure loss . . . 86
Pressure range
Secondary containment . . . 85
Pressure-temperature ratings . . . 85
Process connections . . . 89
Process variables
Calculated . . . 76
Measured . . . 76
Product safety . . . 9
Protecting parameter settings . . . 55

R

Reading measured values . . . 57
Reading out diagnostic information, Modbus RS485 . . . 63
Recalibration . . . 71
Reference operating conditions . . . 81
Registered trademarks . . . 7
Remote operation . . . 89
Repair . . . 72
Notes . . . 72
Repair of a device . . . 72
Repeatability . . . 82
Replacement
Device components . . . 72
Requirements for personnel . . . 8
Response time . . . 83
Returning devices . . . 72

S

Safety . . . 8
Seals
Medium temperature range . . . 85
Sensor
Medium temperature range . . . 85
Mounting . . . 22
Sensor heating . . . 20
Serial number . . . 12, 13
Service interface (CDI) . . . 89
Settings
Adapting the measuring device to the process conditions . . . 59
Communication interface . . . 47
Device reset . . . 69
Device tag . . . 51
Low flow cut off . . . 49
Medium . . . 46
Partial filled pipe detection . . . 50
Resetting the totalizer . . . 59
Sensor adjustment . . . 52
Simulation . . . 54
System units . . . 43
Totalizer . . . 53
Totalizer reset . . . 59
Shock resistance . . . 84
Signal on alarm . . . 78
SIP cleaning . . . 85
Software release . . . 39
Spare part . . . 72
Spare parts . . . 72
Standards and guidelines . . . 90
Status signals . . . 63
Storage conditions . . . 15
Storage temperature . . . 15
Structure
Operating menu . . . 35
Submenu
Communication . . . 47
Device information . . . 69
Events list . . . 68
Low flow cut off . . . 49, 50
Operation . . . 60
Overview . . . 36
Process variables . . . 51, 57

Select medium 46
Sensor adjustment 53
System units 43
Totalizer 53, 58
Supply voltage 79
System design
Measuring system 76
see Measuring device design
System integration 39
System pressure 19

T

Technical data, overview 76
Temperature range
Medium temperature 85
Storage temperature 15
Terminal assignment 26, 30
Terminals 80
Thermal insulation 19
Tools
Electrical connection 24
Installation 22
Transport 15
Transmitter
Connecting the signal cables 30
Transporting the measuring device 15
Troubleshooting
General 61

U

Use of the measuring device
Borderline cases 8
Incorrect use 8
see Designated use
User roles 36

V

Version data for the device 39
Vibration resistance 85
Vibrations 20

W

W@M 71, 72
W@M Device Viewer 12, 72
Weight
SI units 87
Transport (notes) 15
US units 87
Workplace safety 9
Write protection
Via write protection switch 55
Write protection switch 55

www.addresses.endress.com

Endress+Hauser

People for Process Automation