ABSA
the pressure equipment safety authority

Celebrating 20 years
1995 – 2015

9410 - 20 Ave N.W.
Edmonton, Alberta, Canada T6N 0A4
Tel: (780) 437-9100 / Fax: (780) 437-7787

October 14, 2015

Attention: Roger Wenige
ENDRESS + HAUSER GMBH & CO KG
HAUPTSTRASSE 1
MAULBURG, 79689

The design submission, tracking number 2015-07114, originally received on September 30, 2015 was surveyed and accepted for registration as follows:

CRN : 0F10907.52 **Accepted on:** October 14, 2015

Reg Type: Addition to Acc. Fitting **Expiry Date:** May 11, 2026

Drawing No. : CRN RENEWAL As Noted

Fitting type: SENSORS.

The registration is conditional on your compliance with the following notes:

This registration is valid only for fittings fabricated at the location(s) covered by the QC certificate attached to the accepted AB-41 Statutory Declaration form. This registration is valid only until the indicated expiry date only if the Manufacturer maintains a valid quality management system approved by an acceptable third-party agency until that date. Should the approval of the quality management system lapse before the expiry date indicated above, this registration shall become void.

This submission has been accepted for registration based review and acceptance of the design under CRN 0F10907.5R2 by another jurisdiction, in accordance with the Association of Chief Inspectors Policy on Reciprocal Recognition of Design Review for Fitting Design Registration."

An invoice covering survey and registration fees will be forwarded from our Revenue Accounts.

Enclosed are stamped prints for your reference.

Sincerely,

M. Grynchuk

GRYNCHUK, MILLA

AB-41 2005-02

Alberta
MUNICIPAL AFFAIRS

ABSA
the pressure equipment safety authority

Endress+Hauser
People for Process Automation

STATUTORY DECLARATION
Registration of Fittings

I, Michael Frei,

Quality Manager, responsible for the Integrated Quality Management System
(company title, e.g. vice president, plant manager, chief engineer) (must be in a position of authority)

of Endress+Hauser GmbH+Co.KG (Germany); Endress+Hauser Automation Instr. Co. Ltd (China); Endress+Hauser Automation Instr. Pvt. Ltd (India); Endress+Hauser Automation Instr. Inc. (USA)
(name of manufacturer)

located at 79689 Maulburg, Germany; 215021 Suzhou, P.R. China; Aurangabad-431136 India; Greenwood IN 46143, USA
(plant address)

do solemnly declare that the fittings listed hereunder, which are subject to the Safety Codes Act
(check one)

☒ comply with the requirements of ASME B31.3 (title of recognized North American Standard) which specifies the dimensions, materials of construction, pressure/temperature ratings and identification marking of the fittings, or

☐ are not covered by the provisions of a recognized North American standard and are therefore manufactured to comply with _____ as supported by the attached data which identifies the dimensions, materials of construction, pressure/temperature ratings and the basis for such ratings, and the marking of the fittings for identification.

I further declare that the manufacture of these fittings is controlled by a quality control program which has been verified by the following authority, IQNet and SQS as being suitable for the manufacture of these fittings to the stated standard. The fittings covered by this declaration, for which I seek registration, are Level limit switches for bulk solid

In support of this application, the following information, calculations and/or test data are attached:

Soliphant M FTM50, 51; Soliphant T FTM20, 21

SoR #960017940, Technical Description TD-CRN_SoliphantM_T_AMEND1, dwgs #960007246-A, #960007258

DECLARED before me at _____ in the _____ of _____

this _____ day of _____ (Month), _____ (Year)

(print) _____

(sign) _____
(A Commissioner for Oaths)

Michael Frei
(Signature of Applicant)

For Office Use Only

To the best of my knowledge and belief, the application meets the requirements of the Safety Codes Act and CSA Standard B51, Clause 4.2, and is accepted for registration in Category F

Registration Number: OF10907.52

Grynchuk
(For the Administrator/Chief Inspector of Alberta)

Date Registered: OCT 14 2015

Expiry Date: 2026-05-11

The information you provide is necessary only for the administration of the programs as required by the Alberta Safety Codes Act and Regulations in the Boiler Discipline.

see TSSA scope attached

ABSA
SAFETY CODES ACT - PROVINCE OF ALBERTA
REGISTRATION OF FITTINGS
14.08.2015
REGISTRATION NO. 0F 10907.5C
DWG. NO. or CAT. NO. SOR Scope 960017940
TYPE OF FITTINGS Sensors
OCT 14 2015
Date
INITIALS
MILLA GRYNCHUK, P.Eng.
DESIGN SURVEY ENGINEER
See Acceptance Letter for the comments and/or conditions of registration.

SoR Scope of Registration 960017940

Sensor type 1: **Soliphant M FTM50, FTM51**

Sensor type 2: **Soliphant T FTM20, FTM21**

Endress+Hauser
People for Process Automation

No.	Type of test specimen	type of instrument(1)	process connection	classification of material	temperature limits Tmin [°C]	Tmax [°C]	process pressure at Tmin in [bar]	Tmax in [bar]	test pressure po [bar]	verified through
1	Soliphant M	FTM 50/51	ASME flange	316 L (3)	-50	300	25	25	-	FEA report Soli-FTM50-51-ASME-flange.pdf
2	Soliphant M	FTM 50/51	1 ¼ NPT (Ø35)	316 L (3)	-50	300	25	25	200	proof test report ASME_SoliMFTM51_35mm (2)
3	Soliphant M	FTM 50/51	1 ½ NPT (Ø35)	316 L (3)	-50	300	25	25	200	proof test report ASME_SoliMFTM51_35mm
4	Soliphant M	FTM 50/51	1 ½ NPT (Ø42)	316 L (3)	-50	300	25	25	200	proof test report ASME_SoliMFTM51_42,4mm thread connection see ASME_SoliM51_35mm
			R 1 ½ (Ø42)	316 L (3)	-50	300	25	25	200	proof test report ASME_SoliMFTM51_42,4mm
5	Soliphant M	FTM 50/51	Clamp ISO 2852 DN40-51	316 L (3)	-50	121	~~11. Apr~~ 11.4	~~11. Apr~~ 11.4	-	FEA report LiqM-50-51-Clamp-DN40-51.pdf
10	Soliphant T	FTM 20/21	1 ½ NPT	316 L (4)	-50	150	25	25	200	proof test report ASME_SoliTFTM21_29mm
11	Soliphant T	FTM 20/21	1 ¼ NPT	316 L (4)	-50	150	25	25	200	proof test report ASME_SoliTFTM21_29mm (2)

(1) FTM 20/50 = compact version; FTM 21/51 = with extension tube

(2) 1 ½ NPT is worst case (same pitch, but greater diameter)

(3)	all threads and clamps:	316L (ASTM A479)
	flange:	316/316L (ASTM A182 Gr.F316/316L or A240 Gr.F316/316L)
	extension tube:	316L (ASTM A312)
	fork:	316L (ASTM A351 Gr.CF3M)
	rod:	316L (ASTM A276)
(4)	all threads:	316L (ASTM A479)
	sensor tube and extension tube:	316L (ASTM A312)

Manufacturing locations:

Endress+Hauser GmbH Co. KG
DE-79689 Maulburg, Germany

Endress+Hauser (USA) Automation Instrumentation Inc.
Greenwood, Indiana, 46143, USA

Endress+Hauser Suzhou Automation Instrumentation Co. Ltd.
215021 Suzhou, P.R. China

Endress+Hauser (India) Automation Instrumentation Pvt. Ltd.
Aurangabad-431136, India

THIS IS PART OF CRN 0F10907.5C
Technical Standards & Safety Authority
Boilers & Pressure Vessels
Safety Program

10 ASME thread
1 1/2 NPT
with extension tube

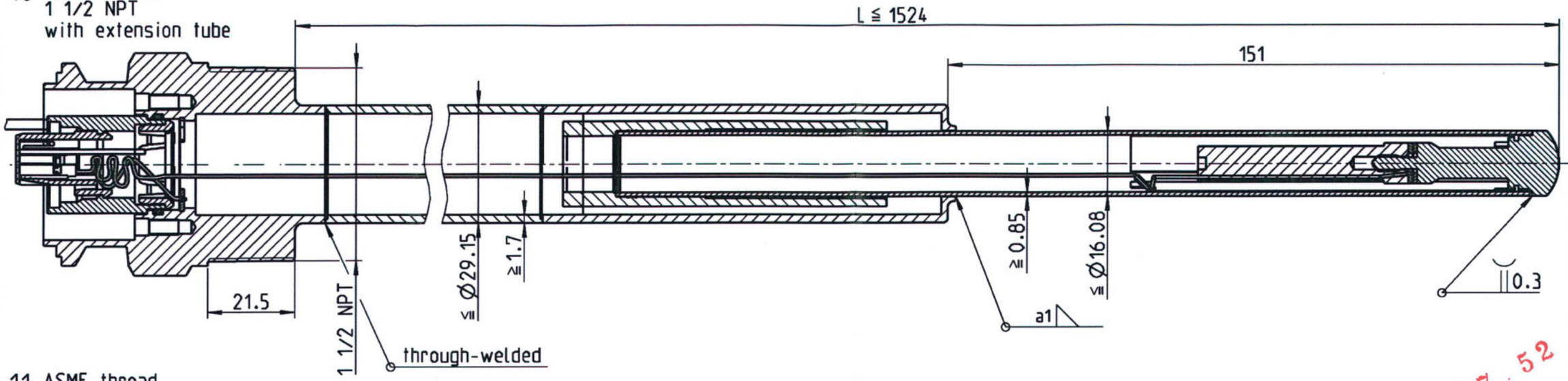

11 ASME thread
1 1/4 NPT
Compact version

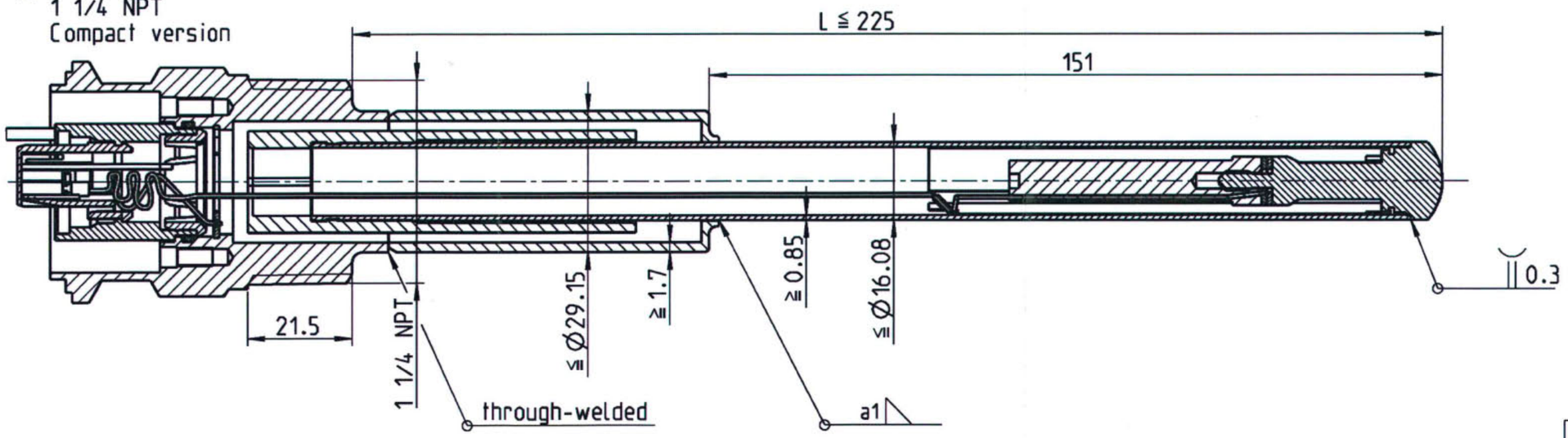

Agency controlled drawing.
No changes without prior
Agency approval.

Process connections: thread ASME: 1 1/4 NPT, 1 1/2 NPT

material: thread connections in 316L (A479)
sensor tube (Ø16) and extension tube (Ø29)
in 316L (A312)

MAWP: 25bar

Endress+Hauser, Endress+Hauser GmbH+Co. KG, D-79689 Maulburg, Germany	Schutzvermerk ISO 16016 beachten	Refer to protection notice ISO 16016		Toleranz / tolerance: -	
	Benennung / title: Swinging tube SPHT-T FTM20/21 Soliphant T CRN	Erzeuger-Sys. / creator sys.: Wildfire	letzt.Bearbei. / last editor	14.08.2015	JUBINT
		Format / format: DIN A3	geprüft / approved	14.08.2015	WENIGER
		Maßstab / scale: 1:1	gezeichnet / drawn	02.05.2005	GL
			entworfen / designed	02.05.2005	HI
		Dokument-Nr. / no. of document: 960007258 - -		6	Doku-Nr. alt / docu no. old
	Material / material: -	SAP-Material-Nr. / SAP material no.: -		Änderung / changes: -	kommt vor / appears

TOLERANCING DIMENSIONS ACC. TO ISO 8015 ISO 14405
GEOMETRICAL TOLERANCING DIN EN ISO 1101
SURFACE TEXTURE DIN EN ISO 1302
EDGES OF WORKING PARTS DIN ISO 13715

0F10907.52

FTM50/51

1 Flange/with extension tube

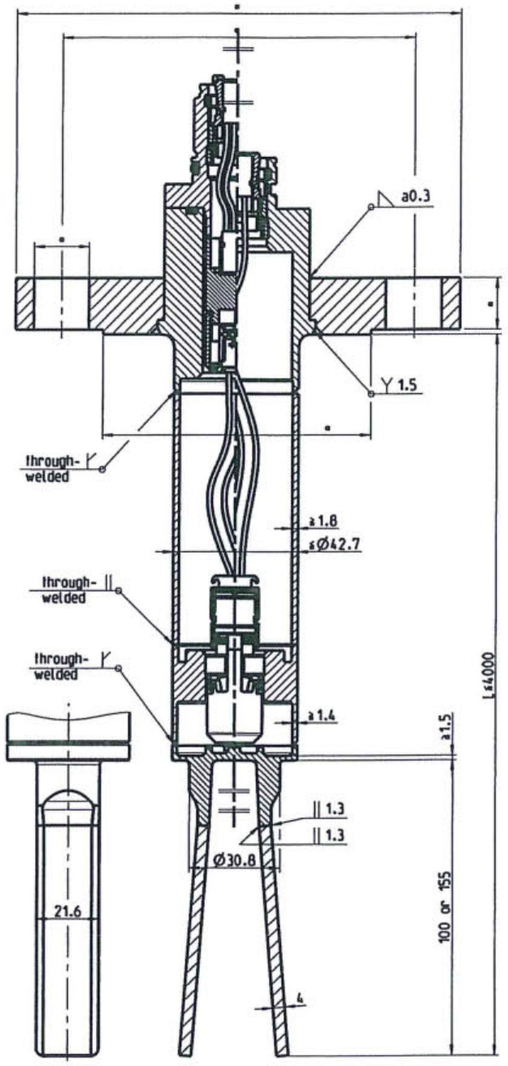

6 High Temperature Version

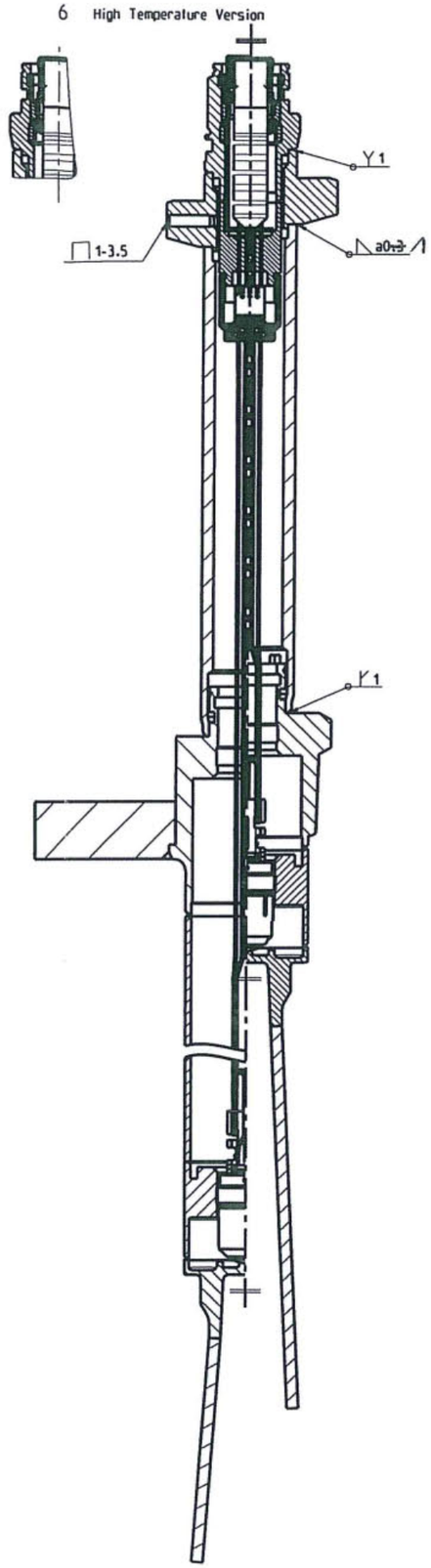

2 ASME thread 1 1/4 NPT Compact version Ø35

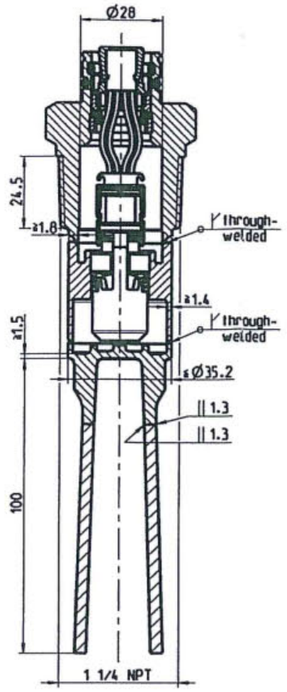

3 ASME thread 1 1/2 NPT Compact version Ø35

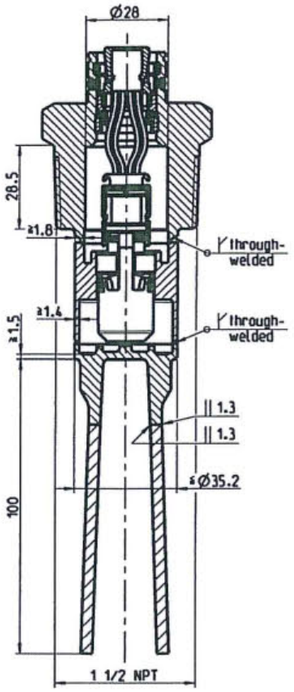

4 ASME thread 1 1/2 NPT or DIN2999 - R1 1/2 Compact version Ø42

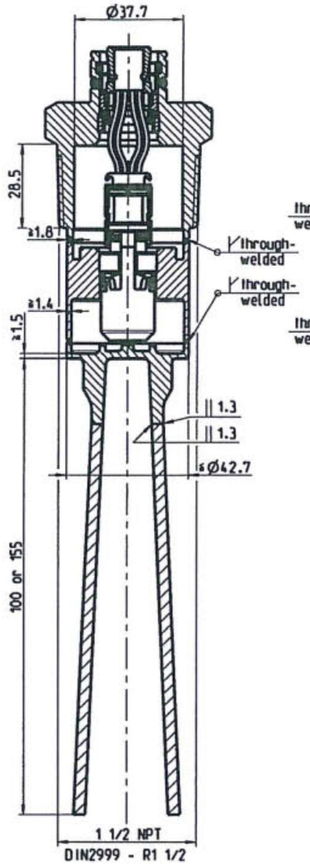

5 Clamp ISO2852 DN40-51 (2") Compact version Ø42

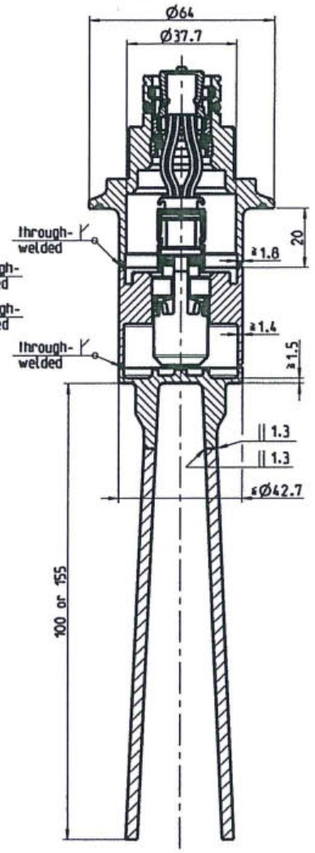

• Dimension according to ASME B16.5

All kinds of process connections in compact version or with extension tube.

Process connections: thread ASME: 1 1/4 NPT, 1 1/2 NPT; thread DIN2999: R1 1/2
Clamp ISO2852: DN40-51 (2")
ASME flange B16.5 with raised face RF
nominal diameter: 2", 2 1/2", 3", 3 1/2", 4", 6", 8"
class: 150, 300, 400, 600, 900 lb./sq.in

material: thread connections in 316L (A479)
Clamp ISO2852 in 316L (A479)
flanges in 316/316L (A182 Gr.F316/316L or A240 Gr.316/316L)
extension tube in 316L (A312)
fork in 316L (A351 Gr.CF3M)
rod in 316L (A276)

MAWP: up to 25bar depending on process connection

0F10907.52

Agency controlled drawing.
No changes without prior Agency approval.

Endress+Hauser GmbH+Co.KG Maulburg	Schutzvermerk ISO 16016 beachten	Refer to protection notice ISO 16016	Toleranz / tolerance: -
	Benennung / title: Soliphant M FTM50 / 51		Erstellt / created: 06.05.2007 BUELOWT; Geprüft / checked: 08.05.2007 LUTTERBECKB; Maßstab / scale: 1:1; gezeichnet / drawn: 18.04.2006 GL; entwortet / designed: 18.04.2006 KY
	Soliphant M FTM50 / 51		Dokument-Nr. / No. of document: 960007246 - A
	Material / material: -		SAP-Material-Nr. / SAP-Material-No.; Änderung / change: A; Ersetzt für / replaces